TUSB522P 3.3V 双通道 USB 3.1 GEN 1 转接驱动器、均衡器

1 特性

- 具有 3.3V 电源的 USB3.1 GEN1 5Gbps 双通道转接驱动器
- 超低功耗架构：
  - 有效：98 mA
  - U2、U3：1.2mA
  - 断开：265μA
  - 关断：60μA
- 出色的接收器均衡：
  - 3dB、6dB 和 9dB 三种增益设置（2.5GHz 时）
- 输出驱动器去加重功能，0dB、3.5dB 和 6dB 三种配置可供选择
- 自动 LFPS 去加重控制，满足 USB 3.1 认证要求
- 无主机或器件端要求
- 支持热插拔
- 工业温度范围：-40°C 至 85°C TUSB522PI
- 商用温度范围：0°C 至 70°C TUSB522P

2 应用

- 手机
- 平板电脑
- 笔记本电脑
- 台式机
- 扩展坞
- 背板和有源电缆

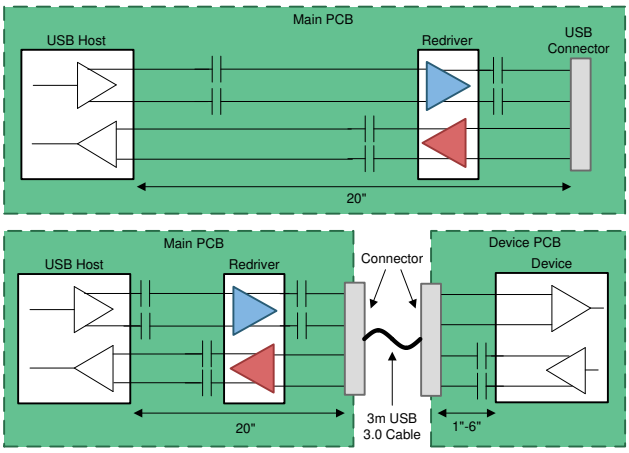

3 说明

TUSB522P 是一款支持 5Gbps 数据传输速率的第四代双通道单路 USB 3.1 GEN 1 转接驱动器和信号调节器。该器件采用超低功耗架构，在由 3.3V 电源供电运行时功耗非常低。转接驱动器还支持 USB 3.1 低功耗模式，可进一步降低空闲状态下的功耗。

双通道能力使得该系统能够在发送和接收数据路径上保持信号的完整性。接收器均衡有三种增益设置，用以克服插入损耗和码间串扰造成的通道性能退化。这些设置由 EQ 引脚控制。为了补偿传输线路损耗，输出驱动器还支持使用引脚 DE 配置去加重功能。此外，自动 LFPS 去加重控制有助于实现与 USB 3.1 完全兼容。这些设置使得 USB 3.1 第 1 代路径中的 TUSB522P 能够达到最佳性能，并延长信号传输距离以及实现灵活安置。

器件信息

器件型号	温度	封装(1)
TUSB522P	T_A = 0°C 至 70°C	RGE（VQFN，24）
TUSB522PI	T_A = -40°C 至 85°C	

(1) 如需了解所有可用封装，请参阅数据表末尾的可订购产品附录。

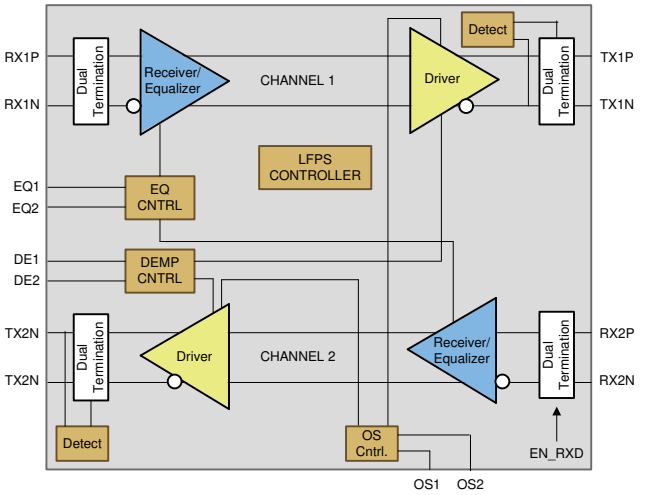

Copyright © 2016, Texas Instruments Incorporated

简化版原理图

本资源的原文使用英文撰写。 为方便起见，TI 提供了译文；由于翻译过程中可能使用了自动化工具，TI 不保证译文的准确性。 为确认准确性，请务必访问 ti.com 参考最新的英文版本（控制文档）。

Table of Contents

1 特性 1
2 应用 1
3 说明 1
4 Revision History 2
5 Pin Configuration and Functions 3
6 Specifications 5
6.1 Absolute Maximum Ratings 5
6.2 ESD Ratings 5
6.3 Recommended Operating Conditions 5
6.4 Thermal Information 6
6.5 Electrical Characteristics, Power Supply 6
6.6 Electrical Characteristics, DC 6
6.7 Electrical Characteristics, AC 7
7 Detailed Description 9
7.1 Overview 9
7.2 Functional Block Diagram 9
7.3 Feature Description 10
7.4 Device Functional Modes 11
8 Application and Implementation 12
8.1 Application Information 12
8.2 Typical Application 12
8.3 Power Supply Recommendations 15
8.4 Layout 15
9 Device and Documentation Support 17
9.1 接收文档更新通知 17
9.2 支持资源 17
9.3 Trademarks 17
9.4 静电放电警告 17
9.5 术语表 17
10 Mechanical, Packaging, and Orderable Information 17

4 Revision History

注：以前版本的页码可能与当前版本的页码不同

Changes from Revision D (May 2019) to Revision E (November 2023) — **Page**

- 更新了整个文档中的表格、图和交叉参考的编号格式 1
- 更新了 *器件信息* 表以包含环境温度 1
- In the *Pin Functions* table deleted "Note: When OS = low." for both DE1 and DE2. 3
- In *Recommended Operation Conditions*, changed $C_{AC\text{-}USB1}$ max from 200 nF to 265 nF. 5
- Reformat Table 7-1 for readability. 11
- Updated Figure 8-1 to include $C_{AC\text{-}USB1}$, $C_{AC\text{-}USB2}$, L_{AB}, L_{CD}, $L_{AC\text{-}CAP}$, L_{ESD}, R_{ESD}, and R_{RX}, ... 12
- Added comment that ac-capacitor should be placed between ESD and USB receptacle when designing for short to VBUS protection 12
- Updated the *Design Parameters* table to include pre-channel and post-channel min/max limits 13
- Added the *ESD Protection* section 14

Changes from Revision C (May 2019) to Revision D (May 2019) — **Page**

- Changed pin 11 From: TX1N To: TX2N and pin 12 From: TX1P To: TX2P in Figure 8-2 13

Changes from Revision B (November 2017) to Revision C (May 2019) — **Page**

- Deleted the RGE0024F mechanical pages 17

Changes from Revision A (October 2016) to Revision B (November 2017) — **Page**

- Changed the values in the FOR OS = HIGH column of Table 7-1 to match FOR OS = LOW column. 11

Changes from Revision * (July 2016) to Revision A (October 2016) — **Page**

- 将器件从“预发布”更改为“量产” 1

Copyright © 2023 Texas Instruments Incorporated

5 Pin Configuration and Functions

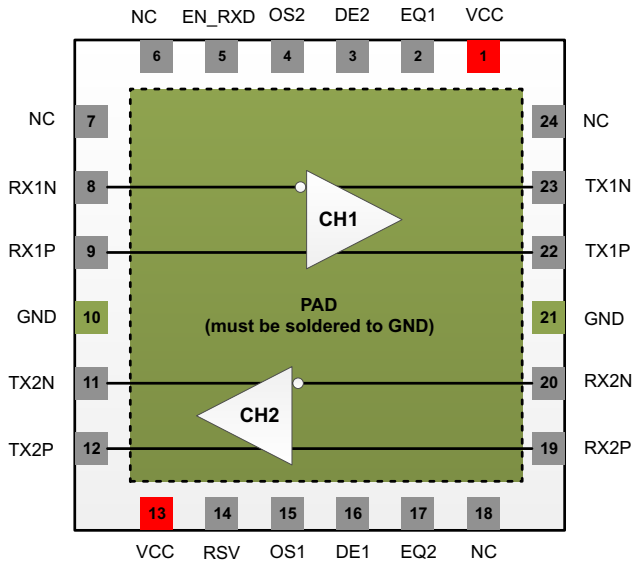

图 5-1. RGE Package, 24-Pin (VQFN) (Top View)

表 5-1. Pin Functions

PIN		I/O	DESCRIPTION
NAME	NO.		
RX1N	8	Differential I	Differential input for 5Gbps negative signal on Channel 1
RX1P	9	Differential I	Differential input for 5Gbps positive signal on Channel 1
TX1N	23	Differential O	Differential output for 5Gbps negative signal on Channel 1
TX1P	22	Differential O	Differential output for 5Gbps positive signal on Channel 1
RX2N	20	Differential I	Differential input for 5Gbps negative signal on Channel 2
RX2P	19	Differential I	Differential input for 5Gbps positive signal on Channel 2
TX2N	11	Differential O	Differential output for 5Gbps negative signal on Channel 2
TX2P	12	Differential O	Differential output for 5Gbps positive signal on Channel 2
EQ1	2	I, CMOS	Sets the receiver equalizer gain for Channel 1. 3-state input with integrated pull-up and pull-down resistors. EQ1 = Low = 3 dB EQ1 = Mid = 6 dB EQ1 = High = 9 dB
DE1	16	I, CMOS	Sets the output de-emphasis for Channel 1. 3-state input with integrated pull-up and pull-down resistors. DE1 = Low = 0 dB DE1 = Mid = -3.5 dB DE1 = High = -6.2 dB
OS1	15	I, CMOS	Sets the output swing (differential voltage amplitude) for Channel 1. 2-state input with an integrated pull down resistor. OS1 = Low = 0.9 mV OS1 = High = 1.1 mV
EQ2	17	I, CMOS	Sets the receiver equalizer gain for Channel 2. 3-state input with integrated pull-up and pull-down resistors. EQ2 = Low = 3 dB EQ2 = Mid = 6 dB EQ2 = High = 9 dB

Copyright © 2023 Texas Instruments Incorporated

表 5-1. Pin Functions（续）

PIN		I/O	DESCRIPTION
NAME	NO.		
DE2	3	I, CMOS	Sets the output de-emphasis for Channel 2. 3-state input with integrated pull-up and pull-down resistors. DE2 = Low = 0 dB DE2 = Mid = -3.5 dB DE2 = High = -6.2 dB
OS2	4	I, CMOS	Sets the output swing (differential voltage amplitude) for Channel 2. 2-state input with an integrated pull down resistor. OS2 = Low = 0.9 mV OS2 = High = 1.1 mV
EN_RXD	5	I, CMOS	Enable. The device has a 660-kΩ pulldown resistor. Device is active when EN_RXD = High. Drive actively high or install a pullup resistor (recommend 4.7 KΩ) for normal operation. Does reset state machine.
RSV	14	I, CMOS	Reserved. Can be left as no-connect.
VCC	1, 13	P	Positive power supply. Power supply is 3.3 V.
GND	10, 21, PAD	G	Ground. PAD must be connected to Ground. Pins 10, 21 can be connected to Ground or left unconnected.
NC	6, 7, 18, 24	—	No connection. These pins can be tied to any desired voltages including connecting them to GND.

Copyright © 2023 Texas Instruments Incorporated

6 Specifications

6.1 Absolute Maximum Ratings

over operating free-air temperature range (unless otherwise noted)[1]

		MIN	MAX	UNIT
Supply Voltage Range[2]	V_{CC}	–0.5	4	V
Voltage Range at any input or output terminal	Differential I/O	–0.5	1.5	V
	CMOS Inputs	–0.5	4	V
Junction temperature, T_J			105	°C
Storage temperature, T_{stg}		–65	150	°C

(1) Stresses beyond those listed under *Absolute Maximum Ratings* may cause permanent damage to the device. These are stress ratings only, which do not imply functional operation of the device at these or any other conditions beyond those indicated under *Recommended Operating Conditions*. Exposure to absolute-maximum-rated conditions for extended periods may affect device reliability.
(2) All voltage values are with respect to the GND terminals.

6.2 ESD Ratings

		VALUE	UNIT
$V_{(ESD)}$ Electrostatic discharge	Human-body model (HBM), per ANSI/ESDA/JEDEC JS-001[1]	±2000	V
	Charged-device model (CDM), per JEDEC specification JESD22-C101[2]	±500	

(1) JEDEC document JEP155 states that 500-V HBM allows safe manufacturing with a standard ESD control process.
(2) JEDEC document JEP157 states that 250-V CDM allows safe manufacturing with a standard ESD control process.

6.3 Recommended Operating Conditions

over operating free-air temperature range (unless otherwise noted)

			MIN	NOM	MAX	UNIT
V_{CC}	Main power supply		3	3.3	3.6	V
	Supply Ramp Requirement				100	ms
$V_{(PSN)}$	Supply Noise on V_{CC} Terminals				100	mV
T_A	Operating free-air temperature	TUSB522P	0		70	°C
		TUSB522PI	–40		85	°C
$C_{AC-USB1}$	External AC coupling capacitor		75	100	265	nF

6.4 Thermal Information

THERMAL METRIC[1]		TUSB522P RGE (VQFN) 24 PINS	UNIT
$R_{\theta JA}$	Junction-to-ambient thermal resistance	51.2	°C/W
$R_{\theta JC(top)}$	Junction-to-case (top) thermal resistance	55.9	°C/W
$R_{\theta JB}$	Junction-to-board thermal resistance	28.3	°C/W
ψ_{JT}	Junction-to-top characterization parameter	2.0	°C/W
ψ_{JB}	Junction-to-board characterization parameter	28.3	°C/W
$R_{\theta JC(bot)}$	Junction-to-case (bottom) thermal resistance	9.7	°C/W

(1) For more information about traditional and new thermal metrics, see the *Semiconductor and IC Package Thermal Metrics* application report.

6.5 Electrical Characteristics, Power Supply

over operating free-air temperature range (unless otherwise noted)

PARAMETER		TEST CONDITIONS	MIN	TYP	MAX	UNIT
$I_{CC(ACTIVE)}$	Average active current	Link in U0 with GEN1 data transmission. RSV, EQ cntrl pins = NC, EN_RXD = V_{CC}, k28.5 pattern at 5Gbps, V_{ID} = 1000 mVpp, OS = 900 mV and DE = 3.5 dB		98		mA
$I_{CC(U2U3)}$	Average current in U2/U3	Link in U2 or U3		1.2		mA
$I_{CC(NC)}$	Average current disconnect mode	Link in Disconnect mode		265		µA
$I_{CC(SHUTDOWN)}$	Average shutdown current	EN_RXD = L		60		µA

6.6 Electrical Characteristics, DC

over operating free-air temperature range (unless otherwise noted)

PARAMETER		TEST CONDITIONS	MIN	TYP	MAX	UNIT
3-State CMOS Inputs(EQ1/2, DE1/2)						
V_{IH}	High-level input voltage		V_{CC} x 0.8			V
V_{IM}	Mid-level input voltage			V_{CC} / 2.		V
V_{IL}	Low-level input voltage				V_{CC} x 0.2	V
V_F	Floating voltage	V_{IN} = High impedance		0.36 x V_{CC}		V
R_{PU}	Internal pull-up resistance			410		kΩ
R_{PD}	Internal pull-down resistance			240		kΩ
I_{IH}	High-level input current	V_{IN} = 3.6 V			26	µA
I_{IL}	Low-level input current	V_{IN} = GND, V_{CC} = 3.6.V	–26			µA
2-State CMOS Input (OS1/2, EN_RXD)						
V_{IH}	High-level input voltage		V_{CC} x 0.7			V
V_{IL}	Low-level input voltage				V_{CC} x 0.3	V
R_{PD}	Internal pull-down resistance			660		kΩ
I_{IH}	Low-level input current	V_{IN} = 3.6 V			25	µA
I_{IL}	Low-level input current	V_{IN} = GND, V_{CC} = 3.6.V	–10			µA

Copyright © 2023 Texas Instruments Incorporated

6.7 Electrical Characteristics, AC

over operating free-air temperature range (unless otherwise noted)

PARAMETER		TEST CONDITIONS	MIN	TYP	MAX	UNIT
Differential Receiver (RXP, RXN)						
$V_{(RX-DIFF-PP)}$	Input differential voltage swing.	AC-coupled differential peak-to-peak signal measured post CTLE through a reference channel	100		1200	mVpp
$V_{(RX-DC-CM)}$	Common-mode voltage bias in the receiver (DC)			0.7		V
$R_{(RX-DIFF-DC)}$	Differential input impedance (DC)	Present after a GEN1 device is detected on TXP/TXN	72		120	Ω
$R_{(RX-CM-DC)}$	Receiver DC Common Mode impedance		18		30	Ω
$Z_{(RX-HIGH-IMP-DC-POS)}$	Common-mode input impedance with termination disabled (DC)	Present when no GEN1 device is detected on TXP/TXN. Measured over the range of 0-500 mV with respect to GND.	25			kΩ
$V_{(RX-SIGNAL-DET-DIFF-PP)}$	Input Differential peak-to-peak Signal Detect Assert Level	At 5Gbps, no input channel loss clock pattern		85		mV
$V_{(RX-IDLE-DET-DIFF-PP)}$	Input Differential peak-to-peak Signal Detect De-assert Level			85		mV
$V_{(RX-LFPS-DET-DIFF-PP)}$	Low Frequency Periodic Signaling (LFPS) Detect Threshold	Below the minimum is squelched.	100		300	mV
$V_{(RX-CM-AC-P)}$	Peak RX AC common mode voltage	Measured at package pin			150	mV
$V_{(detect)}$	Voltage change to allow receiver detect	Positive voltage to sense receiver termination			600	mV
$C_{(RX-PARASITIC)}$	Voltage change to allow receiver detect	At 2.5 GHz	0.17	0.63	0.99	pF
$R_{L(RX-DIFF)}$	Differential Return Loss	50 MHz – 1.25 GHz at 90 Ω		–19		dB
		2.5 GHz at 90 Ω		–14		dB
$R_{L(RX-CM)}$	Common Mode Return Loss	50 MHz – 1.25 GHz at 90 Ω		–13		dB
Differential Transmitter (TXP, TXN)						
$V_{(TX-DIFF-PP)}$	Transmitter differential voltage swing (transition-bit)	OS Low, 0dB DE	0.8	0.9		Vpp
		OS High, 0dB DE		1.1	1.2	Vpp
$V_{(TX-DIFF-PP-LFPS)}$	LFPS differential voltage swing	OS Low, High	0.8		1.2	Vpp
$V_{(TX-DE-RATIO)}$	Transmitter differential voltage De-Emphasis ratio	DE = Low		0		dB
		DE = Floating		–3.5		dB
		DE = High		–6.2		dB
$V_{(TX-RCV-DETECT)}$	Amount of voltage change allowed during Receiver Detection				600	mV
$V_{(TX-CM-IDLE-DELTA)}$	Transmitter idle common-mode voltage change while in U2/U3 and not actively transmitting LFPS		–600		600	mV
$V_{(TX-DC-CM)}$	Common-mode voltage bias in the transmitter (DC)			0.7		V
$V_{(TX-CM-AC-PP-ACTIVE)}$	Tx AC Common-mode voltage active	Max mismatch from Txp + Txn for both time and amplitude			100	mVpp
$V_{(TX-IDLE-DIFF-AC-PP)}$	AC Electrical idle differential peak-to-peak output voltage	At package pins	0		10	mV
$V_{(TX-IDLE-DIFF-DC)}$	DC Electrical idle differential output voltage	At package pins after low pass filter to remove AC component	0		10	mV
$V_{(TX-CM-DC-ACTIVE-IDLE-DELTA)}$	Absolute DC common mode voltage between U1 and U0	At package pin			200	mV
$C_{(TX)}$	TX input capacitance to GND	At 2.5 GHz			1.25	pF
$R_{(TX-DIFF)}$	Differential impedance of the driver		72		120	Ω
$R_{(TX-CM)}$	Common-mode impedance of the driver	Measured with respect to AC ground over 0-500 mV	18		30	Ω
$I_{(TX-SHORT)}$	TX short circuit current	TX± shorted to GND			60	mA
$C_{(TX-PARASITIC)}$	TX input capacitance for return loss	Package Pins		0.63	1.02	F

6.7 Electrical Characteristics, AC（续）

over operating free-air temperature range (unless otherwise noted)

PARAMETER		TEST CONDITIONS	MIN	TYP	MAX	UNIT
$R_{L(RX-DIFF)}$	Differential Return Loss	50 MHz – 1.25 GHz at 90 Ω		12		dB
		1.25 – 2.5 GHz at 90 Ω		8		dB
$R_{L(RX-CM)}$	Common Mode Return Loss	50 MHz – 1.25 GHz at 90 Ω		13		dB
		1.25 – 2.5 GHz		11		dB
AC Characteristic						
Xtalk	Differential Cross Talk between TX and RX signal Pairs	At 2.5 GHz		–40		dB
$V_{(CM-TX-AC)}$	AC Common-mode voltage swing in active mode	Within U0 and within LFPS			100	mVpp
$V_{(TX-IDLE-DIFF-AC-PP)}$	Differential voltage swing during electrical idle	Tested with a high-pass filter	0		10	V
$R_{L(TX-DIFF)}$	Differential Return Loss	f = 50 MHz - 1.25 GHz		12		dB
		1.25 – 2.5 GHz		8		dB
$R_{L(TX-CM)}$	Common Mode Return Loss	f = 50 MHz - 1.25 GHz		16		dB
		1.25 – 2.5 GHz		13		dB
t_J	Total Jitter	Minimum input and output trace at 2.5 GHz, V_{CC} = 3.3 V		15		ps
$V_{(TX-CM-\Delta U1-U0)}$	Absolute delta of DC CM voltage during active and idle states				100	mV
$V_{(TX-IDLE-DIFF-DC)}$	DC Electrical idle differential output voltage	Voltage must be low pass filtered to remove any AC component	0		12	mV

Copyright © 2023 Texas Instruments Incorporated

7 Detailed Description

7.1 Overview

The TUSB522P is designed to overcome channel loss due to inter-symbol interference and crosstalk when 5Gbps USB3.1 GEN1 signals travel across a PCB or cable. The dual channel architecture is a one-chip, low-power solution, extending the possible channel length for transmit and receive data paths in an application. For a Host application, this enables the system to pass both transmitter compliance and receiver jitter tolerance tests.

The re-driver recovers incoming data by applying equalization that compensates for channel loss, and drives out signals with a high differential voltage. Each channel has a receiver equalizer with selectable gain settings. The equalization should be set based on the amount of insertion loss in channel 1 or 2 before the TUSB522P receivers. Likewise, the output drivers support configuration of De-Emphasis. Independent equalization and de-emphasis control for each channel can be set using EQ1/2 and DE1/2 pins.

The TUSB522P advanced state machine makes it transparent to hosts and devices. After power up, the TUSB522P periodically performs receiver detection on the TX pairs. If it detects a USB3.1 GEN1 receiver, the RX termination is enabled, and the TUSB522P is ready to re-drive.

The device ultra-low-power architecture operates at a 3.3-V power supply and achieves Enhanced performance. The automatic LFPS De-Emphasis control further enables the system to be USB3.1 compliant.

7.2 Functional Block Diagram

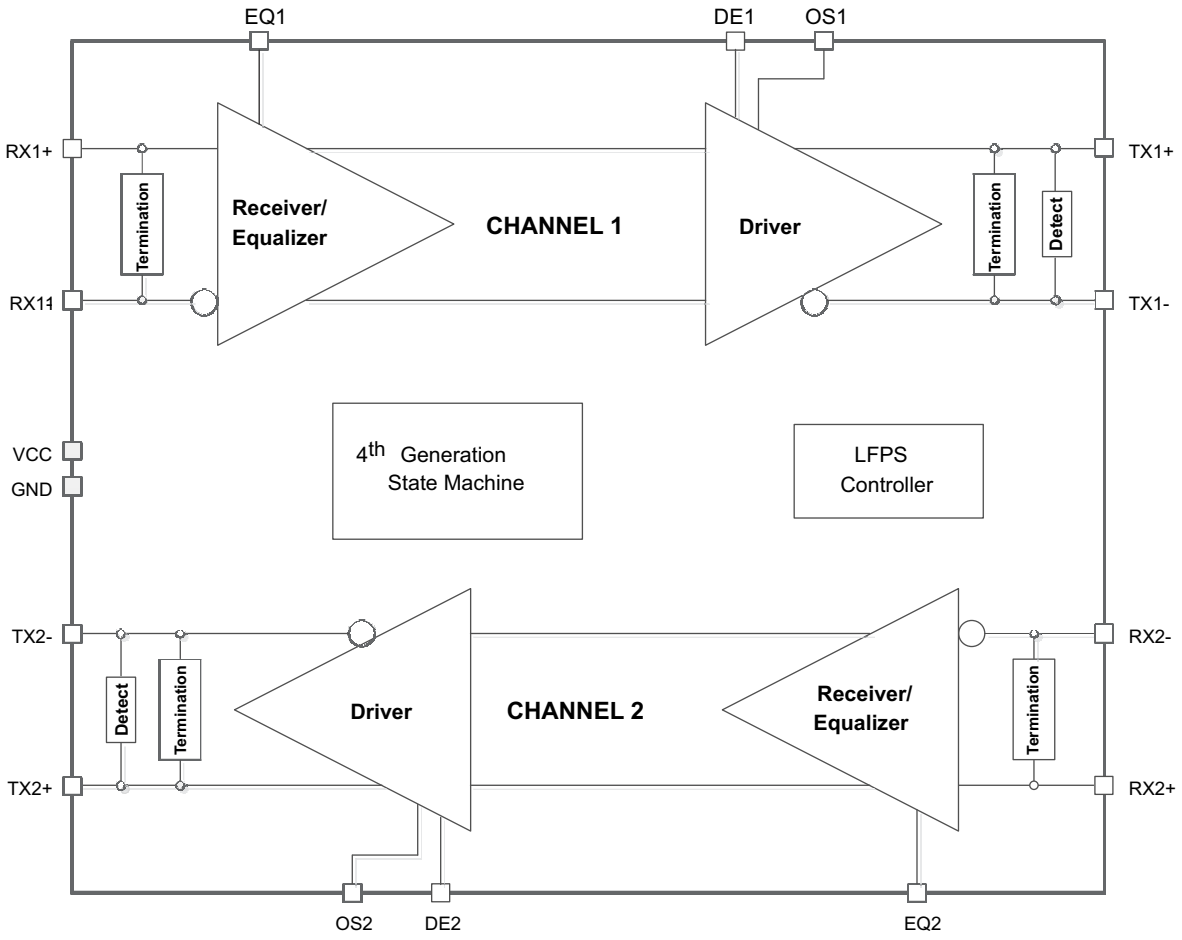

7.3 Feature Description

7.3.1 Receiver Equalization

The purpose of receiver equalization is to compensate for channel insertion loss and inter-symbol interference in the system before the input of the TUSB522P. The receiver overcomes these losses by attenuating the low frequency components of the signals with respect to the high frequency components. The proper gain setting should be selected to match the channel insertion loss before the input of the TUSB522P receivers. The gain setting may differ for channel 1 and channel 2.

7.3.2 De-Emphasis Control and Output Swing

The differential driver output provides selectable de-emphasis and output swing control in order to achieve USB3.1 compliance. The TUSB522P offers a unique way to adjust output de-emphasis and transmitter swing based on the OS1/2 and DE1/2 pins. The level of de-emphasis required in the system depends on the channel length after the output of the re-driver. The output swing and de-emphasis levels may differ for channel 1 and channel 2.

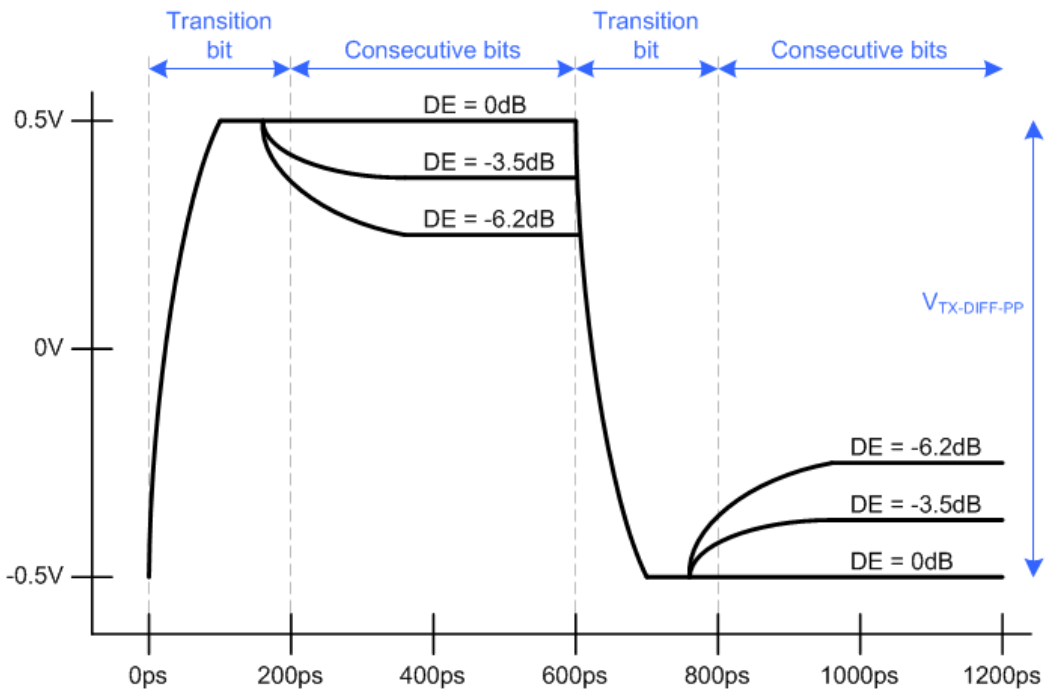

图 7-1. Transmitter Differential Voltage, OS = Floating

7.3.3 Automatic LFPS Detection

The TUSB522P features an intelligent low frequency periodic signaling (LFPS) controller. The controller senses the low frequency signals and automatically disables the driver de-emphasis, for full USB3.1 compliance.

Copyright © 2023 Texas Instruments Incorporated

7.4 Device Functional Modes

7.4.1 Device Configuration

表 7-1. Control Pin Settings (Typical Values)

PIN	DESCRIPTION	LOGIC STATE	TYP	UNITS
EQ1/EQ2	Receiver equalization amount	Low	3	dB
		Floating	6	dB
		High	9	dB
OS1/OS2	Transmit output swing amplitude for the transition bit	Low	0.9	Vpp
		High	1.1	Vpp
DE1/DE2	Transmit de-emphasis amount	Low	0	dB
		Floating	– 3.5	dB
		High	– 6.2	dB

7.4.2 Power Modes

The TUSB522P has 3 primary power modes:

7.4.2.1 U0 Mode (Active Power Mode)

During active power mode, U0, the device is transmitting USB SS data or USB LFPS signaling. The U0 mode is the highest power state of the TUSB522P. Anytime super-speed traffic is being received, the TUSB522P remains in this mode.

7.4.2.2 U2/U3 (Low Power Mode)

While in this mode, the TUSB522P periodically performs far-end receiver detection.

7.4.2.3 Disconnect Mode - RX Detect

In this state, the TUSB522P periodically checks for far-end receiver termination on both TX. Upon detection of the far-end receiver’s termination on both ports, the TUSB522P will transition to U0 mode.

7.4.2.4 Shutdown Mode

Shutdown mode is entered when the EN_RXD pin is driven low. This is lowest power setting for the device.

8 Application and Implementation

备注

以下应用部分中的信息不属于 TI 器件规格的范围，TI 不担保其准确性和完整性。TI 的客 户应负责确定器件是否适用于其应用。客户应验证并测试其设计，以确保系统功能。

8.1 Application Information

The TUSB522P is a dual-channel single-lane re-driver and signal conditioner designed to compensate for ISI jitter caused by attenuation through passive mediums such as traces or cables. The TUSB522P has two independent channels to allow optimization in both upstream and downstream directions through three EQ and six De-Emphasis settings.

8.2 Typical Application

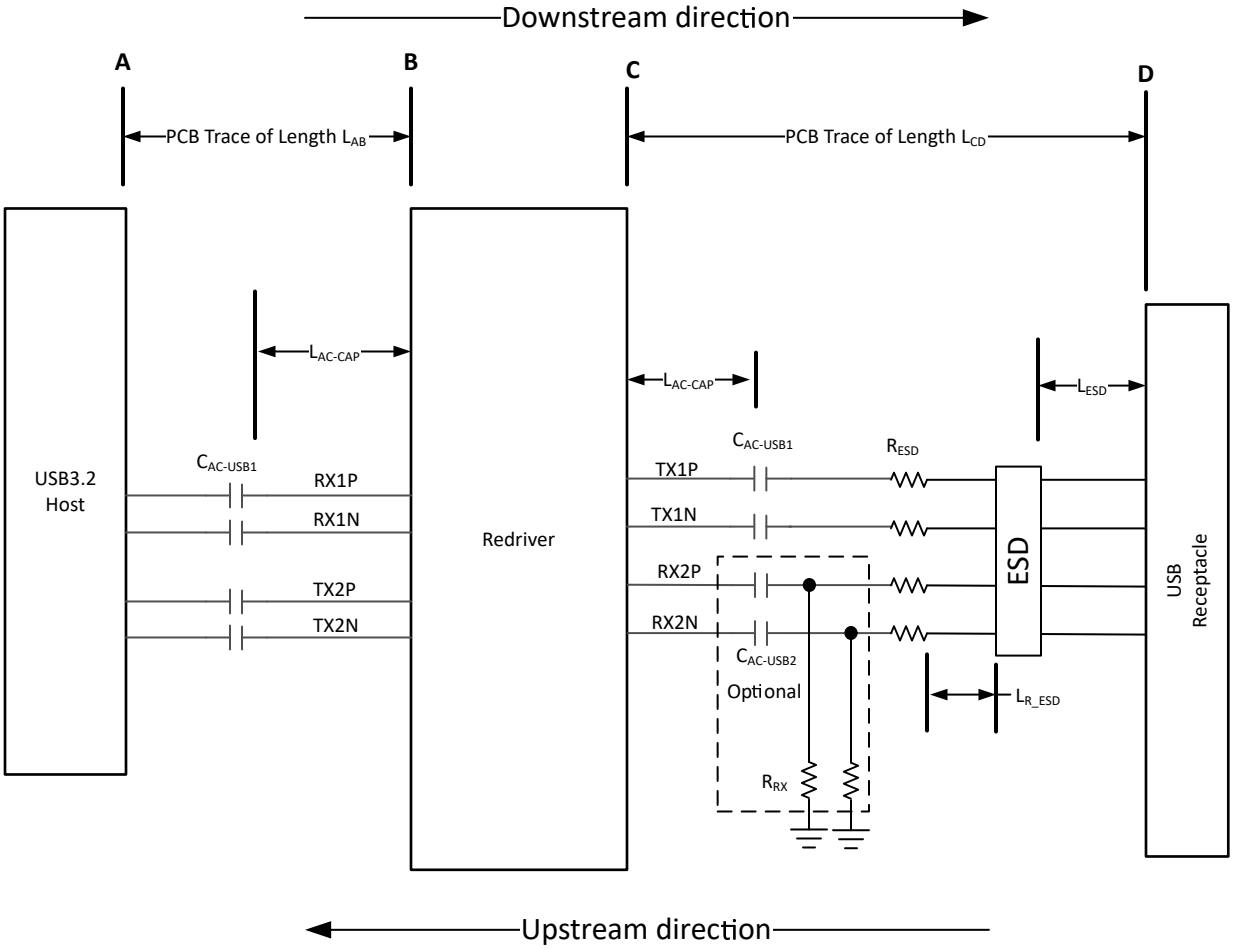

图 8-1. Embedded Host Application

The $C_{AC-USB1}$ and $C_{AC-USB2}$ should be placed between ESD and USB receptacle for systems designing for short to VBUS protection.

Copyright © 2023 Texas Instruments Incorporated

8.2.1 Design Requirements

For this design example, use the parameters provided in 表 8-1.

表 8-1. Design Parameters

PARAMETER	VALUE
Pre-channel A to B PCB trace length[(1)], L_{AB}.	1 inches ≤ L_{AB} ≤ 20 inches
Post-channel C to D PCB trace length[(1)], L_{CD}.	≤ 6 inches
Minimum distance of the AC capacitors from TUSB522P, $L_{AC\text{-}CAP}$	0.25 inches
Maximum distance of ESD component from the USB receptacle, L_{ESD}	0.6 inches
Maximum distance of series resistor (R_{ESD}) from ESD component, L_{R_ESD}.	0.25 inches
$C_{AC\text{-}USB1}$ AC-coupling capacitor (75 nF to 265 nF)	100 nF
$C_{AC\text{-}USB2}$ AC-coupling capacitor (297 nF to 363 nF)	Options: • RX1 or RX2 are DC-coupled to USB receptacle • 330 nF AC-couple with R_{RX} resistor
Optional R_{RX} resistor (220-kΩ ± 5%)	Not used
Optional R_{ESD} (0-Ω to 2.2-Ω)	Not used
V_{CC} supply (3-V to 3.6-V)	3.3-V
EQ1 for RX1P/N (3, 6, or 9dB)	9 dB (EQ1 = High)
De-Emphasis 2 for TX2P/N (0, -3.5, and - 6.2 dB)	-6.2 dB (OS2 = Low, DE2 = High)
EQ2 for RX2P/N (3, 6, or 9 dB)	6 dB (EQ2 = Floating)
De-Emphasis 1 for TX1P/N (0, -3.5, and -6.2 dB)	-3.5 dB (OS1 = Low, DE1 = Floating)
Output Swing 1 (0.9 or 1.1 Vppd)	900 mV (OS1 = Low)
Output Swing 2 (0.9 or 1.1 Vppd)	900 mV (OS2 = Low)

(1) Maximum trace length assumes an insertion loss of 0.2 dB/inch/GHz. If insertion loss is more than 0.2 dB/inch/GHz, then maximum trace length must be reduced accordingly.

8.2.2 Detailed Design Procedure

The TUSB522P differential receivers and transmitters have internal BIAS and termination. Due to this, the TUSB522P must be connected to the USB Host and receptacle through ac-coupling capacitors. In this example, as depicted in 图 8-2, 100 nF capacitors are placed on TX2P, TX2N, RX1P, RX1N, TX1P and TX1N. No ac-coupling capacitors are placed on the RX2P and RX2N pins because it is assumed the device downstream of the TUSB522P will have ac-coupling capacitors on its transmitter as defined by the USB 3.1 specification. The system designer may desire to support short to VBUS protection. If this is the case, then a 330 nF ac-coupling capacitor should be placed on RX2P/N pins.

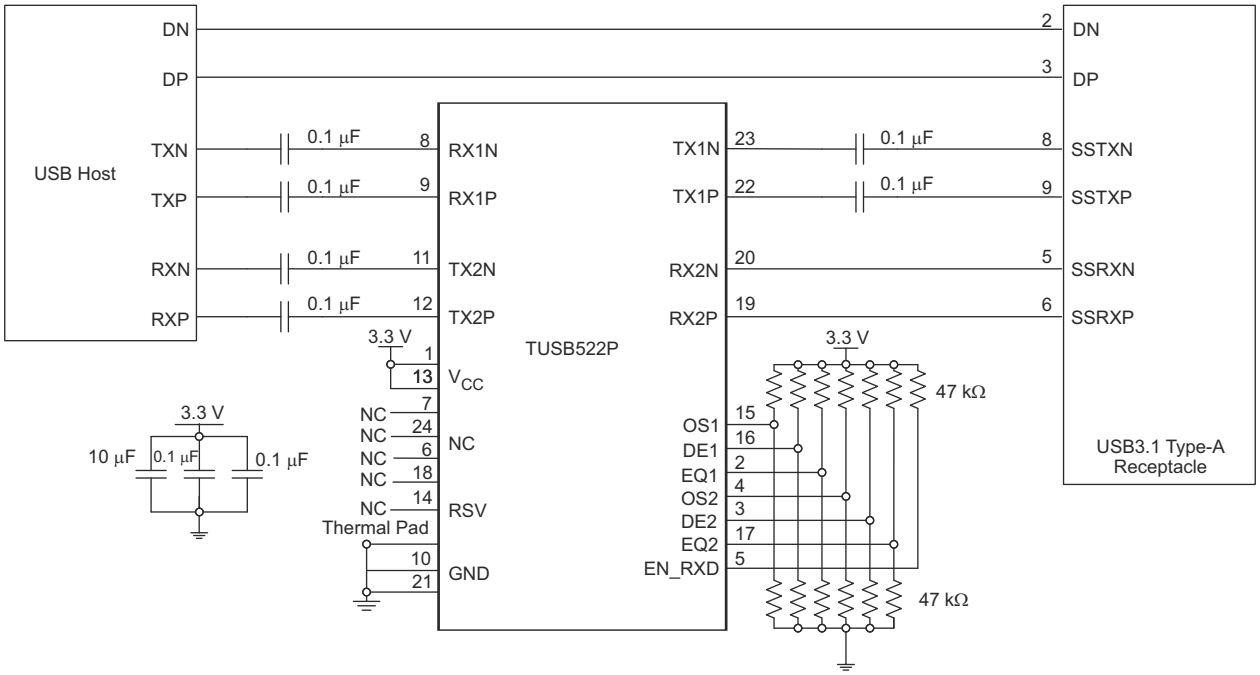

图 8-2. Embedded Host Application Schematic

8.2.2.1 ESD Protection

It may be necessary to incorporate an ESD component to protect the TUSB522P from electrostatic discharge (ESD). It is recommended that the ESD protection component has working peak voltage of ⩾ 1.3 V, a breakdown voltage of ⩾ 2.3 V, and a clamp voltage of ⩽ 4.0 V. A clamp voltage greater than 4.0 V may require a R_{ESD} on each differential pin. The ESD component should be placed near the USB connector.

表 8-2. Recommended ESD Protection Component

Manufacturer	Part Number	Required R_{ESD} to pass IEC 61000-4-2 Contact ±8-kV
Nexperia	PUSB3FR4	2.2-Ω
Nexperia	PESD2V8Y1BSF	2.2-Ω

Copyright © 2023 Texas Instruments Incorporated

8.2.3 Application Curves

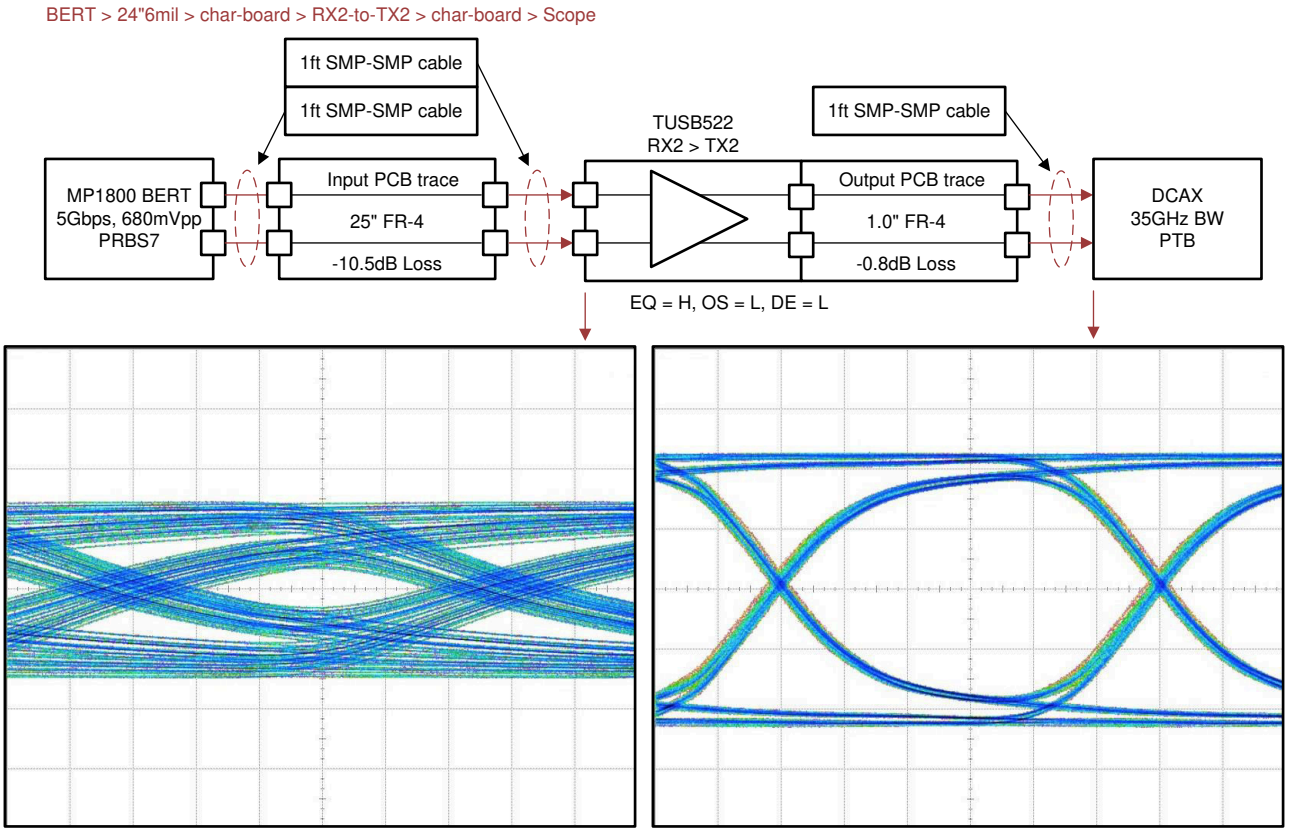

8.3 Power Supply Recommendations

The TUSB522P is designed to operate with a 3.3-V power supply. Levels above those listed in the *Absolute Ratings* table should not be used. If using a higher voltage system power supply, a voltage regulator can be used to step down to 3.3 V. Decoupling capacitors should be used to reduce noise and improve power supply integrity. A 0.1-µF capacitor should be used on each power pin.

8.4 Layout

8.4.1 Layout Guidelines

- RXP/N and TXP/N pairs should be routed with controlled 90-Ω differential impedance (±15%).
- Keep away from other high speed signals.
- Intra-pair routing should be kept to within 2mils.
- Length matching should be near the location of mismatch.
- Each pair should be separated at least by 3 times the signal trace width.
- The use of bends in differential traces should be kept to a minimum. When bends are used, the number of left and right bends should be as equal as possible and the angle of the bend should be ⩾ 135 degrees. This will minimize any length mismatch causes by the bends and therefore minimize the impact bends have on EMI.
- Route all differential pairs on the same of layer.
- The number of VIAS should be kept to a minimum. It is recommended to keep the VIAS count to 2 or less.
- Keep traces on layers adjacent to ground plane.
- Do not route differential pairs over any plane split.
- Adding test points will cause impedance discontinuity; and will therefore, negatively impact signal performance. If test points are used, they should be placed in series and symmetrically. They must not be placed in a manner that causes a stub on the differential pair.

- The 100-nF capacitors on the TXP and SSTXN nets must be placed close to the USB connector (Type A, Type B, and so forth).
- The ESD and EMI protection devices (if used) must also be placed as close as possible to the USB connector.
- Place voltage regulators as far away as possible from the differential pairs.
- To minimize crosstalk, TI recommends keeping high-speed signals away from each other. Each pair must be separated by at least 5 times the signal trace width. Separating with ground also helps minimize crosstalk.

8.4.2 Layout Example

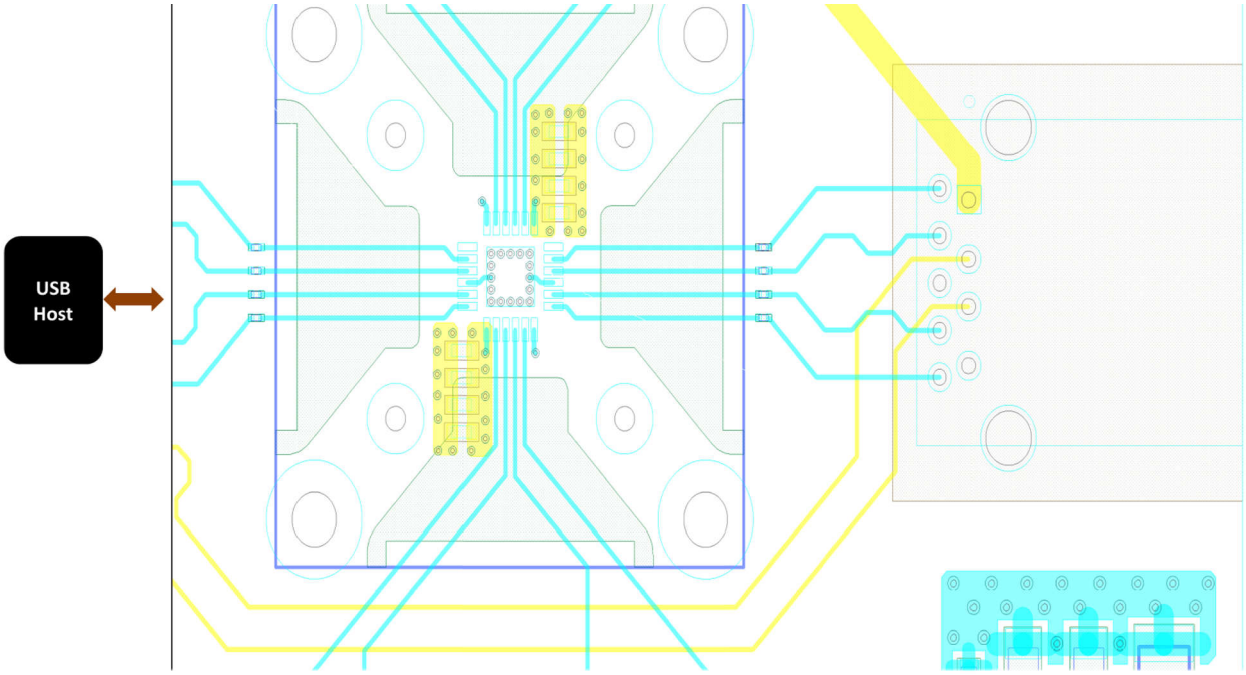

图 8-3. Example Layout

Copyright © 2023 Texas Instruments Incorporated

9 Device and Documentation Support

9.1 接收文档更新通知

要接收文档更新通知，请导航至 ti.com 上的器件产品文件夹。点击*通知* 进行注册，即可每周接收产品信息更改摘要。有关更改的详细信息，请查看任何已修订文档中包含的修订历史记录。

9.2 支持资源

TI E2E™ 中文支持论坛是工程师的重要参考资料，可直接从专家处获得快速、经过验证的解答和设计帮助。搜索现有解答或提出自己的问题，获得所需的快速设计帮助。

链接的内容由各个贡献者“按原样”提供。这些内容并不构成 TI 技术规范，并且不一定反映 TI 的观点；请参阅 TI 的使用条款。

9.3 Trademarks

TI E2E™ is a trademark of Texas Instruments.
所有商标均为其各自所有者的财产。

9.4 静电放电警告

静电放电 (ESD) 会损坏这个集成电路。德州仪器 (TI) 建议通过适当的预防措施处理所有集成电路。如果不遵守正确的处理和安装程序，可能会损坏集成电路。

ESD 的损坏小至导致微小的性能降级，大至整个器件故障。精密的集成电路可能更容易受到损坏，这是因为非常细微的参数更改都可能会导致器件与其发布的规格不相符。

9.5 术语表

TI 术语表	本术语表列出并解释了术语、首字母缩略词和定义。

10 Mechanical, Packaging, and Orderable Information

The following pages include mechanical, packaging, and orderable information. This information is the most current data available for the designated devices. This data is subject to change without notice and revision of this document. For browser-based versions of this data sheet, refer to the left-hand navigation.

PACKAGING INFORMATION

Orderable Device	Status (1)	Package Type	Package Drawing	Pins	Package Qty	Eco Plan (2)	Lead finish/ Ball material (6)	MSL Peak Temp (3)	Op Temp (°C)	Device Marking (4/5)	Samples
TUSB522PIRGER	ACTIVE	VQFN	RGE	24	3000	RoHS & Green	NIPDAU	Level-2-260C-1 YEAR	-40 to 85	TUSB 522P	Samples
TUSB522PIRGET	ACTIVE	VQFN	RGE	24	250	RoHS & Green	NIPDAU	Level-2-260C-1 YEAR	-40 to 85	TUSB 522P	Samples
TUSB522PRGER	ACTIVE	VQFN	RGE	24	3000	RoHS & Green	NIPDAU	Level-2-260C-1 YEAR	0 to 70	TUSB 522P	Samples
TUSB522PRGET	ACTIVE	VQFN	RGE	24	250	RoHS & Green	NIPDAU	Level-2-260C-1 YEAR	0 to 70	TUSB 522P	Samples

(1) The marketing status values are defined as follows:
ACTIVE: Product device recommended for new designs.
LIFEBUY: TI has announced that the device will be discontinued, and a lifetime-buy period is in effect.
NRND: Not recommended for new designs. Device is in production to support existing customers, but TI does not recommend using this part in a new design.
PREVIEW: Device has been announced but is not in production. Samples may or may not be available.
OBSOLETE: TI has discontinued the production of the device.

(2) **RoHS:** TI defines "RoHS" to mean semiconductor products that are compliant with the current EU RoHS requirements for all 10 RoHS substances, including the requirement that RoHS substance do not exceed 0.1% by weight in homogeneous materials. Where designed to be soldered at high temperatures, "RoHS" products are suitable for use in specified lead-free processes. TI may reference these types of products as "Pb-Free".
RoHS Exempt: TI defines "RoHS Exempt" to mean products that contain lead but are compliant with EU RoHS pursuant to a specific EU RoHS exemption.
Green: TI defines "Green" to mean the content of Chlorine (Cl) and Bromine (Br) based flame retardants meet JS709B low halogen requirements of <=1000ppm threshold. Antimony trioxide based flame retardants must also meet the <=1000ppm threshold requirement.

(3) MSL, Peak Temp. - The Moisture Sensitivity Level rating according to the JEDEC industry standard classifications, and peak solder temperature.

(4) There may be additional marking, which relates to the logo, the lot trace code information, or the environmental category on the device.

(5) Multiple Device Markings will be inside parentheses. Only one Device Marking contained in parentheses and separated by a "~" will appear on a device. If a line is indented then it is a continuation of the previous line and the two combined represent the entire Device Marking for that device.

(6) Lead finish/Ball material - Orderable Devices may have multiple material finish options. Finish options are separated by a vertical ruled line. Lead finish/Ball material values may wrap to two lines if the finish value exceeds the maximum column width.

Important Information and Disclaimer: The information provided on this page represents TI's knowledge and belief as of the date that it is provided. TI bases its knowledge and belief on information provided by third parties, and makes no representation or warranty as to the accuracy of such information. Efforts are underway to better integrate information from third parties. TI has taken and

continues to take reasonable steps to provide representative and accurate information but may not have conducted destructive testing or chemical analysis on incoming materials and chemicals.
TI and TI suppliers consider certain information to be proprietary, and thus CAS numbers and other limited information may not be available for release.

In no event shall TI's liability arising out of such information exceed the total purchase price of the TI part(s) at issue in this document sold by TI to Customer on an annual basis.

TAPE AND REEL INFORMATION

REEL DIMENSIONS

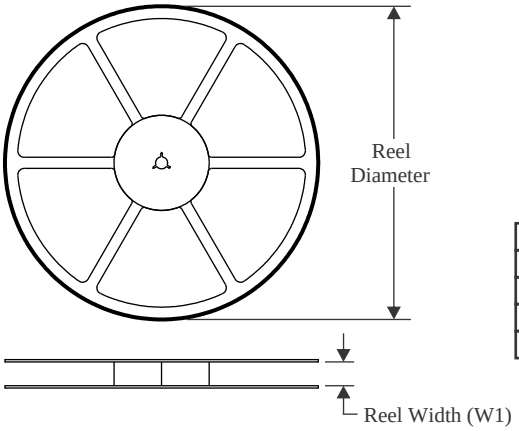

TAPE DIMENSIONS

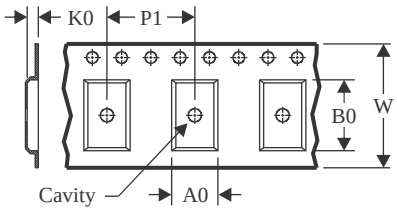

A0	Dimension designed to accommodate the component width
B0	Dimension designed to accommodate the component length
K0	Dimension designed to accommodate the component thickness
W	Overall width of the carrier tape
P1	Pitch between successive cavity centers

QUADRANT ASSIGNMENTS FOR PIN 1 ORIENTATION IN TAPE

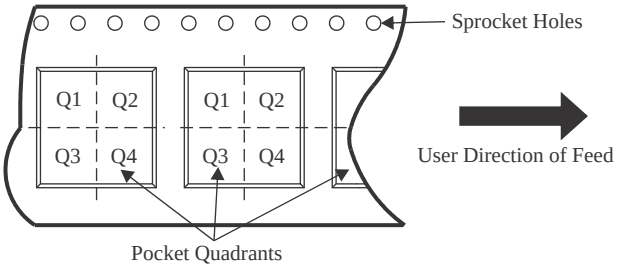

*All dimensions are nominal

Device	Package Type	Package Drawing	Pins	SPQ	Reel Diameter (mm)	Reel Width W1 (mm)	A0 (mm)	B0 (mm)	K0 (mm)	P1 (mm)	W (mm)	Pin1 Quadrant
TUSB522PIRGER	VQFN	RGE	24	3000	330.0	12.4	4.25	4.25	1.15	8.0	12.0	Q2
TUSB522PIRGET	VQFN	RGE	24	250	180.0	12.4	4.25	4.25	1.15	8.0	12.0	Q2
TUSB522PRGER	VQFN	RGE	24	3000	330.0	12.4	4.25	4.25	1.15	8.0	12.0	Q2
TUSB522PRGET	VQFN	RGE	24	250	180.0	12.4	4.25	4.25	1.15	8.0	12.0	Q2

TAPE AND REEL BOX DIMENSIONS

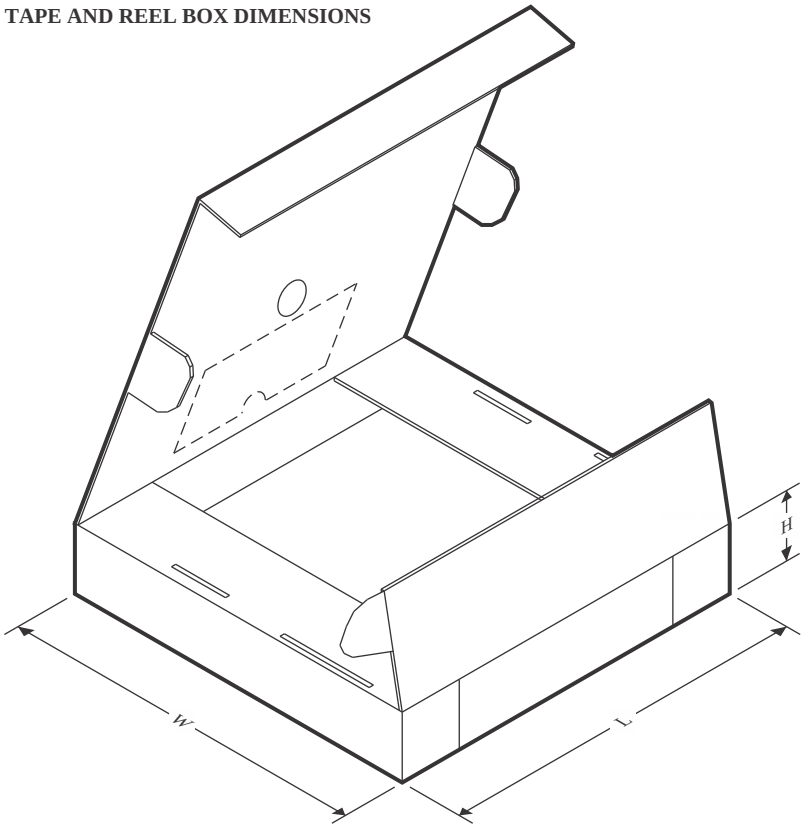

*All dimensions are nominal

Device	Package Type	Package Drawing	Pins	SPQ	Length (mm)	Width (mm)	Height (mm)
TUSB522PIRGER	VQFN	RGE	24	3000	356.0	356.0	35.0
TUSB522PIRGET	VQFN	RGE	24	250	210.0	185.0	35.0
TUSB522PRGER	VQFN	RGE	24	3000	356.0	356.0	35.0
TUSB522PRGET	VQFN	RGE	24	250	210.0	185.0	35.0

RGE 24 VQFN - 1 mm max height

PLASTIC QUAD FLATPACK - NO LEAD

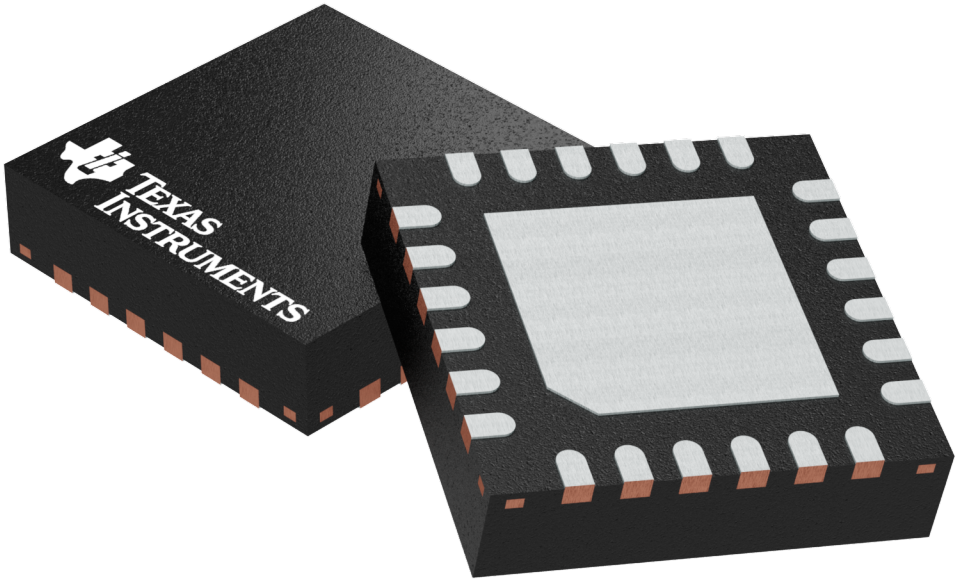

Images above are just a representation of the package family, actual package may vary.
Refer to the product data sheet for package details.

PLASTIC QUAD FLATPACK- NO LEAD

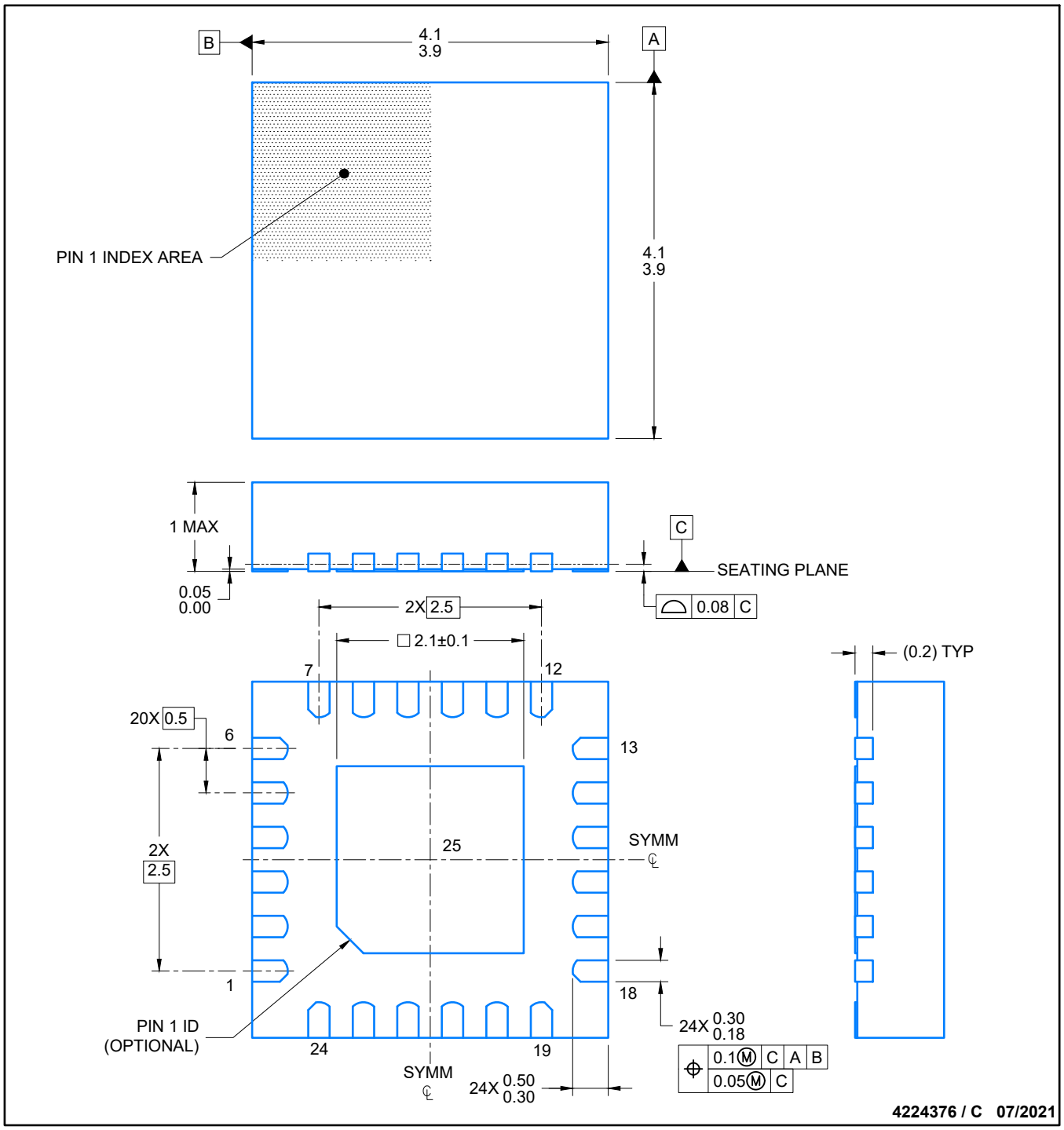

NOTES:

1. All linear dimensions are in millimeters. Any dimensions in parenthesis are for reference only. Dimensioning and tolerancing per ASME Y14.5M.
2. This drawing is subject to change without notice.
3. The package thermal pad must be soldered to the printed circuit board for thermal and mechanical performance.

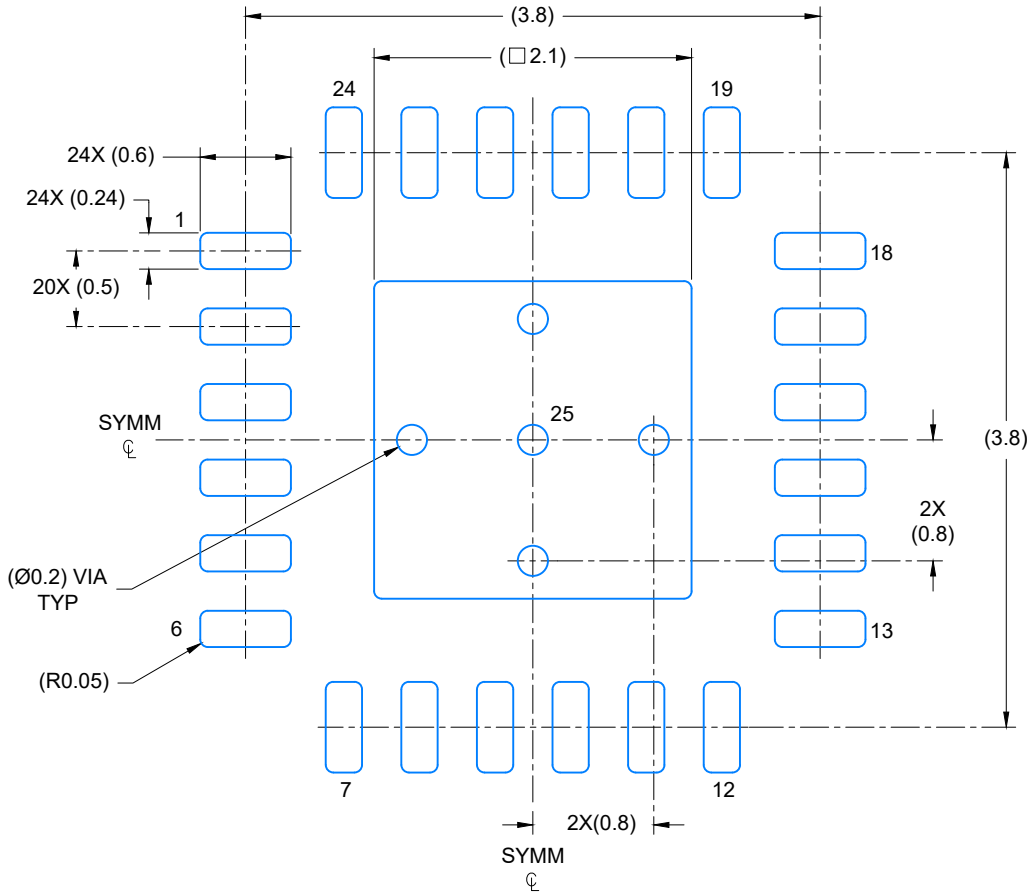

LAND PATTERN EXAMPLE
SCALE: 20X

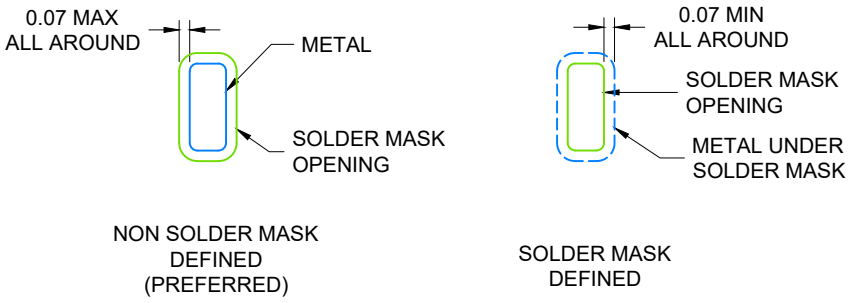

SOLDER MASK DETAILS

4224376 / C 06/2021

NOTES: (continued)

4. This package is designed to be soldered to a thermal pad on the board. For more information, see Texas Instruments literature number SLUA271 (www.ti.com/lit/slua271).
5. Solder mask tolerances between and around signal pads can vary based on board fabrication site.

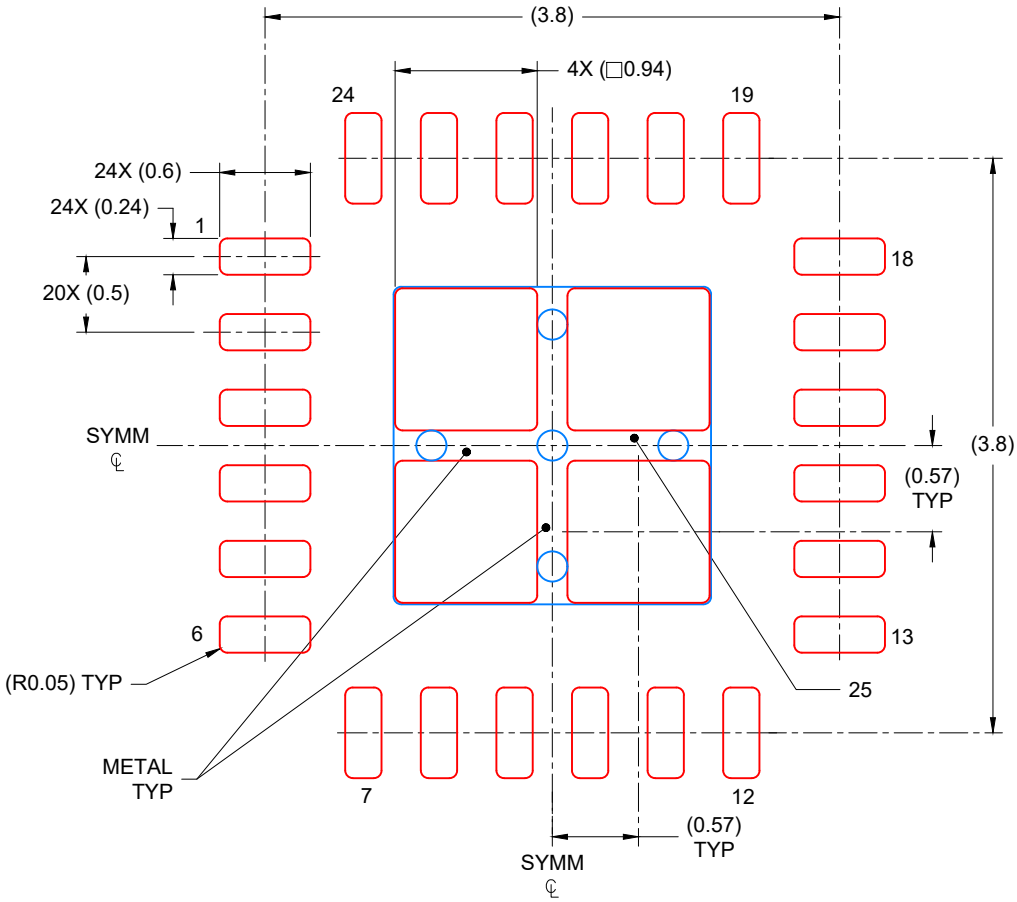

SOLDER PASTE EXAMPLE
BASED ON 0.125 mm THICK STENCIL

EXPOSED PAD
80% PRINTED COVERAGE BY AREA
SCALE: 20X

4224376 / C 06/2021

NOTES: (continued)

6. Laser cutting apertures with trapezoidal walls and rounded corners may offer better paste release. IPC-7525 may have alternate design recommendations..

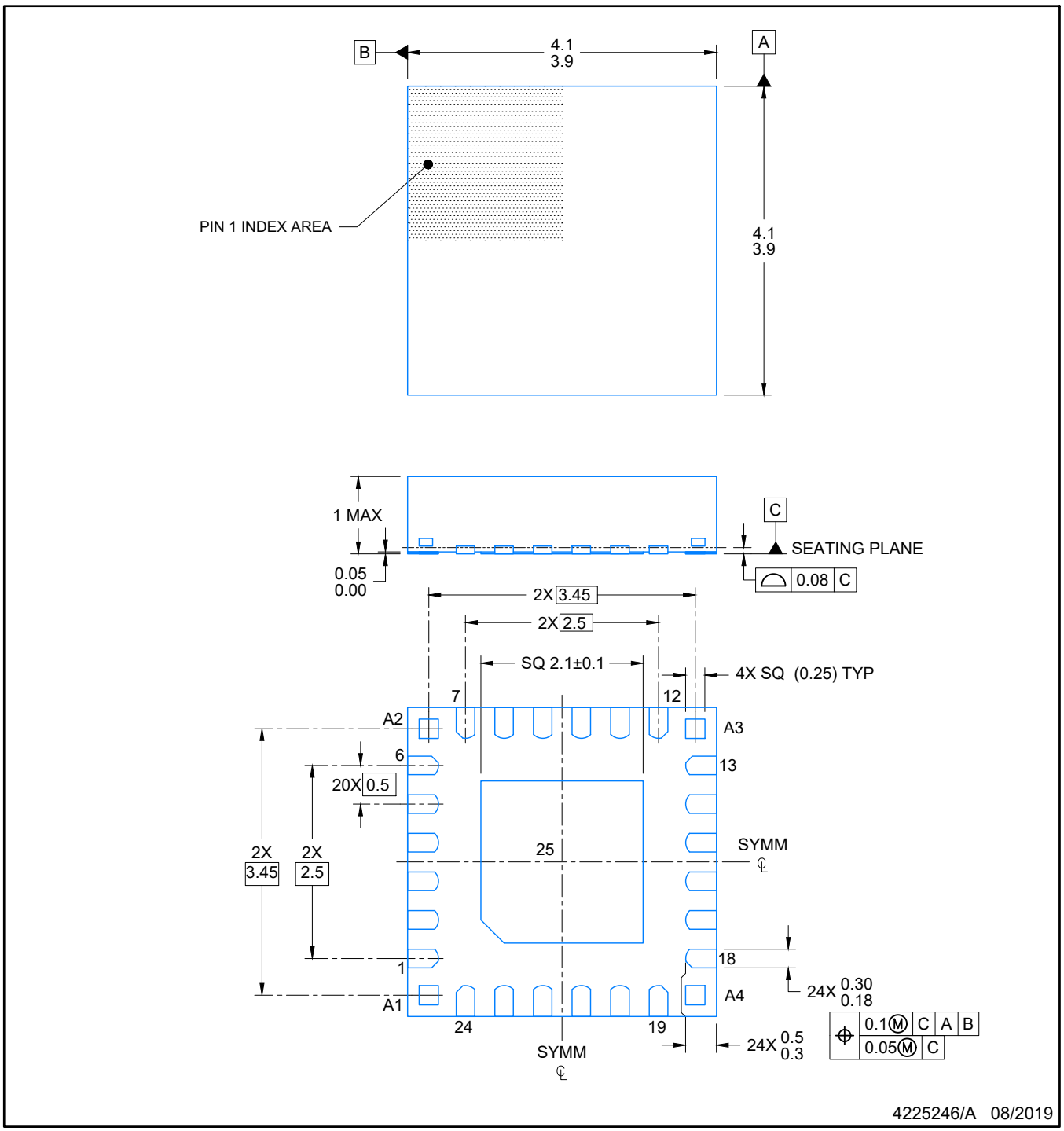

NOTES:

1. All linear dimensions are in millimeters. Any dimensions in parenthesis are for reference only. Dimensioning and tolerancing per ASME Y14.5M.
2. This drawing is subject to change without notice.
3. The package thermal pad must be soldered to the printed circuit board for optimal thermal and mechanical performance.

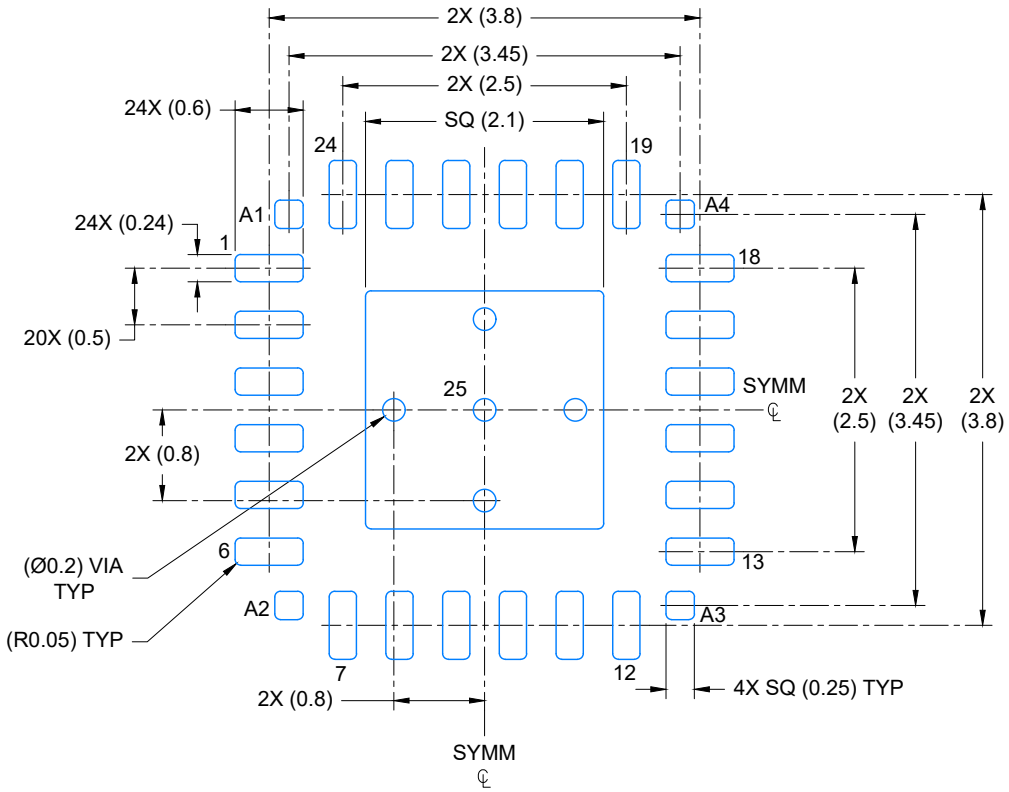

LAND PATTERN EXAMPLE
EXPOSED METAL SHOWN
SCALE: 15X

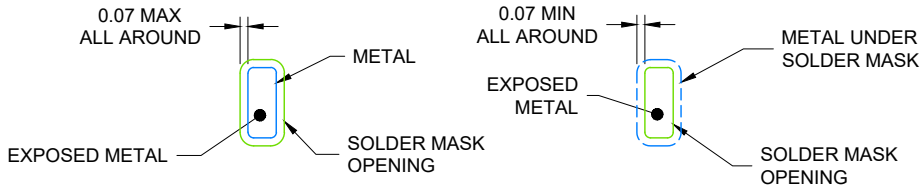

NON SOLDER MASK DEFINED (PREFERRED)

SOLDER MASK DEFINED

SOLDER MASK DETAILS

4225246/A 08/2019

NOTES: (continued)

4. This package is designed to be soldered to a thermal pad on the board. For more information, see Texas Instruments literature number SLUA271 (www.ti.com/lit/slua271).
5. Vias are optional depending on application, refer to device data sheet. If any vias are implemented, refer to their locations shown on this view. It is recommended that vias under paste be filled, plugged or tented.

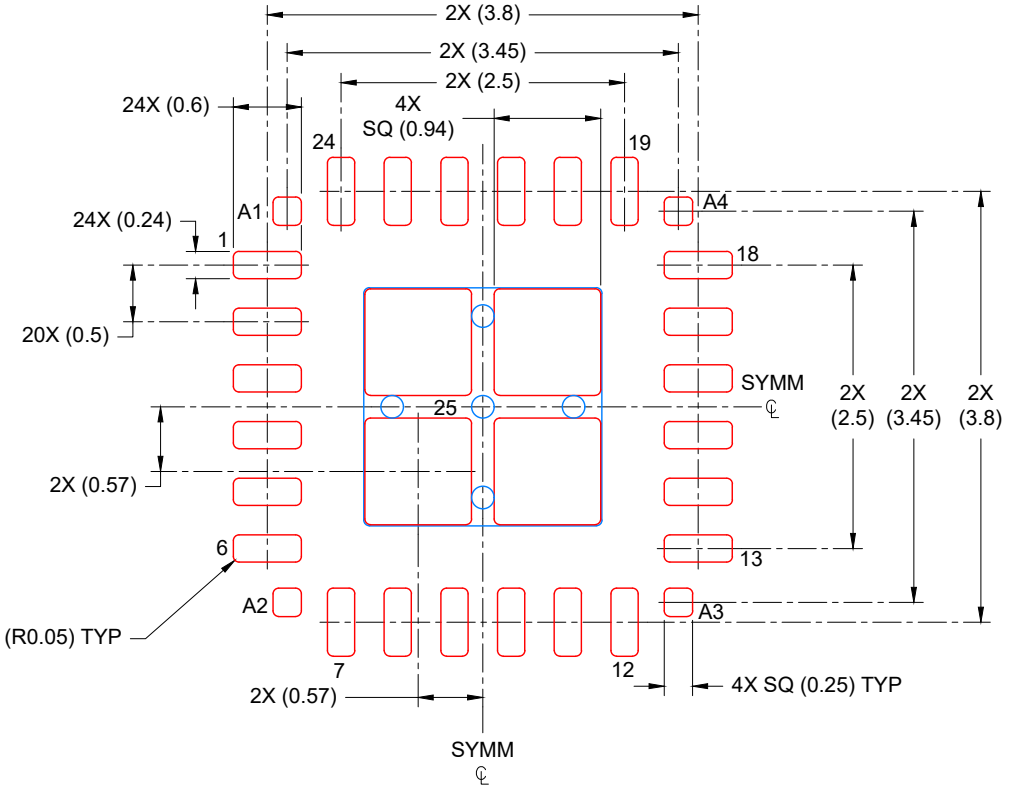

SOLDER PASTE EXAMPLE
BASED ON 0.125 mm THICK STENCIL

EXPOSED PAD
80% PRINTED COVERAGE BY AREA
SCALE: 15X

4225246/A 08/2019

NOTES: (continued)

6. Laser cutting apertures with trapezoidal walls and rounded corners may offer better paste release. IPC-7525 may have alternate design recommendations.

重要声明和免责声明

TI“按原样”提供技术和可靠性数据（包括数据表）、设计资源（包括参考设计）、应用或其他设计建议、网络工具、安全信息和其他资源，不保证没有瑕疵且不做出任何明示或暗示的担保，包括但不限于对适销性、某特定用途方面的适用性或不侵犯任何第三方知识产权的暗示担保。

这些资源可供使用 TI 产品进行设计的熟练开发人员使用。您将自行承担以下全部责任：(1) 针对您的应用选择合适的 TI 产品，(2) 设计、验证并测试您的应用，(3) 确保您的应用满足相应标准以及任何其他功能安全、信息安全、监管或其他要求。

这些资源如有变更，恕不另行通知。TI 授权您仅可将这些资源用于研发本资源所述的 TI 产品的应用。严禁对这些资源进行其他复制或展示。您无权使用任何其他 TI 知识产权或任何第三方知识产权。您应全额赔偿因在这些资源的使用中对 TI 及其代表造成的任何索赔、损害、成本、损失和债务，TI 对此概不负责。

TI 提供的产品受 TI 的销售条款或 ti.com 上其他适用条款/TI 产品随附的其他适用条款的约束。TI 提供这些资源并不会扩展或以其他方式更改 TI 针对 TI 产品发布的适用的担保或担保免责声明。

TI 反对并拒绝您可能提出的任何其他或不同的条款。

邮寄地址：Texas Instruments, Post Office Box 655303, Dallas, Texas 75265
Copyright © 2024，德州仪器 (TI) 公司