SNx5C116x 双路差分驱动器和接收器

1 特性

- 达到或超出 TIA/EIA-422-B 和 ITU Recommendation V.11 标准的要求
- BiCMOS 工艺技术
- 低电源电流要求：9mA（最大值）
- 低脉冲偏斜
- 接收器输入阻抗：17kΩ（典型值）
- 接收器输入灵敏度：±200mV
- 接收器共模输入电压范围为 −7V 至 7V
- 使用 5V 单电源供电
- 无干扰上电和断电保护
- 接收器三态输出低电平有效使能（仅限 SN65C1167 和 SN75C1167）
- MC34050 和 MC34051 的改良替代品

2 应用

- 电机驱动器
- 工厂自动化
- 楼宇自动化

3 说明

SN65C1167 、 SN75C1167 、 SN65C1168 和 SN75C1168 双路驱动器和接收器是专为平衡传输线路而设计的集成电路。这些器件符合 TIA/EIA-422-B 和 ITU 建议 V.11 的要求。

SN65C1167 和 SN75C1167 整合了双三态差分线路驱动器和三态差分线路接收器，两者均采用 5V 单电源供电。驱动器和接收器分别具有高电平有效和低电平有效使能端，它们可以在外部连接在一起，用作方向控制。SN65C1168 和 SN75C1168 驱动器具有单独的高电平有效使能端。

封装信息

器件型号	封装(1)	封装尺寸(2)
SN65C1167	DB (SSOP)	6.2mm x 5.30mm
	NS (SOP)	10.3mm x 5.30mm
SN75C1167	DB (SSOP)	6.2mm x 5.30mm
	N (PDIP)	19.3mm x 6.35mm
	NS (SOP)	10.3mm x 5.30mm
SN65C1168	N (PDIP)	19.3mm x 6.35mm
	NS (SOP)	10.3mm x 5.30mm
	PW (TSSOP)	5mm x 4.40mm
SN75C1168	DB (SSOP)	6.2mm x 5.30mm
	N (PDIP)	19.3mm x 6.35mm
	NS (SOP)	10.3mm x 5.30mm
	PW (TSSOP)	5mm x 4.4mm

(1) 有关更多信息，请参阅 节 10。
(2) 封装尺寸（长 x 宽）为标称值，并包括引脚（如适用）。

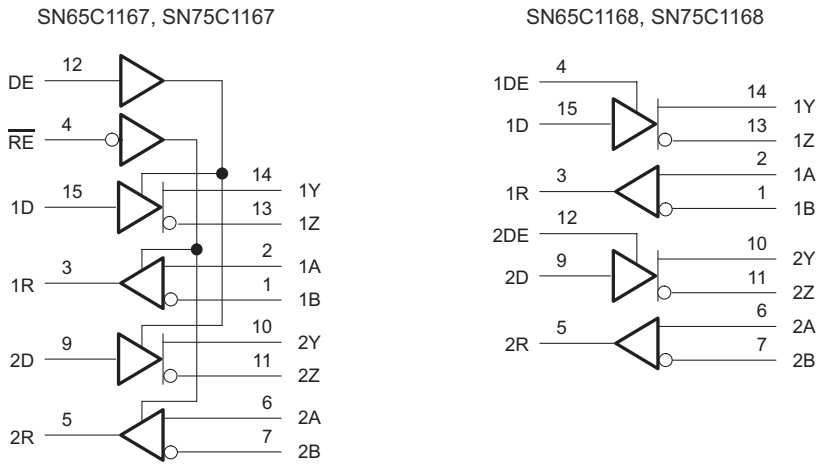

逻辑图（正逻辑）

本资源的原文使用英文撰写。 为方便起见，TI 提供了译文；由于翻译过程中可能使用了自动化工具，TI 不保证译文的准确性。 为确认准确性，请务必访问 ti.com 参考最新的英文版本（控制文档）。

Table of Contents

1 特性.... 1
2 应用.... 1
3 说明.... 1
4 Pin Configuration and Functions.... 3
5 Specifications.... 5
5.1 Absolute Maximum Ratings.... 5
5.2 ESD Ratings.... 5
5.3 Recommended Operating Conditions.... 5
5.4 Thermal Information.... 6
5.5 Electrical Characteristics, Driver Section[(2)] 6
5.6 Switching Characteristics.... 8
5.7 Electrical Characteristics, Receiver Section.... 8
5.8 Switching Characteristics.... 9
6 Parameter Measurement Information.... 10
7 Detailed Description.... 12
7.1 Functional Block Diagram.... 12
7.2 Device Functional Modes.... 13
8 Device and Documentation Support.... 14
8.1 Documentation Support.... 14
8.2 接收文档更新通知.... 14
8.3 支持资源.... 14
8.4 Trademarks.... 14
8.5 静电放电警告.... 14
8.6 术语表.... 14
9 Revision History.... 14
10 Mechanical, Packaging, and Orderable Information.... 14

Copyright © 2024 Texas Instruments Incorporated

4 Pin Configuration and Functions

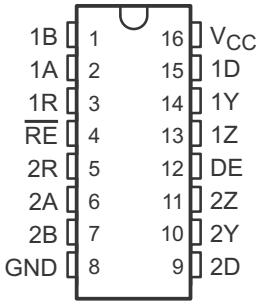

图 4-1. SN65C1167: DB or NS Package
SN75C1167: DB, N, or NS Package
(Top View)

表 4-1. Pin Functions, SNx5C1167

PIN		TYPE(1)	DESCRIPTION
NAME	NO.		
1B	1	I	Inverting Input of Channel 1 Differential Receiver
1A	2	I	Non-Inverting Input of Channel 1 Differential Receiver
1R	3	O	Single Ended Receiver Output for Channel 1
$\overline{RE}$	4	I	Receiver Active Low Enable Input for Channel 1 and 2
2R	5	O	Single Ended Receiver Output for Channel 2
2A	6	I	Non-Inverting Input of Channel 1 Differential Receiver
2B	7	I	Inverting Input of Channel 2 Differential Receiver
GND	8	G	Device Ground
2D	9	I	Single Ended Driver Input for Channel 2
2Y	10	O	Non-Inverting Output of Channel 2 Differential Driver
2Z	11	O	Inverting Output of Channel 2 Differential Driver
DE	12	I	Driver Active High Enable Input for Channel 1 and 2
1Z	13	O	Inverting Output of Channel 1 Differential Driver
1Y	14	O	Non-Inverting Output of Channel 1 Differential Driver
1D	15	I	Single Ended Driver Input for Channel 1
V_{CC}	16	P	Device VCC, connect 4.5V to 5.5V Source between this Pin and Device Ground

(1) I = Input, O = Output, I/O = Input or Output, G = Ground, P = Power.

Copyright © 2024 Texas Instruments Incorporated

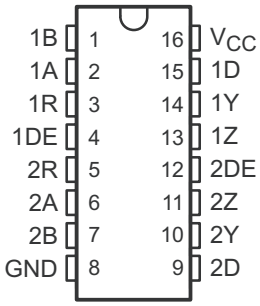

图 4-2. SN65C1168: N, NS, or PW Package
SN75C1168: DB, N, NS, or PW Package
(Top View)

表 4-2. Pin Functions, SNx5C1168

PIN		TYPE(1)	DESCRIPTION
NAME	NO.		
1B	1	I	Inverting Input of Channel 1 Differential Receiver
1A	2	I	Non-Inverting Input of Channel 1 Differential Receiver
1R	3	O	Single Ended Receiver Output for Channel 1
1DE	4	I	Driver Active High Enable Input for Channel 1
2R	5	O	Single Ended Receiver Output for Channel 2
2A	6	I	Non-Inverting Input of Channel 1 Differential Receiver
2B	7	I	Inverting Input of Channel 2 Differential Receiver
GND	8	G	Device Ground
2D	9	I	Single Ended Driver Input for Channel 2
2Y	10	O	Non-Inverting Output of Channel 2 Differential Driver
2Z	11	O	Inverting Output of Channel 2 Differential Driver
2DE	12	I	Driver Active High Enable Input for Channel 2
1Z	13	O	Inverting Output of Channel 1 Differential Driver
1Y	14	O	Non-Inverting Output of Channel 1 Differential Driver
1D	15	I	Single Ended Driver Input for Channel 1
V_{CC}	16	P	Device VCC, connect 4.5V to 5.5V Source between this Pin and Device Ground

(1) I = Input, O = Output, I/O = Input or Output, G = Ground, P = Power.

Copyright © 2024 Texas Instruments Incorporated

5 Specifications

5.1 Absolute Maximum Ratings

over operating free-air temperature range (unless otherwise noted)[1]

			MIN	MAX	UNIT
V_{CC}	Supply voltage range[2]		– 0.5	7	V
V_I	Input voltage range	Driver	– 0.5	V_{CC} + 0.5	V
		A or B, Receiver	– 11	14	
V_{ID}	Differential input voltage range[3]	Receiver	– 14	14	V
V_O	Output voltage range	Driver	– 0.5	7	V
I_{IK} or I_{OK}	Clamp current range	Driver		±20	mA
I_O	Output current range	Driver		±150	mA
		Receiver		±25	
I_{CC}	Supply current			200	mA
	GND current			−200	mA
T_J	Operating virtual junction temperature			150	°C
T_{stg}	Storage temperature range		– 65	150	°C

(1) Stresses beyond those listed under *Absolute Maximum Ratings* may cause permanent damage to the device. These are stress ratings only, which do not imply functional operation of the device at these or any other conditions beyond those indicated under *Recommended Operating Conditions*. Exposure to absolute-maximum-rated conditions for extended periods may affect device reliability.
(2) All voltages values except differential input voltage are with respect to the network GND.
(3) Differential input voltage is measured at the noninverting terminal with respect to the inverting terminal.

5.2 ESD Ratings

			VALUE	UNIT
$V_{(ESD)}$	Electrostatic discharge	Human-body model (HBM), per ANSI/ESDA/JEDEC JS-001[1]	± 8kV	V
		Charged-device model (CDM), per JEDEC specification JESD22-C101[2]	± 1kV	

(1) JEDEC document JEP155 states that 500V HBM allows safe manufacturing with a standard ESD control process.
(2) JEDEC document JEP157 states that 250V CDM allows safe manufacturing with a standard ESD control process. .

5.3 Recommended Operating Conditions

over operating free-air temperature range (unless otherwise noted)

			MIN	NOM	MAX	UNIT
V_{CC}	Supply voltage		4.5	5	5.5	V
V_{IC}	Common-mode input voltage[1]	Receiver			±7	V
V_{ID}	Differential input voltage	Receiver			±7	V
V_{IH}	High-level input voltage	Except A, B	2			V
V_{IL}	Low-level input voltage	Except A, B			0.8	V
I_{OH}	High-level output current	Receiver			−6	mA
		Driver			−20	
I_{OL}	Low-level output current	Receiver			6	mA
		Driver			20	

5.3 Recommended Operating Conditions（续）

over operating free-air temperature range (unless otherwise noted)

			MIN	NOM	MAX	UNIT
T_A	Operating free-air temperature	SN75C1167, SN75C1168	0		70	°C
		SN65C1167, SN65C1168	–40		85	

(1) Refer to TIA/EIA-422-B for exact conditions.

5.4 Thermal Information

THERMAL METRIC[1]		DB (SSOP) 16 PINS	N (PDIP) 16 PINS	NS (SOP) 16 PINS	PW (TSSOP) 16 PINS	UNIT
$R_{\theta JA}$	Junction-to-ambient thermal resistance	102.6	60.6	88.5	107.5	°C/W
$R_{\theta JC(top)}$	Junction-to-case (top) thermal resistance	48.7	48.1	46.2	38.4	°C/W
$R_{\theta JB}$	Junction-to-board thermal resistance	54.3	40.6	50.7	53.7	°C/W
ψ_{JT}	Junction-to-top characterization parameter	11.8	27.5	13.5	3.2	°C/W
ψ_{JB}	Junction-to-board characterization parameter	53.5	40.3	50.3	53.1	°C/W
$R_{\theta JC(bot)}$	Junction-to-case (bottom) thermal resistance	N/A	N/A	N/A	N/A	°C/W

(1) For more information about traditional and new thermal metrics, see the *Semiconductor and IC Package Thermal Metrics* application report.

5.5 Electrical Characteristics, Driver Section[2]

over recommended ranges of supply voltage and operating free-air temperature (unless otherwise noted)

PARAMETER		TEST CONDITIONS		MIN	TYP[1]	MAX	UNIT
V_{IK}	Input clamp voltage	I_I = −18mA				−1.5	V
V_{OH}	High-level output voltage	V_{IH} = 2V, V_{IL} = 0.8V, I_{OH} = −20mA		2.4	3.4		V
V_{OL}	Low-level output voltage	V_{IH} = 2V, V_{IL} = 0.8V, I_{OL} = 20mA			0.2	0.4	V
$\|V_{OD1}\|$	Differential output voltage	I_O = 0mA		2		6	V
$\|V_{OD2}\|$	Differential output voltage [2]	R_L = 100Ω, See 图 6-1		2	3.1		V
$\Delta\|V_{OD}\|$	Change in magnitude of differential output voltage					±0.4	V
V_{OC}	Common-mode output voltage					±3	V
$\Delta\|V_{OC}\|$	Change in magnitude of common-mode output voltage					±0.4	V
$I_{O(OFF)}$	Output current with power off	V_{CC} = 0V	V_O = 6V			100	μA
			V_O = −0.25V			−100	
I_{OZ}	High-impedance-state output current	V_O = 2.5				20	μA
		V_O = 5				−20	
I_{IH}	High-level input current	V_I = V_{CC} or V_{IH}				1	μA
I_{IL}	Low-level input current	V_I = GND or V_{IL}				−1	μA
I_{OS}	Short-circuit output current[3]	V_O = V_{CC} or GND,		−30		−150	mA
I_{CC}	Supply current (total package)[4]	No load, Enabled	V_I = V_{CC} or GND		4	6	mA
			V_I = 2.4 or 0.5V		5	9	
C_i	Input capacitance				6		pF

(1) All typical values are at V_{CC} = 5V, and T_A = 25°C.
(2) Refer to TIA/EIA-422-B for exact conditions.
(3) Not more than one output should be shorted at a time, and the duration of the short circuit should not exceed one second.

Copyright © 2024 Texas Instruments Incorporated

(4) This parameter is measured per input, while the other inputs are at V_{CC} or GND.

5.6 Switching Characteristics

over recommended ranges of supply voltage and operating free-air temperature (unless otherwise noted)

PARAMETER		TEST CONDITIONS		MIN	TYP(1)	MAX	UNIT
t_{PHL}	Propagation delay time, high- to low-level output	R1 = R2 = 50Ω, C1 = C2 = C3 = 40pF, See 图 6-2	R3 = 500Ω, S1 is open,		7	12	ns
t_{PLH}	Propagation delay time, low- to high-level output				7	12	ns
$t_{sk(p)}$	Pulse skew				0.5	4	ns
t_r	Rise time	R1 = R2 = 50Ω, C1 = C2 = C3 = 40pF, See 图 6-3	R3 = 500Ω, S1 is open,		5	10	ns
t_f	Fall time				5	10	ns
t_{PZH}	Output enable time to high level	R1 = R2 = 50Ω, C1 = C2 = C3 = 40pF, See 图 6-4	R3 = 500Ω, S1 is closed,		10	19	ns
t_{PZL}	Output enable time to low level				10	19	ns
t_{PHZ}	Output disable time from low level	R1 = R2 = 50Ω, C1 = C2 = C3 = 40pF, See 图 6-4	R3 = 500Ω, S1 is closed,		7	16	ns
t_{PLZ}	Output disable time from high level				7	16	ns

(1) All typical values are at V_{CC} = 5V, and T_A = 25°C.

5.7 Electrical Characteristics, Receiver Section

over recommended ranges of supply voltage and operating free-air temperature (unless otherwise noted)

PARAMETER			TEST CONDITIONS		MIN	TYP(1)	MAX	UNIT
V_{IT+}	Positive-going input threshold voltage, differential input						0.2	V
V_{IT-}	Negative-going input threshold voltage, differential input				−0.2(2)			V
V_{hys}	Input hysteresis (V_{IT+} − V_{IT-})					60		mV
V_{IK}	Input clamp voltage, $\overline{RE}$	SN75C1167	I_I = −18 mA				−1.5	V
V_{OH}	High-level output voltage		V_{ID} = 200 mV,	I_{OH} = −6 mA	3.8	4.2		V
V_{OL}	Low-level output voltage		V_{ID} = −200 mV,	I_{OL} = 6 mA		0.1	0.3	V
I_{OZ}	High-impedance-state output current	SN75C1167	V_O = VCC or GND			±0.5	±5	μA
I_I	Line input current		Other input at 0 V	V_I = 10 V			1.5	mA
				V_I = −10 V			−2.5	
I_I	Enable input current, $\overline{RE}$	SN75C1167	V_I = V_{CC} or GND				±1	μA
r_i	Input resistance		V_{IC} = −7 V to 7 V,	Other input at 0 V	4	17		kΩ
I_{CC}	Supply current (total package)		No load, Enabled	V_I = V_{CC} or GND		4	6	mA
				V_{IH} = 2.4 V or 0.5 V(3)		5	9	

(1) All typical values are at V_{CC} = 5V and T_A = 25°C.
(2) The algebraic convention, where the less positive (more negative) limit is designated as minimum, is used in this data sheet for common-mode input voltage and threshold voltage levels only.
(3) Refer to TIA/EIA-422-B for exact conditions.

Copyright © 2024 Texas Instruments Incorporated

5.8 Switching Characteristics

over operating free-air temperature range (unless otherwise noted) [2]

PARAMETER		TEST CONDITIONS	MIN	TYP[1]	MAX	UNIT
t_{PLH}	Propagation delay time, low- to high-level output	See 图 6-5	9	17	27	ns
t_{PHL}	Propagation delay time, high- to low-level output		9	17	27	ns
t_{TLH}	Transition time, low- to high-level output	V_{IC} = 0V, See 图 6-5		4	9	ns
t_{THL}	Transition time, high- to low-level output			4	9	ns
t_{PZH}	Output enable time to high level	R_L = 1kW, See 图 6-6		13	22	ns
t_{PZL}	Output enable time to low level			13	22	ns
t_{PHZ}	Output disable time from high level			13	22	ns
t_{PLZ}	Output disable time from low level			13	22	ns

(1) All typical values are at V_{CC} = 5V and T_A = 25°C.
(2) Measured per input while the other inputs are at V_{CC} or GND

6 Parameter Measurement Information

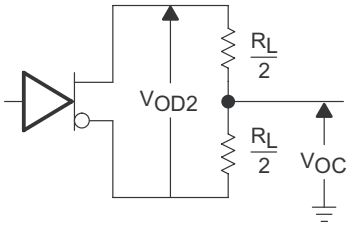

图 6-1. Driver Test Circuit, V_{OD} and V_{OC}

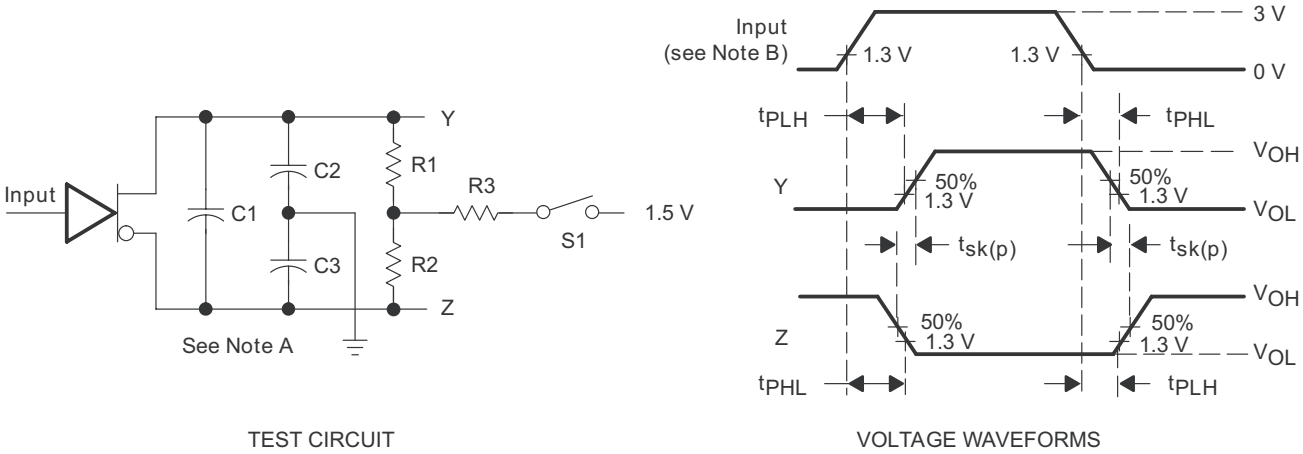

A. C1, C2, and C3 include probe and jig capacitance.

B. The input pulse is supplied by a generator having the following characteristics: PRR = 1MHz, 50% duty cycle, $t_r = t_f \leqslant 6$ns.

图 6-2. Driver Test Circuit and Voltage Waveforms

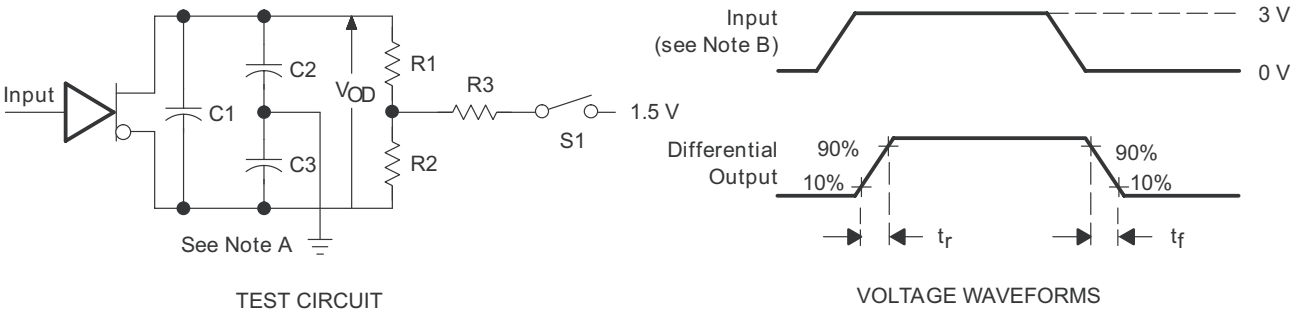

A. C1, C2, and C3 include probe and jig capacitance.

B. The input pulse is supplied by a generator having the following characteristics: PRR = 1MHz, 50% duty cycle, $t_r = t_f \leqslant 6$ns.

图 6-3. Driver Test Circuit and Voltage Waveforms

Copyright © 2024 Texas Instruments Incorporated

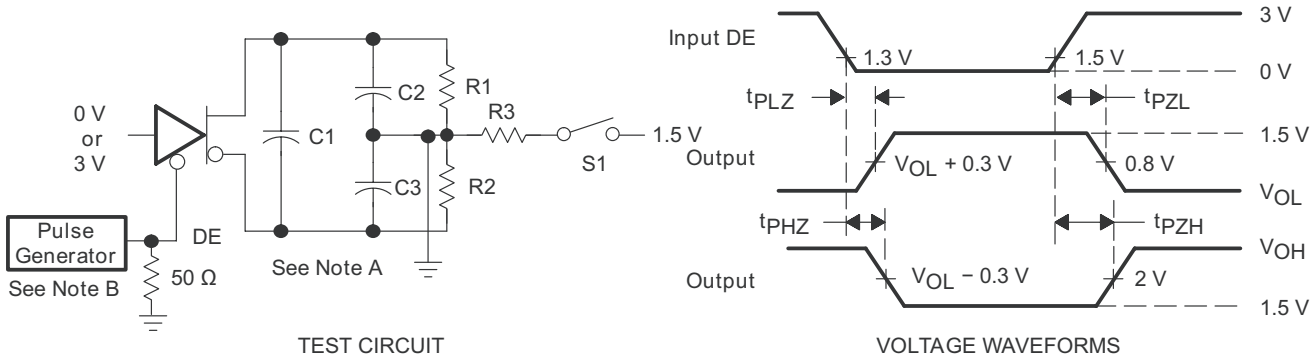

A. C1, C2, and C3 include probe and jig capacitance.

B. The input pulse is supplied by a generator having the following characteristics: PRR = 1MHz, 50% duty cycle, $t_r = t_f \leqslant$ 6ns.

图 6-4. Driver Test Circuit and Voltage Waveforms

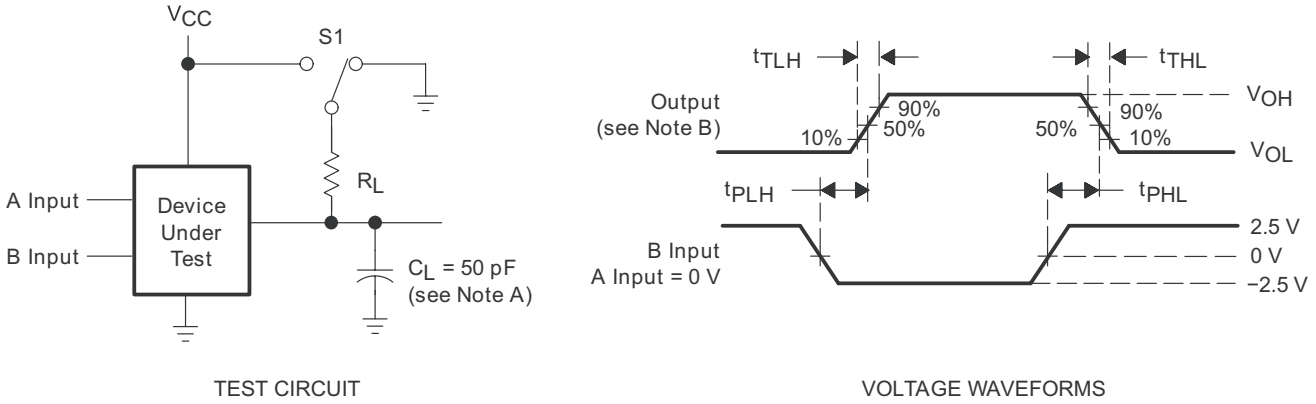

A. C_L includes probe and jig capacitance.

B. The input pulse is supplied by a generator having the following characteristics: PRR = 1MHz, 50% duty cycle, $t_r = t_f \leqslant$6ns.

图 6-5. Receiver Test Circuit and Voltage Waveforms

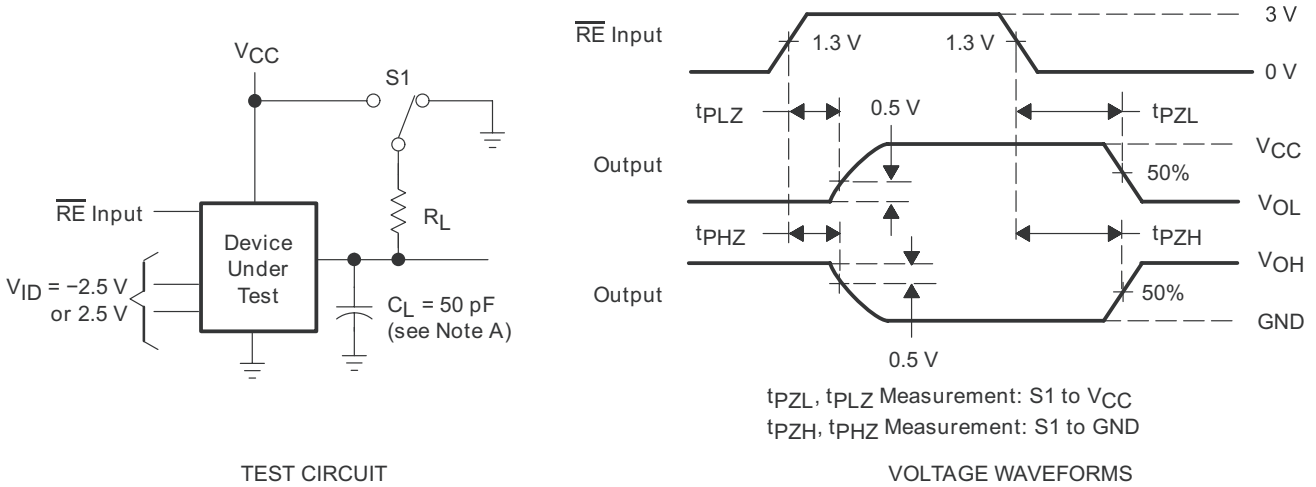

A. C_L includes probe and jig capacitance.

B. The input pulse is supplied by a generator having the following characteristics: PRR = 1MHz, 50% duty cycle, $t_r = t_f \leqslant$ 6ns.

图 6-6. Receiver Test Circuit and Voltage Waveforms

7 Detailed Description

7.1 Functional Block Diagram

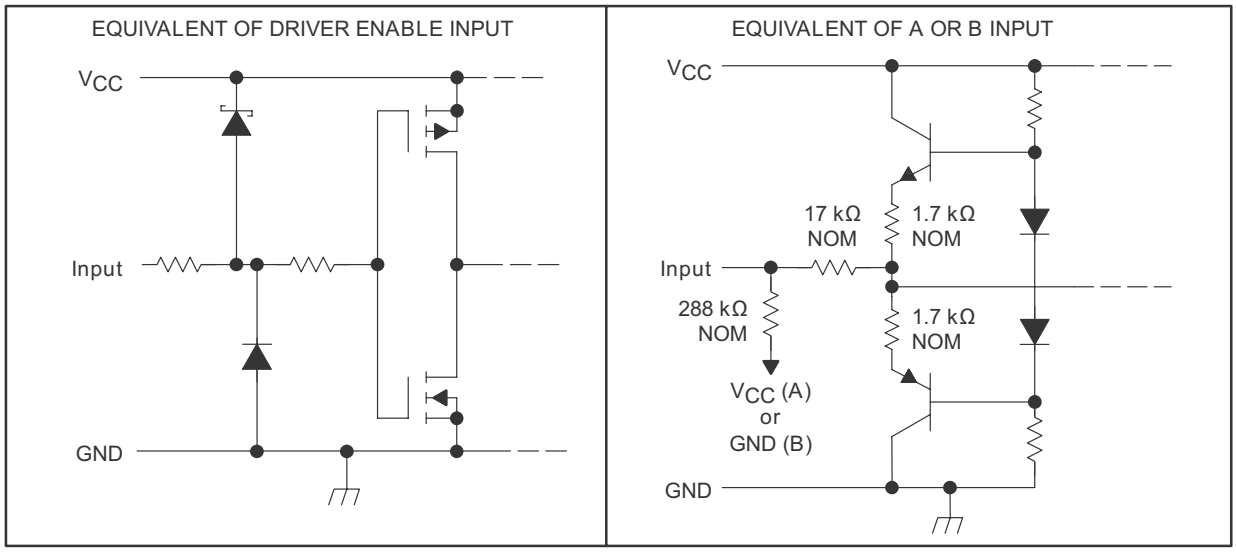

图 7-1. Schematic of Inputs

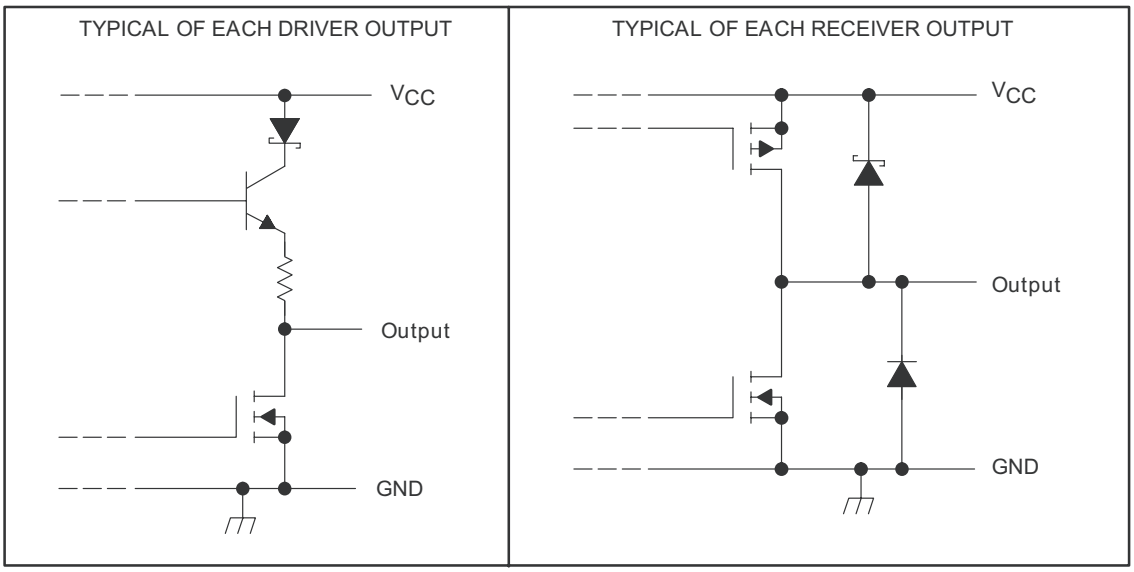

图 7-2. Schematic of Outputs

Copyright © 2024 Texas Instruments Incorporated

7.2 Device Functional Modes

7.2.1 Functions Table

表 7-1. Each Driver[(1)]

INPUT D	ENABLE DE	OUTPUTS	
		Y	Z
H	H	H	L
L	H	L	H
X	L	Z	Z

(1) H = high level, L = low level, X = irrelevant, Z = high impedance

表 7-2. Each Receiver[(1)]

DIFFERENTIAL INPUTS A − B	ENABLE $\overline{RE}$	OUTPUT R
$V_{ID} \geqslant 0.2$ V	L	H
$-0.2V < V_{ID} < 0.2V$	L	?
$V_{ID} \leqslant -0.2V$	L	L
X	H	Z
Open	L	H

(1) H = high level, L = low level, ? = indeterminate, X = irrelevant,
Z = high impedance (off), Open = input disconnected or connected driver off

8 Device and Documentation Support

8.1 Documentation Support

8.2 接收文档更新通知

要接收文档更新通知，请导航至 ti.com 上的器件产品文件夹。点击*通知* 进行注册，即可每周接收产品信息更改摘要。有关更改的详细信息，请查看任何已修订文档中包含的修订历史记录。

8.3 支持资源

TI E2E™ 中文支持论坛是工程师的重要参考资料，可直接从专家处获得快速、经过验证的解答和设计帮助。搜索现有解答或提出自己的问题，获得所需的快速设计帮助。

链接的内容由各个贡献者“按原样”提供。这些内容并不构成 TI 技术规范，并且不一定反映 TI 的观点；请参阅 TI 的使用条款。

8.4 Trademarks

TI E2E™ is a trademark of Texas Instruments.
所有商标均为其各自所有者的财产。

8.5 静电放电警告

静电放电 (ESD) 会损坏这个集成电路。德州仪器 (TI) 建议通过适当的预防措施处理所有集成电路。如果不遵守正确的处理和安装程序，可能会损坏集成电路。

ESD 的损坏小至导致微小的性能降级，大至整个器件故障。精密的集成电路可能更容易受到损坏，这是因为非常细微的参数更改都可能会导致器件与其发布的规格不相符。

8.6 术语表

TI 术语表	本术语表列出并解释了术语、首字母缩略词和定义。

9 Revision History

注：以前版本的页码可能与当前版本的页码不同

Changes from Revision F (November 2009) to Revision G (February 2024) **Page**

- 更改了整个文档中的表格、图和交叉参考的编号格式 1
- Changed the I_{CC} for V_I = 2.4 or 0.5V MAX value From: 3mA To: 9mA in the *Electrical Characteristics, Driver Section* 6

10 Mechanical, Packaging, and Orderable Information

The following pages include mechanical, packaging, and orderable information. This information is the most current data available for the designated devices. This data is subject to change without notice and revision of this document. For browser-based versions of this data sheet, refer to the left-hand navigation.

Copyright © 2024 Texas Instruments Incorporated

PACKAGING INFORMATION

Orderable part number	Status (1)	Material type (2)	Package | Pins	Package qty | Carrier	RoHS (3)	Lead finish/ Ball material (4)	MSL rating/ Peak reflow (5)	Op temp (°C)	Part marking (6)
SN65C1167NSR	Obsolete	Production	SOP (NS) | 16	-	-	Call TI	Call TI	-40 to 85	65C1167
SN65C1168N	Active	Production	PDIP (N) | 16	25 | TUBE	Yes	NIPDAU	N/A for Pkg Type	-40 to 85	SN65C1168N
SN65C1168N.A	Active	Production	PDIP (N) | 16	25 | TUBE	Yes	NIPDAU	N/A for Pkg Type	-40 to 85	SN65C1168N
SN65C1168NSR	Obsolete	Production	SOP (NS) | 16	-	-	Call TI	Call TI	-40 to 85	65C1168
SN65C1168PW	Obsolete	Production	TSSOP (PW) | 16	-	-	Call TI	Call TI	-40 to 85	CB1168
SN65C1168PWR	Obsolete	Production	TSSOP (PW) | 16	-	-	Call TI	Call TI	-40 to 85	CB1168
SN75C1167DB	Obsolete	Production	SSOP (DB) | 16	-	-	Call TI	Call TI	-	CA1167
SN75C1167DBR	Active	Production	SSOP (DB) | 16	2000 | LARGE T&R	Yes	NIPDAU	Level-1-260C-UNLIM	0 to 70	CA1167
SN75C1167DBR.A	Active	Production	SSOP (DB) | 16	2000 | LARGE T&R	Yes	NIPDAU	Level-1-260C-UNLIM	0 to 70	CA1167
SN75C1167N	Active	Production	PDIP (N) | 16	25 | TUBE	Yes	NIPDAU	N/A for Pkg Type	0 to 70	SN75C1167N
SN75C1167N.A	Active	Production	PDIP (N) | 16	25 | TUBE	Yes	NIPDAU	N/A for Pkg Type	0 to 70	SN75C1167N
SN75C1168DBR	Active	Production	SSOP (DB) | 16	2000 | LARGE T&R	Yes	NIPDAU	Level-1-260C-UNLIM	0 to 70	CA1168
SN75C1168DBR.A	Active	Production	SSOP (DB) | 16	2000 | LARGE T&R	Yes	NIPDAU	Level-1-260C-UNLIM	0 to 70	CA1168
SN75C1168N	Active	Production	PDIP (N) | 16	25 | TUBE	Yes	NIPDAU	N/A for Pkg Type	0 to 70	SN75C1168N
SN75C1168N.A	Active	Production	PDIP (N) | 16	25 | TUBE	Yes	NIPDAU	N/A for Pkg Type	0 to 70	SN75C1168N
SN75C1168NE4	Active	Production	PDIP (N) | 16	25 | TUBE	Yes	NIPDAU	N/A for Pkg Type	0 to 70	SN75C1168N
SN75C1168NS	Active	Production	SOP (NS) | 16	50 | TUBE	Yes	NIPDAU	Level-1-260C-UNLIM	0 to 70	75C1168
SN75C1168NS.A	Active	Production	SOP (NS) | 16	50 | TUBE	Yes	NIPDAU	Level-1-260C-UNLIM	0 to 70	75C1168
SN75C1168NSR	Obsolete	Production	SOP (NS) | 16	-	-	Call TI	Call TI	0 to 70	75C1168
SN75C1168PW	Obsolete	Production	TSSOP (PW) | 16	-	-	Call TI	Call TI	0 to 70	CA1168

(1) **Status:** For more details on status, see our product life cycle.

(2) **Material type:** When designated, preproduction parts are prototypes/experimental devices, and are not yet approved or released for full production. Testing and final process, including without limitation quality assurance, reliability performance testing, and/or process qualification, may not yet be complete, and this item is subject to further changes or possible discontinuation. If available for ordering, purchases will be subject to an additional waiver at checkout, and are intended for early internal evaluation purposes only. These items are sold without warranties of any kind.

(3) **RoHS values:** Yes, No, RoHS Exempt. See the TI RoHS Statement for additional information and value definition.

(4) **Lead finish/Ball material:** Parts may have multiple material finish options. Finish options are separated by a vertical ruled line. Lead finish/Ball material values may wrap to two lines if the finish value exceeds the maximum column width.

(5) **MSL rating/Peak reflow:** The moisture sensitivity level ratings and peak solder (reflow) temperatures. In the event that a part has multiple moisture sensitivity ratings, only the lowest level per JEDEC standards is shown. Refer to the shipping label for the actual reflow temperature that will be used to mount the part to the printed circuit board.

(6) **Part marking:** There may be an additional marking, which relates to the logo, the lot trace code information, or the environmental category of the part.

Multiple part markings will be inside parentheses. Only one part marking contained in parentheses and separated by a "~" will appear on a part. If a line is indented then it is a continuation of the previous line and the two combined represent the entire part marking for that device.

Important Information and Disclaimer: The information provided on this page represents TI's knowledge and belief as of the date that it is provided. TI bases its knowledge and belief on information provided by third parties, and makes no representation or warranty as to the accuracy of such information. Efforts are underway to better integrate information from third parties. TI has taken and continues to take reasonable steps to provide representative and accurate information but may not have conducted destructive testing or chemical analysis on incoming materials and chemicals. TI and TI suppliers consider certain information to be proprietary, and thus CAS numbers and other limited information may not be available for release.

In no event shall TI's liability arising out of such information exceed the total purchase price of the TI part(s) at issue in this document sold by TI to Customer on an annual basis.

TAPE AND REEL INFORMATION

REEL DIMENSIONS

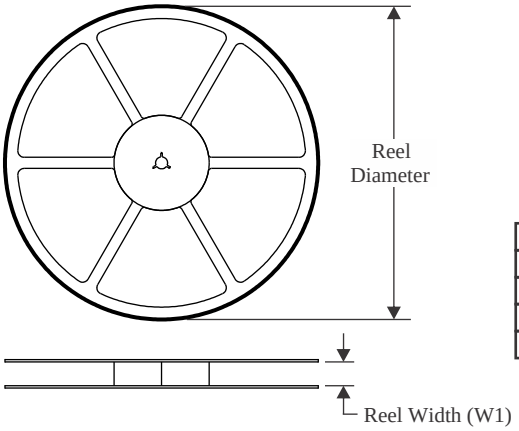

TAPE DIMENSIONS

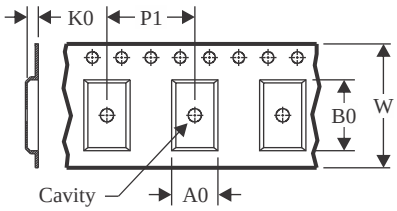

A0	Dimension designed to accommodate the component width
B0	Dimension designed to accommodate the component length
K0	Dimension designed to accommodate the component thickness
W	Overall width of the carrier tape
P1	Pitch between successive cavity centers

QUADRANT ASSIGNMENTS FOR PIN 1 ORIENTATION IN TAPE

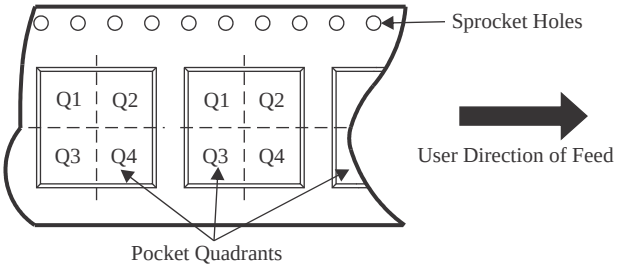

*All dimensions are nominal

Device	Package Type	Package Drawing	Pins	SPQ	Reel Diameter (mm)	Reel Width W1 (mm)	A0 (mm)	B0 (mm)	K0 (mm)	P1 (mm)	W (mm)	Pin1 Quadrant
SN75C1167DBR	SSOP	DB	16	2000	330.0	16.4	8.35	6.6	2.4	12.0	16.0	Q1
SN75C1168DBR	SSOP	DB	16	2000	330.0	16.4	8.35	6.6	2.4	12.0	16.0	Q1

TAPE AND REEL BOX DIMENSIONS

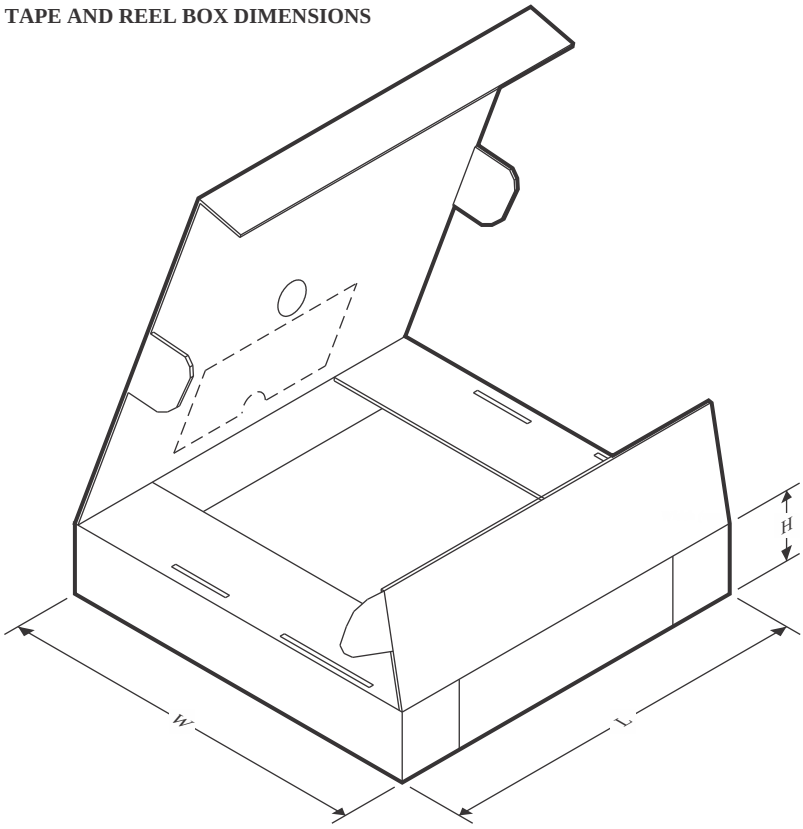

*All dimensions are nominal

Device	Package Type	Package Drawing	Pins	SPQ	Length (mm)	Width (mm)	Height (mm)
SN75C1167DBR	SSOP	DB	16	2000	353.0	353.0	32.0
SN75C1168DBR	SSOP	DB	16	2000	353.0	353.0	32.0

TUBE

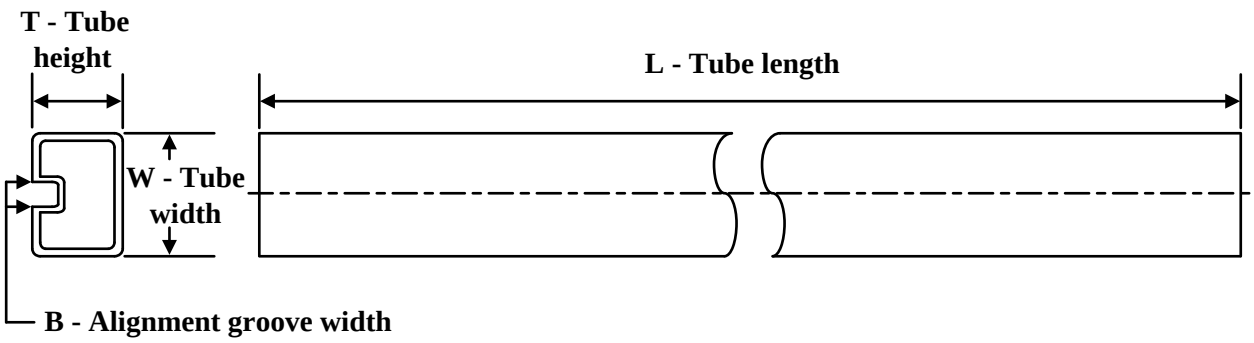

*All dimensions are nominal

Device	Package Name	Package Type	Pins	SPQ	L (mm)	W (mm)	T (µm)	B (mm)
SN65C1168N	N	PDIP	16	25	506	13.97	11230	4.32
SN65C1168N.A	N	PDIP	16	25	506	13.97	11230	4.32
SN75C1167N	N	PDIP	16	25	506	13.97	11230	4.32
SN75C1167N.A	N	PDIP	16	25	506	13.97	11230	4.32
SN75C1168N	N	PDIP	16	25	506	13.97	11230	4.32
SN75C1168N.A	N	PDIP	16	25	506	13.97	11230	4.32
SN75C1168NE4	N	PDIP	16	25	506	13.97	11230	4.32
SN75C1168NS	NS	SOP	16	50	530	10.5	4000	4.1
SN75C1168NS.A	NS	SOP	16	50	530	10.5	4000	4.1

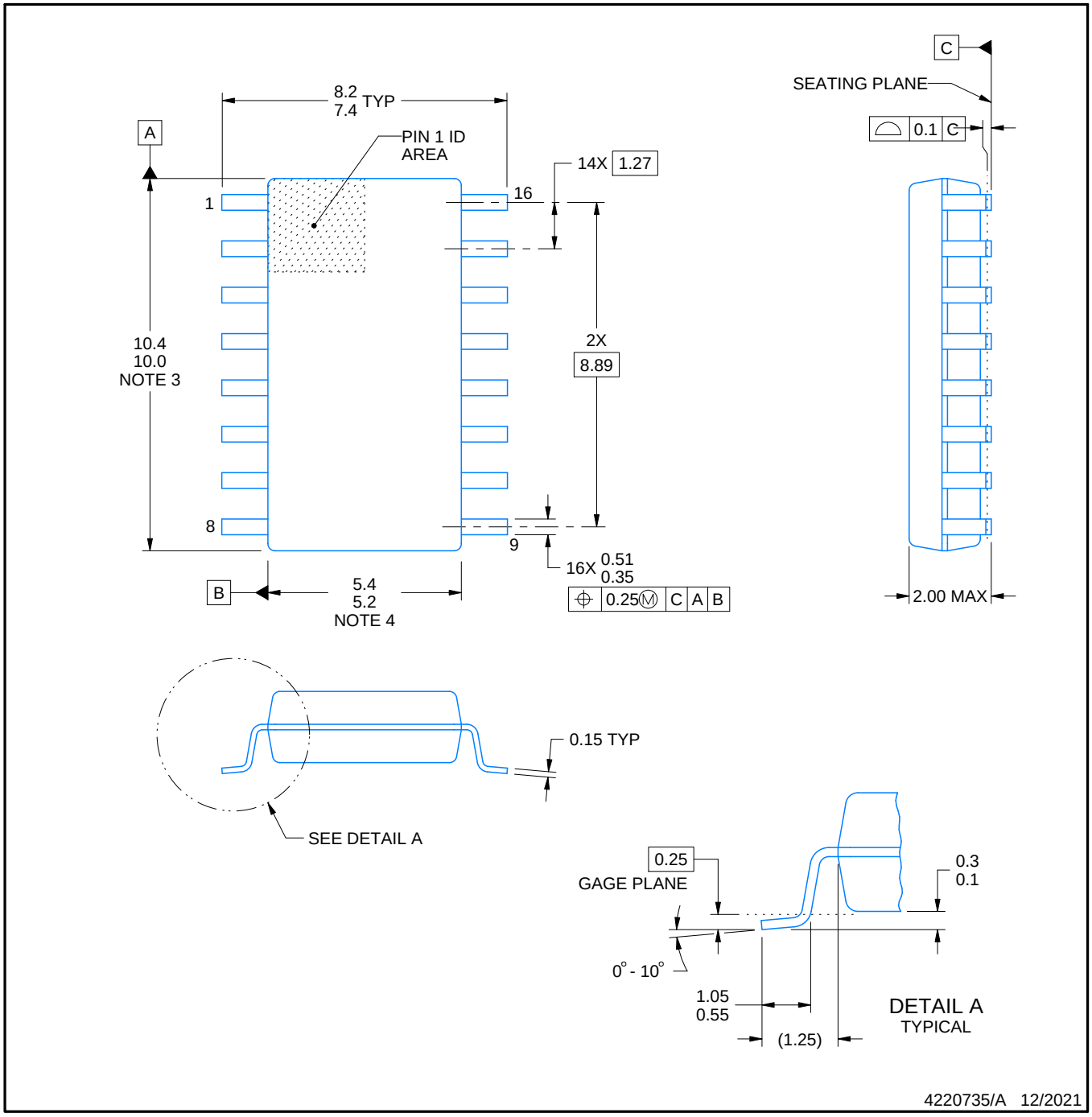

NOTES:

1. All linear dimensions are in millimeters. Dimensions in parenthesis are for reference only. Dimensioning and tolerancing per ASME Y14.5M.
2. This drawing is subject to change without notice.
3. This dimension does not include mold flash, protrusions, or gate burrs. Mold flash, protrusions, or gate burrs shall not exceed 0.15 mm, per side.
4. This dimension does not include interlead flash. Interlead flash shall not exceed 0.25 mm, per side.

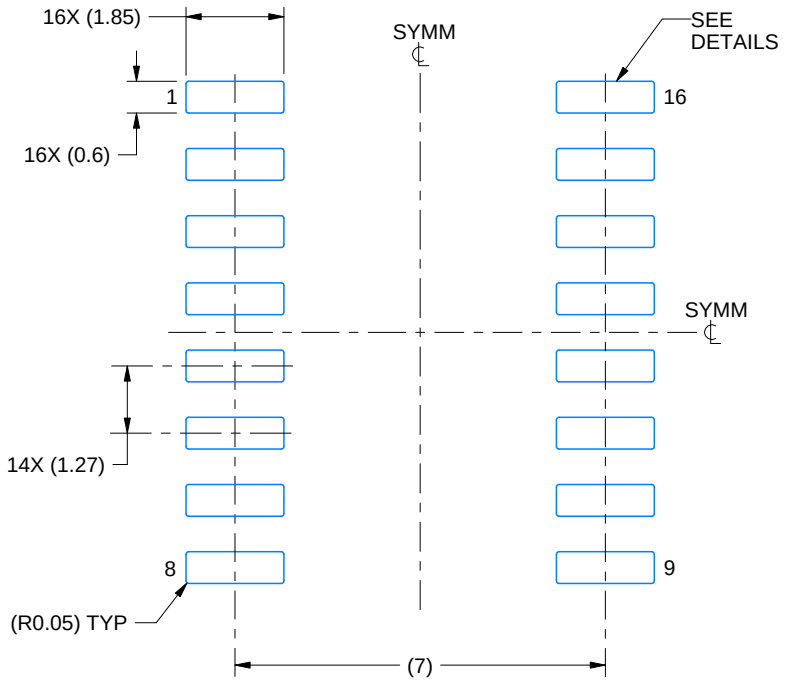

LAND PATTERN EXAMPLE
SCALE:7X

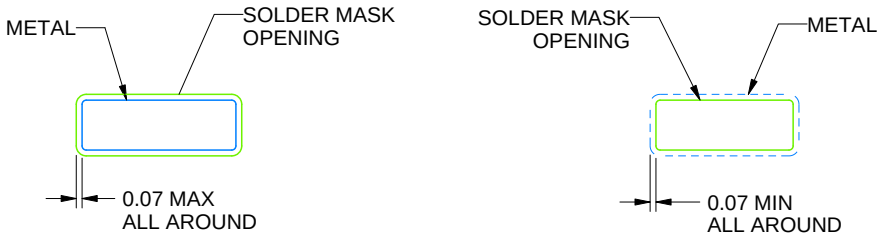

NON SOLDER MASK DEFINED

SOLDER MASK DEFINED

SOLDER MASK DETAILS

4220735/A 12/2021

NOTES: (continued)

5. Publication IPC-7351 may have alternate designs.
6. Solder mask tolerances between and around signal pads can vary based on board fabrication site.

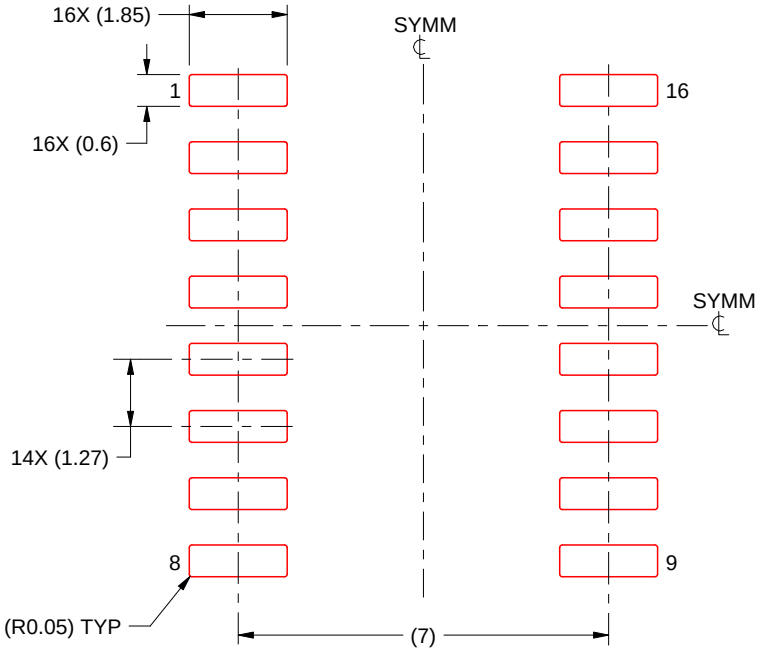

SOLDER PASTE EXAMPLE
BASED ON 0.125 mm THICK STENCIL
SCALE:7X

4220735/A 12/2021

NOTES: (continued)

7. Laser cutting apertures with trapezoidal walls and rounded corners may offer better paste release. IPC-7525 may have alternate design recommendations.
8. Board assembly site may have different recommendations for stencil design.

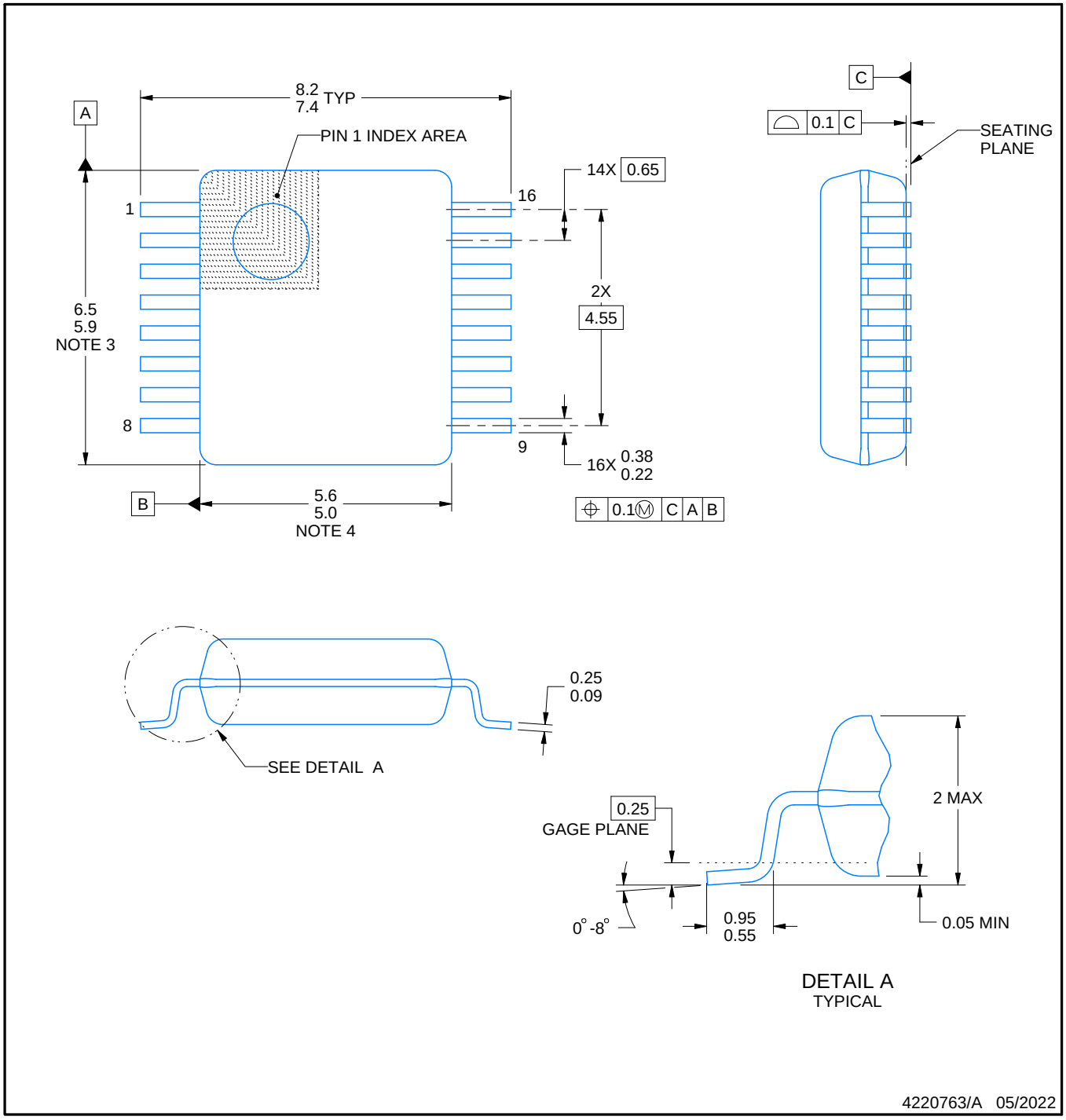

NOTES:

1. All linear dimensions are in millimeters. Any dimensions in parenthesis are for reference only. Dimensioning and tolerancing per ASME Y14.5M.
2. This drawing is subject to change without notice.
3. This dimension does not include mold flash, protrusions, or gate burrs. Mold flash, protrusions, or gate burrs shall not exceed 0.15 mm per side.
4. Reference JEDEC registration MO-150.

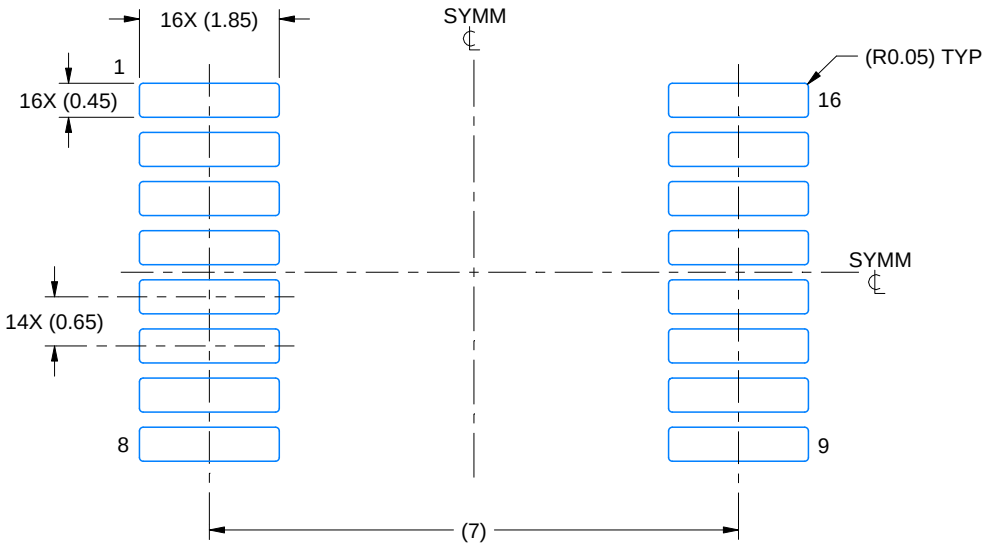

LAND PATTERN EXAMPLE
EXPOSED METAL SHOWN
SCALE: 10X

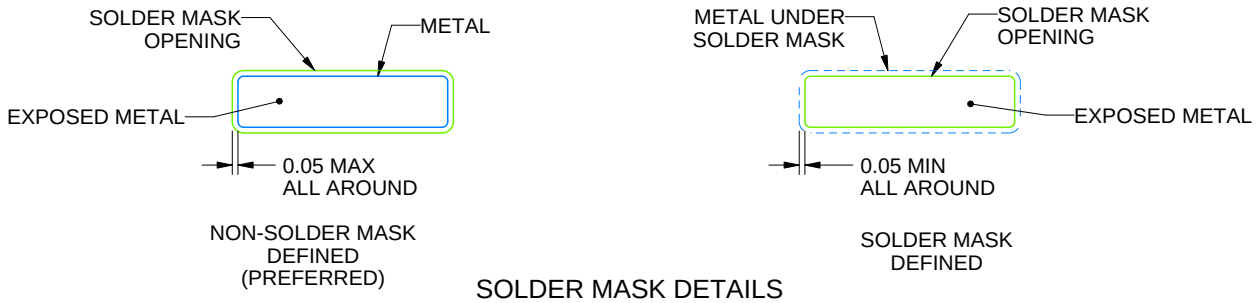

SOLDER MASK DETAILS

4220763/A 05/2022

NOTES: (continued)

5. Publication IPC-7351 may have alternate designs.
6. Solder mask tolerances between and around signal pads can vary based on board fabrication site.

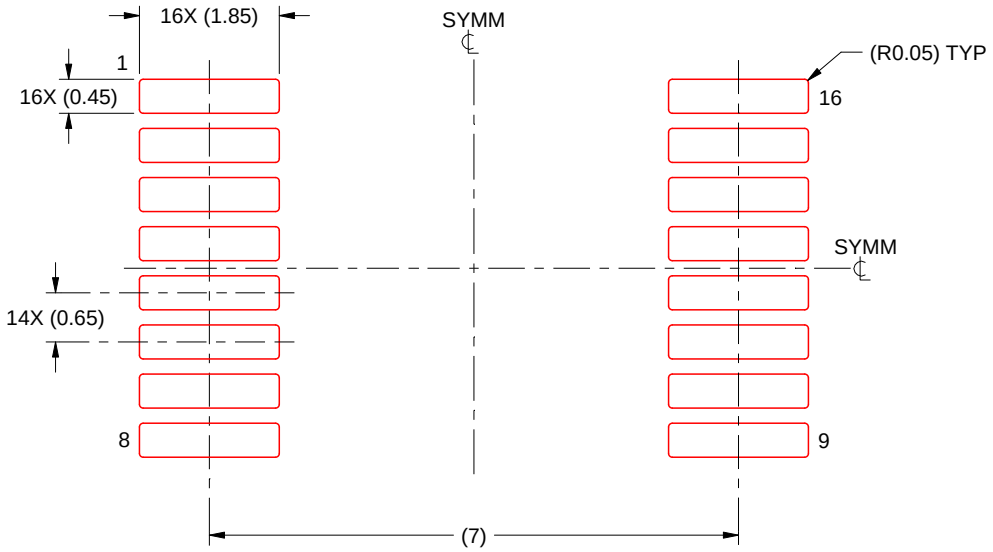

SOLDER PASTE EXAMPLE
BASED ON 0.125 mm THICK STENCIL
SCALE: 10X

4220763/A 05/2022

NOTES: (continued)

7. Laser cutting apertures with trapezoidal walls and rounded corners may offer better paste release. IPC-7525 may have alternate design recommendations.
8. Board assembly site may have different recommendations for stencil design.

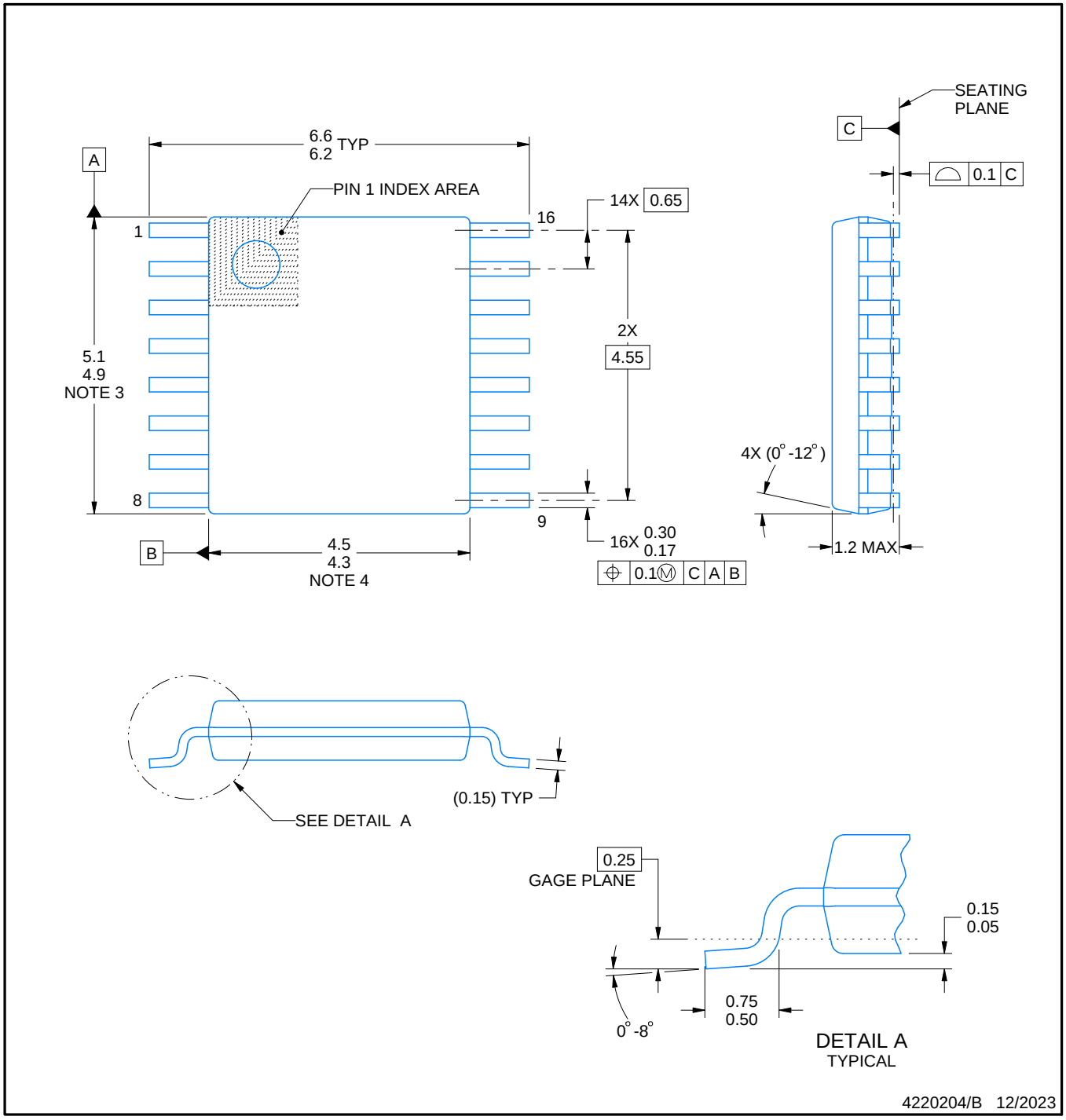

NOTES:

1. All linear dimensions are in millimeters. Any dimensions in parenthesis are for reference only. Dimensioning and tolerancing per ASME Y14.5M.
2. This drawing is subject to change without notice.
3. This dimension does not include mold flash, protrusions, or gate burrs. Mold flash, protrusions, or gate burrs shall not exceed 0.15 mm per side.
4. This dimension does not include interlead flash. Interlead flash shall not exceed 0.25 mm per side.
5. Reference JEDEC registration MO-153.

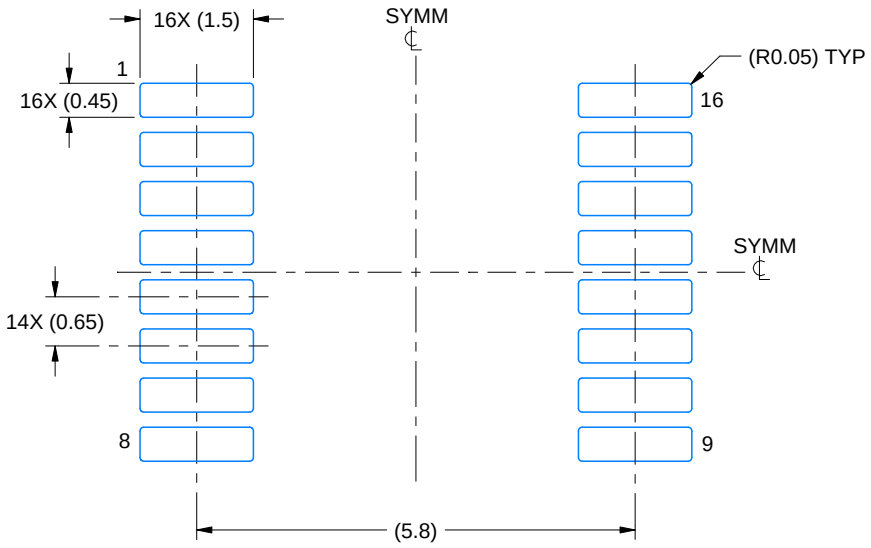

LAND PATTERN EXAMPLE
EXPOSED METAL SHOWN
SCALE: 10X

NON-SOLDER MASK DEFINED (PREFERRED)

SOLDER MASK DEFINED

SOLDER MASK DETAILS

4220204/B 12/2023

NOTES: (continued)

6. Publication IPC-7351 may have alternate designs.
7. Solder mask tolerances between and around signal pads can vary based on board fabrication site.

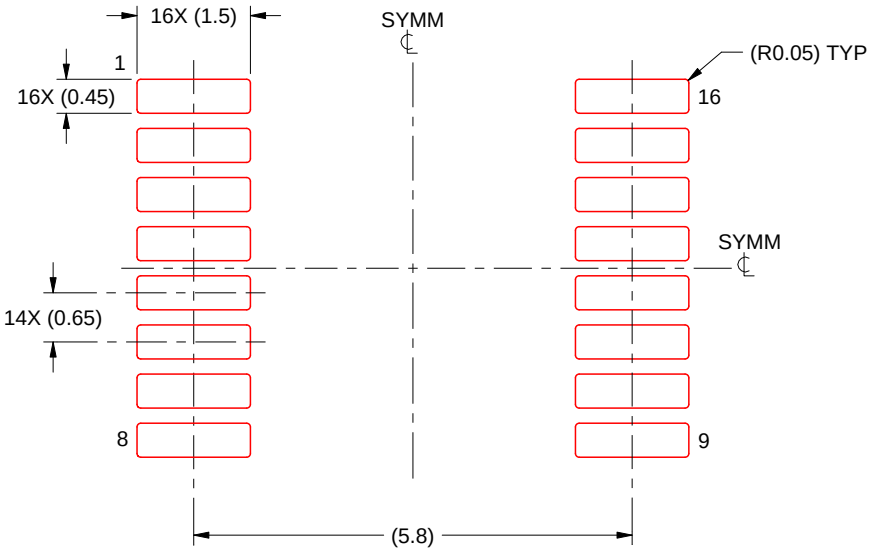

SOLDER PASTE EXAMPLE
BASED ON 0.125 mm THICK STENCIL
SCALE: 10X

4220204/B 12/2023

NOTES: (continued)

8. Laser cutting apertures with trapezoidal walls and rounded corners may offer better paste release. IPC-7525 may have alternate design recommendations.
9. Board assembly site may have different recommendations for stencil design.

N (R–PDIP–T**) PLASTIC DUAL–IN–LINE PACKAGE

16 PINS SHOWN

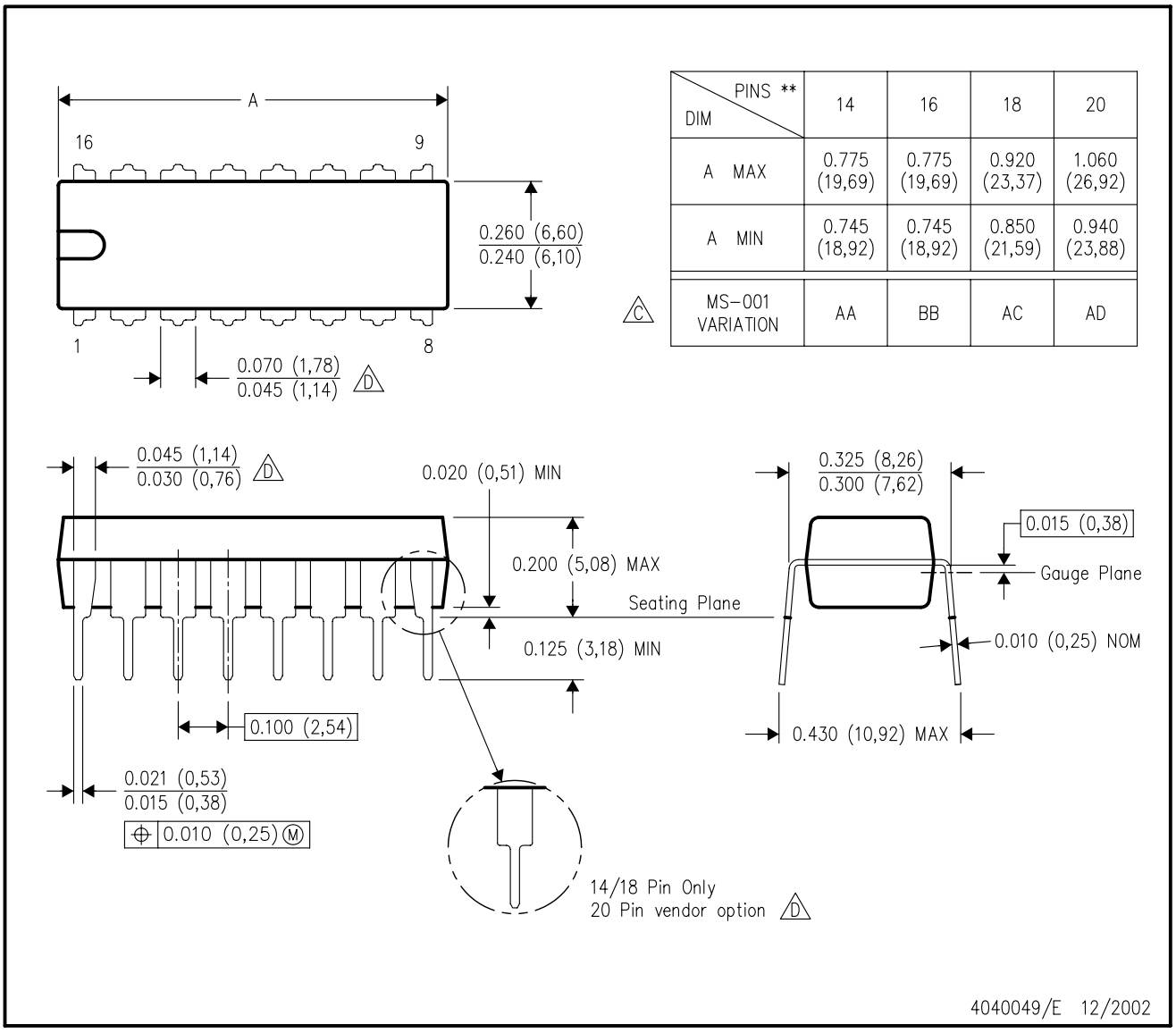

DIM \ PINS **	14	16	18	20
A MAX	0.775 (19,69)	0.775 (19,69)	0.920 (23,37)	1.060 (26,92)
A MIN	0.745 (18,92)	0.745 (18,92)	0.850 (21,59)	0.940 (23,88)
MS–001 VARIATION (C)	AA	BB	AC	AD

NOTES:
A. All linear dimensions are in inches (millimeters).
B. This drawing is subject to change without notice.
C. Falls within JEDEC MS–001, except 18 and 20 pin minimum body length (Dim A).
D. The 20 pin end lead shoulder width is a vendor option, either half or full width.

重要通知和免责声明

TI“按原样”提供技术和可靠性数据（包括数据表）、设计资源（包括参考设计）、应用或其他设计建议、网络工具、安全信息和其他资源，不保证没有瑕疵且不做出任何明示或暗示的担保，包括但不限于对适销性、与某特定用途的适用性或不侵犯任何第三方知识产权的暗示担保。

这些资源可供使用 TI 产品进行设计的熟练开发人员使用。您将自行承担以下全部责任：(1) 针对您的应用选择合适的 TI 产品，(2) 设计、验证并测试您的应用，(3) 确保您的应用满足相应标准以及任何其他安全、安保法规或其他要求。

这些资源如有变更，恕不另行通知。TI 授权您仅可将这些资源用于研发本资源所述的 TI 产品的相关应用。严禁以其他方式对这些资源进行复制或展示。您无权使用任何其他 TI 知识产权或任何第三方知识产权。对于因您对这些资源的使用而对 TI 及其代表造成的任何索赔、损害、成本、损失和债务，您将全额赔偿，TI 对此概不负责。

TI 提供的产品受 TI 销售条款)、TI 通用质量指南 或 ti.com 上其他适用条款或 TI 产品随附的其他适用条款的约束。TI 提供这些资源并不会扩展或以其他方式更改 TI 针对 TI 产品发布的适用的担保或担保免责声明。 除非德州仪器 (TI) 明确将某产品指定为定制产品或客户特定产品，否则其产品均为按确定价格收入目录的标准通用器件。

TI 反对并拒绝您可能提出的任何其他或不同的条款。

版权所有 © 2026，德州仪器 (TI) 公司

最后更新日期：2025 年 10 月