LVDS SERDES RECEIVER

FEATURES

- **4:28 Data Channel Expansion at up to 1.904 Gigabits per Second Throughput**
- **Suited for Point-to-Point Subsystem Communication With Very Low EMI**
- **4 Data Channels and Clock Low-Voltage Differential Channels in and 28 Data and Clock Out Low-Voltage TTL Channels Out**
- **Operates From a Single 3.3-V Supply and 250 mW (Typ)**
- **5-V Tolerant $\overline{\text{SHTDN}}$ Input**
- **Rising Clock Edge Triggered Outputs**
- **Bus Pins Tolerate 4-kV HBM ESD**
- **Packaged in Thin Shrink Small-Outline Package With 20 Mil Terminal Pitch**
- **Consumes <1 mW When Disabled**
- **Wide Phase-Lock Input Frequency Range 20 MHz to 68 MHz**
- **No External Components Required for PLL**
- **Meets or Exceeds the Requirements of ANSI EIA/TIA-644 Standard**
- **Industrial Temperature Qualified T_A = -40°C to 85°C**
- **Replacement for the DS90CR286**

DGG PACKAGE (TOP VIEW)

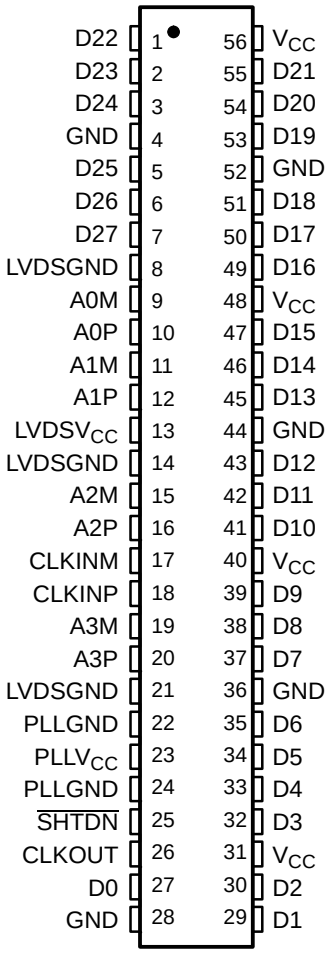

DESCRIPTION

The SN65LVDS94 LVDS serdes (serializer/deserializer) receiver contains four serial-in 7-bit parallel-out shift registers, a 7× clock synthesizer, and five low-voltage differential signaling (LVDS) line receivers in a single integrated circuit. These functions allow receipt of synchronous data from a compatible transmitter, such as the SN65LVDS93 and SN65LVDS95, over five balanced-pair conductors and expansion to 28 bits of single-ended LVTTL synchronous data at a lower transfer rate.

When receiving, the high-speed LVDS data is received and loaded into registers at the rate seven times the LVDS input clock (CLKIN). The data is then unloaded to a 28-bit wide LVTTL parallel bus at the CLKIN rate. A phase-locked loop clock synthesizer circuit generates a 7× clock for internal clocking and an output clock for the expanded data. The SN65LVDS94 presents valid data on the rising edge of the output clock (CLKOUT).

Please be aware that an important notice concerning availability, standard warranty, and use in critical applications of Texas Instruments semiconductor products and disclaimers thereto appears at the end of this data sheet.

PRODUCTION DATA information is current as of publication date. Products conform to specifications per the terms of the Texas Instruments standard warranty. Production processing does not necessarily include testing of all parameters.

Copyright © 1998–2006, Texas Instruments Incorporated

These devices have limited built-in ESD protection. The leads should be shorted together or the device placed in conductive foam during storage or handling to prevent electrostatic damage to the MOS gates.

DESCRIPTION (CONTINUED)

The SN65LVDS94 requires only five line termination resistors for the differential inputs and little or no control. The data bus appears the same at the input to the transmitter and output of the receiver with the data transmission transparent to the user(s). The only user intervention is the possible use of the shutdown/clear ($\overline{SHTDN}$) active-low input to inhibit the clock and shut off the LVDS receivers for lower power consumption. A low level on this signal clears all internal registers to a low level.

The SN65LVDS94 is characterized for operation over ambient air temperatures of -40°C to 85°C.

FUNCTIONAL BLOCK DIAGRAM

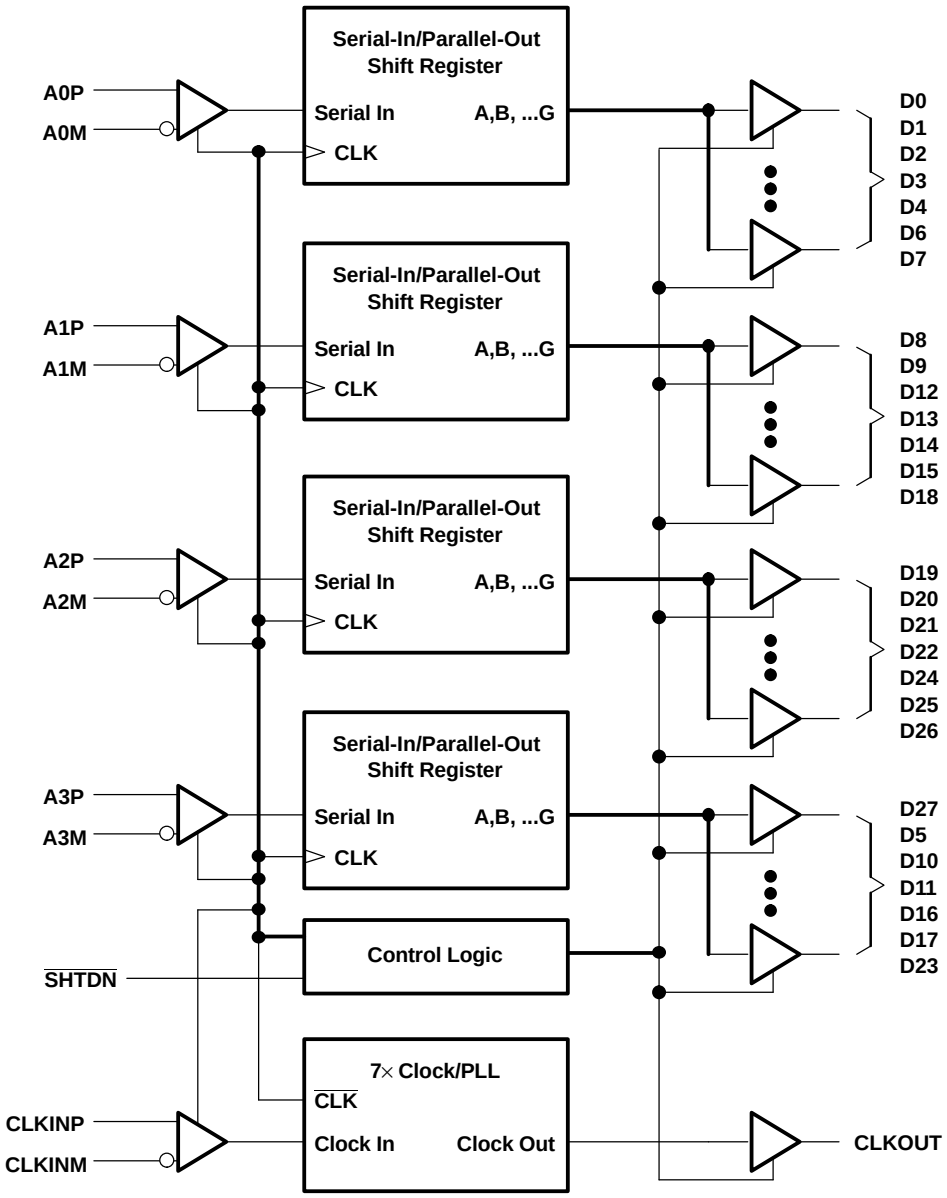

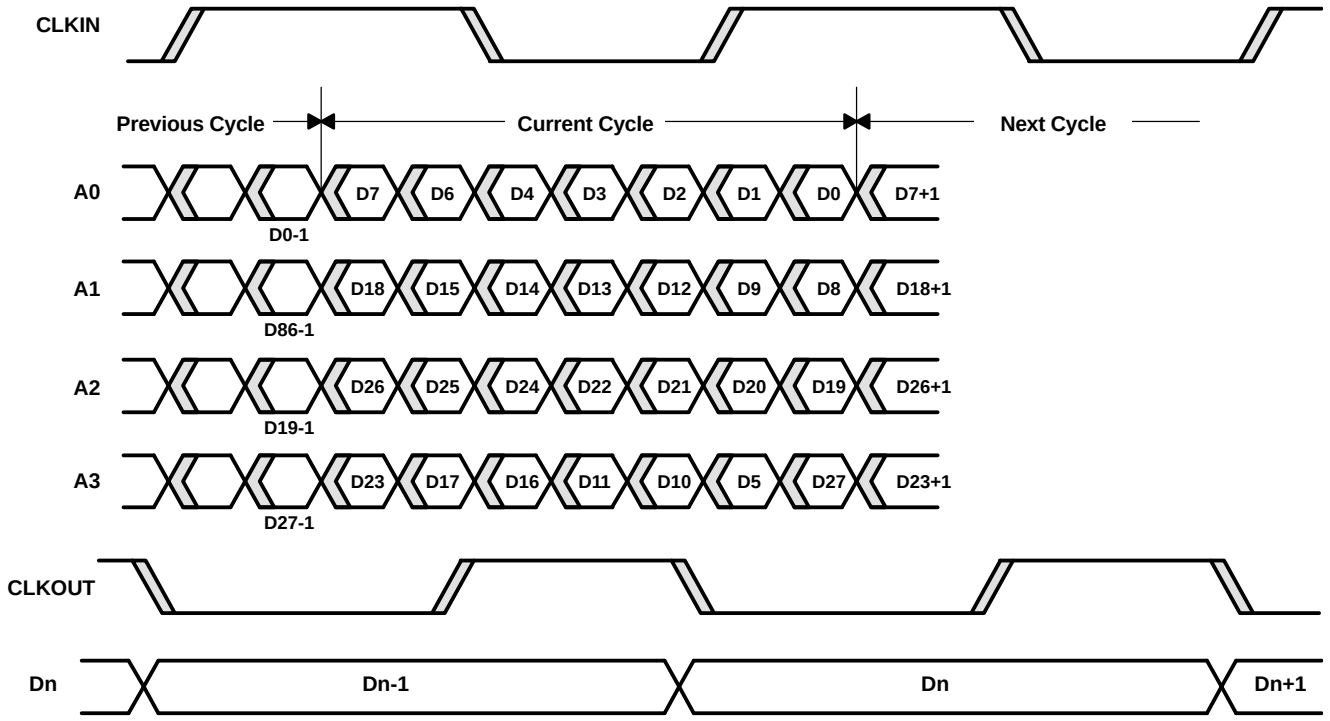

Figure 1. SN65LVDS94 Load and Shift Sequences

EQUIVALENT INPUT AND OUTPUT SCHEMATIC DIAGRAMS

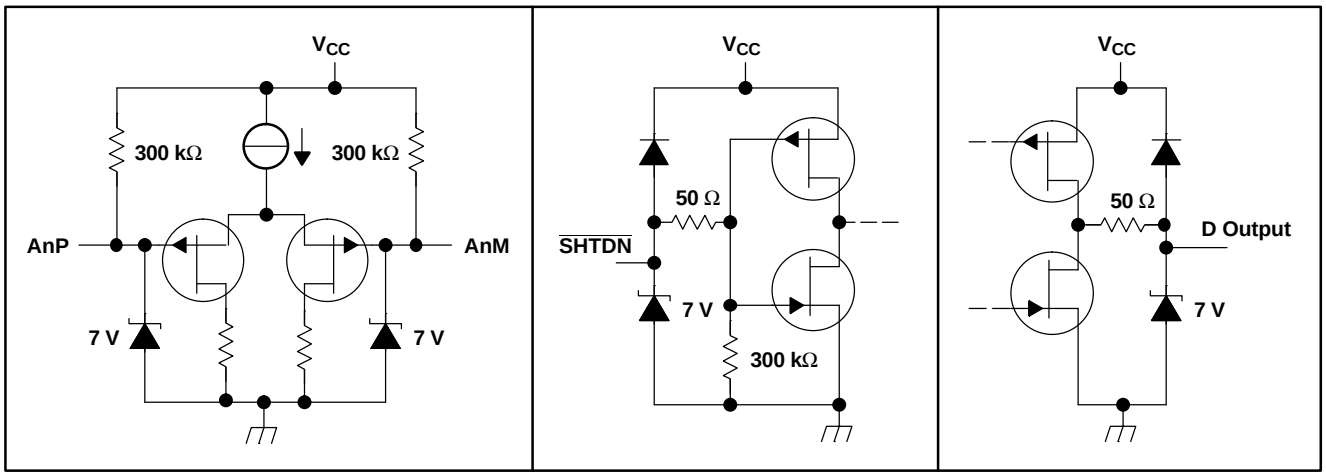

ABSOLUTE MAXIMUM RATINGS

over operating free-air temperature (unless otherwise noted) (1)

			UNIT
V_{CC} (2)	Supply voltage range		-0.3 V to 4 V
	Voltage range at any terminal (except $\overline{SHTDN}$)		-0.5 V to V_{CC} + 0.5 V
	Voltage range at $\overline{SHTDN}$ terminal		-0.5 V to V_{CC} + 3 V
	Electrostatic discharge (3)	Bus pins (Class 3A)	4 KV
		Bus pins (Class 2B)	200 V
		All pins (Class 3A)	3 KV
		All pins (Class 2B)	200 V
	Continuous total power dissipation		(see Dissipation Rating Table)
T_A	Operating free-air temperature range		-40°C to 85°C
T_{stg}	Storage temperature range		-65°C to 150°C
	Lead temperature 1,6 mm (1/16 inch) from case for 10 seconds		260°C

(1) Stresses beyond those listed under absolute maximum ratings may cause permanent damage to the device. These are stress ratings only, and functional operation of the device at these or any other conditions beyond those indicated under recommended operating conditions is not implied. Exposure to absolute-maximum-rated conditions for extended periods may affect device reliability.
(2) All voltage values are with respect to the GND terminals unless otherwise noted.
(3) This rating is measured using MIL-STD-883C Method, 3015.7.

DISSIPATION RATING TABLE

PACKAGE	$T_A \leq$ 25°C POWER RATING	DERATING FACTOR (1) ABOVE T_A = 25°C	T_A = 70°C POWER RATING	T_A = 85°C POWER RATING
DGG	1377 mW	11 mW/°C	882 mW	717 mW

(1) This is the inverse of the junction-to-ambient thermal resistance when board-mounted and with no air flow.

RECOMMENDED OPERATING CONDITIONS

		MIN	NOM	MAX	UNIT
V_{CC}	Supply voltage	3	3.3	3.6	V
V_{IH}	High-level input voltage ($\overline{SHTDN}$)	2			
V_{IL}	Low-level input voltage ($\overline{SHTDN}$)			0.8	
$\|V_{ID}\|$	Magnitude of differential input voltage	0.1		0.6	
V_{IC}, see Figure 2 and Figure 3	Common-mode input voltage	$\frac{\|V_{ID}\|}{2}$		$2.4 - \frac{\|V_{ID}\|}{2}$	
				V_{CC}-0.8	
T_A	Operating free-air temperature	-40		85	°C

TIMING REQUIREMENTS

		MIN	NOM	MAX	UNIT
t_c (1)	Input clock period	14.7	t_c	50	ns

(1) t_c is defined as the mean duration of a minimum of 32,000 clock periods.

ELECTRICAL CHARACTERISTICS

over recommended operating conditions (unless otherwise noted)

PARAMETER		TEST CONDITIONS	MIN	TYP(1)	MAX	UNIT
V_{IT+}	Positive-going differential input voltage threshold				100	mV
V_{IT-}	Negative-going differential input voltage threshold(2)		-100			mV
V_{OH}	High-level output voltage	I_{OH} = -4 mA	2.4			V
V_{OL}	Low-level output voltage	I_{OL} = 4 mA			0.4	V
I_{CC}	Quiescent current (average)	Disabled, all inputs open			280	µA
		Enabled, AnP at 1 V and AnM at 1.4 V, t_c = 15.38 ns		62	84	mA
		Enabled, C_L = 8 pF (5 places), Worst-case pattern, see Figure 4, t_c = 15.38 ns		107		mA
I_{IH}	High-level input current ($\overline{SHTDN}$)	$V_{IH} = V_{CC}$			±20	µA
I_{IL}	Low-level input current ($\overline{SHTDN}$)	V_{IL} = 0 V			±20	µA
I_{IN}	Input current (A and CLKIN inputs)	0 V ≤ V_I ≤ 2.4 V			±20	µA
I_{OZ}	High-impedance output current	V_O = 0 V or V_{CC}			±10	µA

(1) All typical values are V_{CC} = 3.3 V, T_A = 25°C.
(2) The algebraic convention, in which the less-positive (more-negative) limit is designated minimum, is used in this data sheet for the negative-going input voltage threshold only.

SWITCHING CHARACTERISTICS

over recommended operating conditions (unless otherwise noted)

PARAMETER		TEST CONDITIONS		MIN	TYP(1)	MAX	UNIT
t_{su}	Data setup time, D0 through D27 to CLKOUT	C_L = 8 pF	See Figure 5	4	6		ns
t_h	Data hold time, CLKOUT to D0 through D27	C_L = 8 pF	See Figure 5	4	6		ns
t_{RSKM}	Receiver input skew margin(1), see Figure 6	t_c = 15.38 ns (±0.2%), |Input clock jitter| <50 ps(2)	T_A = 0°C to 85°C	490	800		ps
			T_A = -40°C to 0°C	390			ps
t_d	Delay time, input clock to output clock, see Figure 6	t_c = 15.38 ns (±0.2%)			3.7		ns
$\Delta t_{C(O)}$	Change in output clock period from cycle to cycle(3)	t_c = 15.38 + 0.75 sin (2π500E3t)±0.05 ns, See Figure 7			±80		ps
		t_c = 15.38 + 0.75 sin (2≠3E6t) ±0.05 ns, See Figure 7			±300		ps
t_{en}	Enable time, $\overline{SHTDN}$ to phase lock	See Figure 8			1		ms
t_{dis}	Disable time, $\overline{SHTDN}$ to Off state	See Figure 9			400		ns
t_t	Output transition time (t_r or t_f)	C_L = 8 pF			3		ns
t_w	Output clock pulse duration				0.43 t_c		ns

(1) t_{RSKM} is the timing margin available to allocate to the transmitter and interconnection skews and clock jitter. It is defined by $\frac{t_C}{14} - ts/h$.
(2) |Input clock jitter| is the magnitude of the change in the input clock period.
(3) $\Delta t_{C(O)}$ is the change in the output clock period from one cycle to the next cycle observed over 15,000 cycles.

PARAMETER MEASUREMENT INFORMATION

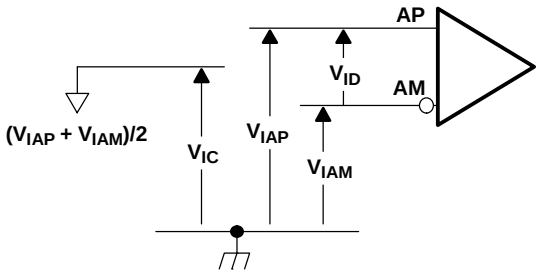

Figure 2. Voltage Definitions

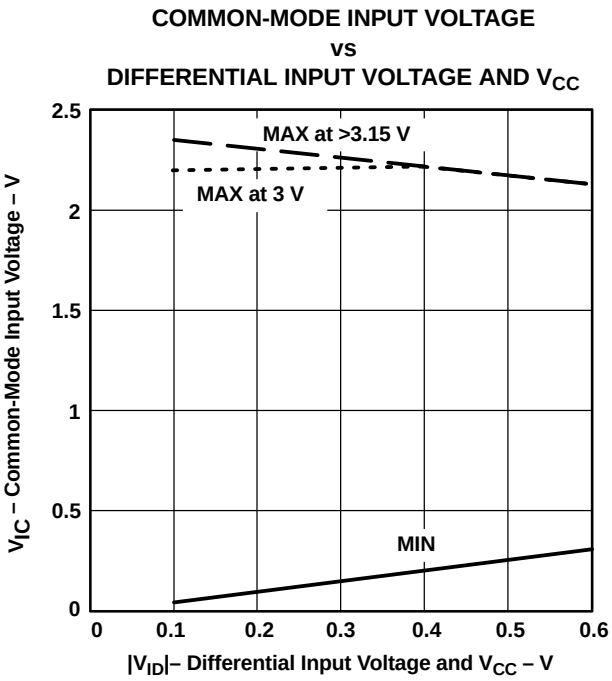

Figure 3. Recommended V_{IC} Versus V_{ID} and V_{CC}

PARAMETER MEASUREMENT INFORMATION (continued)

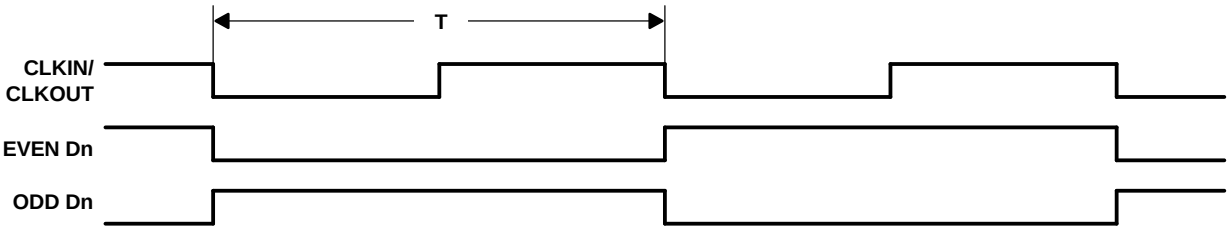

Figure 4. Worst-Case Power Test Pattern

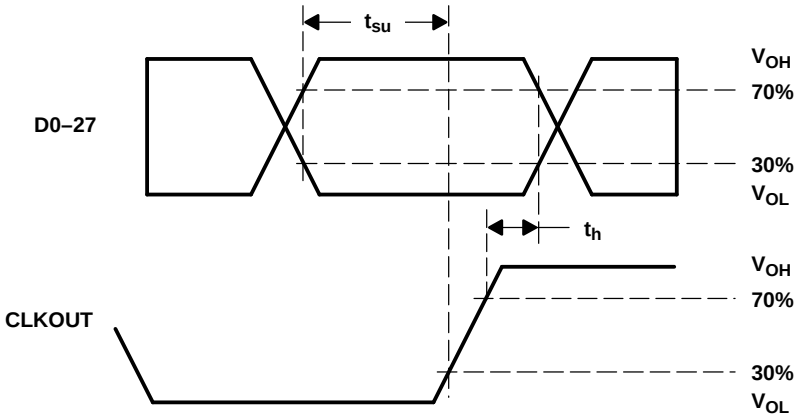

Figure 5. Setup and Hold Time Measurements

PARAMETER MEASUREMENT INFORMATION (continued)

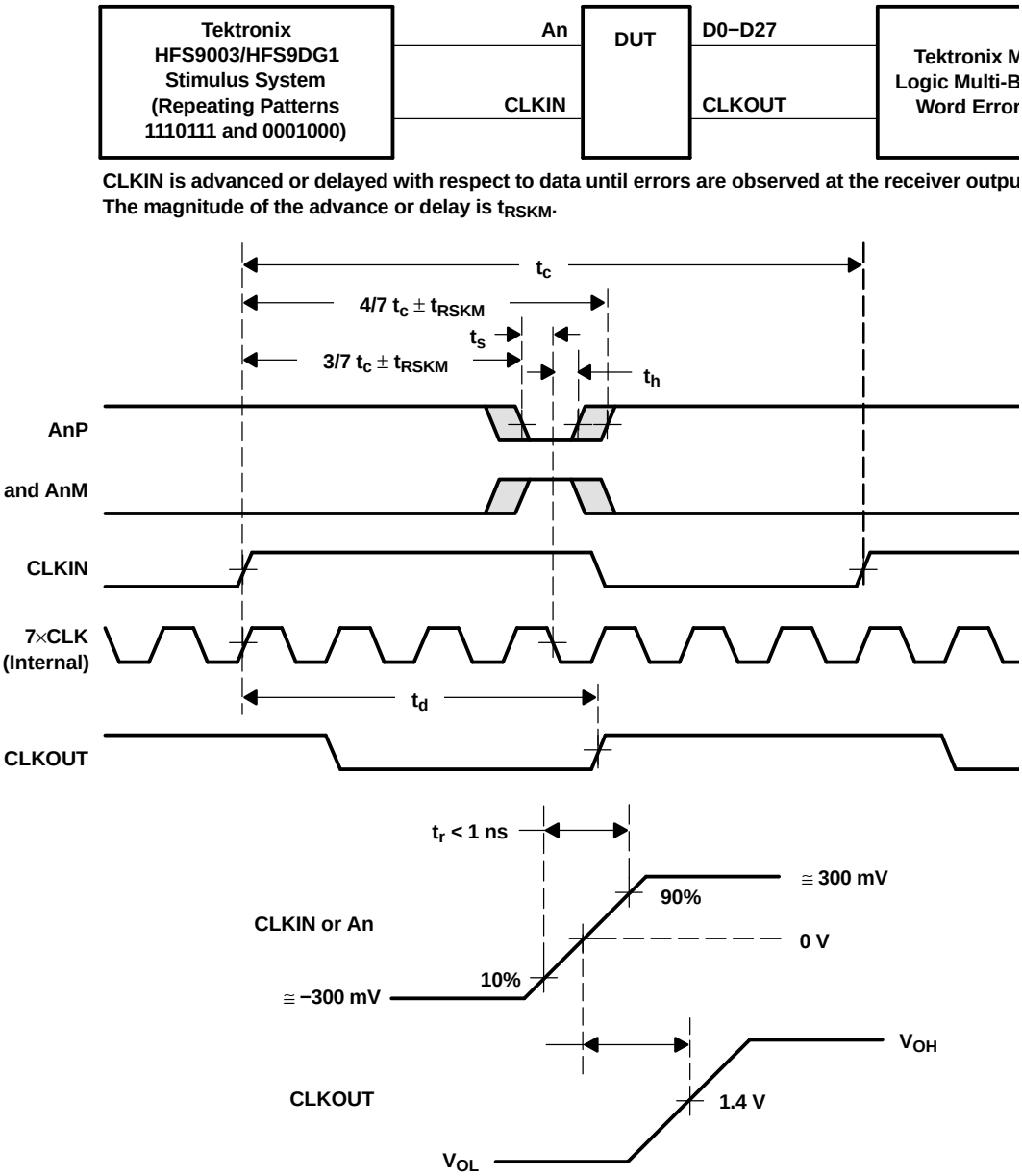

Figure 6. Receiver Input Skew Margin and t_d Definitions

PARAMETER MEASUREMENT INFORMATION (continued)

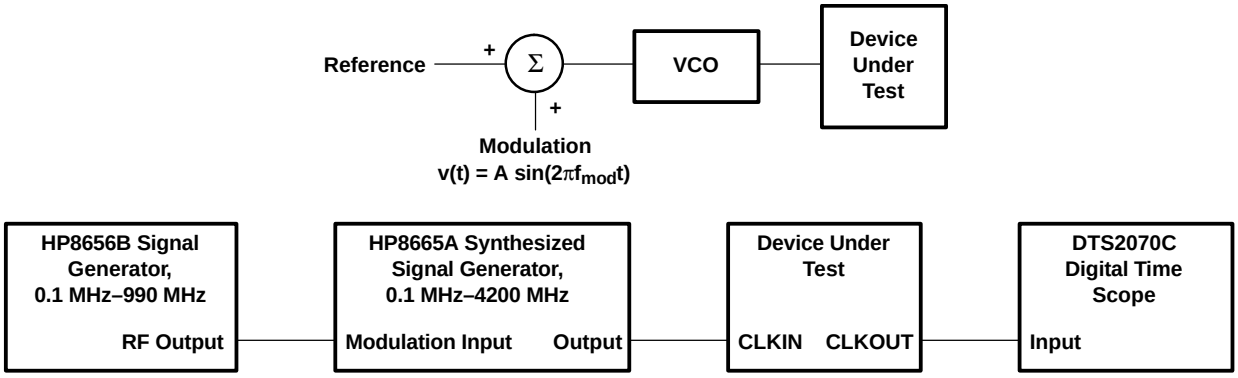

Figure 7. Output Clock Jitter Test Setup

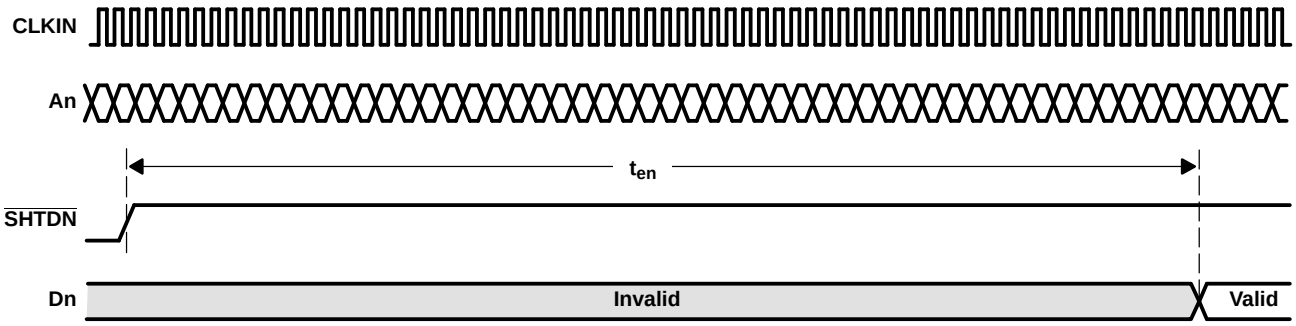

Figure 8. Enable Time Waveforms

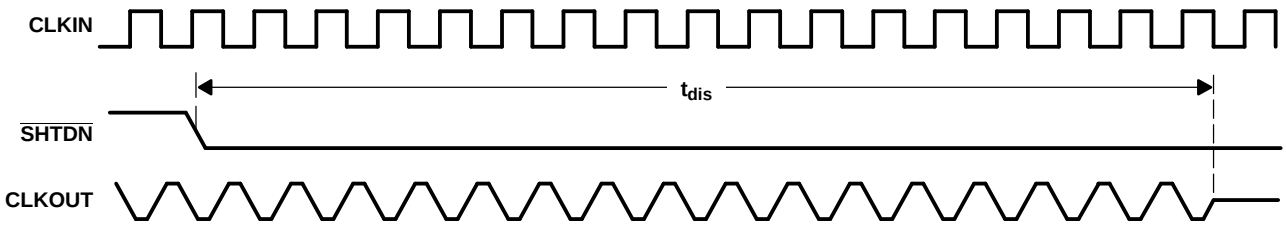

Figure 9. Disable Time Waveforms

TYPICAL CHARACTERISTICS

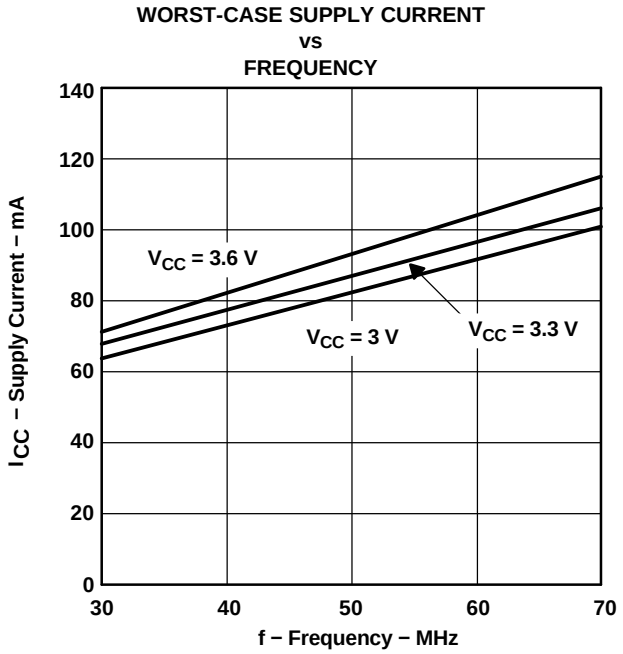

Figure 10.

APPLICATION INFORMATION

16-BIT BUS EXTENSION

In a 16-bit bus application (Figure 11), TTL data and clock coming from bus transceivers that interface the backplane bus arrive at the Tx parallel inputs of the LVDS serdes transmitter. The clock associated with the bus is also connected to the device. The on-chip PLL synchronizes this clock with the parallel data at the input. The data is then multiplexed into three different line drivers which perform the TTL to LVDS conversion. The clock is also converted to LVDS and presented to a separate driver. This synchronized LVDS data and clock at the receiver, which recovers the LVDS data and clock, performs a conversion back to TTL. Data is then demultiplexed into a parallel format. An on-chip PLL synchronizes the received clock with the parallel data, and then all are presented to the parallel output port of the receiver.

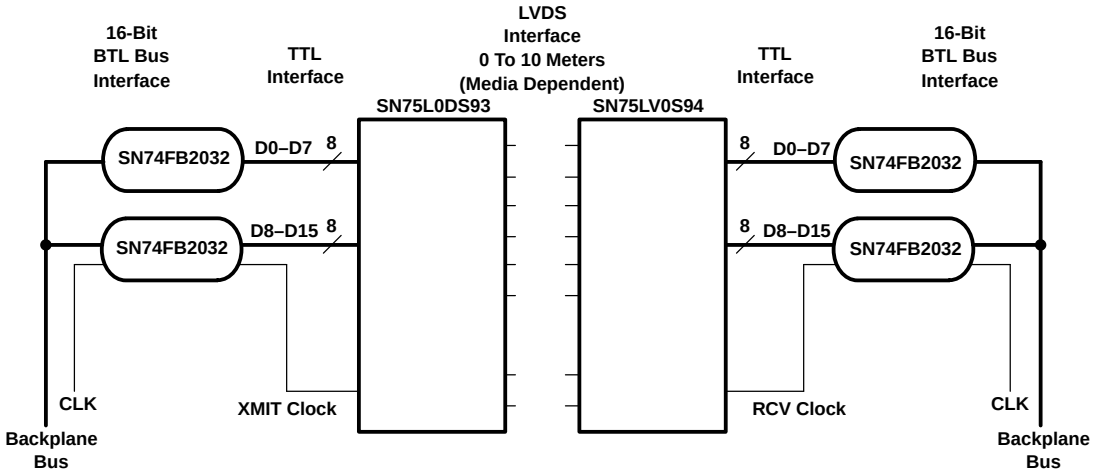

Figure 11. 16-Bit Bus Extension

16-BIT BUS EXTENSION WITH PARITY

In the previous application we did not have a checking bit that would provide assurance that the data crosses the link. If we add a parity bit to the previous example, we would have a diagram similar to the one in Figure 12. The device following the SN74FB2032 is a low cost parity generator. Each transmit-side transceiver/parity generator takes the LVTTL data from the corresponding transceiver, performs a parity calculation over the byte, and then passes the bits with its calculated parity value on the parallel input of the LVDS serdes transmitter. Again, the on-chip PLL synchronizes this transmit clock with the eighteen parallel bits (16 data + 2 parity) at the input. The synchronized LVDS data/parity and clock arrive at the receiver.

The receiver performs the conversion from LVDS to LVTTL and the transceiver/parity generator performs the parity calculations. These devices compare their corresponding input bytes with the value received on the parity bit. The transceiver/parity generator will assert its parity error output if a mismatch is detected.

APPLICATION INFORMATION (continued)

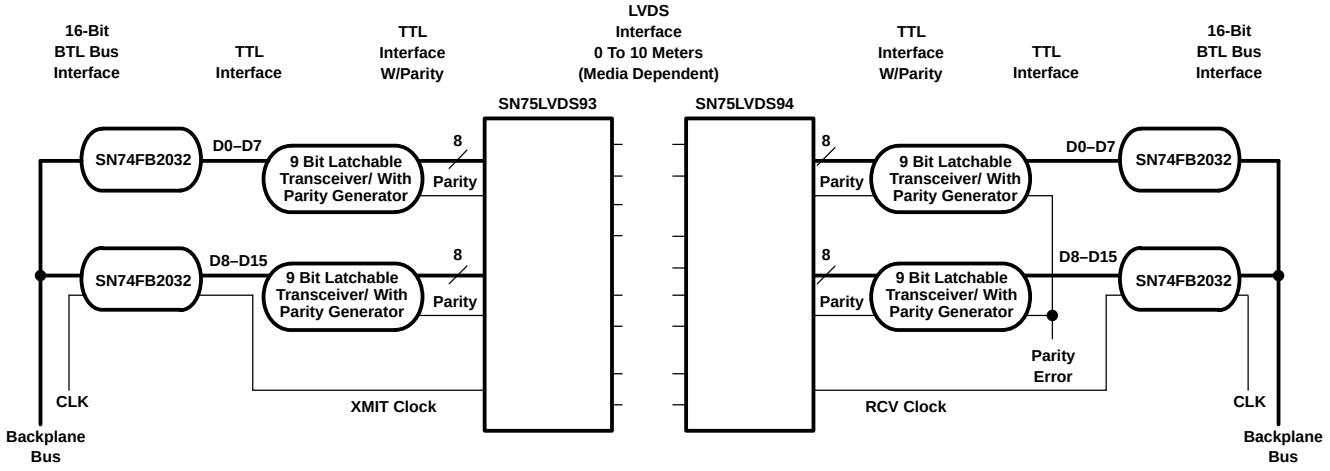

Figure 12. 16-Bit Bus Extension With Parity

LOW COST VIRTUAL BACKPLANE TRANSCEIVER

Figure 13 represents LVDS serdes in an application as a virtual backplane transceiver (VBT). The concept of a VBT can be achieved by implementing individual LVDS serdes chipsets in both directions of subsystem serialized links.

Depending on the application, the designer will face varying choices when implementing a VBT. In addition to the devices shown in Figure 13, functions such as parity and delay lines for control signals could be included. Using additional circuitry, half-duplex or full-duplex operation can be achieved by configuring the clock and control lines properly.

The designer may choose to implement an independent clock oscillator at each end of the link and then use a PLL to synchronize LVDS serdes's parallel I/O to the backplane bus. Resynchronizing FIFOs may also be required.

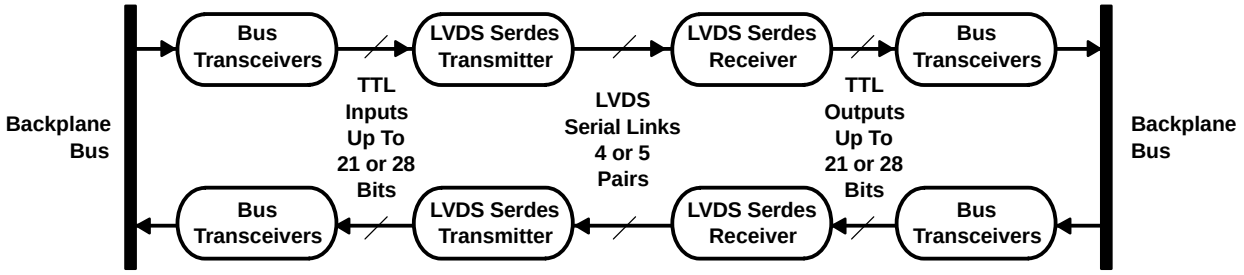

Figure 13. Virtual Backplane Transceiver

PACKAGING INFORMATION

Orderable part number	Status (1)	Material type (2)	Package | Pins	Package qty | Carrier	RoHS (3)	Lead finish/ Ball material (4)	MSL rating/ Peak reflow (5)	Op temp (°C)	Part marking (6)
SN65LVDS94DGG	Active	Production	TSSOP (DGG) | 56	35 | TUBE	Yes	NIPDAU	Level-2-260C-1 YEAR	-	SN65LVDS94
SN65LVDS94DGG.B	Active	Production	TSSOP (DGG) | 56	35 | TUBE	Yes	NIPDAU	Level-2-260C-1 YEAR	-40 to 85	SN65LVDS94
SN65LVDS94DGGR	Active	Production	TSSOP (DGG) | 56	2000 | LARGE T&R	Yes	NIPDAU	Level-2-260C-1 YEAR	-40 to 85	SN65LVDS94
SN65LVDS94DGGR.B	Active	Production	TSSOP (DGG) | 56	2000 | LARGE T&R	Yes	NIPDAU	Level-2-260C-1 YEAR	-40 to 85	SN65LVDS94
SN65LVDS94DGGR1G4	Active	Production	TSSOP (DGG) | 56	2000 | LARGE T&R	Yes	NIPDAU	Level-2-260C-1 YEAR	-40 to 85	SN65LVDS94
SN65LVDS94DGGR1G4.B	Active	Production	TSSOP (DGG) | 56	2000 | LARGE T&R	Yes	NIPDAU	Level-2-260C-1 YEAR	-40 to 85	SN65LVDS94

(1) **Status:** For more details on status, see our product life cycle.

(2) **Material type:** When designated, preproduction parts are prototypes/experimental devices, and are not yet approved or released for full production. Testing and final process, including without limitation quality assurance, reliability performance testing, and/or process qualification, may not yet be complete, and this item is subject to further changes or possible discontinuation. If available for ordering, purchases will be subject to an additional waiver at checkout, and are intended for early internal evaluation purposes only. These items are sold without warranties of any kind.

(3) **RoHS values:** Yes, No, RoHS Exempt. See the TI RoHS Statement for additional information and value definition.

(4) **Lead finish/Ball material:** Parts may have multiple material finish options. Finish options are separated by a vertical ruled line. Lead finish/Ball material values may wrap to two lines if the finish value exceeds the maximum column width.

(5) **MSL rating/Peak reflow:** The moisture sensitivity level ratings and peak solder (reflow) temperatures. In the event that a part has multiple moisture sensitivity ratings, only the lowest level per JEDEC standards is shown. Refer to the shipping label for the actual reflow temperature that will be used to mount the part to the printed circuit board.

(6) **Part marking:** There may be an additional marking, which relates to the logo, the lot trace code information, or the environmental category of the part.

Multiple part markings will be inside parentheses. Only one part marking contained in parentheses and separated by a "~" will appear on a part. If a line is indented then it is a continuation of the previous line and the two combined represent the entire part marking for that device.

Important Information and Disclaimer: The information provided on this page represents TI's knowledge and belief as of the date that it is provided. TI bases its knowledge and belief on information provided by third parties, and makes no representation or warranty as to the accuracy of such information. Efforts are underway to better integrate information from third parties. TI has taken and continues to take reasonable steps to provide representative and accurate information but may not have conducted destructive testing or chemical analysis on incoming materials and chemicals. TI and TI suppliers consider certain information to be proprietary, and thus CAS numbers and other limited information may not be available for release.

In no event shall TI's liability arising out of such information exceed the total purchase price of the TI part(s) at issue in this document sold by TI to Customer on an annual basis.

TAPE AND REEL INFORMATION

REEL DIMENSIONS

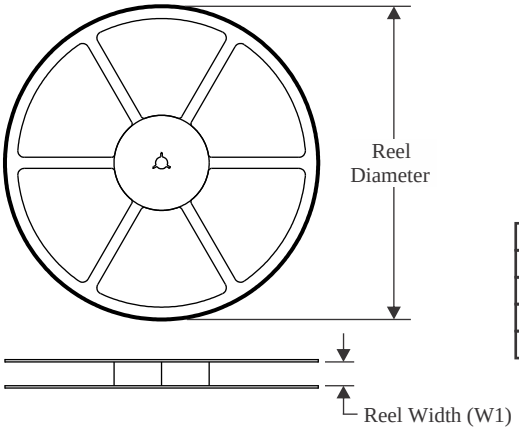

TAPE DIMENSIONS

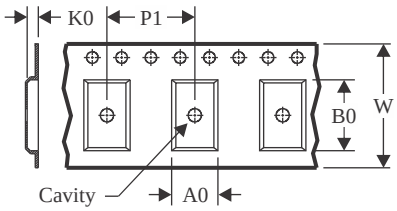

A0	Dimension designed to accommodate the component width
B0	Dimension designed to accommodate the component length
K0	Dimension designed to accommodate the component thickness
W	Overall width of the carrier tape
P1	Pitch between successive cavity centers

QUADRANT ASSIGNMENTS FOR PIN 1 ORIENTATION IN TAPE

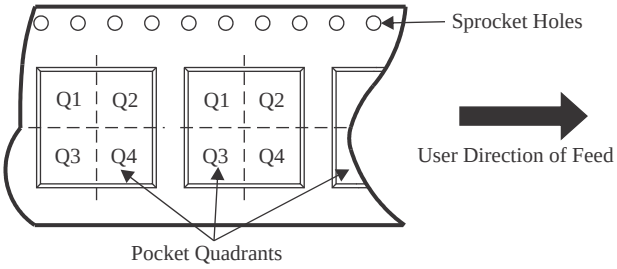

*All dimensions are nominal

Device	Package Type	Package Drawing	Pins	SPQ	Reel Diameter (mm)	Reel Width W1 (mm)	A0 (mm)	B0 (mm)	K0 (mm)	P1 (mm)	W (mm)	Pin1 Quadrant
SN65LVDS94DGGR	TSSOP	DGG	56	2000	330.0	24.4	8.6	15.6	1.8	12.0	24.0	Q1
SN65LVDS94DGGR1G4	TSSOP	DGG	56	2000	330.0	24.4	8.6	15.6	1.8	12.0	24.0	Q1

TAPE AND REEL BOX DIMENSIONS

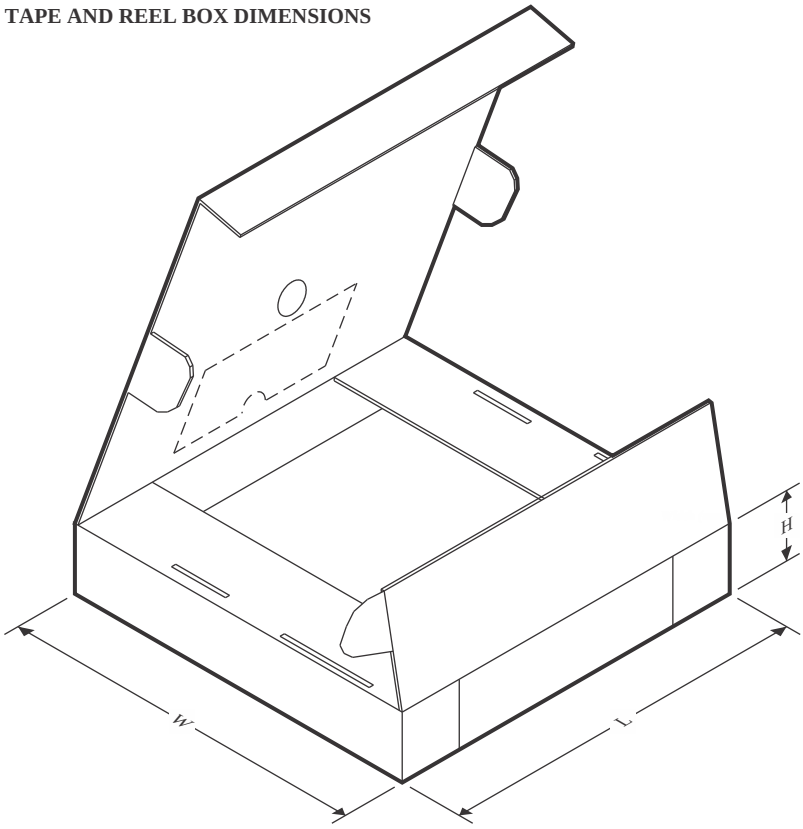

*All dimensions are nominal

Device	Package Type	Package Drawing	Pins	SPQ	Length (mm)	Width (mm)	Height (mm)
SN65LVDS94DGGR	TSSOP	DGG	56	2000	350.0	350.0	43.0
SN65LVDS94DGGR1G4	TSSOP	DGG	56	2000	350.0	350.0	43.0

TUBE

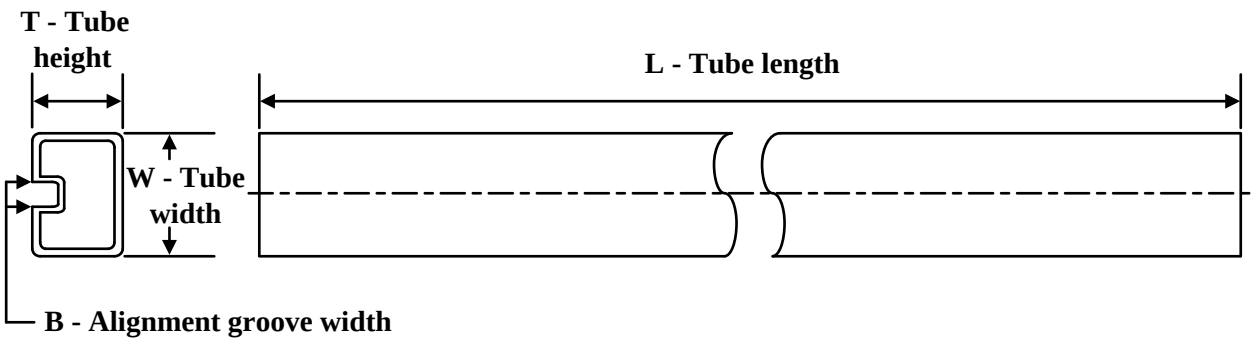

*All dimensions are nominal

Device	Package Name	Package Type	Pins	SPQ	L (mm)	W (mm)	T (µm)	B (mm)
SN65LVDS94DGG	DGG	TSSOP	56	35	530	11.89	3600	4.9
SN65LVDS94DGG.B	DGG	TSSOP	56	35	530	11.89	3600	4.9

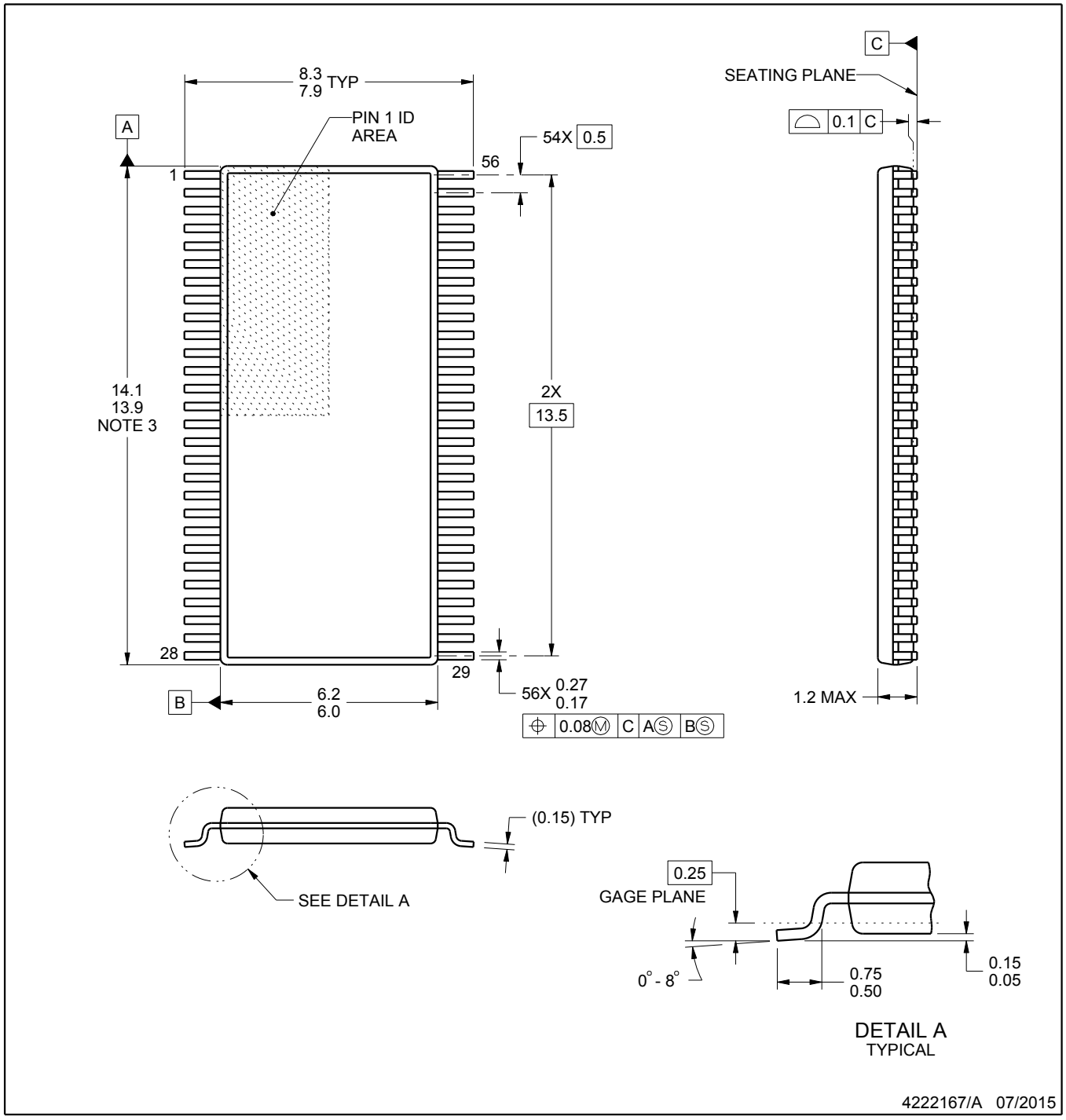

NOTES:

1. All linear dimensions are in millimeters. Any dimensions in parenthesis are for reference only. Dimensioning and tolerancing per ASME Y14.5M.
2. This drawing is subject to change without notice.
3. This dimension does not include mold flash, protrusions, or gate burrs. Mold flash, protrusions, or gate burrs shall not exceed 0.15 mm per side.
4. Reference JEDEC registration MO-153.

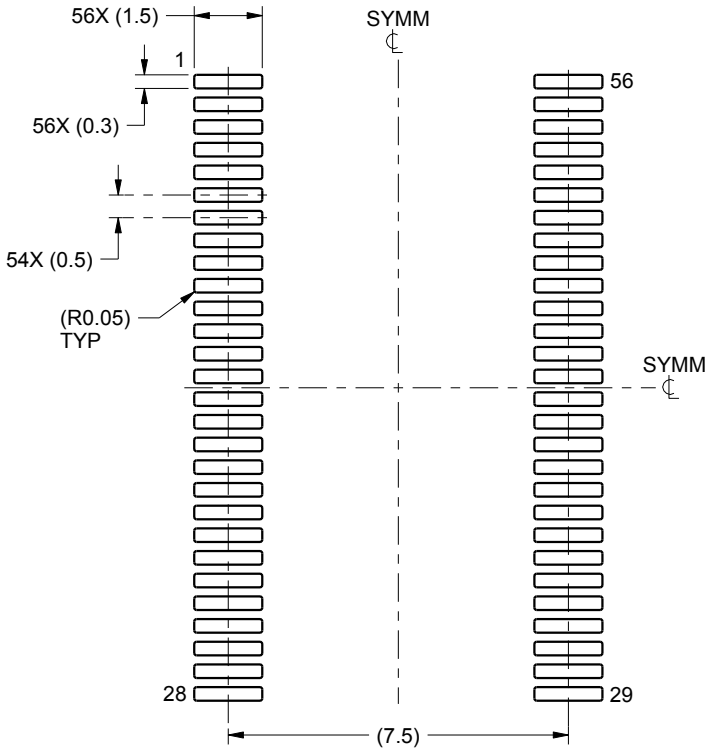

LAND PATTERN EXAMPLE
SCALE:6X

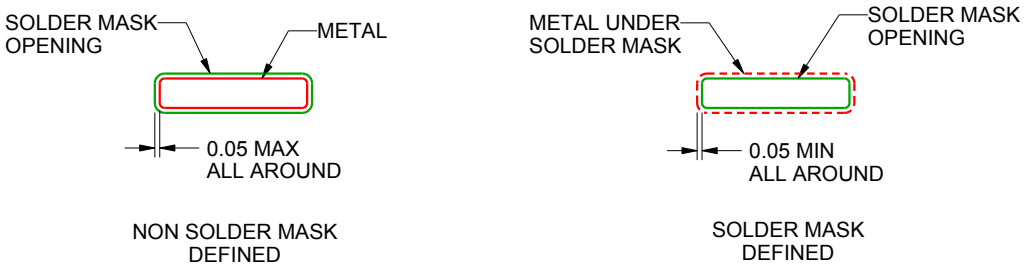

SOLDER MASK DETAILS

4222167/A 07/2015

NOTES: (continued)

5. Publication IPC-7351 may have alternate designs.
6. Solder mask tolerances between and around signal pads can vary based on board fabrication site.

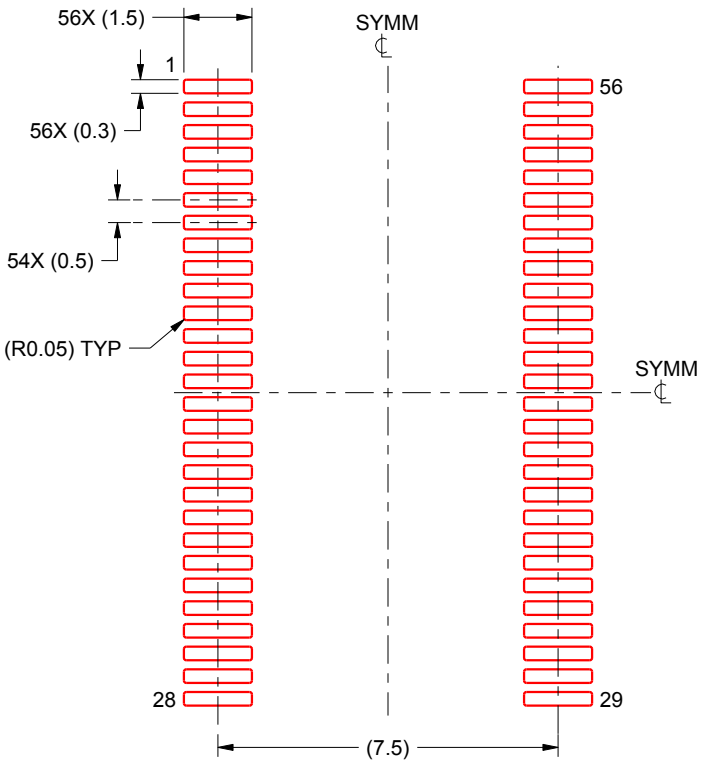

SOLDER PASTE EXAMPLE
BASED ON 0.125 mm THICK STENCIL
SCALE:6X

4222167/A 07/2015

NOTES: (continued)

7. Laser cutting apertures with trapezoidal walls and rounded corners may offer better paste release. IPC-7525 may have alternate design recommendations.
8. Board assembly site may have different recommendations for stencil design.

IMPORTANT NOTICE AND DISCLAIMER

TI PROVIDES TECHNICAL AND RELIABILITY DATA (INCLUDING DATASHEETS), DESIGN RESOURCES (INCLUDING REFERENCE DESIGNS), APPLICATION OR OTHER DESIGN ADVICE, WEB TOOLS, SAFETY INFORMATION, AND OTHER RESOURCES “AS IS” AND WITH ALL FAULTS, AND DISCLAIMS ALL WARRANTIES, EXPRESS AND IMPLIED, INCLUDING WITHOUT LIMITATION ANY IMPLIED WARRANTIES OF MERCHANTABILITY, FITNESS FOR A PARTICULAR PURPOSE OR NON-INFRINGEMENT OF THIRD PARTY INTELLECTUAL PROPERTY RIGHTS.

These resources are intended for skilled developers designing with TI products. You are solely responsible for (1) selecting the appropriate TI products for your application, (2) designing, validating and testing your application, and (3) ensuring your application meets applicable standards, and any other safety, security, regulatory or other requirements.

These resources are subject to change without notice. TI grants you permission to use these resources only for development of an application that uses the TI products described in the resource. Other reproduction and display of these resources is prohibited. No license is granted to any other TI intellectual property right or to any third party intellectual property right. TI disclaims responsibility for, and you fully indemnify TI and its representatives against any claims, damages, costs, losses, and liabilities arising out of your use of these resources.

TI’s products are provided subject to TI’s Terms of Sale, TI’s General Quality Guidelines, or other applicable terms available either on ti.com or provided in conjunction with such TI products. TI’s provision of these resources does not expand or otherwise alter TI’s applicable warranties or warranty disclaimers for TI products. Unless TI explicitly designates a product as custom or customer-specified, TI products are standard, catalog, general purpose devices.

TI objects to and rejects any additional or different terms you may propose.

Copyright © 2025, Texas Instruments Incorporated

Last updated 10/2025