# LM3532 High-Efficiency White LED Driver With Programmable Ambient Light Sensing Capability and I²C-Compatible Interface

## 1 Features

- Drives up to 3 Parallel High-Voltage LED Strings at 40 V Each With up to 90% Efficiency
- 0.4% Typical Current Matching Between Strings
- 256 Level Logarithmic and Linear Brightness Control With 14-Bit Equivalent Dimming
- I²C-Compatible Interface
- Direct Read Back of Ambient Light Sensor Via 8-bit ADC
- Programmable Dual Ambient Light Sensor Inputs With Internal Sensor Gain Selection
- Dual External PWM Inputs for LED Brightness Adjustment
- Independent Current String Brightness Control
- Programmable LED Current Ramp Rates
- 40-V Overvoltage Protection
- 1-A Typical Current Limit

## 2 Applications

- Power Source for White LED Backlit LCD Displays
- Programmable Keypad Backlight

## 3 Description

The LM3532 is a 500-kHz fixed frequency asynchronous boost converter which provides the power for 3 high-voltage, low-side current sinks. The device is programmable over an I²C-compatible interface and has independent current control for all three channels. The adaptive current regulation method allows for different LED currents in each current sink thus allowing for a wide variety of backlight and keypad applications.

The main features of the LM3532 include dual ambient light sensor inputs each with 32 internal voltage setting resistors, 8-bit logarithmic and linear brightness control, dual external PWM brightness control inputs, and up to 1000:1 dimming ratio with programmable fade in and fade out settings.

The LM3532 is available in a 16-pin, 0.4-mm pitch thin DSBGA package. The device operates over a 2.7-V to 5.5-V input voltage range and the −40°C to +85°C temperature range.

**Device Information(1)**

| PART NUMBER | PACKAGE | BODY SIZE (MAX) |
|---|---|---|
| LM3532 | DSBGA (16) | 1.87 mm x 1.77 mm |

(1) For all available packages, see the orderable addendum at the end of the data sheet.

**Typical Application Circuit**

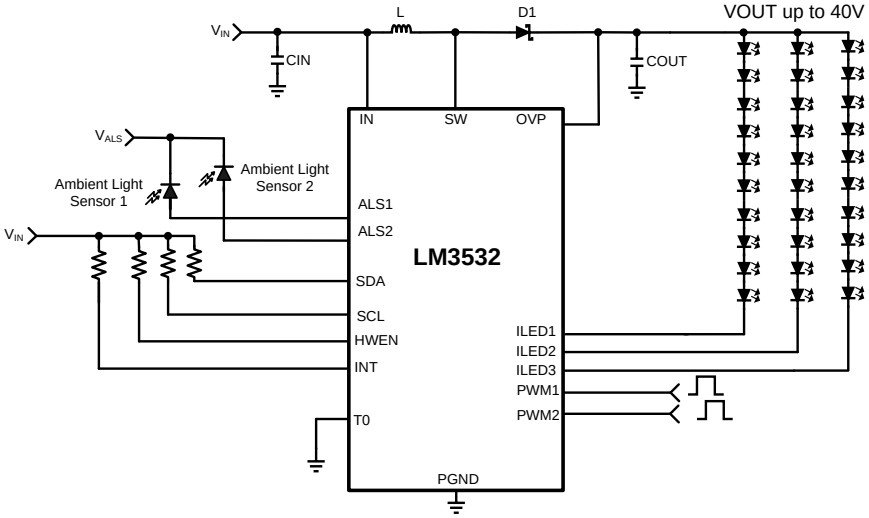


An IMPORTANT NOTICE at the end of this data sheet addresses availability, warranty, changes, use in safety-critical applications, intellectual property matters and other important disclaimers. PRODUCTION DATA.

## Table of Contents

**1 Features** ... 1
**2 Applications** ... 1
**3 Description** ... 1
**4 Revision History** ... 2
**5 Pin Configuration and Functions** ... 3
**6 Specifications** ... 4
6.1 Absolute Maximum Ratings ... 4
6.2 ESD Ratings ... 4
6.3 Recommended Operating Conditions ... 4
6.4 Thermal Information ... 4
6.5 Electrical Characteristics ... 5
6.6 $I^2C$-Compatible Timing Specifications (SCL, SDA) ... 6
6.7 Switching Characteristics ... 6
6.8 Typical Characteristics ... 7
**7 Detailed Description** ... 9
7.1 Overview ... 9
7.2 Functional Block Diagram ... 9
7.3 Feature Description ... 9
7.4 Device Functional Modes ... 12
7.5 Programming ... 23
7.6 Register Maps ... 24
**8 Application and Implementation** ... 34
8.1 Application Information ... 34
8.2 Typical Application ... 34
**9 Power Supply Recommendations** ... 41
**10 Layout** ... 42
10.1 Layout Guidelines ... 42
10.2 Layout Examples ... 45
**11 Device and Documentation Support** ... 47
11.1 Device Support ... 47
11.2 Documentation Support ... 47
11.3 Community Resources ... 47
11.4 Trademarks ... 47
11.5 Electrostatic Discharge Caution ... 47
11.6 Glossary ... 47
**12 Mechanical, Packaging, and Orderable Information** ... 47

## 4 Revision History

NOTE: Page numbers for previous revisions may differ from page numbers in the current version.

| Changes from Revision D (June 2013) to Revision E | Page |
|---|---|
| • Added *Device Information* and *Pin Configuration and Functions* sections, *ESD Ratings* table, *Feature Description*, *Device Functional Modes*, *Application and Implementation*, *Power Supply Recommendations*, *Layout*, *Device and Documentation Support*, and *Mechanical, Packaging, and Orderable Information* sections | 1 |

| Changes from Revision C (March 2013) to Revision D | Page |
|---|---|
| • Updated Output Configuration Register defaults: in col. 2 from "00" to "1X"; in col. 3 from "00" to "01". | 25 |

| Changes from Revision B (July 2012) to Revision C | Page |
|---|---|
| • added "$I_{FULL_SCALE}$ = 20.2mA, Brightness Code = 0xFF" to 2.7V ≤ $V_{IN}$ ≤ 5.5V in conditions for Imatch | 5 |
| • Changed layout of National Data Sheet to TI format | 46 |


Copyright © 2011–2015, Texas Instruments Incorporated

# 5 Pin Configuration and Functions

**YFQ Package**
**16-Pin DSBGA**
**Top View**

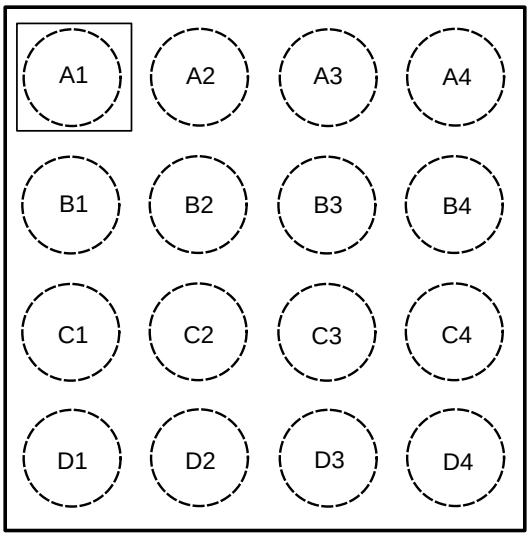


## Pin Functions

| PIN | | TYPE | DESCRIPTION |
|---|---|---|---|
| NO. | NAME | | |
| A1 | OVP | IN | Output voltage sense connection for overvoltage sensing. Connect OVP to the positive terminal of the output capacitor. |
| A2 | ILED3 | IN | Input terminal to high voltage current sink 3 (40 V maximum). The boost converter regulates the minimum of ILED1, ILED2, or ILED3 to 0.4V. |
| A3 | ILED2 | IN | Input terminal to high voltage current sink 2 (40 V maximum). The boost converter regulates the minimum of ILED1, ILED2, or ILED3 to 0.4V. |
| A4 | ILED1 | IN | Input terminal to high voltage current sink 1 (40 V maximum). The boost converter regulates the minimum of ILED1, ILED2, or ILED3 to 0.4V. |
| B1 | ALS1 | IN | Ambient light sensor input 1. |
| B2 | ALS2 | IN | Ambient light sensor input 2. |
| B3 | HWEN | IN | Active high hardware enable. Pull this pin high to enable the LM3532. HWEN is a high impedance input. |
| B4 | IN | IN | Input voltage connection. Bypass IN to GND with a minimum 2.2-µF ceramic capacitor. |
| C1 | PWM2 | IN | External PWM brightness control Input 2. |
| C2 | PWM1 | IN | External PWM brightness Ccontrol Input 1. |
| C3 | INT | OUT | Programmable Interrupt pin. INT is an open-drain output that pulls low when the ALS changes zones. |
| C4 | GND | GND | Ground |
| D1 | SDA | I/O | Serial data connection for $I^2C$-compatible interface |
| D2 | SCL | IN | Serial clock connection for $I^2C$-compatible interface |
| D3 | TO | IN | Unused test input. This pin must be tied externally to GND for proper operation. |
| D4 | SW | IN | Drain connection for boost converters internal NFET |

Copyright © 2011–2015, Texas Instruments Incorporated

# 6 Specifications

## 6.1 Absolute Maximum Ratings

over operating free-air temperature range (unless otherwise noted)[1][2][3]

| | MIN | MAX | UNIT |
|---|---|---|---|
| $V_{IN}$ to GND | | | V |
| $V_{SW}$, $V_{OVP}$, $V_{ILED1}$, $V_{ILED2}$, $V_{ILED3}$ to GND | | | V |
| $V_{SCL}$, $V_{SDA}$, $V_{ALS1}$, $V_{ALS2}$, $V_{PWM1}$, $V_{PWM2}$, $V_{INT}$, $V_{HWEN}$, $V_{T0}$ to GND | | | V |
| Continuous power dissipation | Internally Limited | | |
| Junction temperature , $T_{J-MAX}$ | | 150 | °C |
| Maximum lead temperature (soldering, 10s)[4] | | 300 | °C |
| Storage temperature, $T_{stg}$ | −65 | 150 | °C |

(1) Stresses beyond those listed under *Absolute Maximum Ratings* may cause permanent damage to the device. These are stress ratings only, which do not imply functional operation of the device at these or any other conditions beyond those indicated under *Recommended Operating Conditions*. Exposure to absolute-maximum-rated conditions for extended periods may affect device reliability.
(2) If Military/Aerospace specified devices are required, contact the Texas Instruments Sales Office/ Distributors for availability and specifications
(3) All voltages are with respect to the potential at the GND pin.
(4) For detailed soldering specifications and information, refer to Application Note AN-1112: *DSBGA Wafer Level Chip Scale Package* (SNVA009).

## 6.2 ESD Ratings

| | | | VALUE | UNIT |
|---|---|---|---|---|
| $V_{(ESD)}$ | Electrostatic discharge | Human-body model (HBM), per ANSI/ESDA/JEDEC JS-001[1] | ±2000 | V |
| | | Charged-device model (CDM), per JEDEC specification JESD22-C101[2] | ±5000 | |

(1) JEDEC document JEP155 states that 500-V HBM allows safe manufacturing with a standard ESD control process.
(2) JEDEC document JEP157 states that 250-V CDM allows safe manufacturing with a standard ESD control process.

## 6.3 Recommended Operating Conditions

over operating free-air temperature range (unless otherwise noted)[1][2]

| | MIN | NOM | MAX | UNIT |
|---|---|---|---|---|
| $V_{IN}$ to GND | 2.7 | | 5.5 | V |
| $V_{SW}$, $V_{OVP}$, $V_{ILED1}$, $V_{ILED2}$, $V_{ILED3}$ to GND | 0 | | 40 | V |
| Junction temperature, $T_J$[3][4] | –40 | | 125 | °C |

(1) Stresses beyond those listed under *Absolute Maximum Ratings* may cause permanent damage to the device. These are stress ratings only, which do not imply functional operation of the device at these or any other conditions beyond those indicated under *Recommended Operating Conditions*. Exposure to absolute-maximum-rated conditions for extended periods may affect device reliability.
(2) All voltages are with respect to the potential at the GND pin.
(3) Internal thermal shutdown circuitry protects the device from permanent damage. Thermal shutdown engages at $T_J$= 140°C (typical) and disengages at $T_J$= 125°C (typical).
(4) In applications where high power dissipation and/or poor package thermal resistance is present, the maximum ambient temperature may have to be derated. Maximum ambient temperature ($T_{A-MAX}$) is dependent on the maximum operating junction temperature ($T_{J-MAX-OP}$ = 125°C), the maximum power dissipation of the device in the application ($P_{D-MAX}$), and the junction-to-ambient thermal resistance of the part/package in the application ($R_{\theta JA}$), as given by the following equation: $T_{A-MAX} = T_{J-MAX-OP} – (R_{\theta JA} \times P_{D-MAX})$.

## 6.4 Thermal Information

| THERMAL METRIC[1] | | LM3532 YFQ (DSBGA) 16 PINS | UNIT |
|---|---|---|---|
| $R_{\theta JA}$ | Junction-to-ambient thermal resistance | 61.3 | °C/W |

(1) For more information about traditional and new thermal metrics, see the *Semiconductor and IC Package Thermal Metrics* application report, SPRA953.


Copyright © 2011–2015, Texas Instruments Incorporated

## 6.5 Electrical Characteristics

Minimum and maximum limits apply over the full operating ambient temperature range (−40°C ≤ $T_A$ ≤ +85°C), typical limits are for $T_A$ = 25°C, and $V_{IN}$ = 3.6 V, unless otherwise specified.[1][2]

| PARAMETER | | TEST CONDITIONS | MIN | TYP | MAX | UNIT |
|---|---|---|---|---|---|---|
| $I_{LED(1/2/3)}$ | Output current regulation accuracy (ILED1, ILED2 or ILED3) | 2.7 V ≤ $V_{IN}$ ≤ 5.5 V, ControlX full-scale current register = 0xF3, brightness code = 0xFF | | 20.2 | | mA |
| | | 2.7 V ≤ $V_{IN}$ ≤ 5.5 V, ControlX full-scale current register = 0xF3, brightness code = 0xFF | 18.68 | | 21.8 | mA |
| $I_{MATCH}$[3][4] | ILED2 to ILED3 current matching | 2.7 V ≤ $V_{IN}$ ≤ 5.5 V, $I_{FULL_SCALE}$ = 20.2 mA Brightness code = 0xFF | | 0.3% | | |
| | | 2.7 V ≤ $V_{IN}$ ≤ 5.5 V, $I_{FULL_SCALE}$ = 20.2 mA Brightness code = 0xFF | –2% | | 2% | |
| $V_{REG_CS}$ | Regulated current sink headroom voltage | | | 400 | | mV |
| $V_{HR}$ | Current sink minimum headroom voltage | $I_{LED}$ = 95% of nominal and 20.2 mA | | 200 | | mV |
| | | $I_{LED}$ = 95% of nominal and 20.2 mA | | | 240 | |
| $R_{DSON}$ | NMOS switch on resistance | $I_{SW}$ = 100 mA | | 0.25 | | Ω |
| $I_{CL}$ | NMOS switch current limit | 2.7 V ≤ $V_{IN}$ ≤ 5.5 V | | 1000 | | mA |
| | | 2.7 V ≤ $V_{IN}$ ≤ 5.5 V | 880 | 1000 | 1120 | mA |
| $V_{OVP}$ | Output overvoltage protection | ON threshold, 2.7 V ≤ $V_{IN}$ ≤ 5.5 V | | 41 | | V |
| | | ON threshold, 2.7 V ≤ $V_{IN}$ ≤ 5.5 V | 40 | | 42 | |
| | | Hysteresis | | 1 | | |
| $D_{MAX}$ | Maximum duty cycle | | | 94% | | |
| $D_{MIN}$ | Minimum duty cycle | | | 10% | | |
| $I_Q$ | Quiescent current into IN, device not switching | ILED1 = ILED2 = ILED3 = 20.2 mA, feedback disabled | | 490 | | µA |
| $I_{Q_SW}$ | Switching supply current | $I_{LED1}$ = $I_{LED2}$ = $I_{LED3}$ = 20.2 mA, $V_{OUT}$ = 32 V | | 1.35 | | mA |
| $I_{SHDN}$ | Shutdown current | 2.7 V ≤ $V_{IN}$ ≤ 5.5 V, HWEN = GND | | 1 | | µA |
| | | 2.7 V ≤ $V_{IN}$ ≤ 5.5 V, HWEN = GND −40°C ≤ $T_A$ ≤ +85°C | | | 2 | |
| $I_{LED_MIN}$ | Minimum LED Current in ILED1, ILED2 or ILED3 | Full-scale current =20.2 mA Brightness code = 0x01, Mapping = Exponential | | 9.5 | | µA |
| $T_{SD}$ | Thermal Shutdown | | | 140 | | °C |
| | Hysteresis | | | 15 | | |

(1) All voltages are with respect to the potential at the GND pin.
(2) Minimum and Maximum limits are verified by design, test, or statistical analysis. Typical numbers are not verified, but do represent the most likely norm.
(3) All current sinks for the matching spec are assigned to the same control bank.
(4) LED current sink matching between ILED2 and ILED3 is given by taking the difference between either (ILED2 or ILED3) and the average current between the two, and dividing by the average current between the two (ILED2/3 – ILED(AVE))/ILED(AVE). This simplifies to (ILED2 – ILED3)/(ILED2 + ILED3). In this test, both ILED2 and ILED3 are assigned to Bank A.

Copyright © 2011–2015, Texas Instruments Incorporated

## Electrical Characteristics (continued)

Minimum and maximum limits apply over the full operating ambient temperature range (−40°C ≤ $T_A$ ≤ +85°C), typical limits are for $T_A$ = 25°C, and $V_{IN}$ = 3.6 V, unless otherwise specified.(1)(2)

| PARAMETER | | TEST CONDITIONS | MIN | TYP | MAX | UNIT |
|---|---|---|---|---|---|---|
| **LOGIC INPUTS/OUTPUTS (PWM1, PWM2, HWEN, SCL, SDA, INT)** | | | | | | |
| $V_{IL}$ | Input logic low | 2.7 V ≤ $V_{IN}$ ≤ 5.5 V | 0 | | 0.4 | V |
| $V_{IH}$ | Input logic high | 2.7 V ≤ $V_{IN}$ ≤ 5.5 V | 1.2 | | $V_{IN}$ | V |
| $V_{OL}$ | Output logic low (SCL, INT) | 2.7 V ≤ $V_{IN}$ ≤ 5.5 V, $I_{LOAD}$ = 3 mA | | | 0.4 | V |
| $R_{PWM}$ | PWM input internal pulldown resistance (PWM1, PWM2) | | | 100 | | kΩ |
| **AMBIENT LIGHT SENSOR INPUTS (ALS1, ALS2)** | | | | | | |
| $R_{ALS1}$, $R_{ALS2}$ | ALS pin internal pulldown resistors | ALS1, ALS2 Resistor Select Register = 0x0F, 2.7 V ≤ $V_{IN}$ ≤ 5.5 V | | 2.44 | | kΩ |
| | | ALS1, ALS2 Resistor Select Register = 0x0F, 2.7 V ≤ $V_{IN}$ ≤ 5.5 V | 2.29 | | 2.59 | kΩ |
| $V_{ALS_REF}$ | Ambient light sensor reference voltage | 2.7 V ≤ $V_{IN}$ ≤ 5.5 V | | 2 | | V |
| | | 2.7 V ≤ $V_{IN}$ ≤ 5.5 V | 1.94 | | 2.06 | V |
| $V_{OS}$ | ALS input offset voltage (Code 0-to-1 transition – $V_{LSB}$) | 2.7 V ≤ $V_{IN}$ ≤ 5.5 V | | 2.5 | | mV |
| | | 2.7 V ≤ $V_{IN}$ ≤ 5.5 V | 0.8 | | 4.2 | mV |
| $t_{CONV}$ | Conversion time | | | | 154 | µs |
| LSB | ADC resolution | 2.7V ≤ $V_{IN}$ ≤ 5.5V | | 7.84 | | mV |

## 6.6 I²C-Compatible Timing Specifications (SCL, SDA)

See(1)

| | | MIN | NOM | MAX | UNIT |
|---|---|---|---|---|---|
| $t_1$ | SCL (clock period) | 2.5 | | | µs |
| $t_2$ | Data In setup time to SCL high | 100 | | | ns |
| $t_3$ | Data out stable after SCL low | 0 | | | ns |
| $t_4$ | SDA low setup time to SCL low (start) | 100 | | | ns |
| $t_5$ | SDA high hold time after SCL high (stop) | 100 | | | ns |

(1) SCL and SDA must be glitch-free in order for proper brightness control to be realized.

## 6.7 Switching Characteristics

over operating free-air temperature range (unless otherwise noted)

| PARAMETER | | TEST CONDITIONS | MIN | TYP | MAX | UNIT |
|---|---|---|---|---|---|---|
| $f_{SW}$ | Switching frequency | 2.7 V ≤ $V_{IN}$ ≤ 5.5 V | | 500 | | kHz |
| | | 2.7 V ≤ $V_{IN}$ ≤ 5.5 V −40°C ≤ $T_A$ ≤ 85°C | 450 | | 550 | kHz |


Copyright © 2011–2015, Texas Instruments Incorporated

## 6.8 Typical Characteristics

$V_{IN}$ = 3.6 V, LEDs ($V_F$ = 3.2 V at 20 mA, $T_A$ = 25°C), $C_{OUT}$ = 1 µF, $C_{IN}$ = 2.2 µF, $T_A$ = 25°C unless otherwise specified.

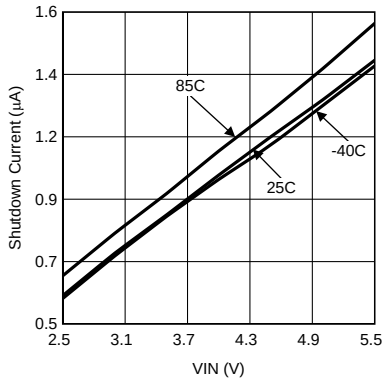


HWEN = GND

**Figure 1. Shutdown Current vs $V_{IN}$**

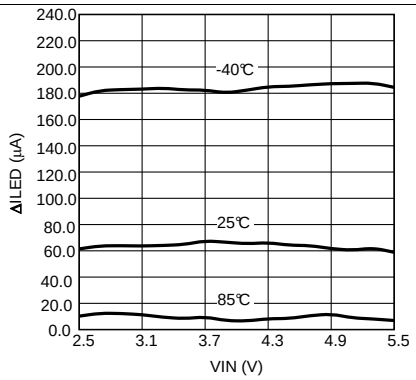


**Figure 2. Current Sink Matching vs $V_{IN}$ ILED2 To ILED3**

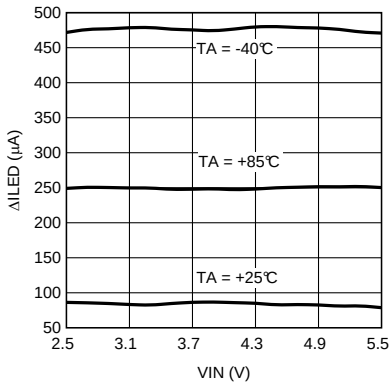


(ΔILED is worst case difference between all three strings)

**Figure 3. Current Sink Matching vs $V_{IN}$ ILED1 to ILED2 To ILED3**

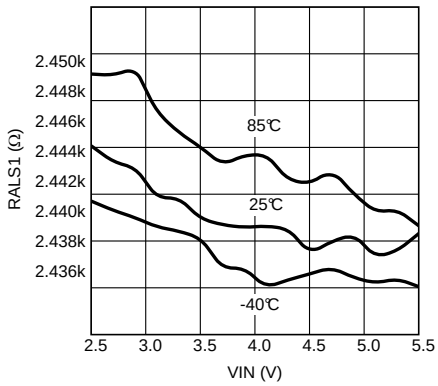


2.44-kΩ Setting

**Figure 4. ALS Resistance vs $V_{IN}$ $R_{ALS1}$**

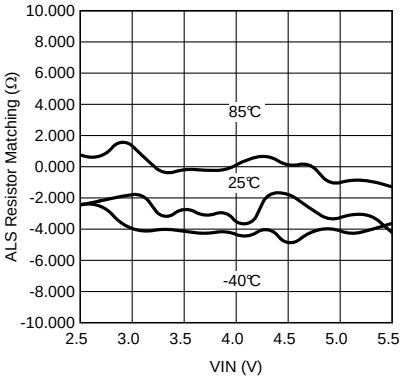


2.44-kΩ Setting

**Figure 5. Als Resistor Matching vs $V_{IN}$**

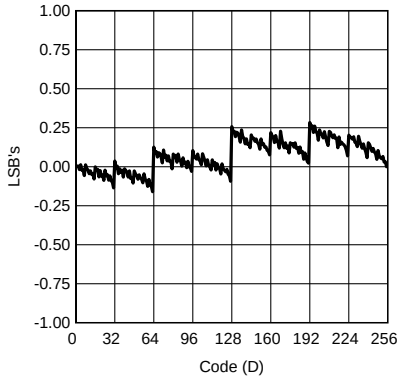


**Figure 6. Integral Non Linearity vs Code (Endpoint Method)**

## Typical Characteristics (continued)

$V_{IN}$ = 3.6 V, LEDs ($V_F$ = 3.2 V at 20 mA, $T_A$ = 25°C), $C_{OUT}$ = 1 µF, $C_{IN}$ = 2.2 µF, $T_A$ = 25°C unless otherwise specified.

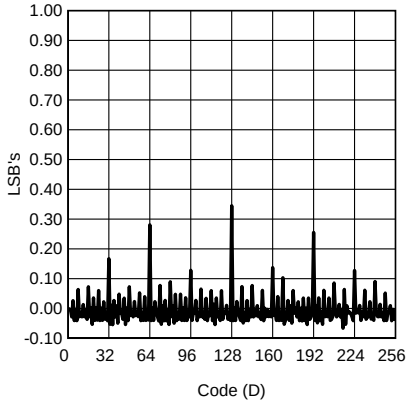


**Figure 7. Differential Non Linearity vs Code**

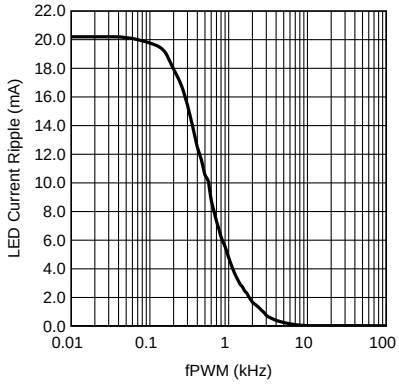


**Figure 8. Peak-to-Peak LED Current Ripple vs $F_{PWM}$**

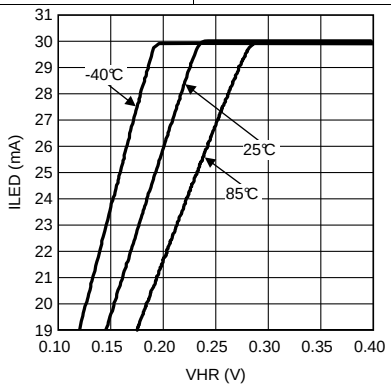


**Figure 9. LED Current vs Headroom Voltage**


Copyright © 2011–2015, Texas Instruments Incorporated

# 7 Detailed Description

## 7.1 Overview

The LM3532 backlight driver consists of three 30-mA current sinks, a dual input ambient light sensor interface, and a dual input PWM control. The LED current can be controlled via either the $I^2C$ bus, the PWM input, the ambient light sensor interface, or a combination of each. The programmable options via $I^2C$ allow for the three current sinks to be controlled independently or be controlled by a single source.

## 7.2 Functional Block Diagram

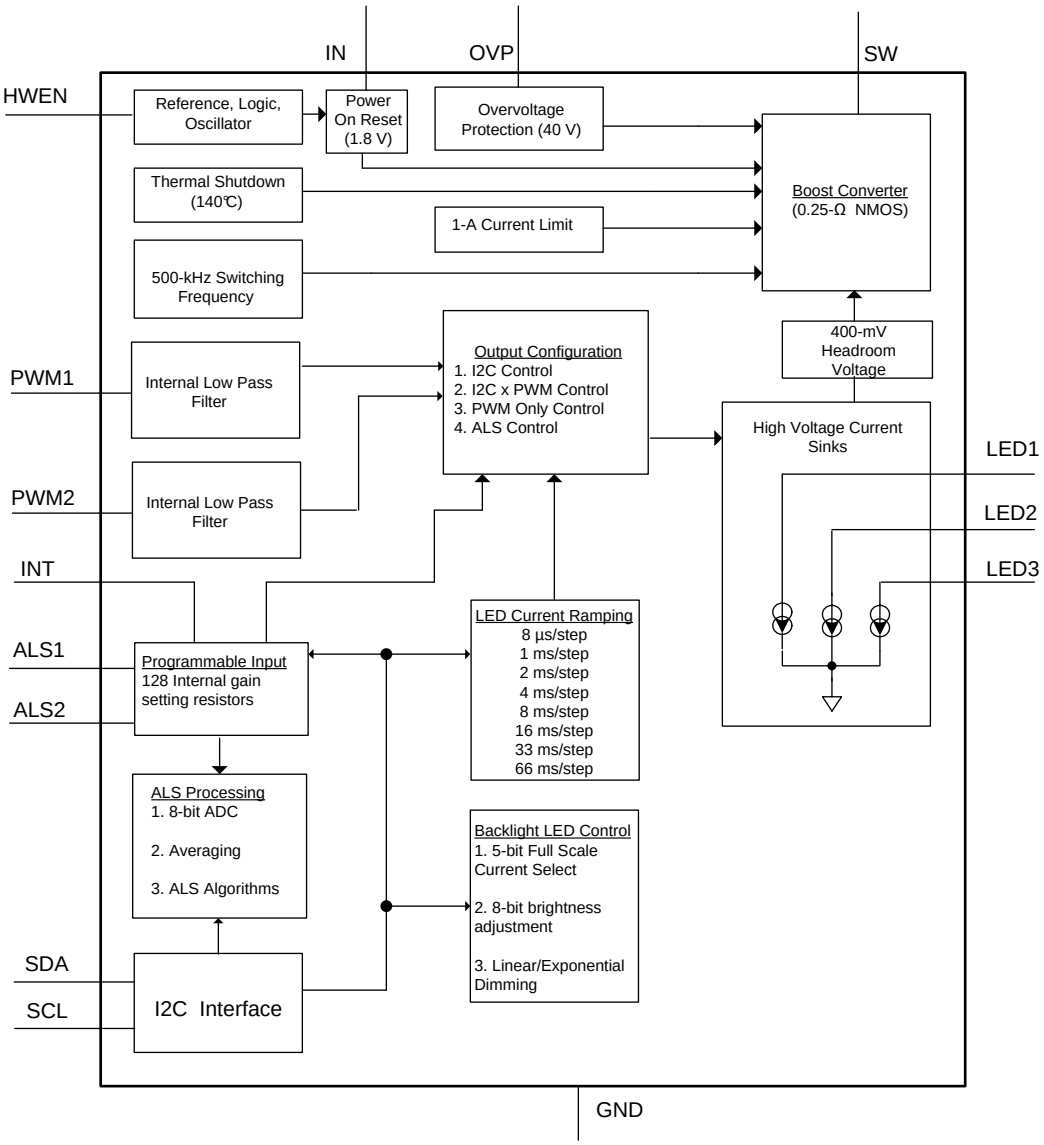


## 7.3 Feature Description

### 7.3.1 40-V Boost Converter

The LM3532 contains a 40-V maximum output voltage, asynchronous boost converter with an integrated 250-mΩ switch, and three low-side current sinks. Each low-side current sink is independently programmable from 0 to 30 mA.

## Feature Description (continued)

### 7.3.2 Hardware Enable Input

HWEN is the LM3532 device's global hardware enable input. This pin must be driven high to enable the device. HWEN is a high-impedance input so cannot be left floating. Typically HWEN would be connected through a pullup resistor to the logic supply voltage or driven high from a microcontroller. Driving HWEN low places the LM3532 into a low-current shutdown state and force all the internal registers to their power-on reset (POR) states.

### 7.3.3 Feedback Enable

Each current sink can be set for feedback enable or feedback disable. When feedback is enabled, the boost converter maintains at least 400 mV across each active current sink. This causes the boost output voltage ($V_{OUT}$) to raise up or down depending on how many LEDs are placed in series in the highest voltage string. This ensures there is a minimum headroom voltage across each current sink. The potential drawback is that for large differentials in LED counts between strings, the LED voltage can be drastically different causing the excess voltage in the lower LED string to be dropped across its current sink. In situations where there are other voltage sources available, or where the LED count is low enough to use $V_{IN}$ as the power source, the feedback can be disabled on the specific current sink. This allows for the current sink to be active, but eliminates its control over the boost output voltage (see Figure 10). In this situation care must be taken to ensure there is always at least 400 mV of headroom voltage across each active current sink to avoid the current from going out of regulation. Control over the feedback enable/disable is programmable via the Feedback Enable Register (see Table 13).

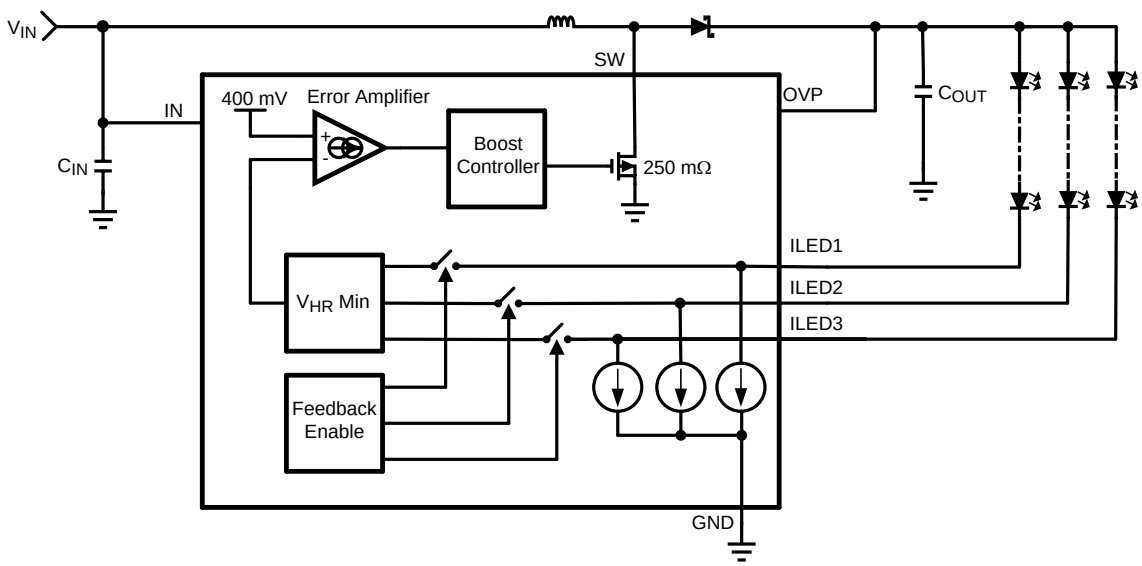


**Figure 10. LM3532 Feedback Enable/Disable**

### 7.3.4 LM3532 Current Sink Configuration

Control of the LM3532 device's three current sinks is done by configuring the three internal control banks (Control A, Control B, and Control C) (see Figure 11). Any of the current sinks (ILED1, ILED2, or ILED3) can be mapped to any of the three control banks. Configuration of the control banks is done via the Output Configuration register.


Copyright © 2011–2015, Texas Instruments Incorporated

## Feature Description (continued)

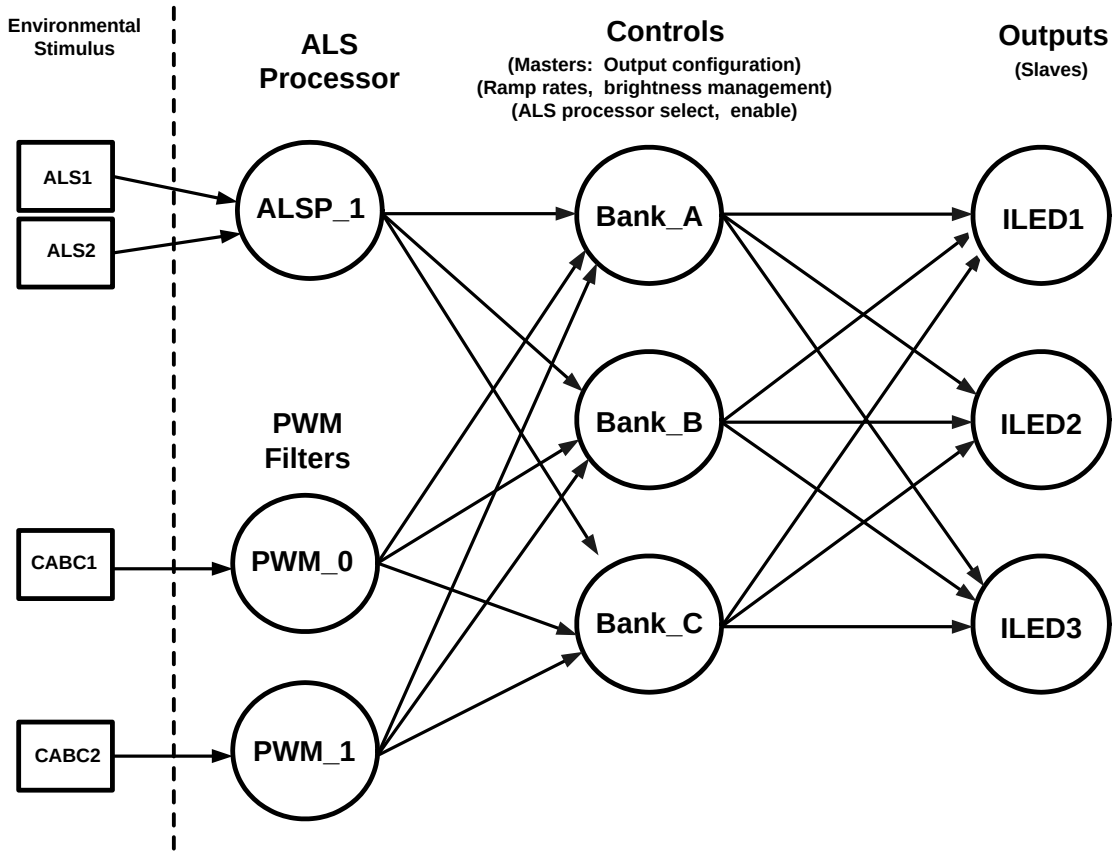


**Figure 11. LM3532 Functional Control Diagram**

### 7.3.5 PWM Inputs

The LM3532 provides two PWM inputs (PWM1 and PWM2) which can be mapped to any of the three Control Banks. PWM input mapping is done through the Control A PWM Configuration register, the Control B PWM Configuration register, and the Control C PWM Configuration register.

Both PWM inputs (PWM1 and PWM2) feed into internal level shifters and lowpass filters. This allows the PWM inputs to accept logic level signals and convert them to analog control signals which can control the assigned Control Banks LED current. The internal lowpass filter at each PWM input has a typical corner frequency of 540 Hz with a Q of 0.5. This gives a low end useful PWM frequency of around 2 kHz. Frequencies lower than this cause the LED current to show larger ripple and result in non-linear behavior vs. duty cycle due to the response time of the boost circuit. The upper boundary of the PWM frequency is greater than 100 kHz. Frequencies above 200 kHz begin to show non linear behavior due to propagation delays through the PWM input circuitry.

### 7.3.6 Full-Scale LED Current

There are 32 programmable full-scale current settings for each of the three control banks (Control A, Control B, and Control C). Each control bank has its own independent full-scale current setting ($I_{LED_FULL_SCALE}$). Full-scale current for the respective Control Bank is set via the Control A Full-Scale Current Register, the Control B Full-Scale Current Register, and the Control C Full-Scale Current Register (see Table 12).

## Feature Description (continued)

### 7.3.7 Interrupt Output

INT is an open drain output that pulls low when the ALS is enabled and when one of the ALS inputs transitions into a new zone. At the same time, the ALS Zone Information register is updated with the current ALS zone, and the software flag (bit 3 of the ALS Zone Information register) is written high. A readback of the Zone Information Register clears the software interrupt flag and reset the INT output to the open drain state. The active pulldown at INT is typically 125 Ω.

### 7.3.8 Protection Features

#### *7.3.8.1 Overvoltage Protection*

The LM3532 devices's boost converter provides open-load protection, by monitoring the OVP pin. The OVP pin is designed to connect as close as possible to the positive terminal of the output capacitor. In the event of a disconnected load (LED current string with feedback enabled), the output voltage rises in order to try and maintain the correct headroom across the feedback enabled current sinks (see Table 13). Once $V_{OUT}$ climbs to the OVP threshold ($V_{OVP}$) the boost converter is turned off, and switching stops until $V_{OUT}$ falls below the OVP hysteresis ($V_{OVP}$ – 1 V). Once the OVP hysteresis is crossed the LM3532 device's boost converter begins switching again. In open load conditions this would result in a pulsed on/off operation.

#### *7.3.8.2 Current Limit*

The LM3532 device's peak current limit in the NFET is set at typically 1 A (880 mA, minimum). During the positive portion of the switching cycle, if the NFET's current rises up to the current limit threshold, the NFET turns off for the rest of the switching cycle. At the start of the next switching cycle the NFET turns on again. For loads that cause the LM3532 to hit current limit each switching cycle, the output power can become clamped because the headroom across the feedback enabled current sinks is no longer being regulated when the device is in current limit. See *Maximum Output Power* below for guidelines on how peak current affects the LM3532 device's maximum output power.

## 7.4 Device Functional Modes

### 7.4.1 LED Current Ramping

The LM3532 provides 4 methods to control the rate of rise or fall of the LED current during these events:

1. Start-up from 0 to the initial target
2. Shutdown
3. Ramp up from one brightness level to the next
4. Ramp down from one brightness level to the next

See Table 4 and Table 5.

### 7.4.2 Start-up and Shutdown Current Ramping

The start-up and shutdown ramp rates are independently programmable in the Start-up/Shutdown Ramp Rate register (see Table 4). There are 8 different start-up and 8 different shutdown ramp rates. The start-up ramp rates are independently programmable from the shutdown ramp rates, but not independently programmable for each Control Bank. For example, programming a start-up or shutdown ramp rate, programs the same ramp rate for each Control Bank.

### 7.4.3 Run-Time Ramp Rates

Current ramping from one brightness level to the next is programmed via the Run-Time Ramp Rate Register (see Table 5). There are 8 different ramp-up and 8 different ramp-down rates. The ramp-up rate is independently programmable from the ramp-down rate, but not independently programmable for each Control Bank. For example, programming a ramp-up or a ramp-down rate programs the same rate for each Control Bank.


Copyright © 2011–2015, Texas Instruments Incorporated

## Device Functional Modes (continued)

### 7.4.4 LED Current Mapping Modes

All LED current brightness codes are 8 bits (256 different levels), where each bit represents a percentage of the programmed full-scale current setting for that particular Control Bank. The percentage of the full-scale current is different depending on which mapping mode is selected. The mapping mode can be either exponential or linear. Mapping mode is selected via bit [1] of the Control A, B, or C Brightness Configuration Registers.

### 7.4.5 Exponential Current Mapping Mode

In exponential mapping mode, the backlight code to LED current approximates the following equation:

$$I_{LED} = I_{LED_FULLSCALE} \times 0.85^{\left[40 - \left(\frac{Code^{+1}}{6.4}\right)\right]} \times D_{PWM}$$

where

- Code is the 8-bit code in the programmed brightness register
- $D_{PWM}$ is the duty cycle of the PWM input that is assigned to the particular control bank (1)

Figure 12 shows the typical response of percentage of full-scale current setting vs 8-bit brightness code.

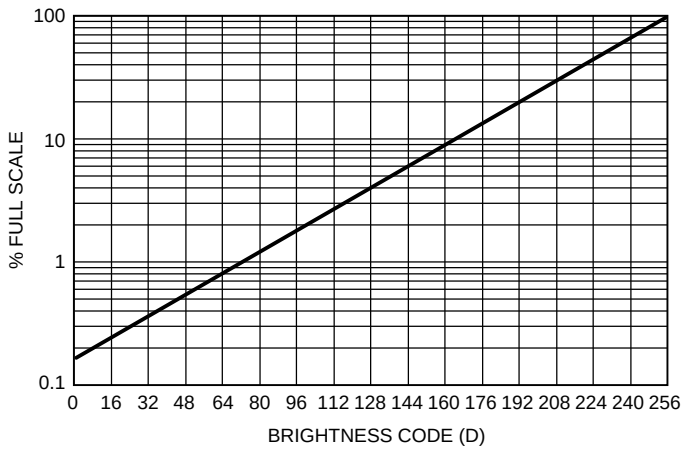


**Figure 12. Exponential Mapping Response**

### 7.4.6 Linear Current Mapping

In linear mapping mode the backlight code to LED current approximates Equation 2:

$$I_{LED} = I_{LED_FULLSCALE} \times \frac{1}{255} \times Code \times D_{PWM}$$

where

- Code is the 8-bit code in the programmed brightness register
- DPWM is the duty cycle of the PWM input that is assigned to the particular control bank. (2)

For the linear mapped mode (Figure 13) shows the typical response of percentage of full-scale current setting vs 8-bit brightness code.

## Device Functional Modes (continued)

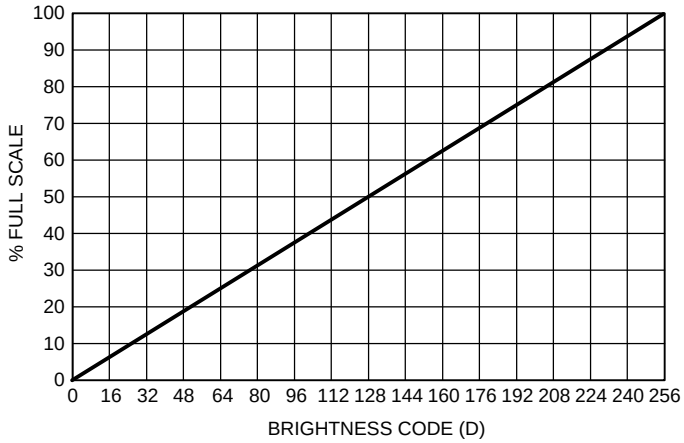


**Figure 13. Linear Mapping Response**

### 7.4.7 LED Current Control

Once the full-scale current is set, control of the LM3532 device's LED current can be done via 2 methods:

1. $I^2C$ Current Control
2. Ambient Light Sensor Current Control

$I^2C$ current control allows for the direct control of the LED current by writing directly to the specific brightness register. In ambient light sensor current control the LED current is automatically set by the ambient light sensor interface.

#### *7.4.7.1 $I^2C$ Current Control*

$I^2C$ current control is accomplished by using one of the Zone Target Registers (for the respective Control Bank) as the brightness register. This is done via bits[4:2] of the Control (A, B, or C) Brightness Registers (see Table 9, Table 10, and Table 11). For example, programming bits[4:2] of the Control A Brightness Register with (000) makes the brightness register for Bank A (in $I^2C$ Current Control) the Control A Zone Target 0 Register.

#### *7.4.7.2 $I^2C$ Current Control With PWM*

$I^2C$ current control can also incorporate the PWM duty cycle at one of the PWM inputs (PWM1 or PWM2). In this situation the LED current is then a function of both the code in the programmed brightness register and the duty cycle input into the assigned PWM inputs (PWM1 or PWM2).

### 7.4.8 Assigning and Enabling a PWM Input

To make the backlight current a function of the PWM input duty cycle, one of the PWM inputs must first be assigned to a particular Control Bank. This is done via bit [0] of the Control A, B, or C PWM Registers (see Table 6, Table 7, or Table 8). After assigning a PWM input to a Control Bank, the PWM input is then enabled via bits [6:2] of the Control A/B/C PWM Enable Registers. Each enable bit is associated with a specific Zone Target Register in $I^2C$ Current Control. For example, if Control A Zone Target 0 Register is configured as the brightness register, then to enable PWM for that brightness register, Control A PWM bit [2] would be set to 1.

### 7.4.9 Enabling a Current Sink

Once the brightness register and PWM inputs are configured in $I^2C$ Current Control, the current sinks assigned to the specific control bank are enabled via the Control Enable Register (see Table 14). Table 1 below shows the possible configurations for Control Bank A in $I^2C$ Current Control. Table 1 would also apply to Control Bank B and Control Bank C.


Copyright © 2011–2015, Texas Instruments Incorporated

## Device Functional Modes (continued)

**Table 1. I²C Current Control and PWM Bit Settings (For Control Bank A)**

| CURRENT SINK ASSIGNMENT | BRIGHTNESS REGISTER | PWM SELECT | PWM ENABLE | CURRENT SINK ENABLE |
|---|---|---|---|---|
| **Output Configuration Register**<br>Bits[1:0] = 00, assigns ILED1 to Control Bank A<br>Bits[3:2] = 00 assigns ILED2 to Control Bank A<br>Bits[5:4] = 00, assigns ILED3 to Control Bank A | **Control A Brightness Configuration Register Bits [4:2]**<br>000 selects Control A Zone Target 0 as brightness register<br>001 selects Control A Zone Target 1 brightness register<br>010 selects Control A Zone Target 2 brightness register<br>011 selects Control A Zone Target 3 brightness register<br>1XX selects Control A Zone Target 4 brightness register | **Control A PWM Register Bit[0]**<br>0 selects PWM1<br>1 selects PWM2 | **Control A PWM Register**<br>Bit[2] is PWM enable when Control A Zone Target 0 is configured as the brightness register<br>Bit[3] is PWM enable when Control A Zone Target 1 is configured as the brightness register<br>Bit[4] is PWM enable when Control A Zone Target 2 is configured as the brightness register<br>Bit[5] is PWM enable when Control A Zone Target 3 is configured as the brightness register<br>Bit[6] is PWM enable when Control A Zone Target 4 is configured as the brightness register | **Control Enable Register Bit [0]**<br>0 = Bank A Disabled<br>1 = Bank A Enabled |

### 7.4.10 Ambient Light Sensor Current Control

In Ambient Light Sensor (ALS) current control the LM3532 device's backlight current is automatically set based upon the voltage at the ambient light sensor inputs (ALS1 and/or ALS2). These inputs are designed to connect to the outputs of analog ambient light sensors. Each ALS input has an active input voltage range of 0 to 2 V.

#### *7.4.10.1 ALS Resistors*

The LM3532 offers 32 separate programmable internal resistors at the ALS1 and ALS2 inputs. These resistors take the ambient light sensor's output current and convert it into a voltage. The value of the resistor selected is typically chosen such that the ambient light sensors output voltage swing goes from 0 to 2 V across the intended measured ambient light (LUX) range. The ALS resistor values are programmed via the ALS1 and ALS2 Resistor select registers (see Table 15). The code-to-resistor selection (assuming a 2-V full-scale voltage range) is shown in Equation 3:

$$R_{ALS_} = \frac{2V}{54\ \mu A} \times \text{Code} \tag{3}$$

Each higher code in the specific ALS Resistor Select Register increases the allowed ALS sensor current by 54 µA ( for a 2-V full-scale). When the ALS is disabled (ALS Configuration Register bit [3] = 0) the ALS inputs are set to a high impedance mode no matter what the ALS resistor selection is. Alternatively, ALS Resistor Select Register Code 00000 sets the specific ALS input to high impedance.

#### *7.4.10.2 Ambient Light Zone Boundaries*

The LM3532 provides 5 ambient light brightness zones which are defined by 4 zone boundary registers. The LM3532 has one set of zone boundary registers that is shared globally by all control banks. As the voltage at the ALS input changes in response to the ambient light sensors received light, the ALS voltage transitions through the 5 defined brightness zones. Each brightness zone can be assigned a brightness target via the 5 zone target registers. Each control bank has its own set of zone target registers. Therefore, in response to changes in a Brightness Zone at the ALS input, the LED current can transition to a new brightness level. This allows for backlit LCD displays to reduce the LED Current when the ambient light is dim or increase the LED current when the ambient light increases. Each zone boundary register is 8 bits with a full-scale voltage of 2 V. This gives 2 V/255 = 7.8 mV per bit. Figure 14 describes the ambient light to brightness mapping.

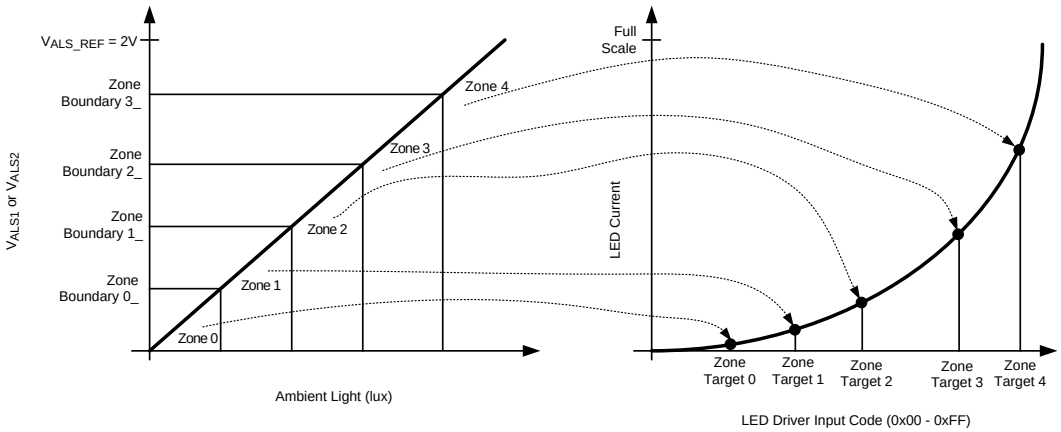


**Figure 14. Ambient Light Input to Backlight Mapping**

### *7.4.10.3 Ambient Light Zone Hysteresis*

For each Zone Boundary there are two Zone Boundary Registers: a Zone Boundary High Register and a Zone Boundary Low Register. The difference between the Zone Boundary High and Zone Boundary Low Register set points (for a specific zone) creates the hysteresis that is required to transition between two adjacent zones. This hysteresis prevents the backlight current from oscillating between zones when the ALS voltage is close to a Zone Boundary Threshold. Figure 15 describes this Zone Boundary Hysteresis. The arrows indicate the direction of the ALS input voltage. The black dots indicate the threshold used when transitioning to a new zone.


Copyright © 2011–2015, Texas Instruments Incorporated

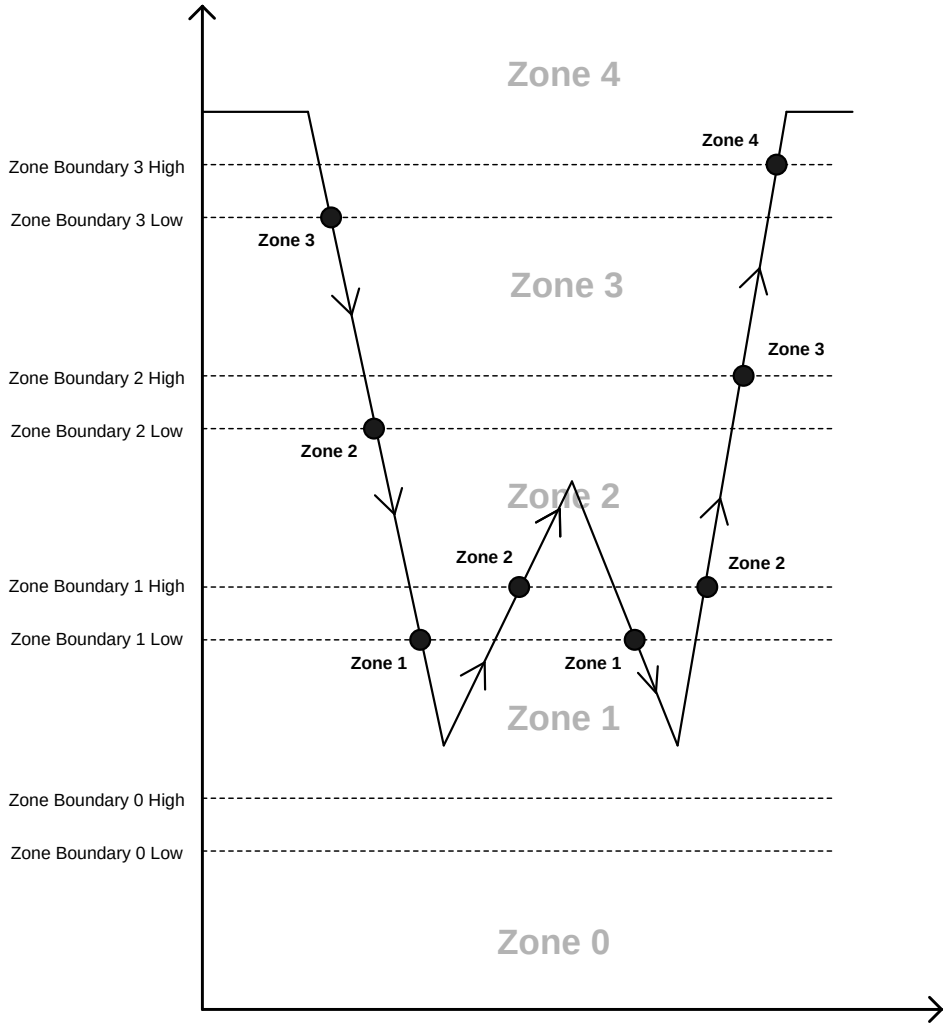


**Figure 15. ALS Zone Boundaries + Hysteresis**

#### *7.4.10.4 PWM Enabled for a Particular Zone*

The active PWM input for a specified control bank can be enabled/disabled for each ALS Brightness Zone. This is done via bits[6:2] of the corresponding Control A, B, or C PWM Registers (see Table 6, Table 7, and Table 8). For example, assuming Control Bank A is being used, then to make the PWM input active in Zones 0, 2, and 4, but not active in Zones 1, and 3; bits[6:2] of the Control A PWM Register would be set to (1, 0, 1, 0, 1).

#### *7.4.10.5 ALS Operation*

Figure 16 shows a functional block diagram of the LM3532's ambient light sensor interface.

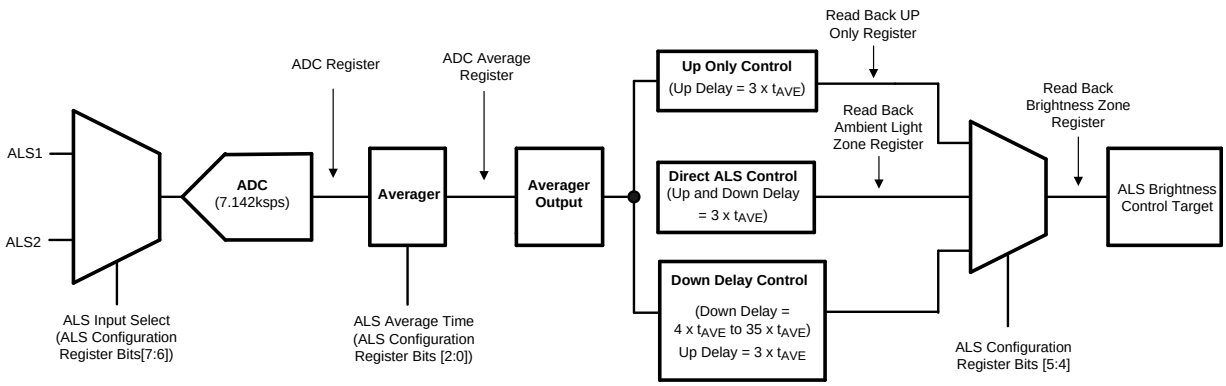


**Figure 16. ALS Functional Block Diagram**

### *7.4.10.6 ALS Input Select and ALS ADC Input*

The internal 8-bit ADC digitizes the active ambient light sensor inputs (ALS1 or ALS2). The active ALS input is determined by the bit settings of the ALS input select bits, bits [7:6] in the ALS Configuration register. The active ALS input can be the average of ALS1 and ALS2, the maximum of ALS1 and ALS2, ALS1 only, or ALS2 only. Once the ALS input select stage selects the active ALS input, the result is sent to the internal 8-bit ADC. For example, if the active ALS input select is set to be the average of ALS1 and ALS2, then the voltage at ALS1 and ALS2 is first averaged, then applied to the ADC. The output of the ADC (ADC Register) is the digitized average value of ALS1 and ALS2.

The LM3532 device's internal ADC samples at 7.143 ksps. ADC timing is shown in Figure 17. When the ALS is enabled (ALS Configuration Register bit [3] = 1) the ADC begins sampling and converting the active ALS input. Each conversion takes 140 µs. After each conversion the ADC register is updated with new data.

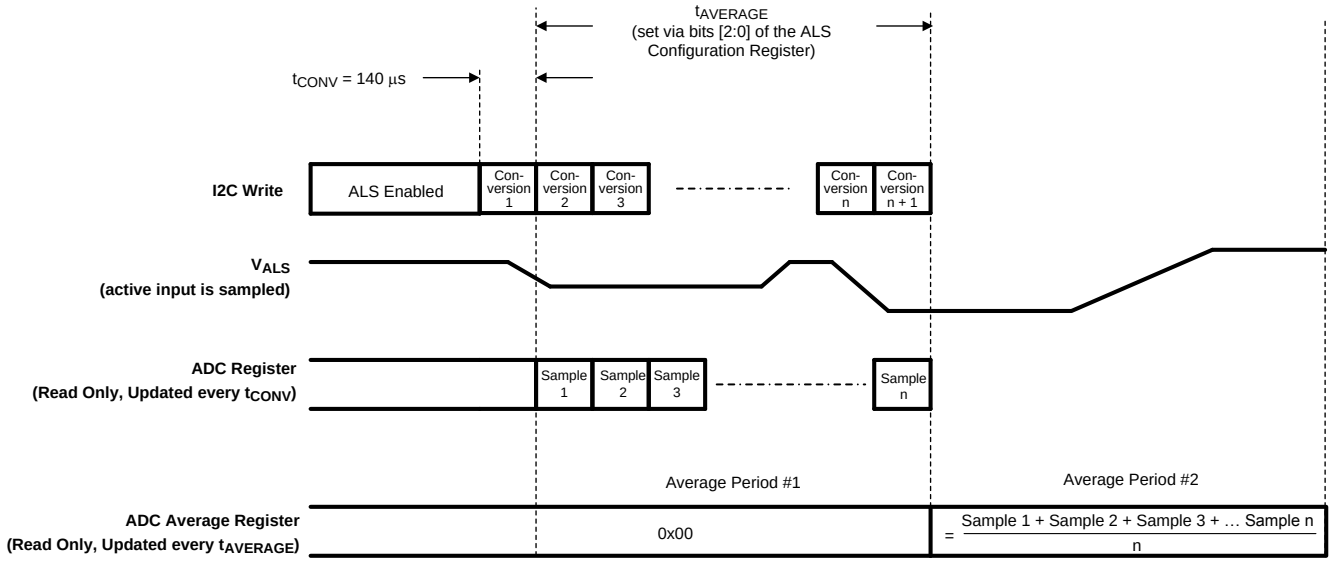


**Figure 17. ADC Timing**

### *7.4.10.7 ALS ADC Readback*

The digitized value of the LM3532 device's ADC is read back from the ADC Readback Register. Once the ALS is enabled, the ADC begins converting the active ALS input and updating the ALS Readback Register every 140 µs. The ADC Readback register contains the updated data after each conversion.


Copyright © 2011–2015, Texas Instruments Incorporated

#### 7.4.10.8 ALS Averaging

ALS averaging is used to filter out any fast changes in the ambient light sensor inputs. This prevents the backlight current from constantly changing due to rapid fluctuations in the ambient light. There are 8 separate averaging periods available for the ALS inputs (see Table 17). During an average period the ADC continually samples at 7.143 ksps. Therefore, during an average period, the ALS Averager output is the average of $7143/t_{AVE}$.

#### 7.4.10.9 ALS ADC Average Readback

The output of the LM3532's averager is read back via the Average ADC Register. This data is the ADC register data, averaged over the programmed ALS average time.

#### 7.4.10.10 Initializing the ALS

On initial start-up of the ALS Block, the Ambient Light Zone defaults to Zone 0. This allows the ALS to start off in a predictable state. The drawback is that Zone 0 is often not representative of the true ALS Brightness Zone because the ALS inputs can get to their ambient light representative voltage much faster then the backlight is allowed to change. In order to avoid a multiple average time wait for the backlight current to get to its correct state, the LM3532 switches over to a fast average period (1.1 ms) on ALS startup. This quickly brings the ALS Brightness Zone (and the backlight current) to its correct setting (see Figure 18).

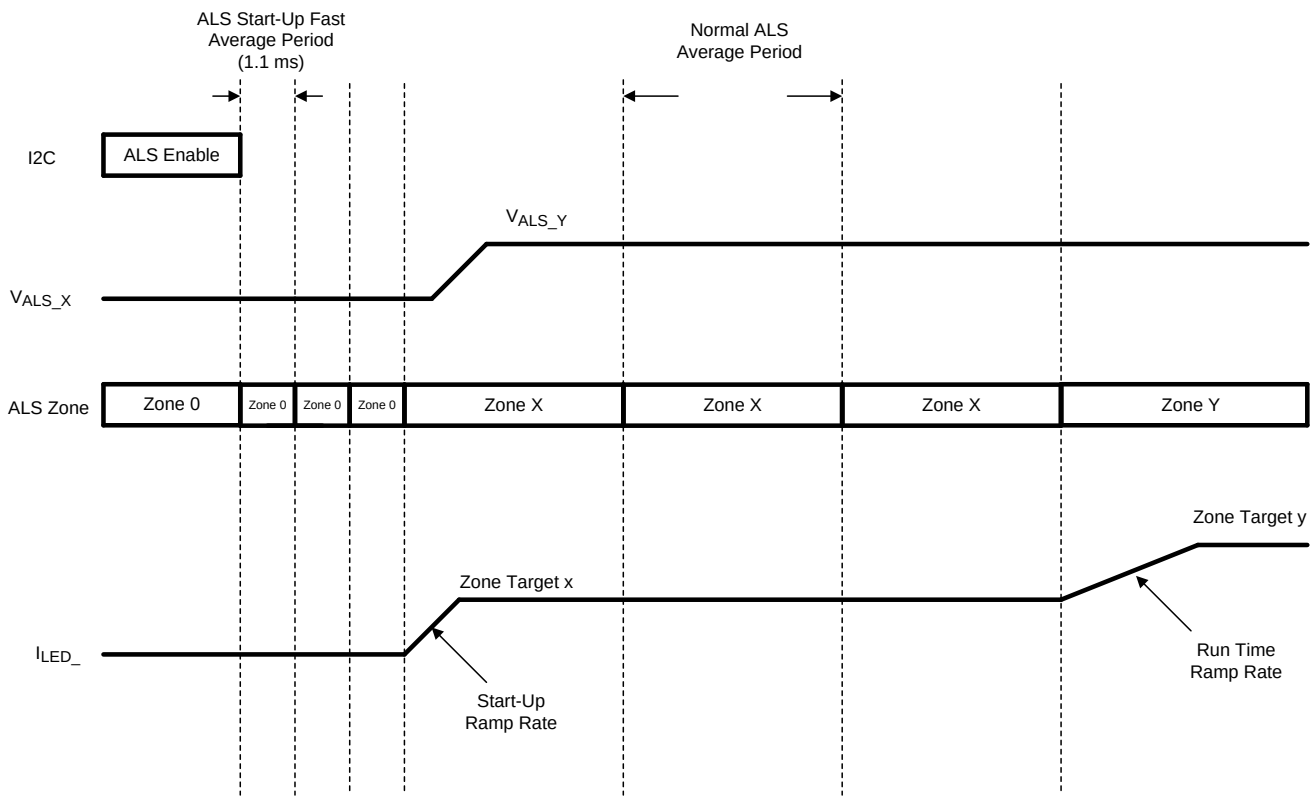


**Figure 18. ALS Start-up Sequence**

#### 7.4.10.11 ALS Operation

The LM3532's Ambient Light Sensor Interface has 3 different algorithms that can be used to control the ambient light to backlight current response.

**ALS Algorithms**

1. Direct ALS Control
2. Down Delay

For each algorithm, the ALS follows these basic rules:

**ALS Rules**

1. For the ALS Interface to force a change in the backlight current (to a higher zone target), the averager output must have shown an increase for 3 consecutive average periods, or an increase and a remain at the new zone for 3 consecutive average periods.
2. For the ALS Interface to force a change in the backlight current (to a lower zone target), the averager output must have shown a decrease for 3 consecutive average periods, or a decrease and remain at the new zone for 3 consecutive average periods.
3. If condition 1 or condition 2 is satisfied, and during the next average period, the averager output changes again in the same direction as the last change, the LED current immediately changes at the beginning of the next average period.
4. If condition 1 or condition 2 is satisfied and the next average period shows no change in the average zone, or shows a change in the opposite direction, then the criteria in step 1 or step 2 must be satisfied again before the ALS interface can force a change in the backlight current.
5. The Averager Output (see Figure 16) contains the zone that is determined from the most recent full average period.
6. The ALS Interface only forces a change in the backlight current at the beginning of an average period.
7. When the ALS forces a change in the backlight current the change is to the brightness target pointed to by the zone in the Averager Output.

#### *7.4.10.12 Direct ALS Control*

In direct ALS control the LM3532's ALS Interface can force the backlight current to either a higher zone target or a lower zone target using the rules described in the ALS Rules Section.

Figure 19 shows the ALS voltage, the current average zone which is the zone determined by averaging the ALS voltage in the current average period, the Averager Output which is the zone determined from the previous full average period, and the target backlight current that is controlled by the ALS Interface. The following steps detail the Direct ALS algorithm:

1. When the ALS is enabled the ALS fast start-up (1.1ms average period) quickly brings the Averager Output to the correct zone. This takes 3 fast average periods or approximately 3.3 ms.
2. The 1st average period the ALS voltage averages to Zone 4.
3. The 2nd average period the ALS voltage averages to Zone 3.
4. The 3rd average period the ALS voltage averages to Zone 3 and the Averager Output shows a change from Zone 4 to Zone 3.
5. The 4th average period the ALS voltage averages to Zone 2 and the Averager Output remains at its changed state of Zone 3.
6. The 5th average period the ALS voltage averages to Zone 1. The Averager Output shows a change from Zone 3 to Zone 2. Because this is the 3rd average period that the Averager Output has shown a change in the decreasing direction from the initial Zone 4, the backlight current is forced to change to the current Averager Output (Zone 2's) target current.
7. The 6th average period the ALS voltage averages to Zone 2. The Averager Output changes from Zone 2 to Zone 1. Because this is in the same direction as the previous change, the backlight current is forced to change to the current Averager Output (Zone 1's) target current.
8. The 7th average period the ALS voltage averages to Zone 3. The Averager Output changes from Zone 1 to Zone 2. Because this change is in the opposite direction from the previous change, the backlight current remains at Zone 1's target.
9. The 8th average period the ALS voltage averages to Zone 3. The Averager Output changes from Zone 2 to Zone 3.
10. The 9th average period the ALS voltage averages to Zone 3. The Averager Output remains at Zone 3. Because this is the 3rd average period that the Averager Output has shown a change in the increasing direction from the initial Zone 1, the backlight current is forced to change to the current Averager Output (Zone 3's) target current.
11. The 10th average period the ALS voltage averages to Zone 4. The Averager Output remains at Zone 3.
12. The 11th average period the ALS voltage averages to Zone 4. The Averager Output changes to Zone 4.


Copyright © 2011–2015, Texas Instruments Incorporated

13. The 12th average period the ALS voltage averages to Zone 4. The Averager Output remains at Zone 4.
14. The 13th average period the ALS voltage averages to Zone 4. The Averager Output remains at Zone 4. Because this is the 3rd average period that the Averager Output has shown a change in the increasing direction from the initial Zone 3, the backlight current is forced to change to the current Averager Output (Zone 4's) target current.

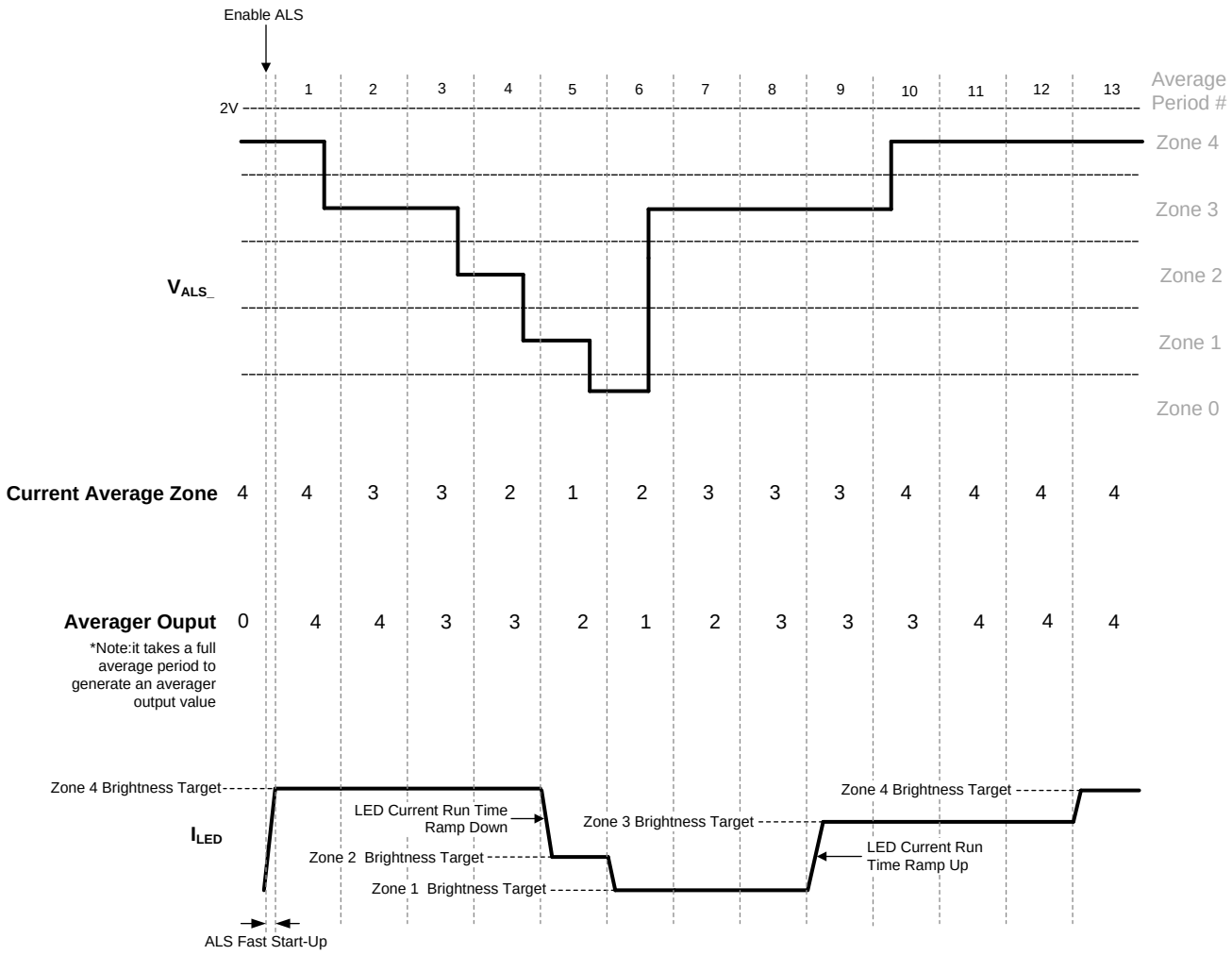


**Figure 19. Direct ALS Control**

### 7.4.11 Down Delay

The down-delay algorithm uses all the same rules from the ALS Rules section, except it provides for adding additional average period delays required for decreasing transitions of the Averager Output, before the LED current is programmed to a lower zone target current. The additional average period delays are programmed via the ALS Down-Delay register. The register provides 32 settings for increasing the down delay from 3 extra (code 00000) up to 34 extra (code 11111). For example, if the down-delay algorithm is enabled, and the ALS Down-Delay register were programmed with 0x00 (3 extra delays), then the Averager Output would need to see 6 consecutive changes in decreasing Zones (or 6 consecutive average periods that changed and remained lower), before the backlight current was programmed to the lower zones target current. Referring to Figure 20, assume that Down Delay is enabled and the ALS Down-Delay register is programmed with 0x02 (5 extra delays, 8 average period total delay for downward changes in the backlight target current):

1. When the ALS is enabled the ALS fast start-up (1.1 ms average period) quickly brings the Averager Output to the correct zone. This takes 3 fast average periods or approximately 3.3 ms.
2. The first average period the ALS averages to Zone 3.

3. The second average period the ALS averages to Zone 2. The Averager Output remains at Zone 3.
4. The 3rd through 7th average period the ALS input averages to Zone 2, and the Averager Output stays at Zone 2.
5. The 8th average period the ALS input averages to Zone 4. The Averager Output remains at Zone 2.
6. The 9th and 10th average periods the ALS input averages to Zone 4. The Averager Output is at Zone 4. Because the Averager Output increased from Zone 2 to Zone 4 and the required Down Delay time was not met (8 average periods), the backlight current was never changed to the Zone 2's target current.
7. The 11th average period the ALS input averages to Zone 2. The Averager Output remains at Zone 4. Because this is the 3rd consecutive average period where the Averager Output has shown a change since the change from Zone 2, the backlight current transitions to Zone 4's target current.
8. The 12th through 26th average periods the ALS input averages to Zone 2. The Averager Output remains at Zone 2. At the start of average period 20 the Down Delay algorithm has shown the required 8 average period delay from the initial change from Zone 4 to Zone 2. As a result the backlight current is programmed to Zone 2's target current.

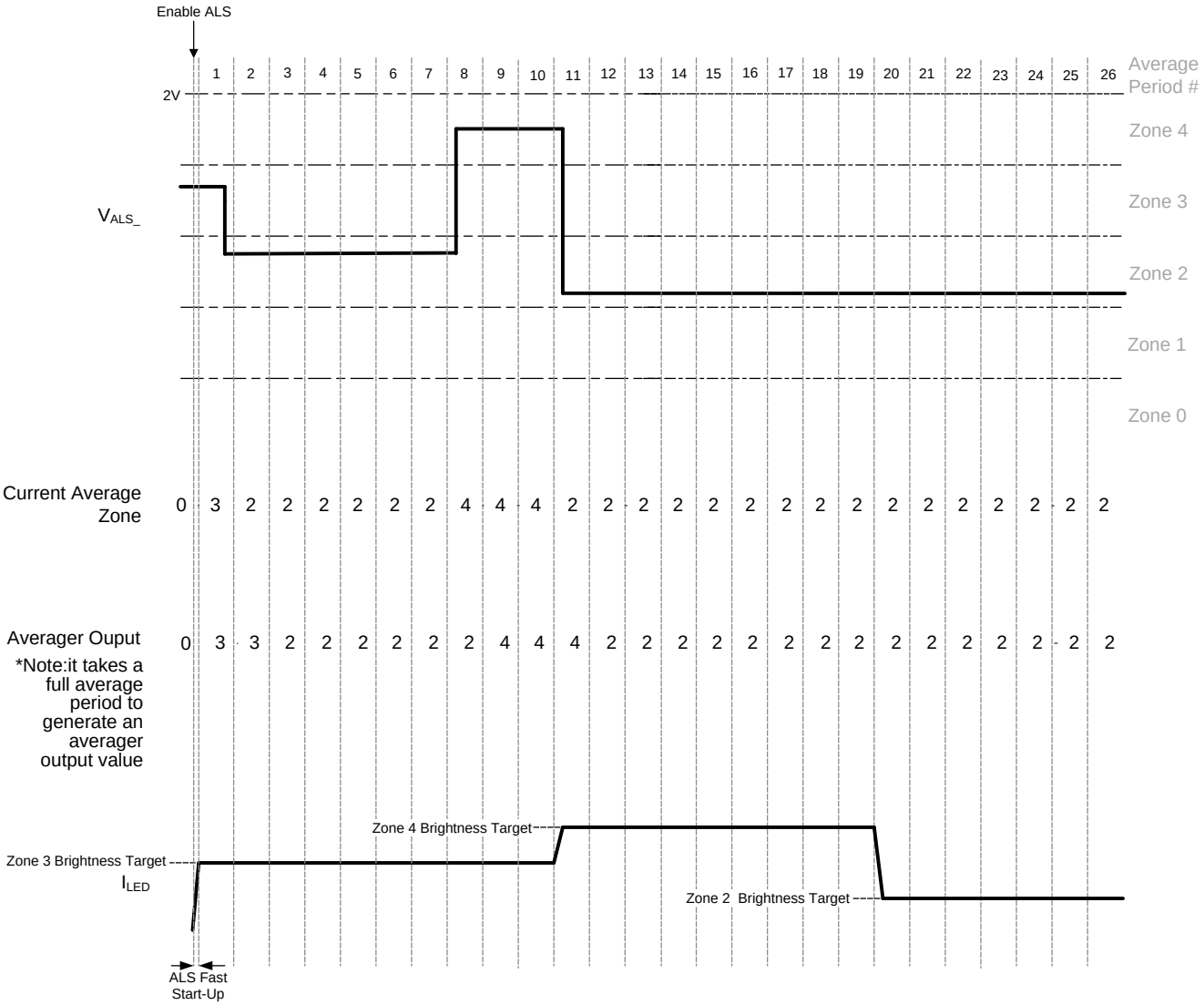


**Figure 20. ALS Down-Delay Control**


Copyright © 2011–2015, Texas Instruments Incorporated

## 7.5 Programming

### 7.5.1 I²C-Compatible Interface

#### *7.5.1.1 Start and Stop Conditions*

The LM3532 is controlled via an I²C-compatible interface. START and STOP conditions classify the beginning and the end of the I²C session. A START condition is defined as SDA transitioning from HIGH-to-LOW while SCL is HIGH. A STOP condition is defined as SDA transitioning from LOW-to-HIGH while SCL is HIGH. The I²C master always generates the START and STOP conditions. The I²C bus is considered busy after a START condition and free after a STOP condition. During data transmission, the I²C master can generate repeated START conditions. A START and a repeated START conditions are equivalent function-wise. The data on SDA must be stable during the HIGH period of the clock signal (SCL). In other words, the state of SDA can only be changed when SCL is LOW.

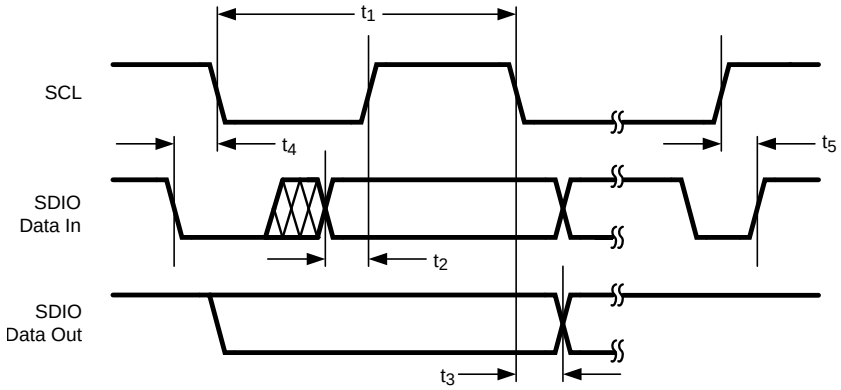


**Figure 21. Start And Stop Sequences**

#### *7.5.1.2 I²C-Compatible Address*

The 7-bit chip address for the LM3532 is (0x38) . After the START condition, the I²C master sends the 7-bit chip address followed by an eighth bit (LSB) read or write (R/W). R/W = 0 indicates a WRITE and R/W = 1 indicates a READ. The second byte following the chip address selects the register address to which the data is written. The third byte contains the data for the selected register.

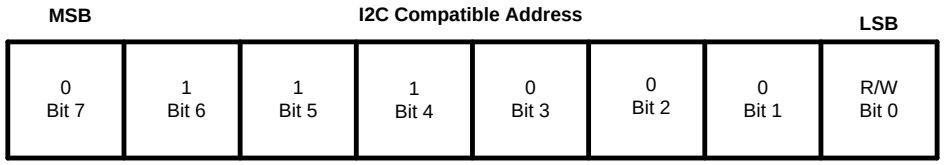


**Figure 22. I²C-Compatible Chip Address (0x38)**

#### *7.5.1.3 Transferring Data*

Every byte on the SDA line must be eight bits long, with the most significant bit (MSB) transferred first. Each byte of data must be followed by an acknowledge bit (ACK). The acknowledge related clock pulse (9th clock pulse) is generated by the master. The master then releases SDA (HIGH) during the 9th clock pulse. The LM3532 pulls down SDA during the 9th clock pulse, signifying an acknowledge. An acknowledge is generated after each byte has been received.

## 7.6 Register Maps

**Table 2. LM3532 Register Descriptions**

| NAME | ADDRESS | POWER-ON RESET |
|---|---|---|
| $I^2C$ Address | 0x38 (7 bit), 0x70 for Write and 0x71 for Read | |
| Output Configuration | 0x10 | 0xE4 |
| Startup/Shutdown Ramp Rate | 0x11 | 0xC0 |
| Run Time Ramp Rate | 0x12 | 0xC0 |
| Control A PWM | 0x13 | 0x82 |
| Control B PWM | 0x14 | 0x82 |
| Control C PWM | 0x15 | 0x82 |
| Control A Brightness | 0x16 | 0xF1 |
| Control A Full-Scale Current | 0x17 | 0xF3 |
| Control B Brightness | 0x18 | 0xF1 |
| Control B Full-Scale Current | 0x19 | 0xF3 |
| Control C Brightness | 0x1A | 0xF1 |
| Control C Full-Scale Current | 0x1B | 0xF3 |
| Feedback Enable | 0x1C | 0xFF |
| Control Enable | 0x1D | 0xF8 |
| ALS1 Resistor Select | 0x20 | 0xE0 |
| ALS2 Resistor Select | 0x21 | 0xE0 |
| ALS Down Delay | 0x22 | 0xE0 |
| ALS Configuration | 0x23 | 0x44 |
| ALS Zone Information | 0x24 | 0xF0 |
| ALS Brightness Zone | 0x25 | 0xF8 |
| ADC | 0x27 | 0x00 |
| ADC Average | 0x28 | 0x00 |
| ALS Zone Boundary 0 High | 0x60 | 0x35 |
| ALS Zone Boundary 0 Low | 0x61 | 0x33 |
| ALS Zone Boundary 1 High | 0x62 | 0x6A |
| ALS Zone Boundary 1 Low | 0x63 | 0x66 |
| ALS Zone Boundary 2 High | 0x64 | 0xA1 |
| ALS Zone Boundary 2 Low | 0x65 | 0x99 |
| ALS Zone Boundary 3 High | 0x66 | 0xDC |
| ALS Zone Boundary 3 Low | 0x67 | 0xCC |
| Control A Zone Target 0 | 0x70 | 0x33 |
| Control A Zone Target 1 | 0x71 | 0x66 |
| Control A Zone Target 2 | 0x72 | 0x99 |
| Control A Zone Target 3 | 0x73 | 0xCC |
| Control A Zone Target 4 | 0x74 | 0xFF |
| Control B Zone Target 0 | 0x75 | 0x33 |
| Control B Zone Target 1 | 0x76 | 0x66 |
| Control B Zone Target 2 | 0x77 | 0x99 |
| Control B Zone Target 3 | 0x78 | 0xCC |
| Control B Zone Target 4 | 0x79 | 0xFF |
| Control C Zone Target 0 | 0x7A | 0x33 |
| Control C Zone Target 1 | 0x7B | 0x66 |
| Control C Zone Target 2 | 0x7C | 0x99 |
| Control C Zone Target 3 | 0x7D | 0xCC |
| Control C Zone Target 4 | 0x7E | 0xFF |


Copyright © 2011–2015, Texas Instruments Incorporated

### 7.6.1 Output Configuration

Table 3 configures how the three control banks are routed to the current sinks (ILED1, ILED2, ILED3)

**Table 3. Output Configuration Register Description (Address 0x10)**

| Bit [7:6] | Bits [5:4]<br>ILED3 Control | Bits [3:2]<br>ILED2 Control | Bits [1:0]<br>ILED1 Control |
|---|---|---|---|
| Not Used | 00 = ILED3 is controlled by Control A PWM and Control A Brightness Registers<br>01 = ILED3 is controlled by Control B PWM and Control B Brightness Registers<br>1X = ILED3 is controlled by Control C PWM and Control C Brightness Registers **(default)** | 00 = ILED2 is controlled by Control A PWM and Control A Brightness Registers<br>01 = ILED2 is controlled by Control B PWM and Control B Brightness Registers **(default)**<br>1X = ILED2 is controlled by Control C PWM and Control C Brightness Registers | 00 = ILED1 is controlled by Control A PWM and Control A Brightness Registers **(default)**<br>01 = ILED1 is controlled by Control B PWM and Control B Brightness Registers<br>1X = ILED1 is controlled by Control C PWM and Control C Brightness Registers |

### 7.6.2 Start-up/Shutdown Ramp Rate

This register controls the ramping of the LED current in current sinks ILED1, ILED2, and ILED3 during start-up and shutdown. The startup ramp rates/step are from when the device is enabled via $I^2C$ to when the target current is reached. The Shutdown ramp rates/step are from when the device is shut down via $I^2C$ until the LED current is 0. To start up and shut down the current sinks via $I^2C$ (see Equation 6).

**Table 4. Start-up/Shutdown Ramp Rate Register Description (Address 0x11)**

| Bits [7:6] | Bits [5:3]<br>Shutdown Ramp | Bits [2:0]<br>Startup Ramp |
|---|---|---|
| Not Used | 000 = 8µs/step (2.048ms from Full-Scale to 0) **(default)**<br>001 = 1.024 ms/step (261 ms)<br>010 = 2.048 ms/step (522 ms)<br>011 = 4.096 ms/step (1.044s)<br>100 = 8.192 ms/step (2.088s)<br>101 = 16.384 ms/step (4.178s)<br>110 = 32.768 ms/step (8.356s)<br>111 = 65.536 ms/step (16.711s) | 000 = 8µs/step (2.048ms from Full-Scale to 0) **(default)**<br>001 = 1.024 ms/step (261ms)<br>010 = 2.048 ms/step (522ms)<br>011 = 4.096 ms/step (1.044s)<br>100 = 8.192 ms/step (2.088s)<br>101 = 16.384 ms/step (4.178s)<br>110 = 32.768 ms/step (8.356s)<br>111 = 65.536 ms/step (16.711s) |

### 7.6.3 Run-Time Ramp Rate

This register controls the ramping of the current in current sinks ILED1, ILED2, and ILED3. The Run Time ramp rates/step are from one current set-point to another after the device has reached its initial target set point from turn-on.

**Table 5. Run Time Ramp Rate Register Description (Address 0x12)**

| Bits [7:6] | Bits [5:3]<br>Ramp Down | Bits [2:0]<br>Ramp Up |
|---|---|---|
| Not Used | 000 = 8µs/step **(default)**<br>001 = 1.024 ms/step<br>010 = 2.048 ms/step<br>011 = 4.096 ms/step<br>100 = 8.192 ms/step<br>101 = 16.384 ms/step<br>110 = 32.768 ms/step<br>111 = 65.536 ms/step | 000 = 8µs/step **(default)**<br>001 = 1.024 ms/step<br>010 = 2.048 ms/step<br>011 = 4.096 ms/step<br>100 = 8.192 ms/step<br>101 = 16.384 ms/step<br>110 = 32.768 ms/step<br>111 = 65.536 ms/step |

Copyright © 2011–2015, Texas Instruments Incorporated

### 7.6.4 Control A PWM

This register configures which PWM input (PWM1 or PWM2) is mapped to Control Bank A and which zones the selected PWM input is active in.

**Table 6. Control A Pwm Register Description (Address 0x13)**

| Bit 7<br>N/A | Bit 6<br>Zone 4 PWM Enable | Bit 5<br>Zone 3 PWM Enable | Bit 2<br>Zone 2 PWM Enable | Bit 2<br>Zone 1 PWM Enable | Bit 2<br>Zone 0 PWM Enable | Bit 1<br>PWM Input Polarity | Bit 0<br>PWM Select |
|---|---|---|---|---|---|---|---|
| Not Used | 0 = Active PWM input is disabled in Zone 4 **(default)** | 0 = Active PWM input is disabled in Zone 3 **(default)** | 0 = Active PWM input is disabled in Zone 2 **(default)** | 0 = Active PWM input is disabled in Zone 1 **(default)** | 0 = Active PWM input is disabled in Zone 0 **(default)** | 0 = active low polarity | 0 = PWM1 input is mapped to Control Bank A **(default)** |
| | 1 = Active PWM input is enabled in Zone 4 | 1 = Active PWM input is enabled in Zone 3 | 1 = Active PWM input is enabled in Zone 2 | 1 = Active PWM input is enabled in Zone 1 | 1 = Active PWM input is enabled in Zone 0 | 1 = active high polarity **(default)** | 1 = PWM2 is mapped to Control Bank A |

### 7.6.5 Control B PWM

This register configures which PWM input (PWM1 or PWM2) is mapped to Control Bank B and which zones the selected PWM input is active in.

**Table 7. Control B Pwm Register Description (Address 0x14)**

| Bit 7<br>N/A | Bit 6<br>Zone 4 PWM Enable | Bit 5<br>Zone 3 PWM Enable | Bit 2<br>Zone 2 PWM Enable | Bit 2<br>Zone 1 PWM Enable | Bit 2<br>Zone 0 PWM Enable | Bit 1<br>PWM Input Polarity | Bit 0<br>PWM Select |
|---|---|---|---|---|---|---|---|
| Not Used | 0 = Active PWM input is disabled in Zone 4 **(default)** | 0 = Active PWM input is disabled in Zone 3 **(default)** | 0 = Active PWM input is disabled in Zone 2 **(default)** | 0 = Active PWM input is disabled in Zone 1 **(default)** | 0 = Active PWM input is disabled in Zone 0 **(default)** | 0 = active low polarity | 0 = PWM1 input is mapped to Control Bank B **(default)** |
| | 1 = Active PWM input is enabled in Zone 4 | 1 = Active PWM input is enabled in Zone 3 | 1 = Active PWM input is enabled in Zone 2 | 1 = Active PWM input is enabled in Zone 1 | 1 = Active PWM input is enabled in Zone 0 | 1 = active high polarity **(default)** | 1 = PWM2 is mapped to Control Bank B |

### 7.6.6 Control C PWM

This register configures which PWM input (PWM1 or PWM2) is mapped to Control Bank C and which zones the selected PWM input is active in.

**Table 8. Control C Pwm Register Description (Address 0x15)**

| Bit 7<br>N/A | Bit 6<br>Zone 4 PWM Enable | Bit 5<br>Zone 3 PWM Enable | Bit 2<br>Zone 2 PWM Enable | Bit 2<br>Zone 1 PWM Enable | Bit 2<br>Zone 0 PWM Enable | Bit 1<br>PWM Input Polarity | Bit 0<br>PWM Select |
|---|---|---|---|---|---|---|---|
| Not Used | 0 = Active PWM input is disabled in Zone 4 **(default)** | 0 = Active PWM input is disabled in Zone 3 **(default)** | 0 = Active PWM input is disabled in Zone 2 **(default)** | 0 = Active PWM input is disabled in Zone 1 **(default)** | 0 = Active PWM input is disabled in Zone 0 **(default)** | 0 = active low polarity | 0 = PWM1 input is mapped to Control Bank C **(default)** |
| | 1 = Active PWM input is enabled in Zone 4 | 1 = Active PWM input is enabled in Zone 3 | 1 = Active PWM input is enabled in Zone 2 | 1 = Active PWM input is enabled in Zone 1 | 1 = Active PWM input is enabled in Zone 0 | 1 = active high polarity **(default)** | 1 = PWM2 is mapped to Control Bank C |

### 7.6.7 Control A Brightness Configuration

The Control A Brightness Configuration Register has 3 functions:

1. Selects how the LED current sink which is mapped to Control Bank A is controlled (either directly through the $I^2C$ or via the ALS interface).


Copyright © 2011–2015, Texas Instruments Incorporated

2. Programs the LED current mapping mode for Control Bank A (Linear or Exponential).
3. Programs which Control A Zone Target Register is the Brightness Register for Bank A in $I^2C$ Current Control.

**Table 9. Control A Brightness Configuration Register Description (Address 0x16)**

| Bits [7:5]<br>Not Used | Bits [4:2]<br>Control A Brightness Pointer ($I^2C$ Current Control Only) | Bit 1<br>LED Current Mapping Mode | Bit 0<br>Bank A Current Control |
|---|---|---|---|
| N/A | 000 = Control A Zone Target 0<br>001 = Control A Zone Target 1<br>010 = Control A Zone Target 2<br>011 = Control A Zone Target 3<br>1XX = Control A Zone Target 4 **(default)** | 0 = Exponential Mapping **(default)**<br>1 = Linear Mapping | 0 = ALS Current Control<br>1 = $I^2C$ Current Control **(default)** |

### 7.6.8 Control B Brightness Configuration

The Control B Brightness Configuration Register has 3 functions:

1. Selects how the LED current sink which is mapped to Control Bank B is controlled (either directly through the $I^2C$ or via the ALS interface).
2. Programs the LED current mapping mode for Control Bank B (Linear or Exponential).
3. Programs which Control B Zone Target Register is the Brightness Register for Bank B in $I^2C$ Current Control.

**Table 10. Control B Brightness Configuration Register Description (Address 0x18)**

| Bits [7:5]<br>Not Used | Bits [4:2]<br>Control A Brightness Pointer ($I^2C$ Current Control Only) | Bit 1<br>LED Current Mapping Mode | Bit 0<br>Bank B Current Control |
|---|---|---|---|
| N/A | 000 = Control B Zone Target 0<br>001 = Control B Zone Target 1<br>010 = Control B Zone Target 2<br>011 = Control B Zone Target 3<br>1XX = Control B Zone Target 4 **(default)** | 0 = Exponential Mapping **(default)**<br>1 = Linear Mapping | 0 = ALS Current Control<br>1 = $I^2C$ Current Control **(default)** |

### 7.6.9 Control C Brightness Configuration

The Control C Brightness Configuration Register has 3 functions:

1. Selects how the LED current sink which is mapped to Control Bank C is controlled (either directly through the $I^2C$ or via the ALS interface)
2. Programs the LED current mapping mode for Control Bank C (Linear or Exponential)
3. Programs which Control C Zone Target Register is the Brightness Register for Bank C in $I^2C$ Current Control

**Table 11. Control C Brightness Configuration Register Description (Address 0x1a)**

| Bits [7:5]<br>Not Used | Bits [4:2]<br>Control C Brightness Pointer ($I^2C$ Current Control Only) | Bit 1<br>LED Current Mapping Mode | Bit 0<br>Bank C Current Control |
|---|---|---|---|
| N/A | 000 = Control C Zone Target 0<br>001 = Control C Zone Target 1<br>010 = Control C Zone Target 2<br>011 = Control C Zone Target 3<br>1XX = Control C Zone Target 4 **(default)** | 0 = Exponential Mapping **(default)**<br>1 = Linear Mapping | 0 = ALS Current Control<br>1 = $I^2C$ Current Control **(default)** |

### 7.6.10 Control A, B, and C Full-Scale Current

These registers program the full-scale current setting for the current sink(s) assigned to Control Bank A, B, and C. Each Control Bank has its own full-scale current setting (Control Bank A, Address 0x17), (Control Bank B, address 0x19), (Control Bank C, address 0x1B).


Copyright © 2011–2015, Texas Instruments Incorporated

**Table 12. Control A/B/C Full-Scale Current Registers Descriptions (Address 0x17, 0x19, 0x1b)**

| Bits [7:5]<br>Not Used | Bits [4:0]<br>Control A/B/C Full-Scale Current Select Bits |
|---|---|
| N/A | 00000 = 5 mA |
| | 00001 = 5.8 mA |
| | 00010 = 6.6 mA |
| | 00011 = 7.4 mA |
| | 00100 = 8.2 mA |
| | 00101 = 9 mA |
| | 00110 = 9.8 mA |
| | 00111 = 10.6 mA |
| | 01000 = 11.4 mA |
| | 01001 = 12.2 mA |
| | 01010 = 13 mA |
| | 01011 = 13.8 mA |
| | 01100 = 14.6 mA |
| | 01101 = 15.4 mA |
| | 01110 = 16.2 mA |
| | 01111 = 17 mA |
| | 10000 = 17.8 mA |
| | 10001 = 18.6mA |
| | 10010 = 19.4 mA |
| | 10011 = 20.2 mA **(default)** |
| | 10100 = 21 mA |
| | 10101 = 21.8 mA |
| | 10110 = 22.6 mA |
| | 10111 = 23.4 mA |
| | 11000 = 24.2 mA |
| | 11001 = 25 mA |
| | 11010 = 25.8 mA |
| | 11011 = 26.6 mA |
| | 11100 = 27.4 mA |
| | 11101 = 28.2 mA |
| | 11110 = 29 mA |
| | 11111 = 29.8 mA |

### 7.6.11 Feedback Enable

The Feedback Enable Register configures which current sinks are or are not part of the boost control loop.

**Table 13. Feedback Enable Register Description (Address 0x1c)**

| Bits [7:3]<br>Not Used | Bit 2<br>ILED3 Feedback Enable | Bit 1<br>ILED2 Feedback Enable | Bit 0<br>ILED1 Feedback Enable |
|---|---|---|---|
| N/A | 0 = ILED3 is not part of the boost control loop<br>1 = ILED3 is part of the boost control loop **(default)** | 0 = ILED2 is not part of the boost control loop<br>1 = ILED2 is part of the boost control loop **(default)** | 0 = ILED1 is not part of the boost control loop<br>1 = ILED1 is part of the boost control loop **(default)** |

### 7.6.12 Control Enable

The Control Enable register contains the bits to turn on/off the individual Control Banks (A, B, or C). Once one of these bits is programmed high, the current sink(s) assigned to the selected control banks are enabled.

**Table 14. Control Enable Register Description (Address 0x1d)**

| Bits (7:3)<br>(Not Used) | Bit 2<br>Control C Enable | Bit 1<br>Control B Enable | Bit 0<br>Control A Enable |
|---|---|---|---|
| N/A | 0 = Control C is disabled **(default)**<br>1 = Control C is enabled | 0 = Control B is disabled **(default)**<br>1 = Control B is enabled | 0 = Control A is disabled **(default)**<br>1 = Control A is enabled |

### 7.6.13 ALS1 and ALS2 Resistor Select

The ALS Resistor Select Registers program the internal pulldown resistor at the ALS1/ALS2 input. Each ALS input has its own resistor select register (ALS1 Resistor Select Register, Address 0x20) and (ALS2 Resistor Select Register, Address 0x21). Each ALS input can be set independent of the other. There are 32 available resistors including a high impedance setting. The full-scale input voltage range at either ALS input is 2V.


Copyright © 2011–2015, Texas Instruments Incorporated

**Table 15. ALS Resistor Select Register Description (Address 0x20, Address 0x21)**

| Bit [7:5]<br>Not Used | Bit [4:0]<br>ALS1/ALS2 Resistor Select Bits |
|---|---|
| N/A | 00000 = High Impedance **(default)** |
| | 00001 = 37 kΩ |
| | 00010 = 18.5 kΩ |
| | 00011 = 12.33 kΩ |
| | 00100 = 9.25 kΩ |
| | 00101 = 7.4 kΩ |
| | 00110 = 6.17 kΩ |
| | 00111 = 5.29 kΩ |
| | 01000 = 4.63 kΩ |
| | 01001 = 4.11 kΩ |
| | 01010 = 3.7 kΩ |
| | 01011 = 3.36 kΩ |
| | 01100 = 3.08 kΩ |
| | 01101 = 2.85 kΩ |
| | 01110 = 2.64 kΩ |
| | 01111 = 2.44 kΩ |
| | 10000 = 2.31 kΩ |
| | 10001 = 2.18 kΩ |
| | 10010 = 2.06 kΩ |
| | 10011 = 1.95 kΩ |
| | 10100 = 1.85 kΩ |
| | 10101 = 1.76 kΩ |
| | 10110 = 1.68 kΩ |
| | 10111 = 1.61 kΩ |
| | 11000 = 1.54 kΩ |
| | 11001 = 1.48 kΩ |
| | 11010 = 1.42 kΩ |
| | 11011 = 1.37 kΩ |
| | 11100 = 1.32 kΩ |
| | 11101 = 1.28 kΩ |
| | 11110 = 1.23 kΩ |
| | 11111 = 1.19 kΩ |

### 7.6.14 ALS Down Delay

The ALS Down-Delay Register adds additional average time delays for ALS changes in the backlight current during falling ALS input voltages. Code 00000 adds 3 extra average period delays on top of the 3 default delays (6 total). Code 11111 adds 34 extra average period delays.

**Table 16. ALS Down Delay Register Description (Address 0x22)**

| Bits [7:6]<br>Not Used | Bit [5]<br>ALS Fast Start-up Enable | Bits [4:0]<br>Down Delay |
|---|---|---|
| N/A | 0 = ALS Fast start-up is Disabled<br>1 = ALS Fast start-up is Enabled **(default)** | 00000 = 6 total average period delay for down-delay control **(default)**<br>:<br>11111 = 34 total average periods of delay for down delay control |

### 7.6.15 ALS Configuration

The ALS Configuration register controls the ALS average times, the ALS enable bit, and the ALS input select.

**Table 17. ALSConfiguration Register Description (Address 0x23)**

| Bits [7:6]<br>ALS Input Select | Bit [5:4]<br>ALS Control | Bit 3<br>ALS Enable | Bits [2:0]<br>ALS Average Time |
|---|---|---|---|
| 00 = Average of ALS1 and ALS2 is used to determine backlight current<br>01 = Only the ALS1 input is used to determine backlight current **(default)**<br>10 = Only the ALS2 input is used to determine the backlight current<br>11 = The maximum of ALS1 and ALS2 is used to determine the backlight current | 00 = Direct ALS Control. ALS inputs respond to up and down transitions **(default)**<br>01 = This setting is for a future mode.<br>1X = Down Delay Control. Extra delays of 3 x $t_{AVE}$ to 34 x $t_{AVE}$ are added for down transitions, before the new backlight target is programmed. (see Down Delay section). | 0 = ALS is disabled **(default)**<br>1 = ALS is enabled | 000 = 17.92 ms<br>001 = 35.84 ms<br>010 = 71.68 ms<br>011 = 143.36 ms<br>100 = 286.72 ms **(default)**<br>101 = 573.44 ms<br>110 = 1146.88 ms<br>111 = 2293.76 ms |

### 7.6.16 ALS Zone Readback / Information

The ALS Zone Readback and ALS Zone Information Readback registers each contain information on the current ambient light brightness zone. The ALS Zone Readback register contains the ALS Zone after the averager and discriminator block and reflects both up and down changes in the ambient light brightness zone. The ALS Zone Information register reflects the contents of either the ALS Zone Readback register (with up and down transition). This register also includes a Zone Change bit (bit 3) which is written with a 1 each time the ALS zone changes. This bit is cleared upon read back of the ALS Zone Information register.

**Table 18. ALS Zone Information Register Description (Address 0x24)**

| Bits [7:4]<br>Not Used | Bit 3<br>Zone Change Bit | Bits [2:0]<br>Brightness Zone |
|---|---|---|
| N/A | 0 = No change in ALS Zone **(default)**<br>1 = There was a change in the ALS Zone since the last read of this register. This bit is cleared on read back. | 000 = Zone 0 **(default)**<br>001 = Zone 1<br>010 = Zone 2<br>011 = Zone 3<br>1XX = Zone 4 |

**Table 19. ALS Zone Readback Register Description (Address 0x25)**

| Bits [7:3]<br>Not Used | Bits [2:0]<br>Brightness Zone |
|---|---|
| N/A | 000 = Zone 0 **(default)**<br>001 = Zone 1<br>010 = Zone 2<br>011 = Zone 3<br>1XX = Zone 4 |


Copyright © 2011–2015, Texas Instruments Incorporated

### 7.6.17 ALS Zone Boundaries

There are 4 ALS Zone Boundary registers which form the boundaries for the 5 Ambient Light Zones. Each Zone Boundary register is 8 bits with a maximum voltage of 2V. This gives a step size for each Zone Boundary Register bit of:

$$\text{ZoneBoundaryLSB} = \frac{2\text{V}}{255} = 7.8\,\text{mV} \tag{4}$$

| |
|---|
| ALS Zone Boundary 0 High (Address 0x60), **default = 0x35 (415.7 mV)** |
| ALS Zone Boundary 0 Low (Address 0x61), **default = 0x33 (400 mV)** |
| ALS Zone Boundary 1 High (Address 0x62), **default = 0x6A (831.4 mV)** |
| ALS Zone Boundary 1 Low (Address 0x63), **default = 0x66 (800 mV)** |
| ALS Zone Boundary 2 High (Address 0x64), **default = 0xA1 (1262.7 mV)** |
| ALS Zone Boundary 2 Low (Address 0x65), **default = 0x99 (1200 mV)** |
| ALS Zone Boundary 3 High (Address 0x66), **default = 0xDC (1725.5 mV)** |
| ALS Zone Boundary 3 Low (Address 0x67), **default = 0xCC (1600 mV)** |

### 7.6.18 Zone Target Registers

There are 3 groups of Zone Target Registers (Control A, Control B, and Control C). The Zone Target registers have 2 functions. In Ambient Light Current control, they map directly to the corresponding ALS Zone. When the active ALS input lands within the programmed Zone, the backlight current is programmed to the corresponding zone target registers set point (see below).

| |
|---|
| Control A Zone Target Register 0 maps directly to Zone 0 (Address 0x70) |
| Control A Zone Target Register 1 maps directly to Zone 1 (Address 0x71) |
| Control A Zone Target Register 2 maps directly to Zone 2 (Address 0x72) |
| Control A Zone Target Register 3 maps directly to Zone 3 (Address 0x73) |
| Control A Zone Target Register 4 maps directly to Zone 4 (Address 0x74) |
| |
| Control B Zone Target Register 0 maps directly to Zone 0 (Address 0x75) |
| Control B Zone Target Register 1 maps directly to Zone 1 (Address 0x76) |
| Control B Zone Target Register 2 maps directly to Zone 2 (Address 0x77) |
| Control B Zone Target Register 3 maps directly to Zone 3 (Address 0x78) |
| Control B Zone Target Register 4 maps directly to Zone 4 (Address 0x79) |
| |
| Control C Zone Target Register 0 maps directly to Zone 0 (Address 0x7A) |
| Control C Zone Target Register 1 maps directly to Zone 1 (Address 0x7B) |
| Control C Zone Target Register 2 maps directly to Zone 2 (Address 0x7C) |
| Control C Zone Target Register 3 maps directly to Zone 3 (Address 0x7D) |
| Control C Zone Target Register 4 maps directly to Zone 4 (Address 0x7E) |

In $I^2C$ Current Control, any of the 5 Zone Target Registers for the particular Control Bank can be the LED brightness registers. This is set according to Control A, B, or C Brightness Configuration Registers (Bits [4:2]).

# 8 Application and Implementation

**NOTE**

Information in the following applications sections is not part of the TI component specification, and TI does not warrant its accuracy or completeness. TI's customers are responsible for determining suitability of components for their purposes. Customers should validate and test their design implementation to confirm system functionality.

## 8.1 Application Information

The LM3532 incorporates a 40-V (maximum output) boost, three high-voltage, low-side current sinks, and programmable dual ambient light sensor inputs with internal-sensor gain selection. The device can drive up to 3 parallel high-voltage LED strings with up to 90% efficiency. The adaptive current regulation method allows for different LED currents in each current sink, thus allowing for a wide variety of backlight-with-keypad applications.

## 8.2 Typical Application

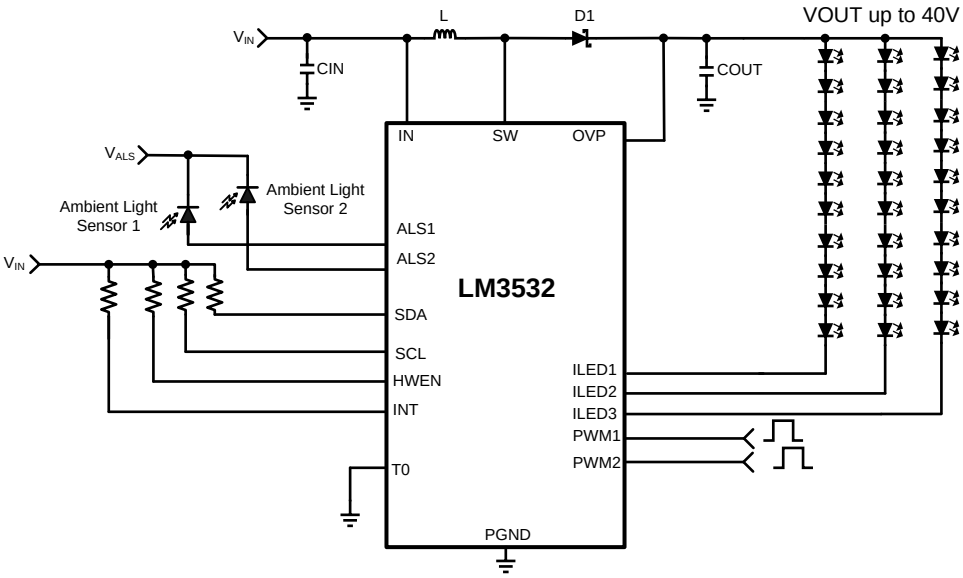


**Figure 23. LM3532 Typical Application**

### 8.2.1 Design Requirements

For typical white LED applications, use the parameters listed in Table 20:

**Table 20. Design Parameters**

| DESIGN PARAMETER | EXAMPLE VALUE |
|---|---|
| Input voltage range | 2.7 V to 5.5 V |
| Output current | 500 MHz typical |
| Boost switching frequency | 2 MHz |


Copyright © 2011–2015, Texas Instruments Incorporated

### 8.2.2 Detailed Design Procedure

**Table 21. Suggested Application Circuit Component List**

| COMPONENT | MANUFACTURER'S PART NUMBER | VALUE | SIZE | CURRENT/VOLTAGE RATING (RESISTANCE) |
|---|---|---|---|---|
| L | COILCRAFT LPS4018-103ML | 10 µH | 3.9 mm x 3.9 mm x 1.7 mm | 1 A ($R_{DC}$ = 0.2 Ω) |
| COUT | Murata GRM21BR71H105KA12L | 1 µF | 0805 | 50 V |
| CIN | Murata GRM188R71A225KE15D | 2.2 µF | 0603 | 10 V |

#### *8.2.2.1 Inductor Selection*

The LM3532 is designed to work with a 10-µH to 22-µH inductor. When selecting the inductor, ensure that the saturation rating is high enough to accommodate the applications peak inductor current . The inductance value must also be large enough so that the peak inductor current is kept below the LM3532's switch current limit. See *Maximum Output Power* for more details. Table 22 lists various inductors that can be used with the LM3532. The inductors with higher saturation currents are more suitable for applications with higher output currents or voltages (multiple strings). The smaller devices are geared toward single string applications with lower series LED counts.

**Table 22. Suggested Inductors**

| MANUFACTURER | PART NUMBER | VALUE | SIZE | CURRENT RATING | DC RESISTANCE |
|---|---|---|---|---|---|
| TDK | VLS252010T-100M | 10 µH | 2.5 mm × 2 mm × 1 mm | 590 mA | 0.712 Ω |
| TDK | VLS2012ET-100M | 10 µH | 2 mm × 2 mm × 1.2 mm | 695 mA | 0.47 Ω |
| TDK | VLF301512MT-100M | 10 µH | 3.0 mm × 2.5 mm × 1.2mm | 690 mA | 0.25 Ω |
| TDK | VLF4010ST-100MR80 | 10 µH | 2.8 mm × 3 mm × 1 mm | 800 mA | 0.25 Ω |
| TDK | VLS252012T-100M | 10 µH | 2.5 mm × 2 mm × 1.2mm | 810 mA | 0.63 Ω |
| TDK | VLF3014ST-100MR82 | 10 µH | 2.8 mm × 3 mm × 1.4mm | 820 mA | 0.25 Ω |
| TDK | VLF4014ST-100M1R0 | 10 µH | 3.8 mm × 3.6 mm × 1.4 mm | 1000 mA | 0.22 Ω |
| Coilcraft | XPL2010-103ML | 10 µH | 1.9 mm × 2 mm × 1 mm | 610 mA | 0.56 Ω |
| Coilcraft | LPS3010-103ML | 10 µH | 2.95 mm × 2.95 mm × 0.9 mm | 550 mA | 0.54 Ω |
| Coilcraft | LPS4012-103ML | 10 µH | 3.9mm × 3.9mm × 1.1mm | 1000 mA | 0.35 Ω |
| Coilcraft | LPS4012-223ML | 22 µH | 3.9 mm × 3.9 mm × 1.1 mm | 780 mA | 0.6 Ω |
| Coilcraft | LPS4018-103ML | 10 µH | 3.9 mm × 3.9 mm × 1.7 mm | 1100 mA | 0.2 Ω |
| Coilcraft | LPS4018-223ML | 22 µH | 3.9 mm × 3.9 mm × 1.7 mm | 700 mA | 0.36 Ω |

Copyright © 2011–2015, Texas Instruments Incorporated

#### 8.2.2.2 Capacitor Selection

The LM3532's output capacitor has two functions: filtering of the boost converter's switching ripple, and to ensure feedback loop stability. As a filter, the output capacitor supplies the LED current during the boost converter's on time and absorbs the inductor's energy during the switch's off time. This causes a sag in the output voltage during the on time and a rise in the output voltage during the off time. Because of this, the output capacitor must be sized large enough to filter the inductor current ripple that could cause the output voltage ripple to become excessive. As a feedback loop component, the output capacitor must be at least 1µF and have low ESR; otherwise, the LM3532's boost converter can become unstable. This requires the use of ceramic output capacitors. Table 23 lists part numbers and voltage ratings for different output capacitors that can be used with the LM3532.

**Table 23. Input/Output Capacitors**

| MANUFACTURER | PART NUMBER | VALUE | SIZE | RATING | DESCRIPTION |
|---|---|---|---|---|---|
| Murata | GRM21BR71H105KA12 | 1 µF | 0805 | 50 V | $C_{OUT}$ |
| Murata | GRM188B31A225KE33 | 2.2 µF | 0805 | 10 V | $C_{IN}$ |
| TDK | C1608X5R0J225 | 2.2 µF | 0603 | 6.3 V | $C_{IN}$ |

#### 8.2.2.3 Diode Selection

The diode connected between the SW and OUT pins must be a Schottky diode and have a reverse breakdown voltage high enough to handle the maximum output voltage in the application. Table 24 lists various diodes that can be used with the LM3532.

**Table 24. Diodes**

| MANUFACTURER | PART NUMBER | VALUE | SIZE | RATING |
|---|---|---|---|---|
| Diodes Inc. | B0540WS | Schottky | SOD-323 | 40/500 V/mA |
| Diodes Inc. | SDM20U40 | Schottky | SOD-523 (1.2 mm × 0.8 mm × 0.6 mm) | 40/200 V/mA |
| On Semiconductor | NSR0340V2T1G | Schottky | SOD-523 (1.2 mm × 0.8 mm × 0.6 mm) | 40/250 V/mA |
| On Semiconductor | NSR0240V2T1G | Schottky | SOD-523 (1.2 mm × 0.8 mm × 0.6 mm) | 40/250 V/mA |

#### 8.2.2.4 Maximum Output Power

The LM3532 device's maximum output power is governed by two factors: the peak current limit ($I_{CL}$ = 880 mA minimum), and the maximum output voltage ($V_{OVP}$ = 40 V minimum). When the application causes either of these limits to be reached it is possible that the proper current regulation and matching between LED current strings may not be met.

##### 8.2.2.4.1 Peak Current Limited

In the case of a peak current limited situation, when the peak of the inductor current hits the LM3532's current limit the NFET switch turns off for the remainder of the switching period. If this happens, each switching cycle the LM3532 begins to regulate the peak of the inductor current instead of the headroom across the current sinks. This can result in the dropout of the feedback-enabled current sinks and the current dropping below its programmed level.

The peak current in a boost converter is dependent on the value of the inductor, total LED current ($I_{OUT}$), the output voltage ($V_{OUT}$) (which is the highest voltage LED string + 0.4 V regulated headroom voltage), the input voltage $V_{IN}$, and the efficiency (output power/input power). Additionally, the peak current is different depending on whether the inductor current is continuous during the entire switching period (CCM) or discontinuous (DCM) where it goes to 0 before the switching period ends.

For CCM the peak inductor current is given by:

$$IPEAK = \frac{IOUT \times VOUT}{VIN \times efficiency} + \left[\frac{VIN}{2 \times fsw \times L} \times \left(1 - \frac{VIN \times efficiency}{VOUT}\right)\right] \quad (5)$$


Copyright © 2011–2015, Texas Instruments Incorporated

For DCM the peak inductor current is given by:

$$IPEAK = \sqrt{\frac{2 \times IOUT}{fsw \times L \times efficiency} \times \left(VOUT - VIN \times efficiency\right)} \tag{6}$$

To determine which mode the circuit is operating in (CCM or DCM) it is necessary to perform a calculation to test whether the inductor current ripple is less than the anticipated input current ($I_{IN}$). If $\Delta I_L$ is < then $I_{IN}$ then the device is operating in CCM. If $\Delta I_L$ is > $I_{IN}$ then the device is operating in DCM.

$$\frac{IOUT \times VOUT}{VIN \times efficiency} > \frac{VIN}{fsw \times L} \times \left(1 - \frac{VIN \times efficiency}{VOUT}\right) \tag{7}$$

Typically at currents high enough to reach the LM3532's peak current limit, the device is operating in CCM.

Figure 24, Figure 25, Figure 26, and Figure 27 show the output current and voltage derating for a 10-µH and a 22-µH inductor. These plots take Equation 5 and Equation 6 from above and plot $V_{OUT}$ and $I_{OUT}$ with varying $V_{IN}$, a constant peak current of 880 mA ($I_{CL}$ min), and a constant efficiency of 85%. Using these curves can give a good design guideline on selecting the correct inductor for a given output power requirement. A 10 µH is typically a smaller device with lower on resistance, but the peak currents are higher. A 22-µH inductor provides for lower peak currents, but to match the DC resistance of a 10-µH inductor requires a larger-sized device.

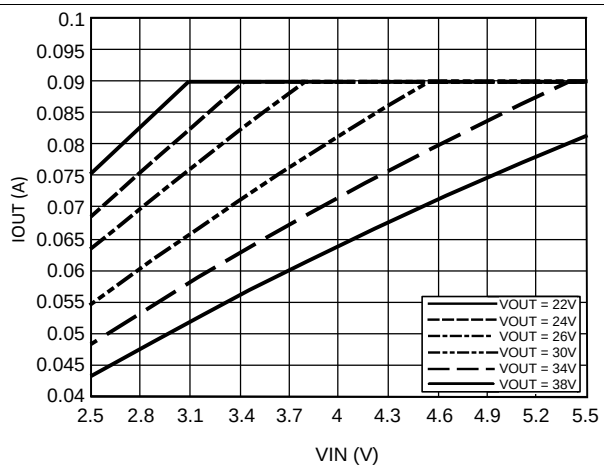


**Figure 24. Maximum Output Power (22 µH)**

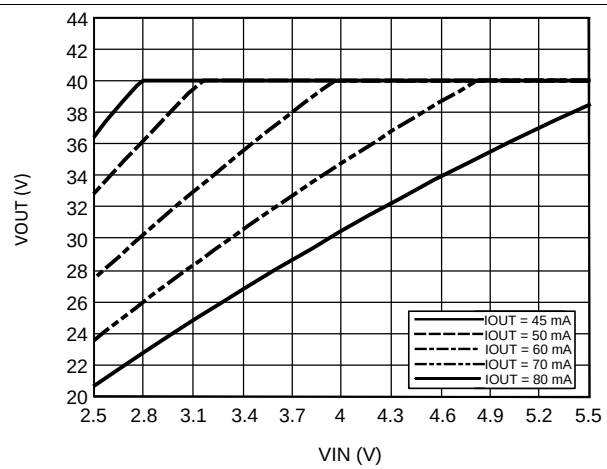


**Figure 25. Maximum Output Power (22 µH)**

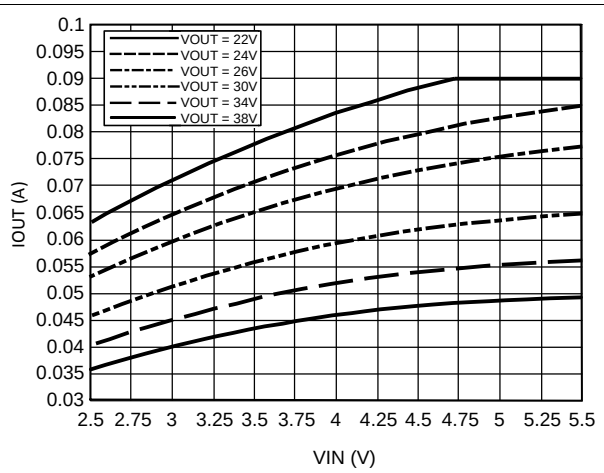


**Figure 26. Maximum Output Power (10 µH)**

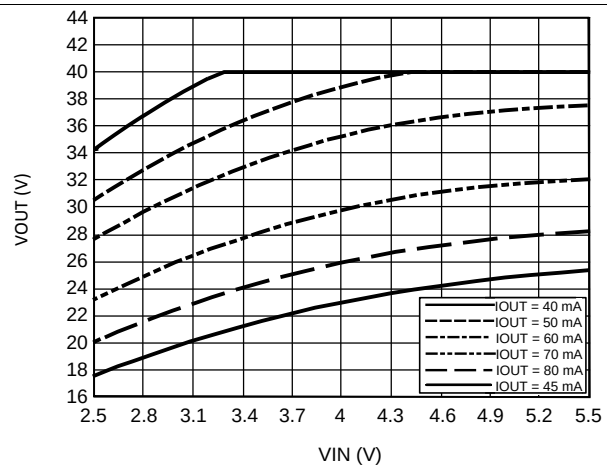


**Figure 27. Maximum Output Power (10 µH)**

#### 8.2.2.4.2 Output Voltage Limited

When the LM3532 output voltage (highest voltage LED string + 400-mV headroom voltage) reaches 40 V, the OVP threshold is hit, and the NFET turns off and remains off until the output voltage drops 1V below the OVP threshold. Once $V_{OUT}$ falls below this hysteresis, the boost converter turns on again. In high output voltage situations the LM3532 begins to regulate the output voltage to the $V_{OVP}$ level instead of the current sink headroom voltage. This can result in a loss of headroom voltage across the feedback enabled current sinks resulting in the LED current dropping below its programmed level.


Copyright © 2011–2015, Texas Instruments Incorporated

### 8.2.3 Application Curves

$V_{IN}$ = 3.6 V, LEDs ($V_F$ = 3.2 V at 20 mA, $T_A$ = 25°C), $C_{OUT}$ = 1 µF, $C_{IN}$ = 2.2 µF, L = Coilcraft LPS4018-103ML (10 µH ) or LPS4018-223M (22 µH), $T_A$ = 25°C unless otherwise specified.

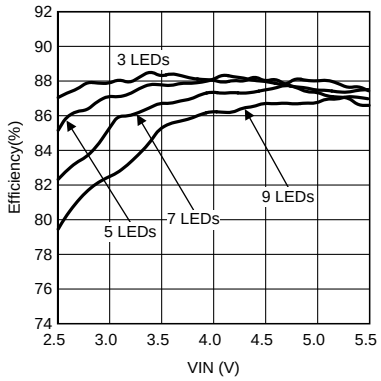


$I_{LED}$ = 20.2 mA L = 10 µH

**Figure 28. Efficiency vs $V_{IN}$ Single String,**

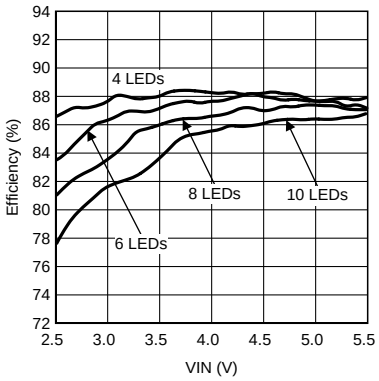


$I_{LED}$ = 20.2 mA L = 10 µH

**Figure 29. Efficiency vs $V_{IN}$ Single String**

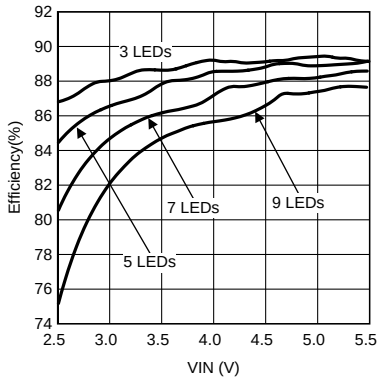


$I_{LED}$ = 20.2 mA L = 10 µH

**Figure 30. Efficiency vs $V_{IN}$ Dual String**

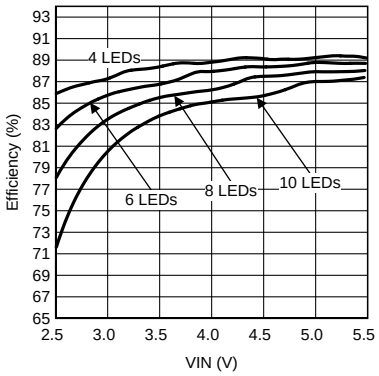


$I_{LED}$ = 20.2 mA L = 10 µH

**Figure 31. Efficiency vs $V_{IN}$ Dual String**

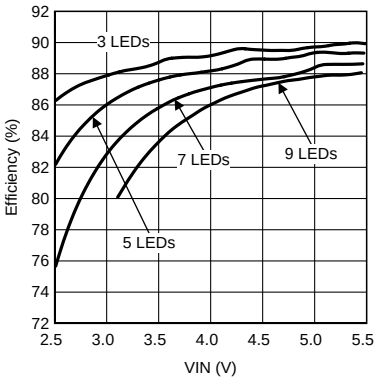


$I_{LED}$ = 20.2 mA L = 10 µH

**Figure 32. Efficiency vs $V_{IN}$ Triple String**

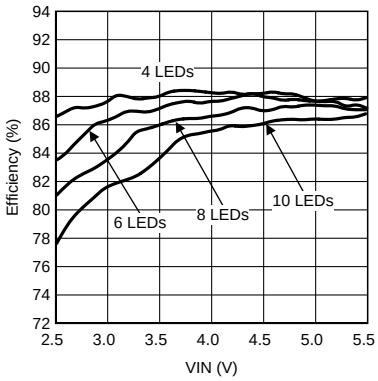


$I_{LED}$ = 20.2 mA L = 10 µH

**Figure 33. Efficiency vs $V_{IN}$ Triple String**

$V_{IN}$ = 3.6 V, LEDs ($V_F$ = 3.2 V at 20 mA, $T_A$ = 25°C), $C_{OUT}$ = 1 µF, $C_{IN}$ = 2.2 µF, L = Coilcraft LPS4018-103ML (10 µH ) or LPS4018-223M (22 µH), $T_A$ = 25°C unless otherwise specified.

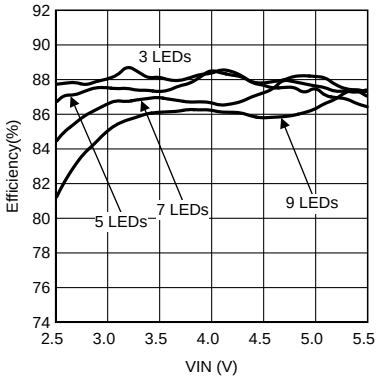


$I_{LED}$ = 20.2 mA L = 22 µH

**Figure 34. Efficiency vs $V_{IN}$ Single String**

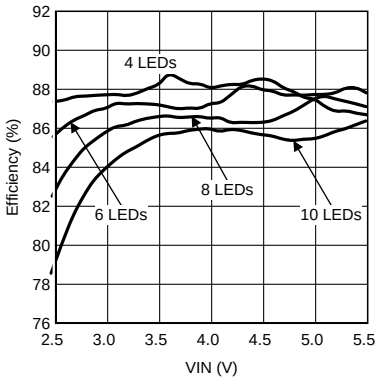


$I_{LED}$ = 20.2 mA L = 22 µH

**Figure 35. Efficiency vs $V_{IN}$ Single String**

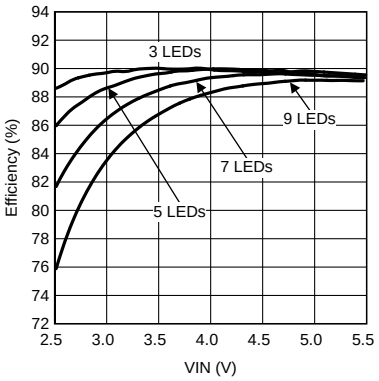


$I_{LED}$ = 20.2 mA L = 22 µH

**Figure 36. Efficiency vs $V_{IN}$ Dual String**

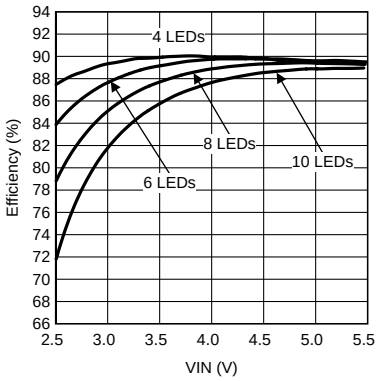


$I_{LED}$ = 20.2 mA L = 22 µH

**Figure 37. Efficiency vs $V_{IN}$ Dual String, Iled = 20.2ma Per String L = Lps4018-223ml (22µh)**

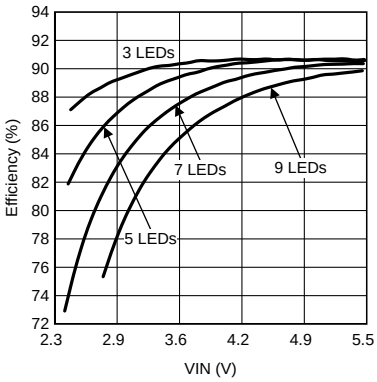


$I_{LED}$ = 20.2 mA L = 22 µH

**Figure 38. Efficiency vs $V_{IN}$ Triple String**

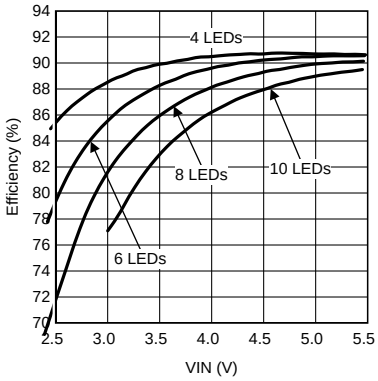


$I_{LED}$ = 20.2 mA L = 22 µH

**Figure 39. Efficiency vs $V_{IN}$ Triple String**


Copyright © 2011–2015, Texas Instruments Incorporated

$V_{IN}$ = 3.6 V, LEDs ($V_F$ = 3.2 V at 20 mA, $T_A$ = 25°C), $C_{OUT}$ = 1 µF, $C_{IN}$ = 2.2 µF, L = Coilcraft LPS4018-103ML (10 µH ) or LPS4018-223M (22 µH), $T_A$ = 25°C unless otherwise specified.

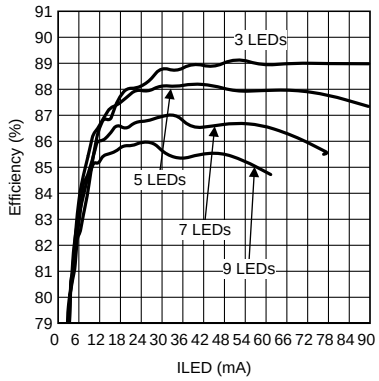


$V_{IN}$ = 3.6 V L = 10 µH

**Figure 40. Efficiency vs $I_{LED}$ Triple String**

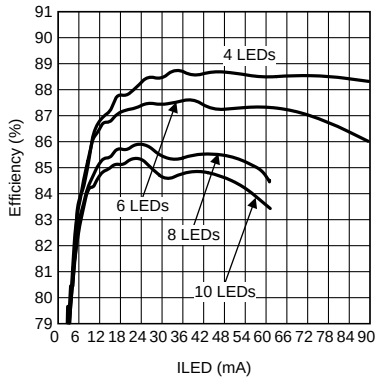


$V_{IN}$ = 3.6 V L = 10 µH

**Figure 41. Efficiency vs $I_{LED}$ Triple String**

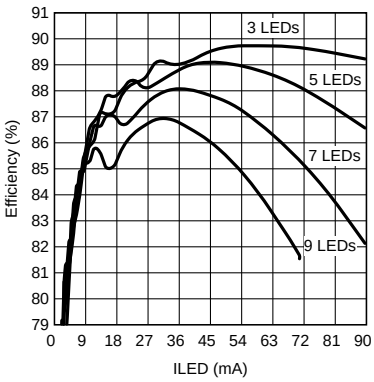


$V_{IN}$ = 3.6 V L = 22 µH

**Figure 42. Efficiency vs $I_{LED}$ Triple String**

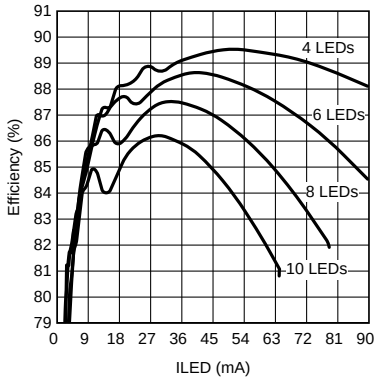


$V_{IN}$ = 3.6 V L = 22 µH

**Figure 43. Efficiency vs $I_{LED}$ Triple String**

## 9 Power Supply Recommendations

The LM3532 is designed to operate from an input supply range of 2.7 V to 5.5 V. This input supply should be well regulated and provide the peak current required by the LED configuration and inductor selected.

# 10 Layout

## 10.1 Layout Guidelines

The LM3532 contains an inductive boost converter which sees a high switched voltage (up to 40 V) at the SW pin, and a step current (up to 1 A) through the Schottky diode and output capacitor each switching cycle. The high switching voltage can create interference into nearby nodes due to electric field coupling (I = CdV/dt). The large step current through the diode, and the output capacitor can cause a large voltage spike at the SW pin and the OVP pin due to parasitic inductance in the step current conducting path (V = LdI/dt). Board layout guidelines are geared towards minimizing this electric field coupling and conducted noise. Figure 44 highlights these two noise generating components.

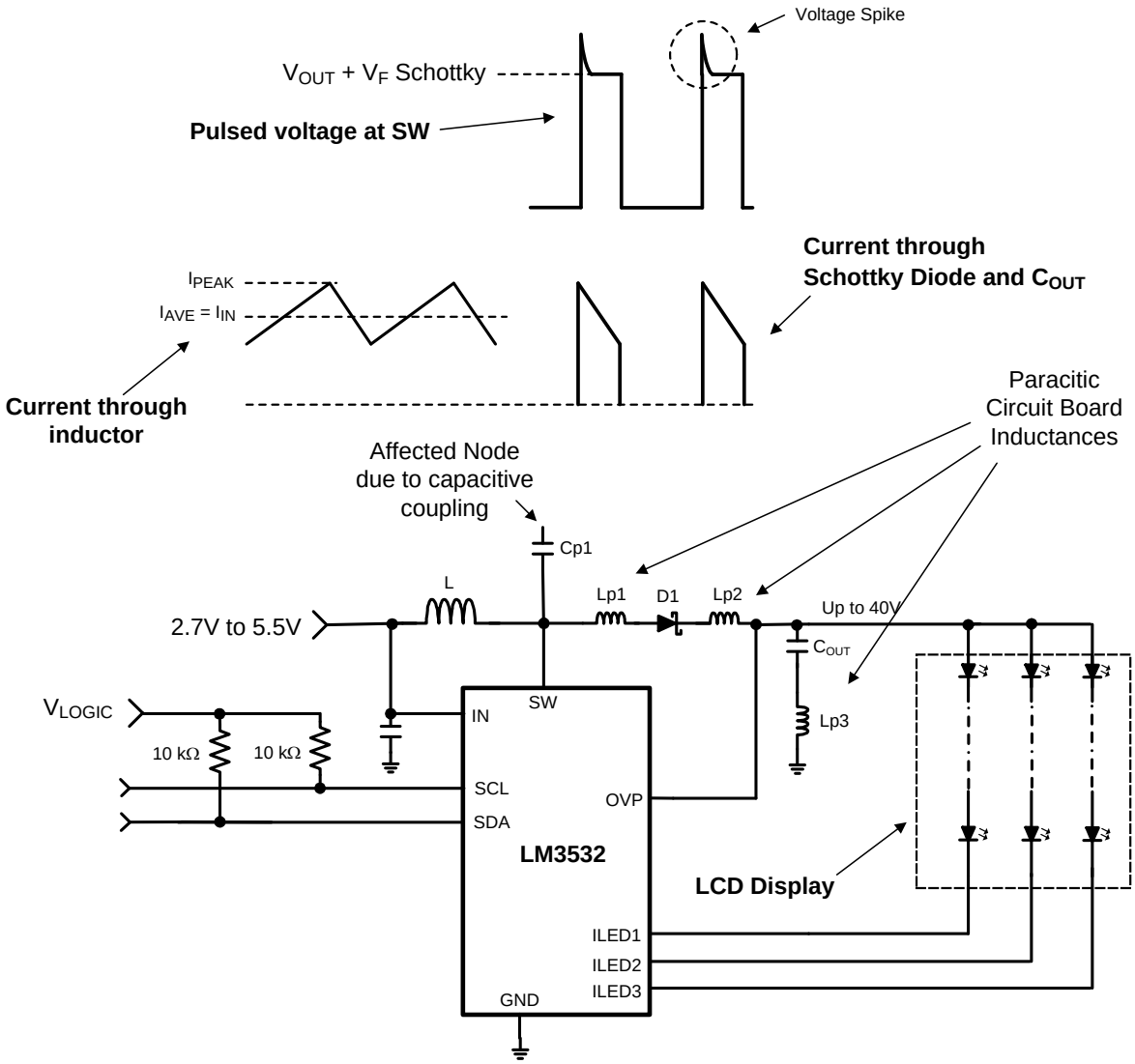


**Figure 44. LM3532'S Boost Converter Showing Pulsed Voltage at SW (High Dv/Dt) and Current Through Schottky and $C_{OUT}$ (High Di/Dt)**


Copyright © 2011–2015, Texas Instruments Incorporated

## Layout Guidelines (continued)

The following lists the main (layout sensitive) areas of the LM3532 in order of decreasing importance:

**Output Capacitor**

- Schottky Cathode to COUT+
- COUT− to GND

**Schottky Diode**

- SW Pin to Schottky Anode
- Schottky Cathode to COUT+

**Inductor**

- SW Node PCB capacitance to other traces

**Input Capacitor**

- CIN+ to IN pin
- CIN− to GND

### 10.1.1 Output Capacitor Placement

The output capacitor is in the path of the inductor current discharge current. As a result, $C_{OUT}$ sees a high current step from 0 to $I_{PEAK}$ each time the switch turns off and the Schottky diode turns on. Typical turnoff/turnon times are around 5 ns. Any inductance along this series path from the cathode of the diode through $C_{OUT}$ and back into the LM3532's GND pin contributes to voltage spikes ($V_{SPIKE} = L_{PX} \times dI/dt$) at SW and OUT which can potentially over-voltage the SW pin, or feed through to GND. To avoid this, $C_{OUT}$+ must be connected as close as possible to the Cathode of the Schottky diode and $C_{OUT}$− must be connected as close as possible to the LM3532's GND bump. The best placement for $C_{OUT}$ is on the same layer as the LM3532 to avoid any vias that add extra series inductance (see *Layout Examples*).

### 10.1.2 Schottky Diode Placement

The Schottky diode is in the path of the inductor current discharge. As a result the Schottky diode sees a high current step from 0 to $I_{PEAK}$ each time the switch turns off and the diode turns on. Any inductance in series with the diode causes a voltage spike ($V_{SPIKE} = L_{PX} \times dI/dt$) at SW and OUT which can potentially over-voltage the SW pin, or feed through to VOUT and through the output capacitor and into GND. Connecting the anode of the diode as close as possible to the SW pin and the cathode of the diode as close as possible to COUT+ reduces the inductance ($L_{PX}$) and minimize these voltage spikes (see *Layout Examples*).

### 10.1.3 Inductor Placement

The node where the inductor connects to the LM3532's SW bump has 2 issues. First, a large switched voltage (0 to $V_{OUT} + V_{F_SCHOTTKY}$) appears on this node every switching cycle. This switched voltage can be capacitively coupled into nearby nodes. Second, there is a relatively large current (input current) on the traces connecting the input supply to the inductor and connecting the inductor to the SW bump. Any resistance in this path can cause large voltage drops that negatively affect efficiency.

To reduce the capacitively coupled signal from SW into nearby traces, the SW bump to inductor connection must be minimized in area. This limits the PCB capacitance from SW to other traces. Additionally, other nodes need to be routed away from SW and not directly beneath. This is especially true for high impedance nodes that are more susceptible to capacitive coupling such as (SCL, SDA, HWEN, PWM, and possibly ASL1 and ALS2). A GND plane placed directly below SW helps isolate SW and dramatically reduce the capacitance from SW into nearby traces.

To limit the trace resistance of the VBATT to inductor connection and from the inductor to SW connection, use short, wide traces (see *Layout Examples*).

Copyright © 2011–2015, Texas Instruments Incorporated

## Layout Guidelines (continued)

### 10.1.4 Input Capacitor Selection and Placement

The input bypass capacitor filters the inductor current ripple, and the internal MOSFET driver currents during turn on of the power switch.

The driver current requirement can be a few hundred milliamps with 5 ns rise and fall times. This appears as high dI/dt current pulses coming from the input capacitor each time the switch turns on. Close placement of the input capacitor to the IN pin and to the GND pin is critical because any series inductance between IN and $C_{IN}$+ or $C_{IN}$− and GND can create voltage spikes that could appear on the $V_{IN}$ supply line and in the GND plane.

Close placement of the input bypass capacitor at the input side of the inductor is also critical. The source impedance (inductance and resistance) from the input supply, along with the input capacitor of the LM3532, form a series RLC circuit. If the output resistance from the source ($R_S$) is low enough the circuit is underdamped and has a resonant frequency (typically the case). Depending on the size of $L_S$ the resonant frequency could occur below, close to, or above the LM3532's switching frequency. This can cause the supply current ripple to be:

- Approximately equal to the inductor current ripple when the resonant frequency occurs well above the LM3532's switching frequency;
- Greater then the inductor current ripple when the resonant frequency occurs near the switching frequency; or
- Less then the inductor current ripple when the resonant frequency occurs well below the switching frequency.

Figure 45 shows this series RLC circuit formed from the output impedance of the supply and the input capacitor. The circuit is re-drawn for the AC case where the $V_{IN}$ supply is replaced with a short to GND and the LM3532 + Inductor is replaced with a current source ($\Delta I_L$).

Equation 1 is the criteria for an underdamped response. Equation 2 is the resonant frequency. Equation 3 is the approximated supply current ripple as a function of $L_S$, $R_S$, and $C_{IN}$.

As an example, consider a 3.6-V supply with 0.1 Ω of series resistance connected to $C_{IN}$ through 50 nH of connecting traces. This results in an underdamped input filter circuit with a resonant frequency of 712 kHz. Because the switching frequency lies near to the resonant frequency of the input RLC network, the supply current is probably larger then the inductor current ripple. In this case, using equation 3 from Figure 45, the supply current ripple can be approximated as 1.68 times the inductor current ripple. Increasing the series inductance ($L_S$) to 500 nH causes the resonant frequency to move to around 225 kHz and the supply current ripple to be approximately 0.25 times the inductor current ripple.


Copyright © 2011–2015, Texas Instruments Incorporated

## Layout Guidelines (continued)

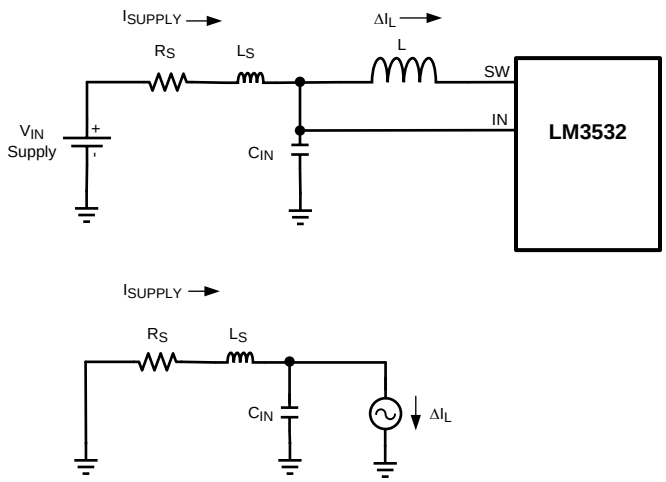


1. $$\frac{1}{L_S \times C_{IN}} > \frac{R_S^2}{4 \times L_S^2}$$

2. $$f_{RESONANT} = \frac{1}{2\pi\sqrt{L_S \times C_{IN}}}$$

3. $$I_{SUPPLYRIPPLE} \approx \Delta I_L \times \frac{\frac{1}{2\pi \times 500\ kHz \times C_{IN}}}{\sqrt{R_S^2 + \left(2\pi \times 500\ kHz \times L_S - \frac{1}{2\pi \times 500\ kHz \times C_{IN}}\right)^2}}$$

**Figure 45. Input RLC Network**

## 10.2 Layout Examples

Figure 46 and Figure 47 show example layouts which apply the required (proper) layout guidelines. These figures should be used as guides for laying out the LM3532's boost circuit.

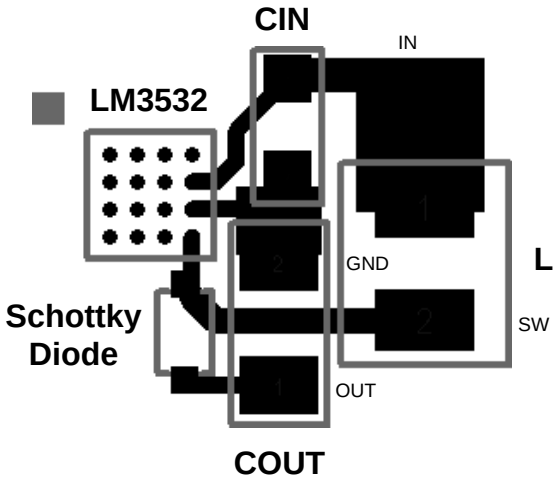


**Figure 46. Layout Example 1**

## Layout Examples (continued)

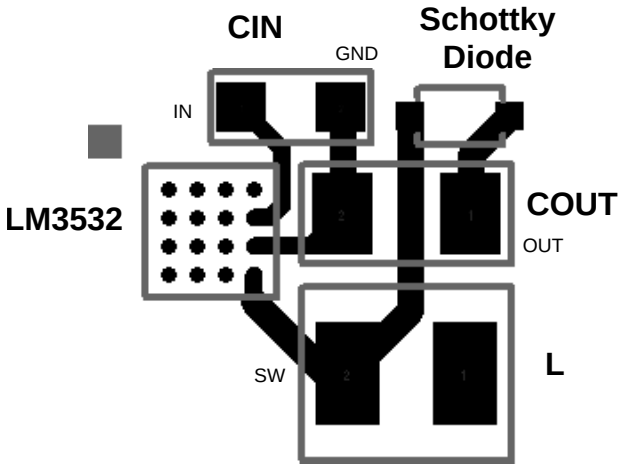


**Figure 47. Layout Example 2**


Copyright © 2011–2015, Texas Instruments Incorporated

# 11 Device and Documentation Support

## 11.1 Device Support

### 11.1.1 Third-Party Products Disclaimer

TI'S PUBLICATION OF INFORMATION REGARDING THIRD-PARTY PRODUCTS OR SERVICES DOES NOT CONSTITUTE AN ENDORSEMENT REGARDING THE SUITABILITY OF SUCH PRODUCTS OR SERVICES OR A WARRANTY, REPRESENTATION OR ENDORSEMENT OF SUCH PRODUCTS OR SERVICES, EITHER ALONE OR IN COMBINATION WITH ANY TI PRODUCT OR SERVICE.

## 11.2 Documentation Support

### 11.2.1 Related Documentation

For related documentation see the following:

Application Note AN-1112: *DSBGA Wafer Level Chip Scale Package* (SNVA009).

## 11.3 Community Resources

The following links connect to TI community resources. Linked contents are provided "AS IS" by the respective contributors. They do not constitute TI specifications and do not necessarily reflect TI's views; see TI's Terms of Use.

**TI E2E™ Online Community** ***TI's Engineer-to-Engineer (E2E) Community.*** Created to foster collaboration among engineers. At e2e.ti.com, you can ask questions, share knowledge, explore ideas and help solve problems with fellow engineers.

**Design Support** ***TI's Design Support*** Quickly find helpful E2E forums along with design support tools and contact information for technical support.

## 11.4 Trademarks

E2E is a trademark of Texas Instruments.
All other trademarks are the property of their respective owners.

## 11.5 Electrostatic Discharge Caution

These devices have limited built-in ESD protection. The leads should be shorted together or the device placed in conductive foam during storage or handling to prevent electrostatic damage to the MOS gates.

## 11.6 Glossary

SLYZ022 — *TI Glossary*.

This glossary lists and explains terms, acronyms, and definitions.

# 12 Mechanical, Packaging, and Orderable Information

The following pages include mechanical, packaging, and orderable information. This information is the most current data available for the designated devices. This data is subject to change without notice and revision of this document. For browser-based versions of this data sheet, refer to the left-hand navigation.

## PACKAGING INFORMATION

| Orderable part number | Status (1) | Material type (2) | Package \| Pins | Package qty \| Carrier | RoHS (3) | Lead finish/ Ball material (4) | MSL rating/ Peak reflow (5) | Op temp (°C) | Part marking (6) |
|---|---|---|---|---|---|---|---|---|---|
| LM3532TME-40A/NOPB | Active | Production | DSBGA (YFQ) \| 16 | 250 \| SMALL T&R | Yes | SNAGCU | Level-1-260C-UNLIM | -40 to 125 | D34 |
| LM3532TME-40A/NOPB.A | Active | Production | DSBGA (YFQ) \| 16 | 250 \| SMALL T&R | Yes | SNAGCU | Level-1-260C-UNLIM | -40 to 125 | D34 |
| LM3532TMX-40A/NOPB | Active | Production | DSBGA (YFQ) \| 16 | 3000 \| LARGE T&R | Yes | SNAGCU | Level-1-260C-UNLIM | -40 to 125 | D34 |
| LM3532TMX-40A/NOPB.A | Active | Production | DSBGA (YFQ) \| 16 | 3000 \| LARGE T&R | Yes | SNAGCU | Level-1-260C-UNLIM | -40 to 125 | D34 |

(1) **Status:** For more details on status, see our product life cycle.

(2) **Material type:** When designated, preproduction parts are prototypes/experimental devices, and are not yet approved or released for full production. Testing and final process, including without limitation quality assurance, reliability performance testing, and/or process qualification, may not yet be complete, and this item is subject to further changes or possible discontinuation. If available for ordering, purchases will be subject to an additional waiver at checkout, and are intended for early internal evaluation purposes only. These items are sold without warranties of any kind.

(3) **RoHS values:** Yes, No, RoHS Exempt. See the TI RoHS Statement for additional information and value definition.

(4) **Lead finish/Ball material:** Parts may have multiple material finish options. Finish options are separated by a vertical ruled line. Lead finish/Ball material values may wrap to two lines if the finish value exceeds the maximum column width.

(5) **MSL rating/Peak reflow:** The moisture sensitivity level ratings and peak solder (reflow) temperatures. In the event that a part has multiple moisture sensitivity ratings, only the lowest level per JEDEC standards is shown. Refer to the shipping label for the actual reflow temperature that will be used to mount the part to the printed circuit board.

(6) **Part marking:** There may be an additional marking, which relates to the logo, the lot trace code information, or the environmental category of the part.

Multiple part markings will be inside parentheses. Only one part marking contained in parentheses and separated by a "~" will appear on a part. If a line is indented then it is a continuation of the previous line and the two combined represent the entire part marking for that device.

**Important Information and Disclaimer:**The information provided on this page represents TI's knowledge and belief as of the date that it is provided. TI bases its knowledge and belief on information provided by third parties, and makes no representation or warranty as to the accuracy of such information. Efforts are underway to better integrate information from third parties. TI has taken and continues to take reasonable steps to provide representative and accurate information but may not have conducted destructive testing or chemical analysis on incoming materials and chemicals. TI and TI suppliers consider certain information to be proprietary, and thus CAS numbers and other limited information may not be available for release.

In no event shall TI's liability arising out of such information exceed the total purchase price of the TI part(s) at issue in this document sold by TI to Customer on an annual basis.

## TAPE AND REEL INFORMATION

**REEL DIMENSIONS**

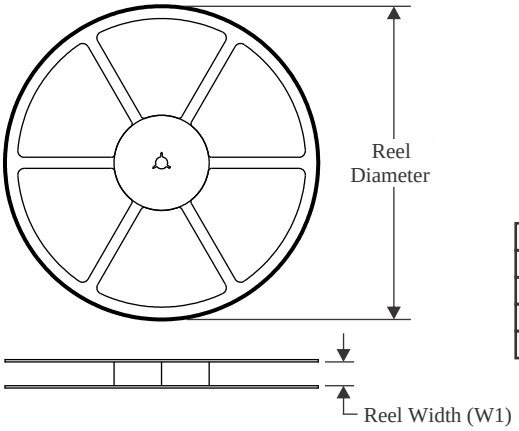


**TAPE DIMENSIONS**

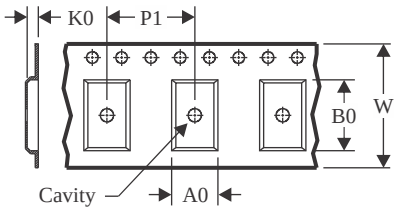


| | |
|---|---|
| A0 | Dimension designed to accommodate the component width |
| B0 | Dimension designed to accommodate the component length |
| K0 | Dimension designed to accommodate the component thickness |
| W | Overall width of the carrier tape |
| P1 | Pitch between successive cavity centers |

**QUADRANT ASSIGNMENTS FOR PIN 1 ORIENTATION IN TAPE**

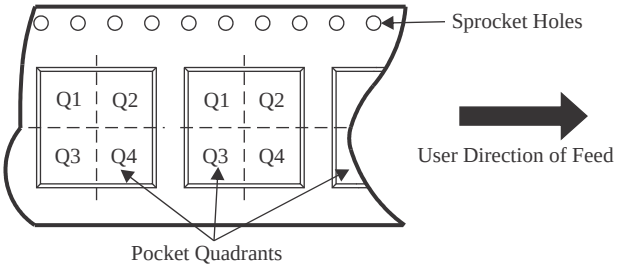


*All dimensions are nominal

| Device | Package Type | Package Drawing | Pins | SPQ | Reel Diameter (mm) | Reel Width W1 (mm) | A0 (mm) | B0 (mm) | K0 (mm) | P1 (mm) | W (mm) | Pin1 Quadrant |
|---|---|---|---|---|---|---|---|---|---|---|---|---|
| LM3532TME-40A/NOPB | DSBGA | YFQ | 16 | 250 | 178.0 | 8.4 | 1.85 | 2.01 | 0.76 | 4.0 | 8.0 | Q1 |
| LM3532TMX-40A/NOPB | DSBGA | YFQ | 16 | 3000 | 178.0 | 8.4 | 1.85 | 2.01 | 0.76 | 4.0 | 8.0 | Q1 |

TAPE AND REEL BOX DIMENSIONS

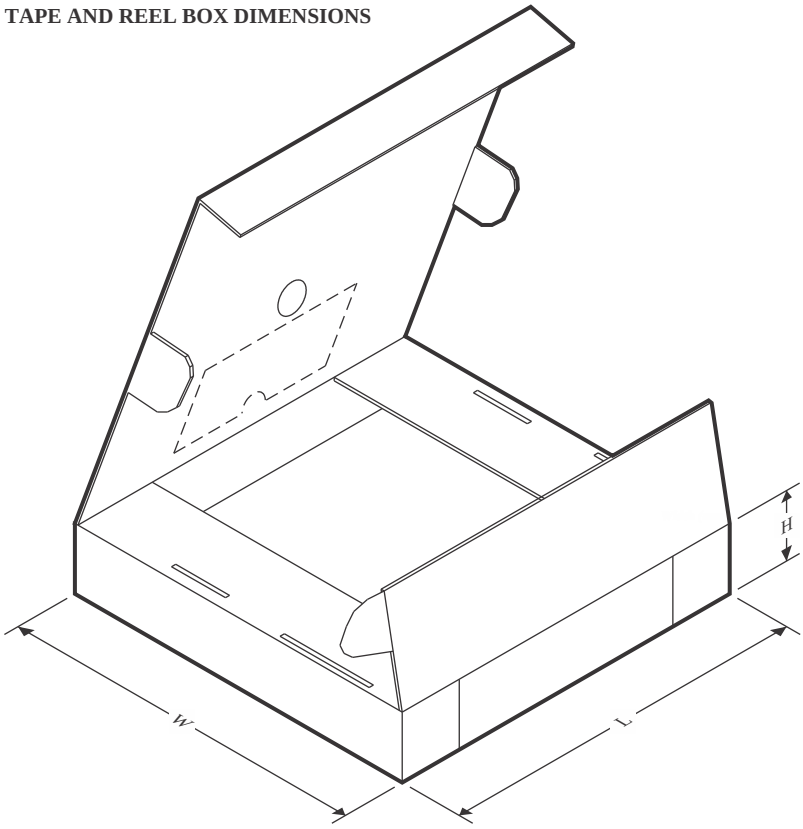


*All dimensions are nominal

| Device | Package Type | Package Drawing | Pins | SPQ | Length (mm) | Width (mm) | Height (mm) |
|---|---|---|---|---|---|---|---|
| LM3532TME-40A/NOPB | DSBGA | YFQ | 16 | 250 | 208.0 | 191.0 | 35.0 |
| LM3532TMX-40A/NOPB | DSBGA | YFQ | 16 | 3000 | 208.0 | 191.0 | 35.0 |

# YFQ0016

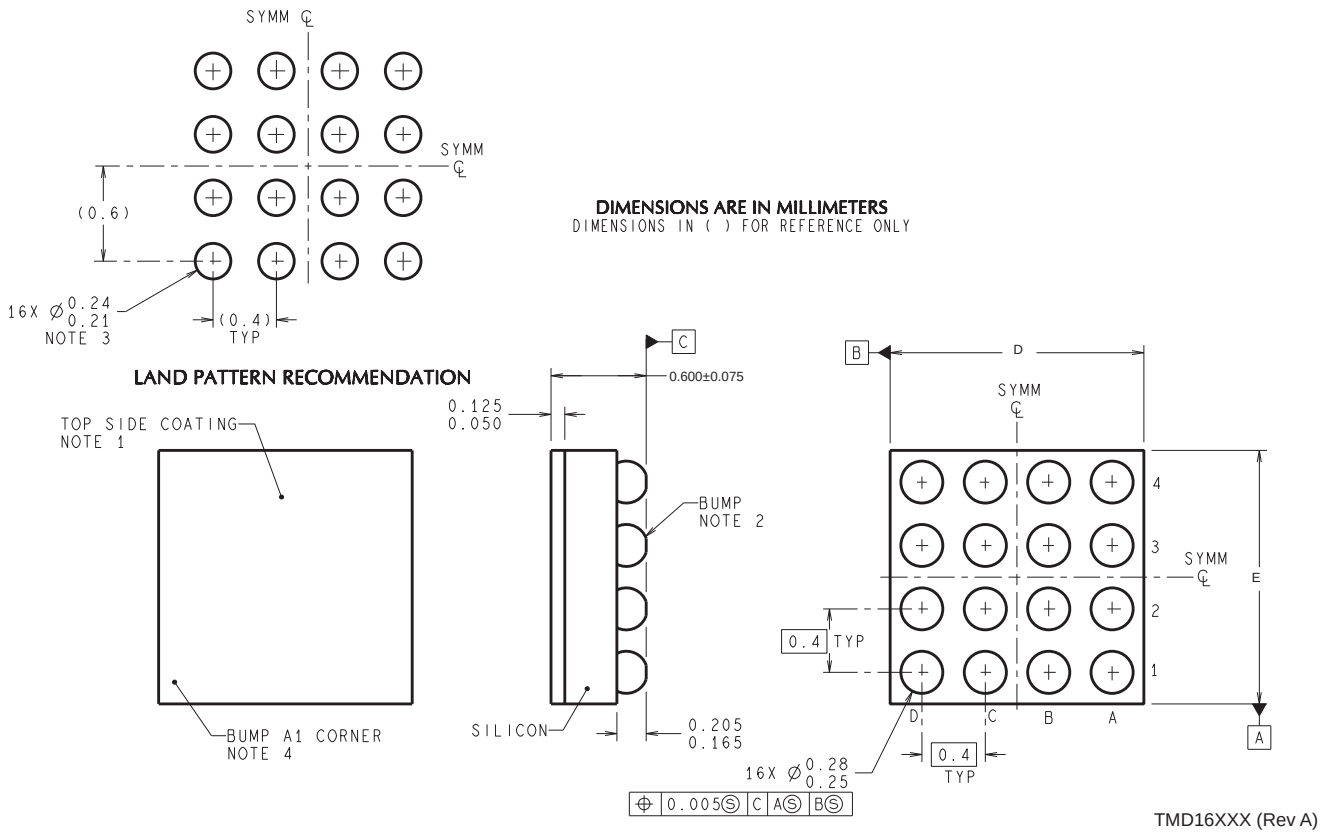


D: Max = 1.87 mm, Min = 1.81 mm

E: Max = 1.77 mm, Min = 1.71 mm

4215081/A 12/12

NOTES: A. All linear dimensions are in millimeters. Dimensioning and tolerancing per ASME Y14.5M-1994.
B. This drawing is subject to change without notice.

# IMPORTANT NOTICE AND DISCLAIMER

TI PROVIDES TECHNICAL AND RELIABILITY DATA (INCLUDING DATASHEETS), DESIGN RESOURCES (INCLUDING REFERENCE DESIGNS), APPLICATION OR OTHER DESIGN ADVICE, WEB TOOLS, SAFETY INFORMATION, AND OTHER RESOURCES “AS IS” AND WITH ALL FAULTS, AND DISCLAIMS ALL WARRANTIES, EXPRESS AND IMPLIED, INCLUDING WITHOUT LIMITATION ANY IMPLIED WARRANTIES OF MERCHANTABILITY, FITNESS FOR A PARTICULAR PURPOSE OR NON-INFRINGEMENT OF THIRD PARTY INTELLECTUAL PROPERTY RIGHTS.

These resources are intended for skilled developers designing with TI products. You are solely responsible for (1) selecting the appropriate TI products for your application, (2) designing, validating and testing your application, and (3) ensuring your application meets applicable standards, and any other safety, security, regulatory or other requirements.

These resources are subject to change without notice. TI grants you permission to use these resources only for development of an application that uses the TI products described in the resource. Other reproduction and display of these resources is prohibited. No license is granted to any other TI intellectual property right or to any third party intellectual property right. TI disclaims responsibility for, and you fully indemnify TI and its representatives against any claims, damages, costs, losses, and liabilities arising out of your use of these resources.

TI’s products are provided subject to TI’s Terms of Sale, TI’s General Quality Guidelines, or other applicable terms available either on ti.com or provided in conjunction with such TI products. TI’s provision of these resources does not expand or otherwise alter TI’s applicable warranties or warranty disclaimers for TI products. Unless TI explicitly designates a product as custom or customer-specified, TI products are standard, catalog, general purpose devices.

TI objects to and rejects any additional or different terms you may propose.

Copyright © 2025, Texas Instruments Incorporated

Last updated 10/2025