LF412-N-MIL 低偏移、低漂移双路 JFET 输入运算放大器

1 特性

- 内部修整偏移电压：1mV（最大值）
- 输入偏移电压漂移：7μV/°C（典型值）
- 低输入偏置电流：50pA
- 低输入噪声电流：0.01pA/$\sqrt{Hz}$
- 宽增益带宽：3MHz（最小值）
- 高转换率：10V/μs（最小值）
- 低电源电流：1.8mA/放大器
- 高输入阻抗：$10^{12}\Omega$
- 低总谐波失真：≤ 0.02%
- 低 1/f 噪声转角点：50Hz
- 0.01% 精度的快速趋稳时间：2μs

2 应用

- 高速集成器
- 高速 D/A 转换器
- 采样和保持电路

3 说明

这些器件是低成本、高速度的 JFET 输入运算放大器，具有极低的输入偏移电压和输入偏移电压漂移。它们需要低电源电流，但能够保持较大的增益带宽乘积和快速的转换速率。此外，匹配良好的高电压 JFET 输入器件可提供极低的输入偏置和偏移电流。LF412-N-MIL 双引脚与 LM1558 兼容，使设计人员能够立即升级现有设计的整体性能。

这些放大器可用于多种 应用， 如高速积分器、快速 D/A 转换器、采样和保持电路，以及许多其他需要低输入偏移电压和漂移、低输入偏置电流、高输入阻抗、高转换速率和宽带宽。

器件信息(1)

器件型号	封装	封装尺寸（标称值）
LF412-N-MIL	PDIP (8)	9.59mm × 6.35mm
	TO (8)	直径 9.14mm

(1) 如需了解所有可用封装，请参阅数据表末尾的可订购产品附录。

反向放大器

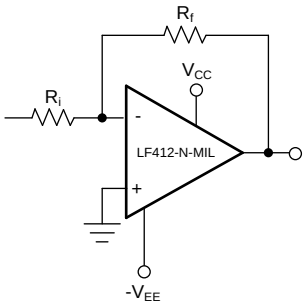

Copyright © 2017, Texas Instruments Incorporated

An IMPORTANT NOTICE at the end of this data sheet addresses availability, warranty, changes, use in safety-critical applications, intellectual property matters and other important disclaimers. PRODUCTION DATA.

目录

1 特性 ... 1
2 应用 ... 1
3 说明 ... 1
4 修订历史记录 ... 2
5 **Pin Configuration and Functions** ... 3
6 **Specifications** ... 4
6.1 Absolute Maximum Ratings ... 4
6.2 ESD Ratings ... 4
6.3 Recommended Operating Conditions ... 4
6.4 Thermal Information ... 4
6.5 DC Electrical Characteristics ... 5
6.6 AC Electrical Characteristics ... 6
6.7 Typical Characteristics ... 7
7 **Detailed Description** ... 12
7.1 Overview ... 12
7.2 Functional Block Diagram ... 12
7.3 Feature Description ... 12
7.4 Device Functional Modes ... 13
8 **Application and Implementation** ... 14
8.1 Application Information ... 14
8.2 Typical Application ... 14
9 **Power Supply Recommendations** ... 16
10 **Layout** ... 16
10.1 Layout Guidelines ... 16
10.2 Layout Example ... 16
11 器件和文档支持 ... 17
11.1 接收文档更新通知 ... 17
11.2 社区资源 ... 17
11.3 商标 ... 17
11.4 静电放电警告 ... 17
11.5 Glossary ... 17
12 机械、封装和可订购信息 ... 18

4 修订历史记录

注：之前版本的页码可能与当前版本有所不同。

日期	修订版本	注意
2017 年 6 月	*	初始发行版。

Copyright © 2017, Texas Instruments Incorporated

5 Pin Configuration and Functions

LMC Package
8-Pin TO
Top View

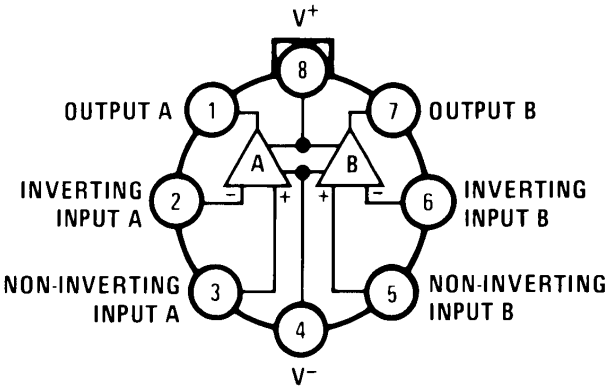

Note. Pin 4 connected to case.

P Package
8-Pin PDIP
Top View

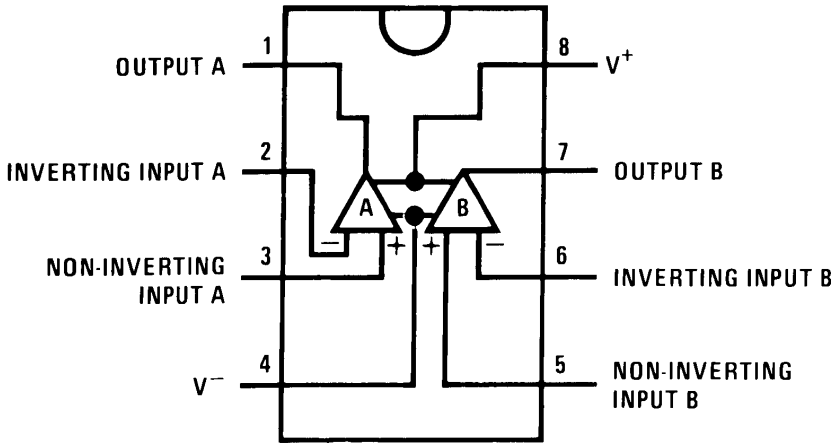

Pin Functions

PIN		I/O	DESCRIPTION
NAME	NO.		
Inverting input A	2	I	Amplifier A inverting input
Inverting input B	6	I	Amplifier B inverting input
Noninverting input A	3	I	Amplifier A noninverting input
Noninverting input B	5	I	Amplifier B noninverting input
Output A	1	O	Amplifier A output
Output B	7	O	Amplifier B output
V+	8	P	Positive supply
V-	4	P	Negative supply

Copyright © 2017, Texas Instruments Incorporated

6 Specifications

6.1 Absolute Maximum Ratings

over operating free-air temperature range (unless otherwise noted)[1]

	MIN	MAX	UNIT
Supply voltage	–18	18	V
Differential input voltage	–30	30	V
Input voltage range			
Output short circuit duration	Continuous		
Power dissipation	670		mW
T_J maximum		115	°C
Operating temperature range	See *Thermal Information*		
Storage temperature, T_{stg}	−65	150	°C

(1) Stresses beyond those listed under *Absolute Maximum Ratings* may cause permanent damage to the device. These are stress ratings only, which do not imply functional operation of the device at these or any other conditions beyond those indicated under *Recommended Operating Conditions*. Exposure to absolute-maximum-rated conditions for extended periods may affect device reliability.

6.2 ESD Ratings

		VALUE	UNIT
$V_{(ESD)}$ Electrostatic discharge	Human-body model (HBM), per ANSI/ESDA/JEDEC JS-001[1]	±1700	V
	Charged-device model (CDM), per JEDEC specification JESD22-C101[2]	±1700	

(1) JEDEC document JEP155 states that 500-V HBM allows safe manufacturing with a standard ESD control process. Manufacturing with less than 500-V HBM is possible with the necessary precautions. Pins listed as ±1700 V may actually have higher performance.
(2) JEDEC document JEP157 states that 250-V CDM allows safe manufacturing with a standard ESD control process. Manufacturing with less than 250-V CDM is possible with the necessary precautions. Pins listed as ±1700 V may actually have higher performance.

6.3 Recommended Operating Conditions

over operating free-air temperature range (unless otherwise noted)

	MIN	NOM	MAX	UNIT
Supply voltage			±15	V

6.4 Thermal Information

THERMAL METRIC[1]	LF412-N-MIL		UNIT
	LMC (TO)	P (PDIP)	
	8 PINS	8 PINS	
$R_{\theta JA}$ Junction-to-ambient thermal resistance (typical)	152	115	°C/W

(1) For more information about traditional and new thermal metrics, see the *Semiconductor and IC Package Thermal Metrics* application report.

Copyright © 2017, Texas Instruments Incorporated

6.5 DC Electrical Characteristics

over operating free-air temperature range (unless otherwise noted)

PARAMETER		TEST CONDITIONS		LF412-N-MIL (1)			UNIT
				MIN	TYP	MAX	
V_{OS}	Input offset voltage	R_S =10 kΩ, T_A = 25°C			1	3	mV
$\Delta V_{OS}/\Delta T$	Average TC of input offset voltage	R_S = 10 kΩ			7		μV/°C
I_{OS}	Input offset current	V_S = ±15 V (2)	T_J = 25°C		25	100	pA
			T_J = 70°C			2	nA
			T_J = 125°C			25	nA
I_B	Input bias current	V_S=±15V (2) (2)	T_J = 25°C		50	200	pA
			T_J = 70°C			4	nA
			T_J = 125°C			50	nA
R_{IN}	Input resistance	T_J = 25°C			10^{12}		Ω
A_{VOL}	Large signal voltage gain	R_L = 2 k, T_A = 25°C, V_S = ±15 V, V_O = ±10 V		25	200		V/mV
		Over temperature		15	200		
V_O	Output voltage swing	V_S = ±15 V, R_L = 10 k		±12	±13.5		V
V_{CM}	Input common-mode voltage range			±11	14.5		V
					−11.5		V
CMRR	Common-mode rejection ratio	R_S ≤ 10 k		70	100		dB
PSRR	Supply voltage rejection ratio			(3)70	100		dB
I_S	Supply current	V_O = 0 V, R_L = ∞			3.6	6.5	mA

(1) Unless otherwise specified, the specifications apply over the full temperature range and for V_S = ±15 V for the LF412-N-MIL. V_{OS}, I_B, and I_{OS} are measured at V_{CM} = 0.
(2) The input bias currents are junction leakage currents which approximately double for every 10°C increase in the junction temperature, T_J. Due to limited production test time, the input bias currents measured are correlated to junction temperature. In normal operation the junction temperature rises above the ambient temperature as a result of internal power dissipation, P_D. $T_J = T_A + \theta_{JA} P_D$ where θ_{JA} is the thermal resistance from junction to ambient. Use of a heat sink is recommended if input bias current is to be kept to a minimum.
(3) Supply voltage rejection ratio is measured for both supply magnitudes increasing or decreasing simultaneously in accordance with common practice. V_S = ±6 V to ±15 V.

Copyright © 2017, Texas Instruments Incorporated

6.6 AC Electrical Characteristics

over operating free-air temperature range (unless otherwise noted)

PARAMETER		TEST CONDITIONS	LF412-N-MIL (1)			UNIT
			MIN	TYP	MAX	
	Amplifier to amplifier coupling	T_A = 25°C f = 1 Hz – 20 kHz (Input referred)		−120		dB
SR	Slew rate	V_S = ±15 V T_A = 25°C	8	15		V/µs
GBW	Gain-bandwidth product	V_S = ±15 V T_A = 25°C	2.7	4		MHz
THD	Total harmonic dist	A_V = 10 R_L = 10 k V_O = 20 Vp-p BW = 20 Hz – 20 kHz		≤0.02%		
e_n	Equivalent input noise voltage	T_A = 25°C R_S = 100 Ω f = 1 kHz		25		nV / √Hz
i_n	Equivalent input noise current	T_A = 25°C, f = 1 kHz		0.01		pA / √Hz

(1) Unless otherwise specified, the specifications apply over the full temperature range and for V_S = ±15 V for the LF412-N-MIL. V_{OS}, I_B, and I_{OS} are measured at V_{CM} = 0.

版权 © 2017, Texas Instruments Incorporated

6.7 Typical Characteristics

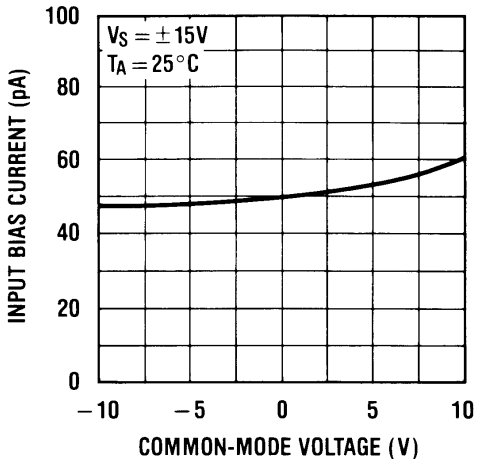

图 1. Input Bias Current

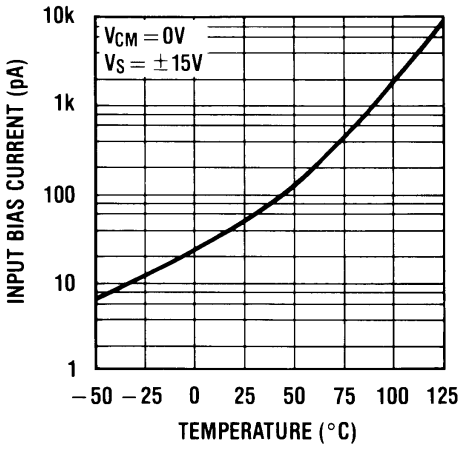

图 2. Input Bias Current

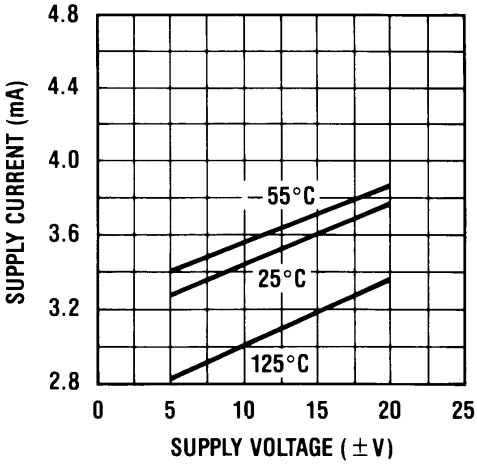

图 3. Supply Current

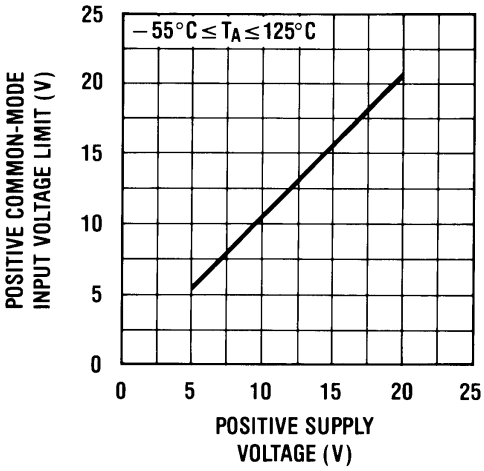

图 4. Positive Common-Mode Input Voltage Limit

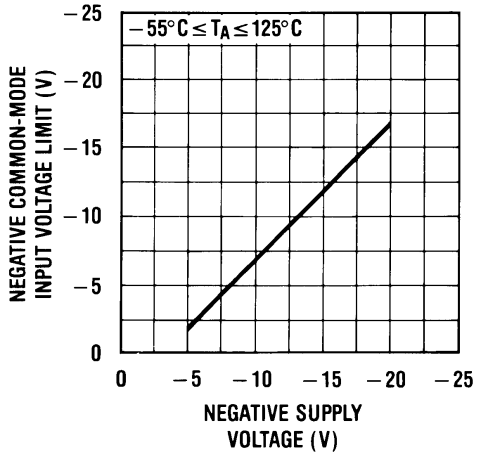

图 5. Negative Common-Mode Input Voltage Limit

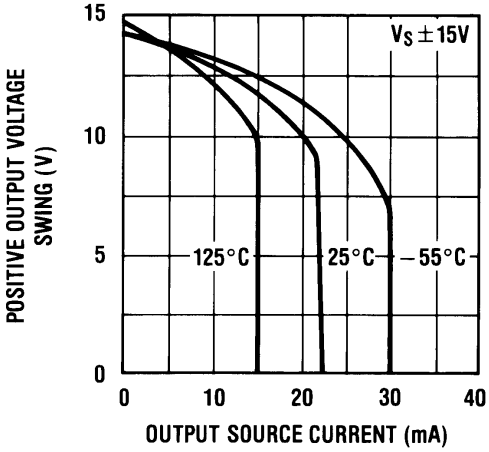

图 6. Positive Current Limit

Typical Characteristics (接下页)

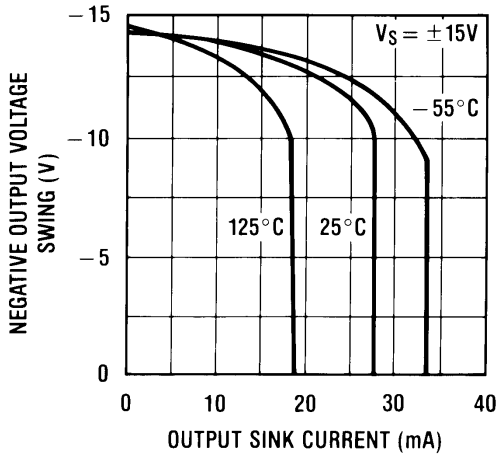

图 7. Negative Current Limit

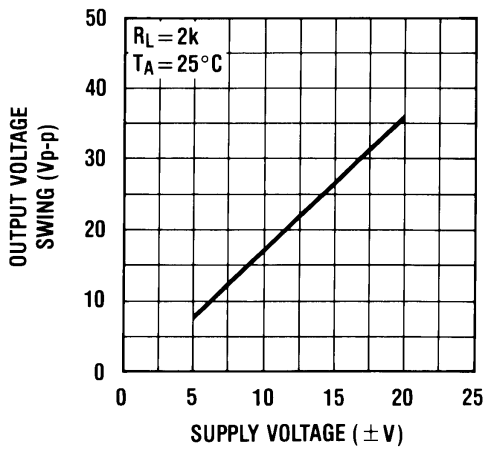

图 8. Output Voltage Swing

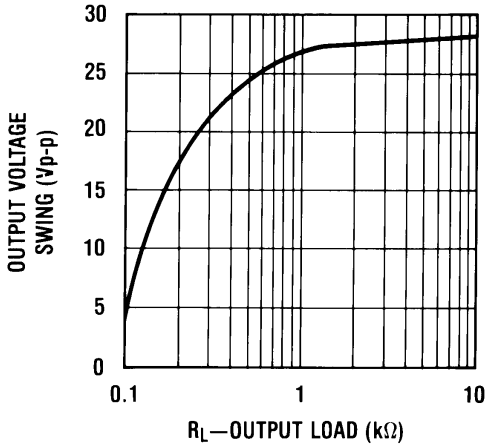

图 9. Output Voltage Swing

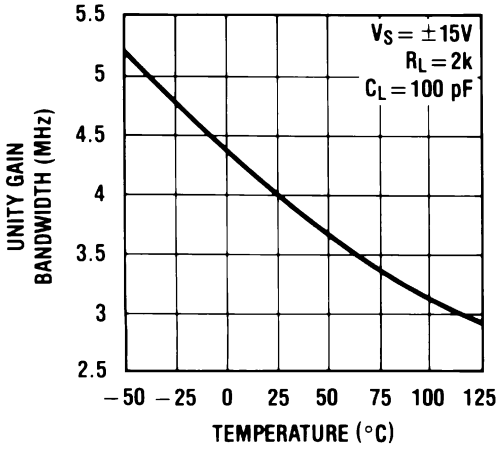

图 10. Gain Bandwidth

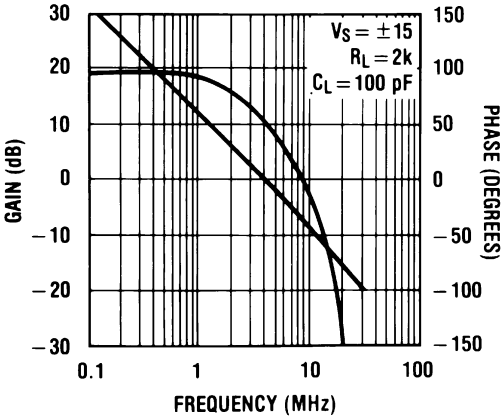

图 11. Bode Plot

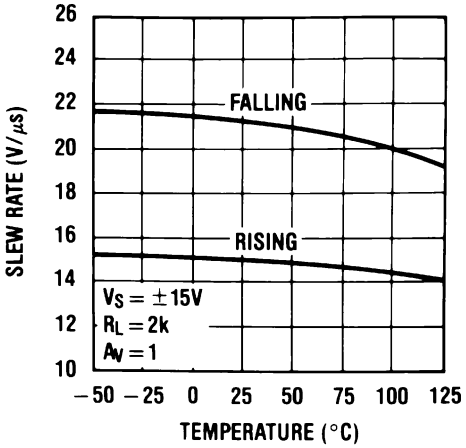

图 12. Slew Rate

版权 © 2017, Texas Instruments Incorporated

Typical Characteristics (接下页)

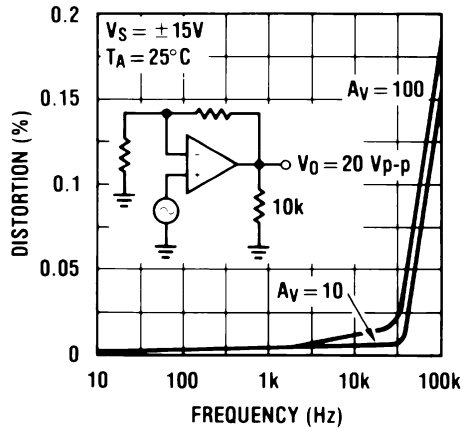

图 13. Distortion vs Frequency

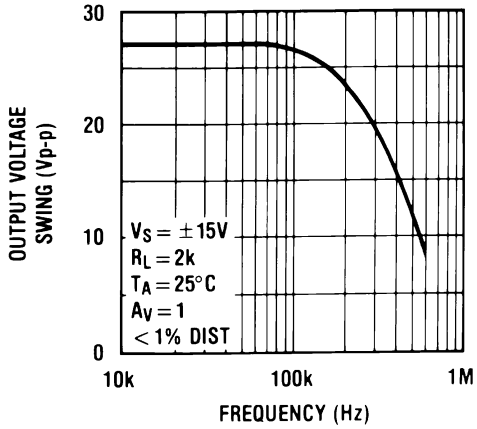

图 14. Undistorted Output Voltage Swing

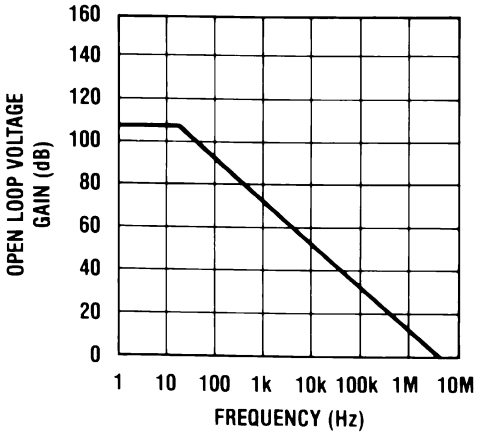

图 15. Open Loop Frequency Response

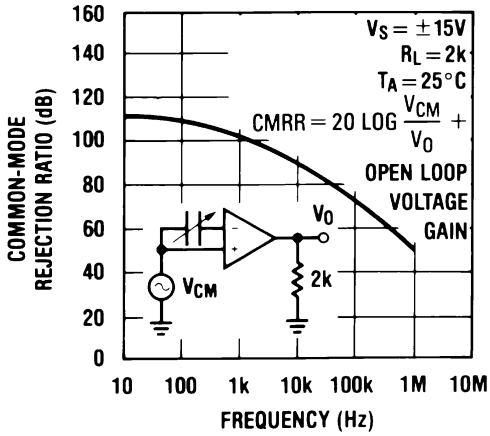

图 16. Common-Mode Rejection Ratio

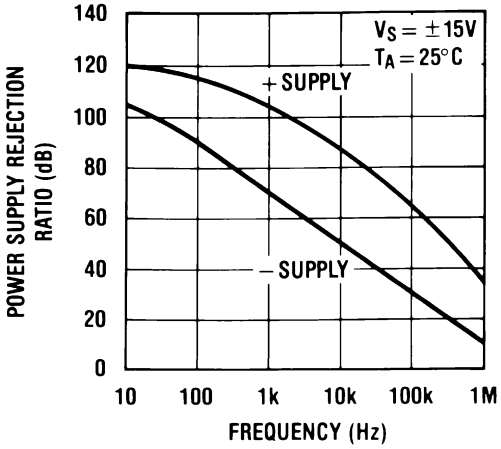

图 17. Power Supply Rejection Ratio

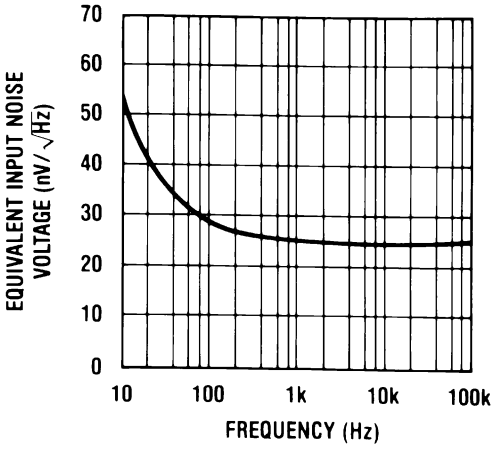

图 18. Equivalent Input Noise Voltage

Typical Characteristics (接下页)

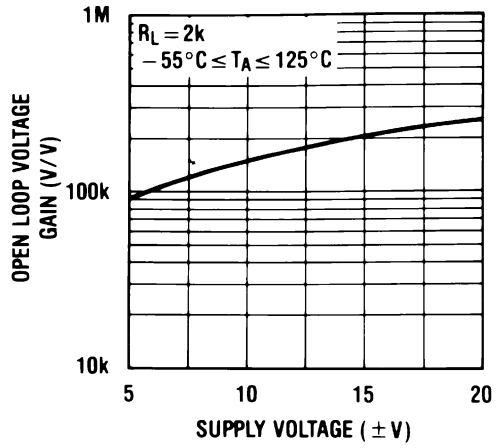

图 19. Open Loop Voltage Gain

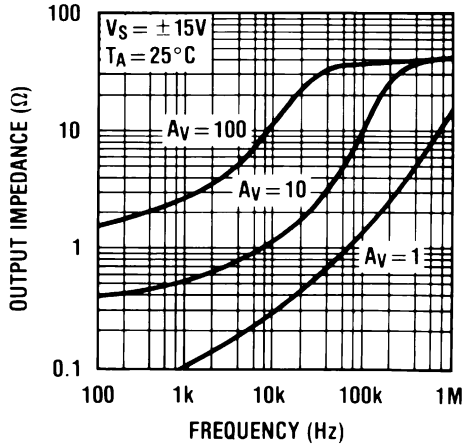

图 20. Output Impedance

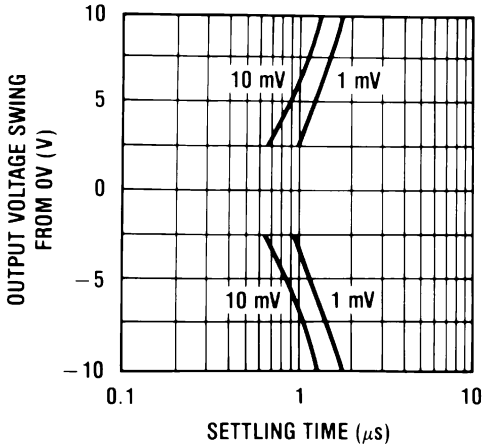

图 21. Inverter Settling Time

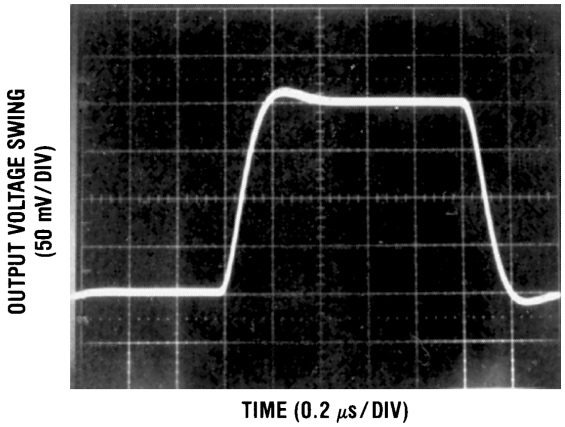

R_L = 2 kΩ C_L = 10 pF

图 22. Small Signal Inverting

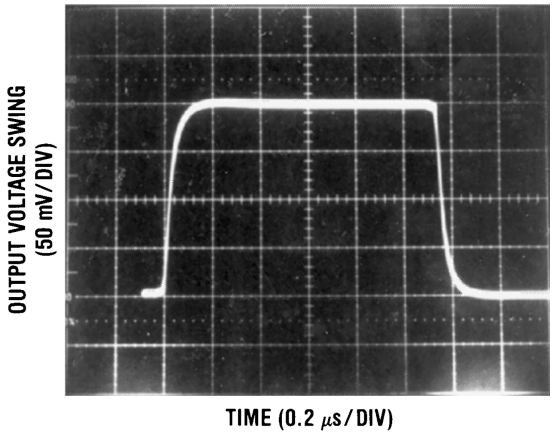

R_L = 2 kΩ C_L = 10 pF

图 23. Small Signal Non-Inverting

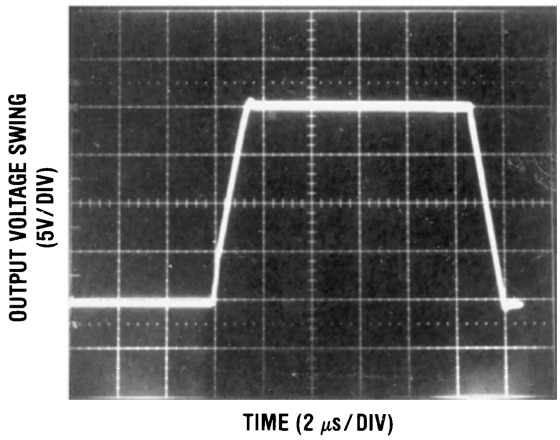

R_L = 2 kΩ C_L = 10 pF

图 24. Large Signal Inverting

版权 © 2017, Texas Instruments Incorporated

Typical Characteristics (接下页)

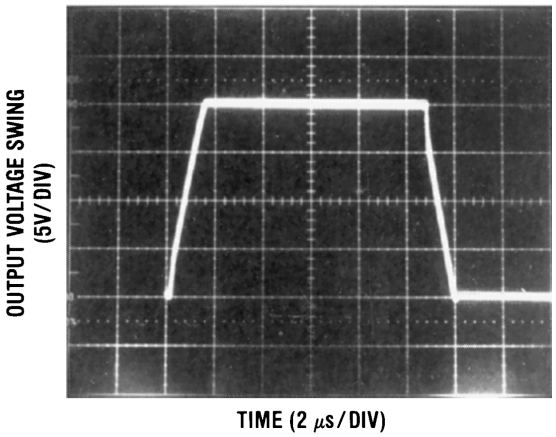

R_L = 2 kΩ C_L = 10 pF

图 25. Large Signal Non-Inverting

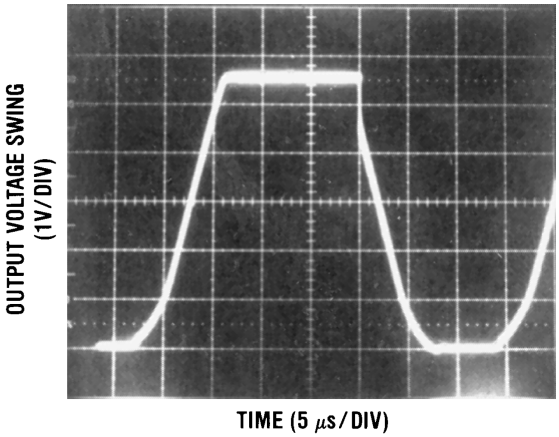

R_L = 100 Ω C_L = 10 pF

图 26. Current Limit

7 Detailed Description

7.1 Overview

The LF412-N-MIL devices are low cost, high speed, JFET input operational amplifiers with very low input offset voltage and input offset voltage drift. They require low supply current yet maintain a large gain bandwidth product and fast slew rate. In addition, well matched high voltage JFET input devices provide very low input bias and offset currents. The LF412-N-MIL dual is pin compatible with the LM1558, allowing designers to immediately upgrade the overall performance of existing designs.

These amplifiers may be used in applications such as high speed integrators, fast D/A converters, sample and hold circuits and many other circuits requiring low input offset voltage and drift, low input bias current, high input impedance, high slew rate and wide bandwidth.

7.2 Functional Block Diagram

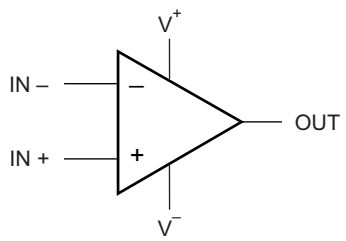

Copyright © 2016,
Texas Instruments Incorporated

图 27. Each Amplifier

7.3 Feature Description

The amplifier's differential inputs consist of a non-inverting input (+IN) and an inverting input (-IN). The amplifier amplifies only the difference in voltage between the two inputs, which is called the differential input voltage. The output voltage of the op-amp V_{OUT} is given by the equation $V_{OUT} = A_{OL}(IN+ - IN-)$.

版权 © 2017, Texas Instruments Incorporated

7.4 Device Functional Modes

7.4.1 Input and Output Stage

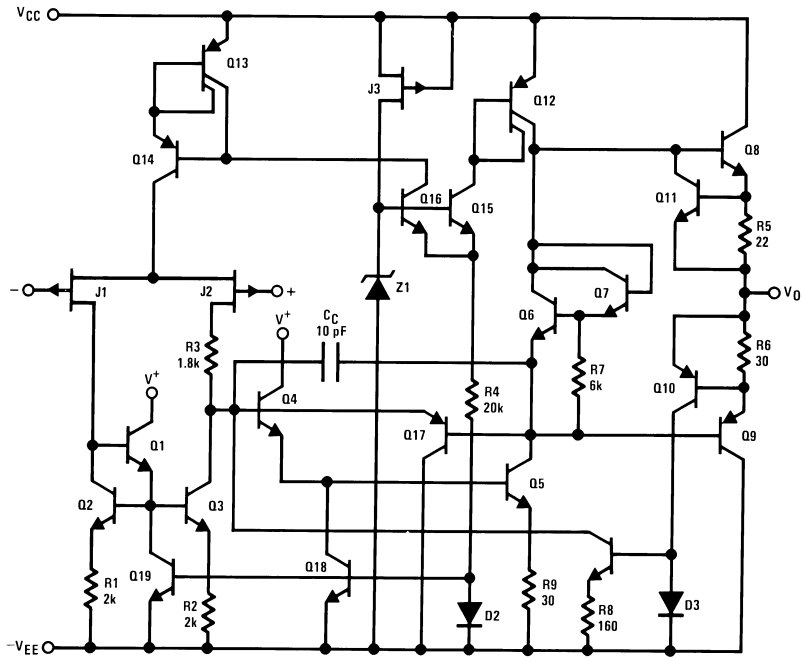

图 28. 1/2 Dual LF412-N-MIL

8 Application and Implementation

注

Information in the following applications sections is not part of the TI component specification, and TI does not warrant its accuracy or completeness. TI's customers are responsible for determining suitability of components for their purposes. Customers should validate and test their design implementation to confirm system functionality.

8.1 Application Information

The LF412-N-MIL series of JFET input dual op amps are internally trimmed (BI-FET II™) providing very low input offset voltages and input offset voltage drift. These JFETs have large reverse breakdown voltages from gate to source and drain eliminating the need for clamps across the inputs. Therefore, large differential input voltages can easily be accommodated without a large increase in input current. The maximum differential input voltage is independent of the supply voltages. However, neither of the input voltages should be allowed to exceed the negative supply as this will cause large currents to flow which can result in a destroyed unit.

8.2 Typical Application

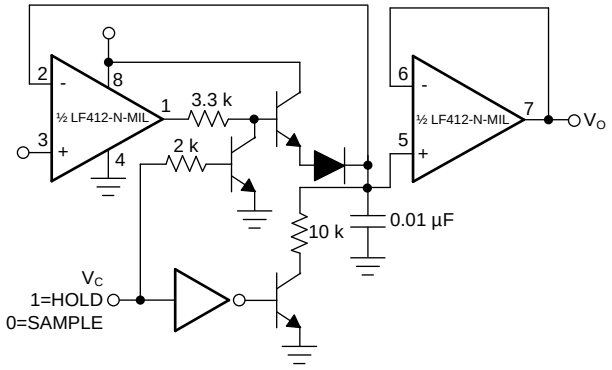

Copyright © 2017, Texas Instruments Incorporated

图 29. Single-Supply Sample and Hold

8.2.1 Design Requirements

Single-supply.

8.2.2 Detailed Design Procedure

Exceeding the negative common-mode limit on either input will cause a reversal of the phase to the output and force the amplifier output to the corresponding high or low state.

Exceeding the negative common-mode limit on both inputs will force the amplifier output to a high state. In neither case does a latch occur since raising the input back within the common-mode range again puts the input stage and thus the amplifier in a normal operating mode.

Exceeding the positive common-mode limit on a single input will not change the phase of the output, however, if both inputs exceed the limit, the output of the amplifier may be forced to a high state.

The amplifiers will operate with a common-mode input voltage equal to the positive supply; however, the gain bandwidth and slew rate may be decreased in this condition. When the negative common-mode voltage swings to within 3V of the negative supply, an increase in input offset voltage may occur.

Each amplifier is individually biased by a zener reference which allows normal circuit operation on ±6 V power supplies. Supply voltages less than these may result in lower gain bandwidth and slew rate.

版权 © 2017, Texas Instruments Incorporated

Typical Application (接下页)

The amplifiers will drive a 2 kΩ load resistance to ±10 V over the full temperature range. If the amplifier is forced to drive heavier load currents, however, an increase in input offset voltage may occur on the negative voltage swing and finally reach an active current limit on both positive and negative swings.

Precautions should be taken to ensure that the power supply for the integrated circuit never becomes reversed in polarity or that the unit is not inadvertently installed backwards in a socket as an unlimited current surge through the resulting forward diode within the IC could cause fusing of the internal conductors and result in a destroyed unit.

As with most amplifiers, care should be taken with lead dress, component placement and supply decoupling in order to ensure stability. For example, resistors from the output to an input should be placed with the body close to the input to minimize “pick-up” and maximize the frequency of the feedback pole by minimizing the capacitance from the input to ground.

A feedback pole is created when the feedback around any amplifier is resistive. The parallel resistance and capacitance from the input of the device (usually the inverting input) to AC ground set the frequency of the pole. In many instances the frequency of this pole is much greater than the expected 3 dB frequency of the closed loop gain and consequently there is negligible effect on stability margin. However, if the feedback pole is less than approximately 6 times the expected 3 dB frequency a lead capacitor should be placed from the output to the input of the op amp. The value of the added capacitor should be such that the RC time constant of this capacitor and the resistance it parallels is greater than or equal to the original feedback pole time constant.

8.2.3 Application Curves

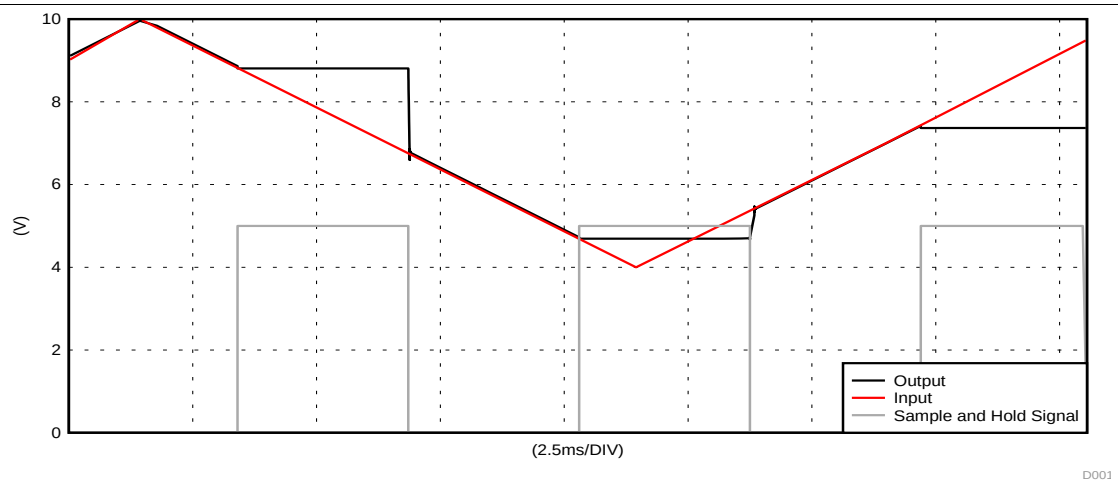

图 30. Sample and Hold Waveforms

9 Power Supply Recommendations

For proper operation, the power supplies must be properly decoupled. For decoupling the supply lines it is suggested that 0.1 µF capacitors be placed as close as possible to the op amp power supply pins. The minimum power supply voltage is ±5 V.

10 Layout

10.1 Layout Guidelines

As with most amplifiers, care should be taken with lead dress, component placement and supply decoupling in order to ensure stability. For example, resistors from the output to an input should be placed with the body close to the input to minimize “pick-up” and maximize the frequency of the feedback pole by minimizing the capacitance from the input to ground.

10.2 Layout Example

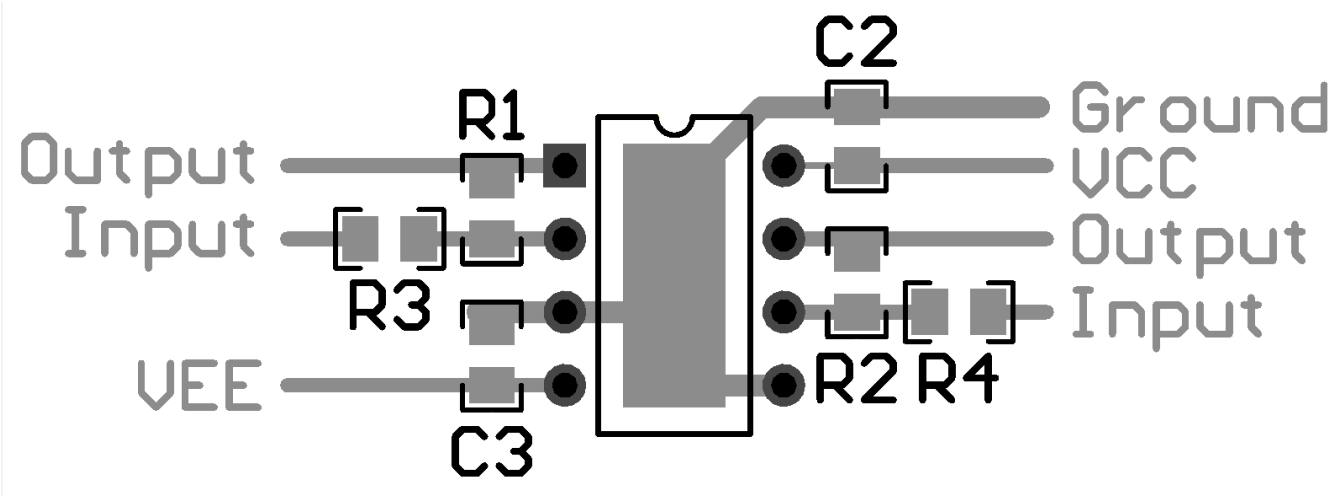

图 31. LF412-N-MIL Layout

版权 © 2017, Texas Instruments Incorporated

11 器件和文档支持

11.1 接收文档更新通知

要接收文档更新通知，请导航至德州仪器 TI.com.cn 上的器件产品文件夹。请单击右上角的*通知我* 进行注册，即可收到任意产品信息更改每周摘要。有关更改的详细信息，请查看任意已修订文档中包含的修订历史记录。

11.2 社区资源

下列链接提供到 TI 社区资源的连接。链接的内容由各个分销商"按照原样"提供。这些内容并不构成 TI 技术规范，并且不一定反映 TI 的观点；请参阅 TI 的 《使用条款》。

TI E2E™ 在线社区 ***TI 的工程师对工程师 (E2E) 社区。***此社区的创建目的在于促进工程师之间的协作。在 e2e.ti.com 中，您可以咨询问题、分享知识、拓展思路并与同行工程师一道帮助解决问题。

设计支持 ***TI 参考设计支持*** 可帮助您快速查找有帮助的 E2E 论坛、设计支持工具以及技术支持的联系信息。

11.3 商标

BI-FET II, E2E are trademarks of Texas Instruments.
All other trademarks are the property of their respective owners.

11.4 静电放电警告

ESD 可能会损坏该集成电路。德州仪器 (TI) 建议通过适当的预防措施处理所有集成电路。如果不遵守正确的处理措施和安装程序，可能会损坏集成电路。

ESD 的损坏小至导致微小的性能降级，大至整个器件故障。 精密的集成电路可能更容易受到损坏，这是因为非常细微的参数更改都可能会导致器件与其发布的规格不相符。

11.5 Glossary

SLYZ022 — *TI Glossary*.

This glossary lists and explains terms, acronyms, and definitions.

12 机械、封装和可订购信息

以下页面包括机械、封装和可订购信息。这些信息是指定器件的最新可用数据。这些数据发生变化时，我们可能不会另行通知或修订此文档。如欲获取此产品说明书的浏览器版本，请参阅左侧的导航栏。

版权 © 2017, Texas Instruments Incorporated

PACKAGING INFORMATION

Orderable part number	Status (1)	Material type (2)	Package | Pins	Package qty | Carrier	RoHS (3)	Lead finish/ Ball material (4)	MSL rating/ Peak reflow (5)	Op temp (°C)	Part marking (6)
LF412MH	Active	Production	TO-99 (LMC) | 8	500 | OTHER	No	Call TI	Level-1-NA-UNLIM	-55 to 125	(LF412MH, LF412MH)
LF412MH/NOPB	Active	Production	TO-99 (LMC) | 8	500 | OTHER	Yes	Call TI	Level-1-NA-UNLIM	-55 to 125	(LF412MH, LF412MH)

(1) **Status:** For more details on status, see our product life cycle.

(2) **Material type:** When designated, preproduction parts are prototypes/experimental devices, and are not yet approved or released for full production. Testing and final process, including without limitation quality assurance, reliability performance testing, and/or process qualification, may not yet be complete, and this item is subject to further changes or possible discontinuation. If available for ordering, purchases will be subject to an additional waiver at checkout, and are intended for early internal evaluation purposes only. These items are sold without warranties of any kind.

(3) **RoHS values:** Yes, No, RoHS Exempt. See the TI RoHS Statement for additional information and value definition.

(4) **Lead finish/Ball material:** Parts may have multiple material finish options. Finish options are separated by a vertical ruled line. Lead finish/Ball material values may wrap to two lines if the finish value exceeds the maximum column width.

(5) **MSL rating/Peak reflow:** The moisture sensitivity level ratings and peak solder (reflow) temperatures. In the event that a part has multiple moisture sensitivity ratings, only the lowest level per JEDEC standards is shown. Refer to the shipping label for the actual reflow temperature that will be used to mount the part to the printed circuit board.

(6) **Part marking:** There may be an additional marking, which relates to the logo, the lot trace code information, or the environmental category of the part.

Multiple part markings will be inside parentheses. Only one part marking contained in parentheses and separated by a "~" will appear on a part. If a line is indented then it is a continuation of the previous line and the two combined represent the entire part marking for that device.

Important Information and Disclaimer: The information provided on this page represents TI's knowledge and belief as of the date that it is provided. TI bases its knowledge and belief on information provided by third parties, and makes no representation or warranty as to the accuracy of such information. Efforts are underway to better integrate information from third parties. TI has taken and continues to take reasonable steps to provide representative and accurate information but may not have conducted destructive testing or chemical analysis on incoming materials and chemicals. TI and TI suppliers consider certain information to be proprietary, and thus CAS numbers and other limited information may not be available for release.

In no event shall TI's liability arising out of such information exceed the total purchase price of the TI part(s) at issue in this document sold by TI to Customer on an annual basis.

LMC0008A

TO-CAN - 5.72 mm max height

TRANSISTOR OUTLINE

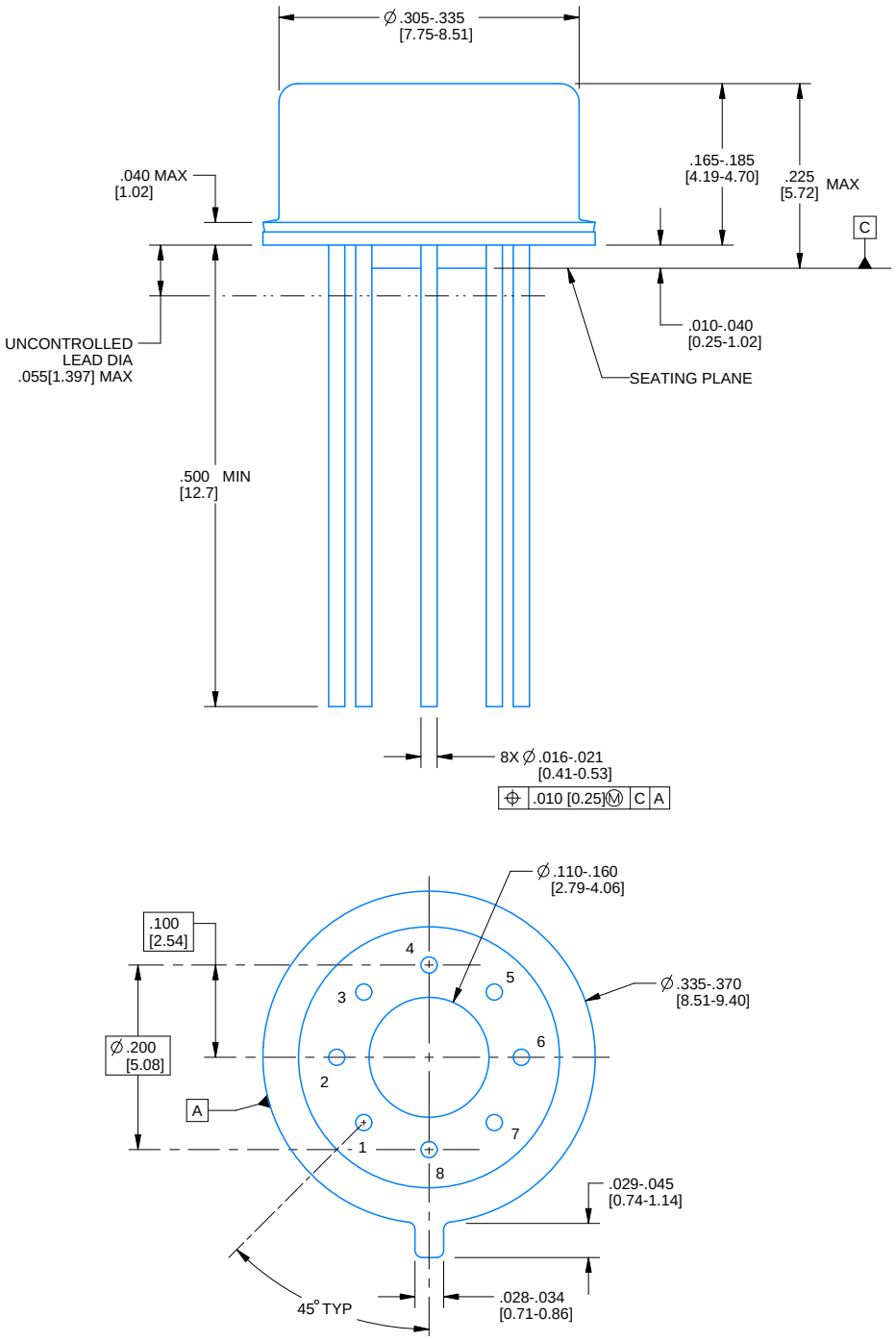

4220610/B 09/2024

NOTES:

1. All linear dimensions are in inches [millimeters]. Any dimensions in parenthesis are for reference only. Dimensioning and tolerancing per ASME Y14.5M.
2. This drawing is subject to change without notice.
3. Pin numbers shown for reference only. Numbers may not be marked on package.
4. Reference JEDEC registration MO-002/TO-99.

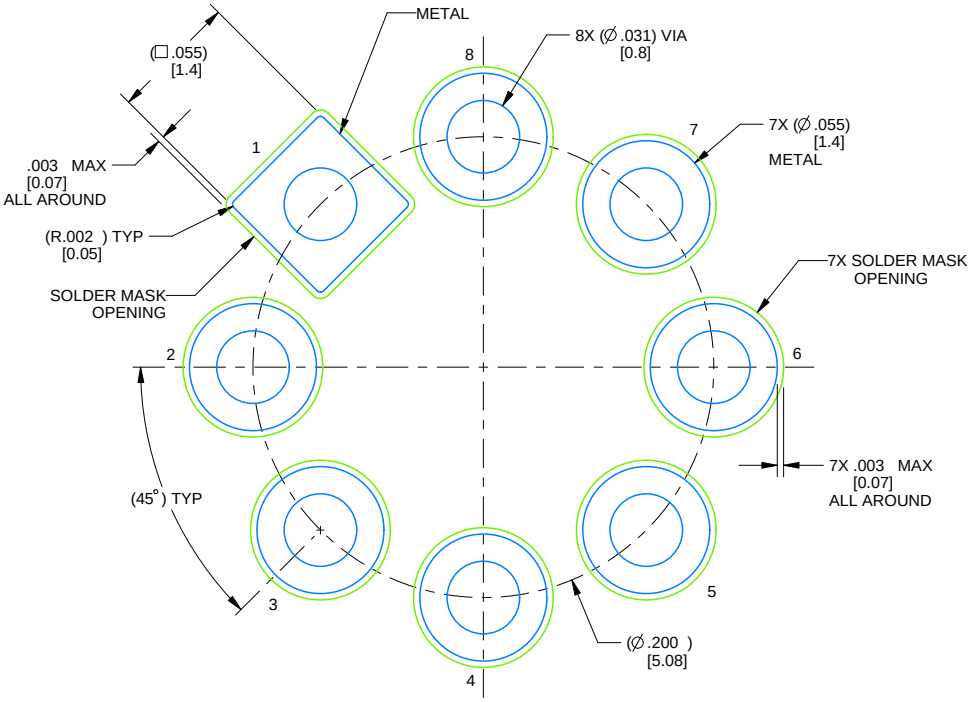

LAND PATTERN EXAMPLE
NON-SOLDER MASK DEFINED
SCALE: 12X

4220610/B 09/2024

重要通知和免责声明

TI“按原样”提供技术和可靠性数据（包括数据表）、设计资源（包括参考设计）、应用或其他设计建议、网络工具、安全信息和其他资源，不保证没有瑕疵且不做出任何明示或暗示的担保，包括但不限于对适销性、与某特定用途的适用性或不侵犯任何第三方知识产权的暗示担保。

这些资源可供使用 TI 产品进行设计的熟练开发人员使用。您将自行承担以下全部责任：(1) 针对您的应用选择合适的 TI 产品，(2) 设计、验证并测试您的应用，(3) 确保您的应用满足相应标准以及任何其他安全、安保法规或其他要求。

这些资源如有变更，恕不另行通知。TI 授权您仅可将这些资源用于研发本资源所述的 TI 产品的相关应用。严禁以其他方式对这些资源进行复制或展示。您无权使用任何其他 TI 知识产权或任何第三方知识产权。对于因您对这些资源的使用而对 TI 及其代表造成的任何索赔、损害、成本、损失和债务，您将全额赔偿，TI 对此概不负责。

TI 提供的产品受 TI 销售条款)、TI 通用质量指南 或 ti.com 上其他适用条款或 TI 产品随附的其他适用条款的约束。TI 提供这些资源并不会扩展或以其他方式更改 TI 针对 TI 产品发布的适用的担保或担保免责声明。 除非德州仪器 (TI) 明确将某产品指定为定制产品或客户特定产品，否则其产品均为按确定价格收入目录的标准通用器件。

TI 反对并拒绝您可能提出的任何其他或不同的条款。

版权所有 © 2026，德州仪器 (TI) 公司

最后更新日期：2025 年 10 月