具有施密特触发输入和三态输出的 TXU0104-Q1 汽车类 4 位定向电压电平转换器

1 特性

- 符合面向汽车应用的 AEC-Q100 标准
- 采用具有可润湿侧翼的 QFN (WBQA) 封装
- 完全可配置的双电源轨设计允许各个端口在 1.1V 至 5.5V 范围内运行
- 在 3.3V 至 5.0V 范围内，支持最高 200Mbps 的速率
- 施密特触发输入可实现慢速和高噪声输入
- 带集成静态下拉电阻器的输入阻止通道流动
- 高驱动强度（在 5V 时最高 12mA）
- 低功耗
  - 最大值 3μA (25°C)
  - 最大值 6μA（-40°C 至 125°C）
- V_{CC} 隔离和 V_{CC} 断开 ($I_{off\text{-}float}$) 特性
  - 如果任何一个 V_{CC} 输入低于 100mV 或已断开，则所有输出均禁用且处于高阻抗状态
- I_{off} 支持局部断电模式运行
- 带有 $V_{CC(MIN)}$ 电路的控制逻辑 (OE) 允许从端口 A 或 B 进行控制
- 引脚排列兼容 TXB 系列电平转换器
- 在支持常见应用的其他型号中可用：TXU0204-Q1、TXU0304-Q1
- 工作温度范围为 –40°C 至 +125°C
- 闩锁性能超过 100mA，符合 JESD 78 II 类规范
- ESD 保护性能超过 JESD 22 规范要求
  - 2500V 人体放电模型
  - 1500V 充电器件模型

2 应用

- 消除缓慢或嘈杂输入信号
- 驱动指示 LED 或蜂鸣器
- 机械开关去抖
- 通用 I/O 电平转换
- 推挽电平转换（UART、SPI、JTAG 等等）

3 说明

TXU0104-Q1 是一款 4 位双电源同相定向电压电平转换器件。Ax 引脚以 V_{CCA} 逻辑电平为基准，OE 引脚可以 V_{CCA} 或 V_{CCB} 逻辑电平为基准，Bx 引脚以 V_{CCB} 逻辑电平为基准。A 端口能够接受 1.1V 至 5.5V 的输入电压，而 B 端口也可接受 1.1V 至 5.5V 的输入电压。如果 OE 相对于任一电源设为高电平，可能会发生从 A 到 B 或从 B 到 A 的定向数据传输。OE 设为低电平时，所有输出引脚均处于高阻抗状态。请参阅*器件功能模式*，简要了解控制逻辑的运行。

器件信息(1)

器件型号	封装	封装尺寸（标称值）
TXU0104-Q1WBQA	VQFN (14)	3.00mm × 2.50mm
TXU0104-Q1PW	TSSOP (14)	5.00mm × 4.40mm

(1) 如需了解所有可用封装，请参阅数据表末尾的可订购产品附录。

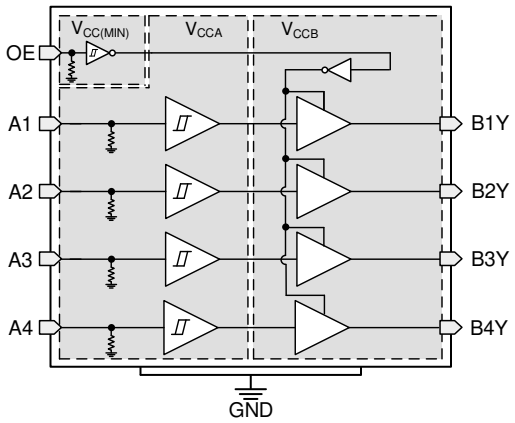

TXU0104-Q1 功能方框图

本文档旨在为方便起见，提供有关 TI 产品中文版本的信息，以确认产品的概要。有关适用的官方英文版本的最新信息，请访问 www.ti.com，其内容始终优先。TI 不保证翻译的准确性和有效性。在实际设计之前，请务必参考最新版本的英文版本。
English Data Sheet: SCES930

Table of Contents

1 特性 1
2 应用 1
3 说明 1
4 Revision History 2
5 Related Products 3
6 Pin Configuration and Functions—TXU0104-Q1 4
7 Specifications 5
7.1 Absolute Maximum Ratings 5
7.2 ESD Ratings 5
7.3 Recommended Operating Conditions 6
7.4 Thermal Information 6
7.5 Electrical Characteristics 7
7.6 Switching Characteristics: T_{sk}, T_{MAX} 9
7.7 Switching Characteristics, V_{CCA} = 1.2 ± 0.1 V 10
7.8 Switching Characteristics, V_{CCA} = 1.5 ± 0.1 V 11
7.9 Switching Characteristics, V_{CCA} = 1.8 ± 0.15 V 12
7.10 Switching Characteristics, V_{CCA} = 2.5 ± 0.2 V 13
7.11 Switching Characteristics, V_{CCA} = 3.3 ± 0.3 V 14
7.12 Switching Characteristics, V_{CCA} = 5.0 ± 0.5 V 15
7.13 Operating Characteristics 16
7.14 Typical Characteristics 17
8 Parameter Measurement Information 18
8.1 Load Circuit and Voltage Waveforms 18
9 Detailed Description 20
9.1 Overview 20
9.2 Functional Block Diagram 20
9.3 Feature Description 21
9.4 Device Functional Modes 24
10 Application and Implementation 25
10.1 Application Information 25
10.2 Typical Application 25
11 Power Supply Recommendations 26
12 Layout 27
12.1 Layout Guidelines 27
12.2 Layout Example 27
13 Device and Documentation Support 28
13.1 Device Support 28
13.2 Documentation Support 28
13.3 接收文档更新通知 28
13.4 支持资源 28
13.5 Trademarks 28
13.6 Electrostatic Discharge Caution 28
13.7 术语表 28
14 Mechanical, Packaging, and Orderable Information 28

4 Revision History

注：以前版本的页码可能与当前版本的页码不同

Changes from Revision A (May 2021) to Revision B (March 2022)	Page
• 添加了 WBQA 封装和支持信息	1

Changes from Revision * (April 2021) to Revision A (May 2021)	Page
• 将数据表状态从*预告信息* 更改为*量产数据*	1

Copyright © 2022 Texas Instruments Incorporated

5 Related Products

TXU0x04-Q1 Automotive 4-Bit Unidirectional Voltage-Level Translators	TXU0x04-Q1 are 4-bit, dual-supply noninverting fixed direction voltage level translators. These devices are compatible to the TXB0104-Q1 with the same pinout allowing for a drop in replacement. The OE pin can be referenced to either V_{CCA} or V_{CCB} logic levels allowing for one of the TXU0x04-Q1 devices to be used for fixed direction, high drive applications which the TXB0104-Q1 is not recommended to support.
TXU0204-Q1	TXU0204-Q1 is a 4-bit, dual-supply noninverting fixed direction voltage level translators with 2 channels in the opposing direction commonly used for GPIO, UART, and JTAG translation.

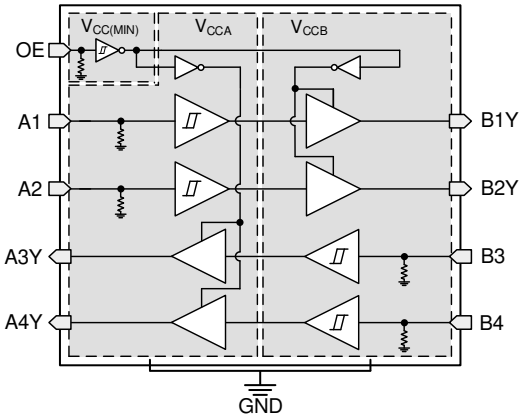

图 5-1. TXU0204-Q1 Functional Block Diagram

TXU0304-Q1	TXU0304-Q1 is a 4-bit, dual-supply noninverting fixed direction voltage level translators with 1 channel in the opposing direction commonly used for GPIO, SPI, and I2S translation.

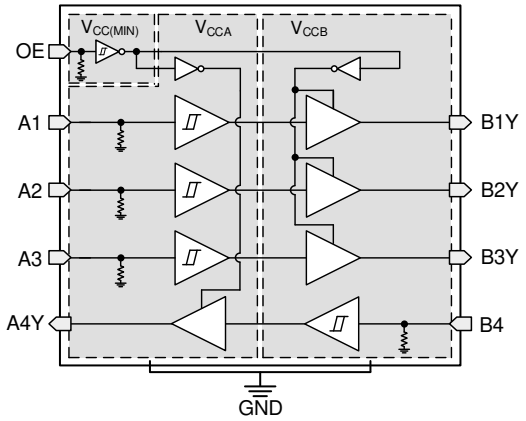

图 5-2. TXU0304-Q1 Functional Block Diagram

6 Pin Configuration and Functions—TXU0104-Q1

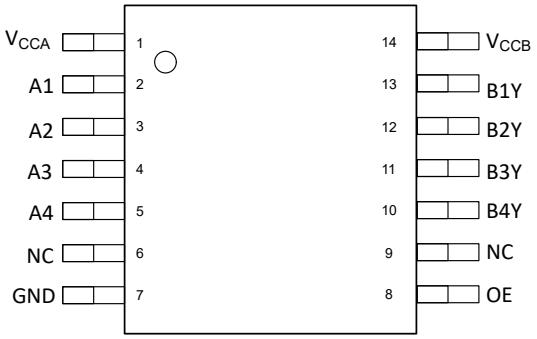

图 6-1. PW Package, 14-Pin TSSOP Transparent (Top View)

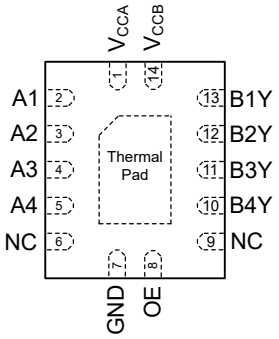

图 6-2. WBQA Package, 14-Pin VQFN Transparent (Top View)

表 6-1. TXU0104-Q1 Pin Functions

PIN		TYPE(1)	DESCRIPTION
NAME	PW, WBQA		
A1	2	I	Input A1. Referenced to V_{CCA}.
A2	3	I	Input A2. Referenced to V_{CCA}.
A3	4	I	Input A3. Referenced to V_{CCA}.
A4	5	I	Input A4. Referenced to V_{CCA}.
B1Y	13	O	Output B1. Referenced to V_{CCB}.
B2Y	12	O	Output B2. Referenced to V_{CCB}.
B3Y	11	O	Output B3. Referenced to V_{CCB}.
B4Y	10	O	Output B4. Referenced to V_{CCB}.
GND	7	—	Ground
OE	8	I	Output Enable. Pull to GND to place all outputs in high-impedance mode. Pull to V_{CCA} or V_{CCB} to enable all outputs.
NC	6, 9	—	No internal connection.
V_{CCA}	1	—	A-port supply voltage. 1.1 V ⩽ V_{CCA} ⩽ 5.5 V
V_{CCB}	14	—	B-port supply voltage. 1.1 V ⩽ V_{CCB} ⩽ 5.5 V
Thermal Pad		—	Thermal pad. May be left floating or grounded (recommended for best thermal and mechanical integrity).

(1) I = inpu, O = output

Copyright © 2022 Texas Instruments Incorporated

7 Specifications

7.1 Absolute Maximum Ratings

over operating free-air temperature range (unless otherwise noted)[1]

			MIN	MAX	UNIT
V_{CCA}	Supply voltage A		– 0.5	6.5	V
V_{CCB}	Supply voltage B		– 0.5	6.5	V
V_I	Input Voltage[2]	I/O Ports (A Port)	– 0.5	6.5	V
		I/O Ports (B Port)	– 0.5	6.5	
		OE	– 0.5	6.5	
V_O	Voltage applied to any output in the high-impedance or power-off state[2]	A Port	– 0.5	6.5	V
		B Port	– 0.5	6.5	
V_O	Voltage applied to any output in the high or low state[2] [3]	A Port	– 0.5	V_{CCA} + 0.5	V
		B Port	– 0.5	V_{CCB} + 0.5	
I_{IK}	Input clamp current	V_I < 0	– 20		mA
I_{OK}	Output clamp current	V_O < 0	– 20		mA
I_O	Continuous output current		– 25	25	mA
	Continuous current through V_{CC} or GND		– 100	100	mA
T_j	Junction Temperature			150	°C
T_{stg}	Storage temperature		– 65	150	°C

(1) Stresses beyond those listed under *Absolute Maximum Ratings* may cause permanent damage to the device. These are stress ratings only, which do not imply functional operation of the device at these or any other conditions beyond those indicated under *Recommended Operating Conditions.* Exposure beyond the limits listed in *Recommended Operating Conditions.* may affect device reliability.
(2) The input voltage and output negative-voltage ratings may be exceeded if the input and output current ratings are observed.
(3) The output positive-voltage rating may be exceeded up to 6.5 V maximum if the output current rating is observed.

7.2 ESD Ratings

			VALUE	UNIT
$V_{(ESD)}$	Electrostatic discharge	Human body model (HBM), per AEC Q100-002[1]	±2500	V
		Charged device model (CDM), per AEC Q100-011	±1500	

(1) AEC Q100-002 indicates that HBM stressing shall be in accordance with the ANSI/ESDA/JEDEC JS-001 specification

7.3 Recommended Operating Conditions

over operating free-air temperature range (unless otherwise noted) (1) (2) (3)

			MIN	MAX	UNIT
V_{CCA}	Supply voltage A		1.08	5.5	V
V_{CCB}	Supply voltage B		1.08	5.5	V
I_{OH}	High-level output current	V_{CCO} = 1.1 V		– 1.5	mA
		V_{CCO} = 1.4 V		– 3	
		V_{CCO} = 1.65 V		– 4.5	
		V_{CCO} = 2.3 V		– 8	
		V_{CCO} = 3 V		– 10	
		V_{CCO} = 4.5 V		– 12	
I_{OL}	Low-level output current	V_{CCO} = 1.1 V		1.5	mA
		V_{CCO} = 1.4 V		3	
		V_{CCO} = 1.65 V		4.5	
		V_{CCO} = 2.3 V		8	
		V_{CCO} = 3 V		10	
		V_{CCO} = 4.5 V		12	
V_I	Input voltage (3)		0	5.5	V
V_O	Output voltage	Active State	0	V_{CCO}	V
		Tri-State	0	5.5	
T_A	Operating free-air temperature		– 40	125	°C

(1) V_{CCI} is the V_{CC} associated with the input port.
(2) V_{CCO} is the V_{CC} associated with the output port.
(3) All control inputs and data I/Os of this device have weak pulldowns to ensure the line is not floating when undefined external to the device. The input leakage from these weak pulldowns is defined by the I_I specification indicated under *Electrical Characteristics.*

7.4 Thermal Information

THERMAL METRIC(1)		TXU0104				UNIT
		PW (TSSOP)	BQA (WQFN)	RUT (UQFN)	DTR (X2SON)	
		14 PINS	14 PINS	12 PINS	12 PINS	
$R_{\theta JA}$	Junction-to-ambient thermal resistance	135.8	87.2	171.9	176.6	°C/W
$R_{\theta JC(top)}$	Junction-to-case (top) thermal resistance	65.0	90.0	100.4	84.1	°C/W
$R_{\theta JB}$	Junction-to-board thermal resistance	78.8	56.0	97.1	99.1	°C/W
Y_{JT}	Junction-to-top characterization parameter	15.6	9.8	10.9	2.6	°C/W
Y_{JB}	Junction-to-board characterization parameter	78.2	56.0	95.5	98.9	°C/W
$R_{\theta JC(bottom)}$	Junction-to-case (bottom) thermal resistance	N/A	33.0	N/A	N/A	°C/W

(1) For more information about traditional and new thermal metrics, see the Semiconductor and IC Package Thermal Metrics application report.

Copyright © 2022 Texas Instruments Incorporated

7.5 Electrical Characteristics

over operating free-air temperature range (unless otherwise noted)[(1) (2)]

PARAMETER		TEST CONDITIONS	V_{CCA}	V_{CCB}	Operating free-air temperature (T_A)									UNIT
					25°C			– 40°C to 85°C			– 40°C to 125°C			
					MIN	TYP	MAX	MIN	TYP	MAX	MIN	TYP	MAX	
V_{T+}	Positive-going input-threshold voltage	Data Inputs (Ax, Bx) (Referenced to V_{CCI})	1.1 V	1.1 V				0.44		0.88	0.44		0.88	V
			1.4 V	1.4 V				0.60		0.98	0.60		0.98	
			1.65 V	1.65 V				0.76		1.13	0.76		1.13	
			2.3 V	2.3 V				1.08		1.56	1.08		1.56	
			3 V	3 V				1.48		1.92	1.48		1.92	
			4.5 V	4.5 V				2.19		2.74	2.19		2.74	
			5.5 V	5.5 V				2.65		3.33	2.65		3.33	
		OE (Referenced to V_{CCA} or V_{CCB})	1.1 V	1.1 V				0.44		0.88	0.44		0.88	V
			1.4 V	1.4 V				0.60		0.98	0.60		0.98	
			1.65 V	1.65 V				0.76		1.13	0.76		1.13	
			2.3 V	2.3 V				1.08		1.56	1.08		1.56	
			3 V	3 V				1.48		1.92	1.48		1.92	
			4.5 V	4.5 V				2.19		2.74	2.19		2.74	
			5.5 V	5.5 V				2.65		3.33	2.65		3.33	
V_{T-}	Negative-going input-threshold voltage	Data Inputs (Ax, Bx) (Referenced to V_{CCI})	1.1 V	1.1 V				0.17		0.48	0.17		0.48	V
			1.4 V	1.4 V				0.28		0.59	0.28		0.59	
			1.65 V	1.65 V				0.35		0.69	0.35		0.69	
			2.3 V	2.3 V				0.56		0.97	0.56		0.97	
			3 V	3 V				0.89		1.5	0.89		1.5	
			4.5 V	4.5 V				1.51		1.97	1.51		1.97	
			5.5 V	5.5 V				1.88		2.4	1.88		2.4	
		OE (Referenced to V_{CCA} or V_{CCB})	1.1 V	1.1 V				0.17		0.48	0.17		0.48	V
			1.4 V	1.4 V				0.28		0.59	0.28		0.59	
			1.65 V	1.65 V				0.35		0.69	0.35		0.69	
			2.3 V	2.3 V				0.56		0.97	0.56		0.97	
			3 V	3 V				0.89		1.5	0.89		1.5	
			4.5 V	4.5 V				1.51		1.97	1.51		1.97	
			5.5 V	5.5 V				1.88		2.46	1.88		2.46	
ΔV_T	Input-threshold hysteresis (V_{T+} – V_{T-})	Data Inputs (Ax, Bx) (Referenced to V_{CCI})	1.1 V	1.1 V				0.2		0.4	0.2		0.4	V
			1.4 V	1.4 V				0.25		0.5	0.25		0.5	
			1.65 V	1.65 V				0.3		0.55	0.3		0.55	
			2.3 V	2.3 V				0.38		0.65	0.38		0.65	
			3 V	3 V				0.46		0.72	0.46		0.72	
			4.5 V	4.5 V				0.58		0.93	0.58		0.93	
			5.5 V	5.5 V				0.69		1.06	0.69		1.06	
		OE (Referenced to V_{CCA} or V_{CCB})	1.1 V	1.1 V				0.15		0.41	0.15		0.41	V
			1.4 V	1.4 V				0.2		0.5	0.2		0.5	
			1.65 V	1.65 V				0.23		0.55	0.23		0.55	
			2.3 V	2.3 V				0.32		0.65	0.32		0.65	
			3 V	3 V				0.39		0.72	0.39		0.72	
			4.5 V	4.5 V				0.57		0.97	0.57		0.97	
			5.5 V	5.5 V				0.69		1.18	0.69		1.18	

Copyright © 2022 Texas Instruments Incorporated

7.5 Electrical Characteristics (continued)

over operating free-air temperature range (unless otherwise noted)[1] [2]

PARAMETER		TEST CONDITIONS	V_{CCA}	V_{CCB}	Operating free-air temperature (T_A)									UNIT
					25°C			– 40°C to 85°C			– 40°C to 125°C			
					MIN	TYP	MAX	MIN	TYP	MAX	MIN	TYP	MAX	
V_{OH}	High-level output voltage [3]	I_{OH} = – 0.1 mA	1.1V – 5.5V	1.1V – 5.5V				V_{CCO} – 0.1			V_{CCO} – 0.1			V
		I_{OH} = – 0.5 mA	1.1 V	1.1 V				0.82			0.82			
		I_{OH} = – 3 mA	1.4 V	1.4 V				1			1			
		I_{OH} = – 4.5 mA	1.65 V	1.65 V				1.2			1.2			
		I_{OH} = – 8 mA	2.3 V	2.3 V				1.7			1.7			
		I_{OH} = – 10 mA	3 V	3 V				2.2			2.2			
		I_{OH} = – 12 mA	4.5 V	4.5 V				3.7			3.7			
V_{OL}	Low-level output voltage [4]	I_{OL} = 0.1 mA	1.1V – 5.5V	1.1V – 5.5V						0.1			0.1	V
		I_{OL} = 0.5 mA	1.1 V	1.1 V						0.27			0.27	
		I_{OL} = 3 mA	1.4 V	1.4 V						0.35			0.35	
		I_{OL} = 4.5 mA	1.65 V	1.65 V						0.45			0.45	
		I_{OL} = 8 mA	2.3 V	2.3 V						0.7			0.7	
		I_{OL} = 10 mA	3 V	3 V						0.8			0.8	
		I_{OL} = 8 mA	4.5 V	4.5 V						0.55			0.55	
		I_{OL} = 12 mA	4.5 V	4.5 V						0.8			0.8	
I_I	Input leakage current	OE V_I = V_{CC} or GND	1.1V – 5.5V	1.1V – 5.5V	-0.1		1.5	-0.1		1.5	-0.1		2	µA
		Data Inputs (Ax, Bx) V_I = V_{CCI} or GND	1.1V – 5.5V	1.1V – 5.5V	– 0.1		1.5	– 0.1		1.5	– 2		2	µA
I_{off}	Partial power down current	A Port or B Port V_I or V_O = 0 V - 5.5 V	0 V	0 V - 5.5 V	– 1.5		1.5	– 2		2	– 2.5		2.5	µA
			0 V - 5.5 V	0 V	– 1.5		1.5	– 2		2	– 2.5		2.5	
$I_{off\text{-}float}$	Floating supply Partial power down current	A Port or B Port V_I or V_O = GND	Floating[5]	0 V - 5.5 V	– 1.5		1.5	– 2		2	– 2.5		2.5	µA
			0 V - 5.5 V	Floating[5]	– 1.5		1.5	– 2		2	– 2.5		2.5	
I_{OZ}	Tri-state output current	A or B Port: V_I = V_{CCI} or GND V_O = V_{CCO} or GND OE = GND	1.1V – 5.5V	1.1V – 5.5V	– 0.3		0.3	– 1		1	– 2		2	µA
I_{CCA}	V_{CCA} supply current	V_I = V_{CCI} or GND I_O = 0	1.1V – 5.5V	1.1V – 5.5V			1.5			2.5			6	µA
			0 V	5.5 V	– 0.3			– 1			– 1			
			5.5 V	0 V			1			1.5			3	
		V_I = GND I_O = 0	5.5 V	Floating[5]			1.5			7			15	
I_{CCB}	V_{CCB} supply current	V_I = V_{CCI} or GND I_O = 0	1.1V – 5.5V	1.1V – 5.5V			1.5			2.5			6	µA
			0 V	5.5 V			1			1.5			3	
			5.5 V	0 V	– 0.3			– 1			– 1			
		V_I = GND I_O = 0	Floating[5]	5.5 V			1.5			7			15	

Copyright © 2022 Texas Instruments Incorporated

7.5 Electrical Characteristics (continued)

over operating free-air temperature range (unless otherwise noted)[(1) (2)]

PARAMETER		TEST CONDITIONS	V_{CCA}	V_{CCB}	Operating free-air temperature (T_A)									UNIT
					25°C			– 40°C to 85°C			– 40°C to 125°C			
					MIN	TYP	MAX	MIN	TYP	MAX	MIN	TYP	MAX	
I_{CCA} + I_{CCB}	Combined supply current	V_I = V_{CCI} or GND I_O = 0	1.1V – 5.5V	1.1V – 5.5V			2.5			3			6	µA
C_i	Control Input Capacitance	V_I = 3.3 V or GND	3.3 V	3.3 V		2.75			3			3.5		pF
C_{io}	Data I/O Capacitance	OE = GND, V_O = 1.65V DC +1 MHz -16 dBm sine wave	3.3 V	3.3 V		3			4			4		pF

(1) V_{CCI} is the V_{CC} associated with the input port
(2) V_{CCO} is the V_{CC} associated with the output port
(3) Tested at V_I = $V_{T+(MAX)}$
(4) Tested at V_I = $V_{T-(MIN)}$
(5) Floating is defined as a node that is both not actively driven by an external device and has leakage not exeeding 10nA

7.6 Switching Characteristics: T_{sk}, T_{MAX}

over operating free-air temperature range (unless otherwise noted)

PARAMETER	TEST CONDITIONS		V_{CCI}	V_{CCO}	Operating free-air temperature (T_A) -40°C to 125°C			UNIT
					MIN	TYP	MAX	
T_{MAX} - Maximum Data Rate	50% Duty Cycle Input One channel switching 20% of pulse > 0.7*V_{CCO} 20% of pulse < 0.3*V_{CCO}	Up Translation	3.0 V - 3.6 V	4.5 V - 5.5 V	200			Mbps
			1.65 V - 1.95 V	4.5 V - 5.5 V	150			
			1.1 V - 1.3 V	4.5 V - 5.5 V	30			
			1.65 V - 1.95 V	3.0 V - 3.6 V	100			
			1.1 V - 1.3 V	3.0 V - 3.6 V	30			
			1.1 V - 1.3 V	1.65 V - 1.95 V	20			
		Down Translation	4.5 V - 5.5 V	3.0 V - 3.6 V	125			
			4.5 V - 5.5 V	1.65 V - 1.95 V	50			
			4.5 V - 5.5 V	1.1 V - 1.3 V	10			
			3.0 V - 3.6 V	1.65 V - 1.95 V	50			
			3.0 V - 3.6 V	1.1 V - 1.3 V	10			
			1.65 V - 1.95 V	1.1 V - 1.3 V	10			
t_{sk} - Output skew	Timing skew between any switching outputs on the rising or falling edge	Up Translation	3.0 V - 3.6 V	4.5 V - 5.5 V			3	ns
			1.65 V - 1.95 V	4.5 V - 5.5 V			10	
			1.1 V - 1.3 V	4.5 V - 5.5 V			42	
			1.65 V - 1.95 V	3.0 V - 3.6 V			8	
			1.1 V - 1.3 V	3.0 V - 3.6 V			42	
			1.1 V - 1.3 V	1.65 V - 1.95 V			45	
		Down Translation	4.5 V - 5.5 V	3.0 V - 3.6 V			3	
			4.5 V - 5.5 V	1.65 V - 1.95 V			10	
			4.5 V - 5.5 V	1.1 V - 1.3 V			42	
			3.0 V - 3.6 V	1.65 V - 1.95 V			8	
			3.0 V - 3.6 V	1.1 V - 1.3 V			42	
			1.65 V - 1.95 V	1.1 V - 1.3 V			45	

Copyright © 2022 Texas Instruments Incorporated

7.7 Switching Characteristics, V_{CCA} = 1.2 ± 0.1 V

See 图 8-1 and 表 8-1 for test circuit and loading. See 图 8-2, 图 8-3, and 图 8-4 for measurement waveforms.

PARAMETER		FROM	TO	Test Conditions	B-Port Supply Voltage (V_{CCB})																		UNIT
					1.2 ± 0.1 V			1.5 ± 0.1 V			1.8 ± 0.15 V			2.5 ± 0.2 V			3.3 ± 0.3 V			5.0 ± 0.5 V			
					MIN	TYP	MAX	MIN	TYP	MAX	MIN	TYP	MAX	MIN	TYP	MAX	MIN	TYP	MAX	MIN	TYP	MAX	
t_{pd}	Propagation delay	A	B	-40°C to 85°C	3.3		96	0.5		43	0.5		37	0.5		32	0.5		30	0.5		31	ns
				-40°C to 125°C	5.7		60	3.0		39	1.4		33	0.5		28	0.5		27	0.5		26	
		B	A	-40°C to 85°C	3.3		95	1.9		80	0.5		75	0.5		70	0.5		69	0.5		69	
				-40°C to 125°C	5.7		60	4.1		51	2.9		48	1.8		45	1.5		44	1.3		44	
t_{dis}	Disable time	OE	A	-40°C to 85°C	28.8		133	28.5		130	28.4		133	28.8		137	28.4		143	18.7		211	ns
				-40°C to 125°C	43.3		133	43.3		130	43.7		130	44.7		131	45.4		134	31.8		140	
		OE	B	-40°C to 85°C	32.5		150	27.6		117	25.8		110	22.5		104	22.1		112	20.1		181	
				-40°C to 125°C	48.3		149	43.2		120	40.8		113	36.8		104	36.5		107	33.8		111	
t_{en}	Enable time	OE	A	-40°C to 85°C	24.1		237	22.1		229	21.4		230	21.3		232	21.7		235	22.7		244	ns
				-40°C to 125°C	34.9		156	33.3		167	32.0		169	31.7		173	32.0		177	34.2		187	
		OE	B	-40°C to 85°C	21.3		237	14.3		152	11.2		140	8.8		130	8.2		130	8.4		132	
				-40°C to 125°C	29.8		143	23.0		116	18.6		107	15.4		97	14.5		97	14.8		103	

Copyright © 2022 Texas Instruments Incorporated

7.8 Switching Characteristics, V_{CCA} = 1.5 ± 0.1 V

See 图 8-1 and 表 8-1 for test circuit and loading. See 图 8-2, 图 8-3, and 图 8-4 for measurement waveforms.

PARAMETER		FROM	TO	Test Conditions	B-Port Supply Voltage (V_{CCB})																		UNIT
					1.2 ± 0.1 V			1.5 ± 0.1 V			1.8 ± 0.15 V			2.5 ± 0.2 V			3.3 ± 0.3 V			5.0 ± 0.5 V			
					MIN	TYP	MAX	MIN	TYP	MAX	MIN	TYP	MAX	MIN	TYP	MAX	MIN	TYP	MAX	MIN	TYP	MAX	
t_{pd}	Propagation delay	A	B	-40°C to 85°C	1.9		80	0.5		31	0.5		25	0.5		19	0.5		17	0.5		15	ns
				-40°C to 125°C	4.1		51	1.6		31	0.5		25	0.5		20	0.5		18	0.5		16	
		B	A	-40°C to 85°C	0.5		43	0.5		31	0.5		28	0.5		26	0.5		25	0.5		24	
				-40°C to 125°C	3.0		39	1.6		31	0.5		28	0.5		26	0.5		25	0.5		24	
t_{dis}	Disable time	OE	A	-40°C to 85°C	20.0		91	19.0		82	18.8		81	19.2		82	19.6		83	12.2		87	ns
				-40°C to 125°C	34.9		95	32.6		86	32.8		85	33.4		87	34.2		88	24.6		92	
		OE	B	-40°C to 85°C	27.4		127	21.7		91	19.9		82	16.3		71	15.9		71	13.7		70	
				-40°C to 125°C	44.4		130	36.7		95	34.7		86	30.2		75	29.8		75	26.6		74	
t_{en}	Enable time	OE	A	-40°C to 85°C	14.9		102	14.4		86	13.5		88	12.7		90	12.6		92	13.2		97	ns
				-40°C to 125°C	25.5		102	25.2		89	24.1		91	22.8		93	22.8		96	23.5		100	
		OE	B	-40°C to 85°C	17.9		175	12.7		80	9.1		69	6.1		57	4.9		53	4.5		54	
				-40°C to 125°C	26.6		135	21.0		81	16.8		71	12.5		60	10.8		56	10.4		57	

Copyright © 2022 Texas Instruments Incorporated

7.9 Switching Characteristics, V_{CCA} = 1.8 ± 0.15 V

See 图 8-1 and 表 8-1 for test circuit and loading. See 图 8-2, 图 8-3, and 图 8-4 for measurement waveforms.

PARAMETER		FROM	TO	Test Conditions	B-Port Supply Voltage (V_{CCB})																		UNIT
					1.2 ± 0.1 V			1.5 ± 0.1 V			1.8 ± 0.15 V			2.5 ± 0.2 V			3.3 ± 0.3 V			5.0 ± 0.5 V			
					MIN	TYP	MAX	MIN	TYP	MAX	MIN	TYP	MAX	MIN	TYP	MAX	MIN	TYP	MAX	MIN	TYP	MAX	
t_{pd}	Propagation delay	A	B	-40°C to 85°C	0.5		75	0.5		28	0.5		22	0.5		17	0.5		14	0.5		12	ns
				-40°C to 125°C	2.9		48	0.5		28	0.5		23	0.5		17	0.5		15	0.5		13	
		B	A	-40°C to 85°C	0.5		37	0.5		25	0.5		22	0.5		19	0.5		19	0.5		18	
				-40°C to 125°C	1.4		33	0.5		25	0.5		23	0.5		20	0.5		19	0.5		19	
t_{dis}	Disable time	OE	A	-40°C to 85°C	17.2		79	14.7		67	14.5		65	14.3		65	14.4		66	8.5		68	ns
				-40°C to 125°C	30.9		83	28.0		71	26.6		69	27.5		70	27.2		71	20.0		73	
		OE	B	-40°C to 85°C	25.4		121	18.7		81	16.5		71	12.8		60	12.5		58	9.8		55	
				-40°C to 125°C	41.7		123	34.0		86	30.3		76	26.2		64	25.3		62	21.8		59	
t_{en}	Enable time	OE	A	-40°C to 85°C	10.9		88	9.5		66	9.4		63	8.6		65	8.2		66	8.1		69	ns
				-40°C to 125°C	20.3		87	19.0		69	18.9		67	17.6		68	17.1		70	17.1		73	
		OE	B	-40°C to 85°C	16.7		177	10.4		75	8.1		58	4.9		46	3.3		42	2.2		39	
				-40°C to 125°C	25.1		135	18.7		77	15.5		60	11.0		49	8.7		44	7.3		42	

Copyright © 2022 Texas Instruments Incorporated

7.10 Switching Characteristics, V_{CCA} = 2.5 ± 0.2 V

See 图 8-1 and 表 8-1 for test circuit and loading. See 图 8-2, 图 8-3, and 图 8-4 for measurement waveforms.

PARAMETER		FROM	TO	Test Conditions	B-Port Supply Voltage (V_{CCB})																		UNIT
					1.2 ± 0.1 V			1.5 ± 0.1 V			1.8 ± 0.15 V			2.5 ± 0.2 V			3.3 ± 0.3 V			5.0 ± 0.5 V			
					MIN	TYP	MAX	MIN	TYP	MAX	MIN	TYP	MAX	MIN	TYP	MAX	MIN	TYP	MAX	MIN	TYP	MAX	
t_{pd}	Propagation delay	A	B	-40°C to 85°C	0.5		70	0.5		26	0.5		20	0.5		14	0.5		12	0.5		9	ns
				-40°C to 125°C	1.8		45	0.5		26	0.5		20	0.5		14	0.5		12	0.5		10	
		B	A	-40°C to 85°C	0.5		32	0.5		19	0.5		17	0.5		14	0.5		13	0.5		13	
				-40°C to 125°C	0.5		28	0.5		20	0.5		17	0.5		14	0.5		13	0.5		13	
t_{dis}	Disable time	OE	A	-40°C to 85°C	12.9		65	10.5		51	9.0		51	8.1		43	8.4		44	5.0		45	ns
				-40°C to 125°C	24.9		68	21.8		55	19.7		50	18.2		47	18.6		48	15.0		49	
		OE	B	-40°C to 85°C	23.2		112	16.5		74	14.0		61	9.0		46	9.1		44	6.4		39	
				-40°C to 125°C	38.7		115	30.9		79	27.1		66	21.6		51	20.5		48	16.8		43	
t_{en}	Enable time	OE	A	-40°C to 85°C	7.9		80	5.9		50	5.1		44	4.7		39	4.4		40	3.7		41	ns
				-40°C to 125°C	15.6		74	13.5		53	12.4		47	12.0		42	11.5		43	10.8		44	
		OE	B	-40°C to 85°C	16.3		183	9.2		74	6.0		54	4.0		36	2.1		31	0.5		27	
				-40°C to 125°C	24.4		139	17.2		76	13.0		57	9.8		38	7.1		33	4.7		29	

Copyright © 2022 Texas Instruments Incorporated

7.11 Switching Characteristics, V_{CCA} = 3.3 ± 0.3 V

See 图 8-1 and 表 8-1 for test circuit and loading. See 图 8-2, 图 8-3, and 图 8-4 for measurement waveforms.

PARAMETER		FROM	TO	Test Conditions	B-Port Supply Voltage (V_{CCB})																		UNIT
					1.2 ± 0.1 V			1.5 ± 0.1 V			1.8 ± 0.15 V			2.5 ± 0.2 V			3.3 ± 0.3 V			5.0 ± 0.5 V			
					MIN	TYP	MAX	MIN	TYP	MAX	MIN	TYP	MAX	MIN	TYP	MAX	MIN	TYP	MAX	MIN	TYP	MAX	
t_{pd}	Propagation delay	A	B	-40°C to 85°C	0.5		69	0.5		25	0.5		19	0.5		13	0.5		11	0.5		8	ns
				-40°C to 125°C	1.5		44	0.5		25	0.5		19	0.5		13	0.5		11	0.5		9	
		B	A	-40°C to 85°C	0.5		30	0.5		17	0.5		14	0.5		12	0.5		11	0.5		10	
				-40°C to 125°C	0.5		27	0.5		18	0.5		15	0.5		12	0.5		11	0.5		10	
t_{dis}	Disable time	OE	A	-40°C to 85°C	12.9		62	10.1		47	8.7		42	6.9		39	6.6		39	6.9		40	ns
				-40°C to 125°C	24.0		65	20.6		51	18.4		46	15.7		40	15.3		39	15.9		40	
		OE	B	-40°C to 85°C	22.7		109	15.7		71	13.2		59	8.5		42	7.6		38	4.7		34	
				-40°C to 125°C	37.6		111	29.5		75	25.4		63	19.2		46	18.5		42	14.2		36	
t_{en}	Enable time	OE	A	-40°C to 85°C	6.6		85	4.2		45	3.0		37	2.4		31	2.2		30	1.7		30	ns
				-40°C to 125°C	13.6		72	10.9		47	9.3		40	8.2		33	8.1		32	7.5		33	
		OE	B	-40°C to 85°C	16.3		192	8.9		76	5.4		55	2.6		34	1.8		27	0.5		22	
				-40°C to 125°C	24.3		144	16.7		78	12.2		57	8.0		36	6.6		29	3.7		24	

Copyright © 2022 Texas Instruments Incorporated

7.12 Switching Characteristics, V_{CCA} = 5.0 ± 0.5 V

See 图 8-1 and 表 8-1 for test circuit and loading. See 图 8-2, 图 8-3, and 图 8-4 for measurement waveforms.

PARAMETER		FROM	TO	Test Conditions	B-Port Supply Voltage (V_{CCB})																		UNIT
					1.2 ± 0.1 V			1.5 ± 0.1 V			1.8 ± 0.15 V			2.5 ± 0.2 V			3.3 ± 0.3 V			5.0 ± 0.5 V			
					MIN	TYP	MAX	MIN	TYP	MAX	MIN	TYP	MAX	MIN	TYP	MAX	MIN	TYP	MAX	MIN	TYP	MAX	
t_{pd}	Propagation delay	A	B	-40°C to 85°C	0.5		69	0.5		24	0.5		18	0.5		13	0.5		10	0.5		8	ns
				-40°C to 125°C	1.3		44	0.5		24	0.5		19	0.5		13	0.5		11	0.5		8	
		B	A	-40°C to 85°C	0.5		31	0.5		15	0.5		12	0.5		9	0.5		8	0.5		8	
				-40°C to 125°C	0.5		26	0.5		16	0.5		13	0.5		10	0.5		9	0.5		8	
t_{dis}	Disable time	OE	A	-40°C to 85°C	10.8		58	7.7		42	5.9		36	4.2		31	3.4		30	2.8		26	ns
				-40°C to 125°C	20.8		61	17.0		46	14.5		40	11.8		33	10.4		31	9.6		29	
		OE	B	-40°C to 85°C	9.7		109	5.9		69	13.2		56	8.4		40	6.9		36	3.7		29	
				-40°C to 125°C	37.4		111	29.2		73	24.6		60	18.1		43	16.4		39	12.2		31	
t_{en}	Enable time	OE	A	-40°C to 85°C	6.0		102	2.8		44	1.2		33	0.5		25	0.5		22	0.5		21	ns
				-40°C to 125°C	12.4		81	8.8		46	6.5		36	4.7		27	4.2		24	4.4		23	
		OE	B	-40°C to 85°C	16.7		212	8.8		82	4.8		58	1.6		35	0.5		26	0.5		19	
				-40°C to 125°C	24.8		158	16.7		83	11.7		60	6.9		37	4.7		28	3.5		21	

Copyright © 2022 Texas Instruments Incorporated

7.13 Operating Characteristics

T_A = 25℃ (1)

PARAMETER		Test Conditions	Supply Voltage (V_{CCB} = V_{CCA})						UNIT
			1.2 ± 0.1V	1.5 ± 0.1V	1.8 ± 0.15V	2.5 ± 0.2V	3.3 ± 0.3V	5.0 ± 0.5V	
			TYP	TYP	TYP	TYP	TYP	TYP	
C_{pdA} (2)	A to B: outputs enabled	A Port CL = 0, RL = Open f = 10 MHz t_{rise} = t_{fall} = 1 ns	2	2	2	2	2	3	pF
	A to B: outputs disabled		2	2	2	2	2	3	
	B to A: outputs enabled		12	12	12	13	13	16	
	B to A: outputs disabled		2	2	2	2	2	3	
C_{pdB} (3)	A to B: outputs enabled	B Port CL = 0, RL = Open f = 10 MHz t_{rise} = t_{fall} = 1 ns	12	12	12	13	13	16	pF
	A to B: outputs disabled		2	2	2	2	2	3	
	B to A: outputs enabled		2	2	2	2	2	3	
	B to A: outputs disabled		2	2	2	2	2	3	

(1) See the *CMOS Power Consumption and C_{pd} Calculation* application report for additional information about how power dissipation capacitance affects power consumption.
(2) A-Port power dissipation capacitance per transceiver.
(3) B-Port power dissipation capacitance per transceiver.

Copyright © 2022 Texas Instruments Incorporated

7.14 Typical Characteristics

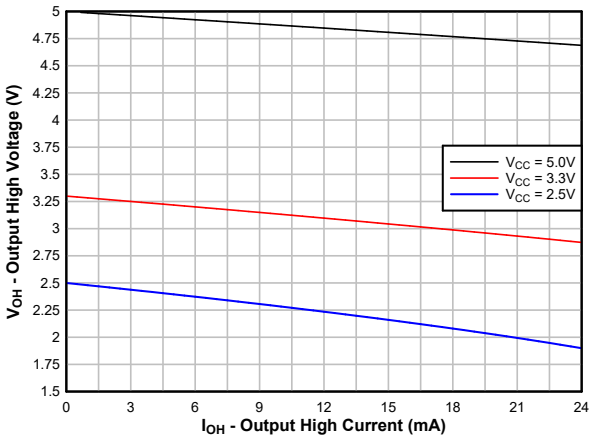

图 7-1. Typical (T_A=25°C) Output High Voltage (V_{OH}) vs Source Current (I_{OH})

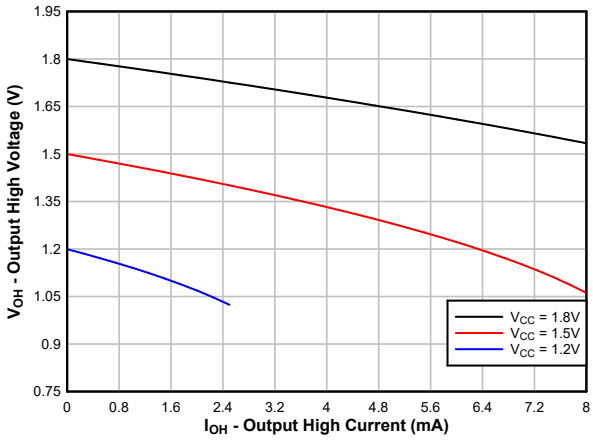

图 7-2. Typical (T_A=25°C) Output High Voltage (V_{OH}) vs Source Current (I_{OH})

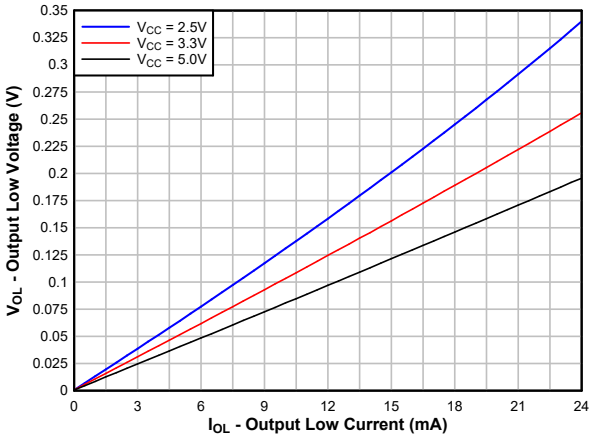

图 7-3. Typical (T_A=25°C) Output Low Voltage (V_{OL}) vs Sink Current (I_{OL})

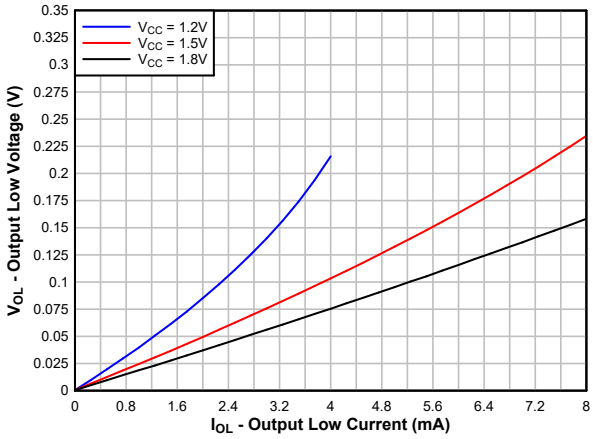

图 7-4. Typical (T_A=25°C) Output Low Voltage (V_{OL}) vs Sink Current (I_{OL})

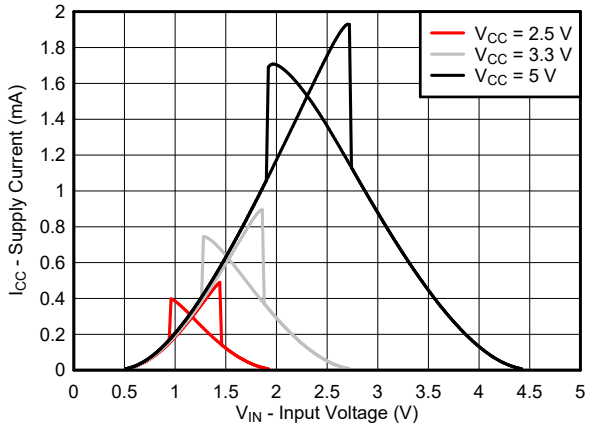

图 7-5. Typical (T_A=25°C) Supply Current (I_{CC}) vs Input Voltage (V_{IN})

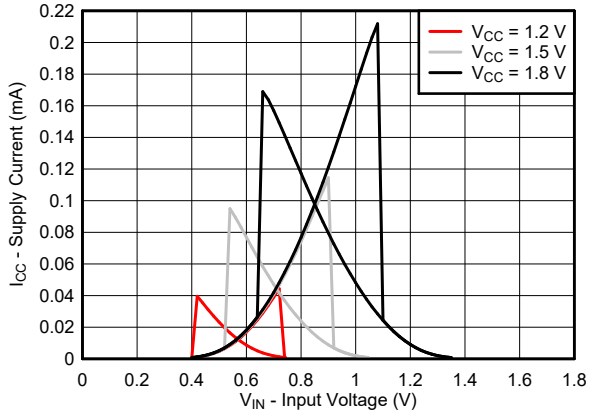

图 7-6. Typical (T_A=25°C) Supply Current (I_{CC}) vs Input Voltage (V_{IN})

8 Parameter Measurement Information

8.1 Load Circuit and Voltage Waveforms

Unless otherwise noted, generators supply all input pulses that have the following characteristics:

- f = 1 MHz
- Z_O = 50 Ω
- Δt/ΔV ≤ 1 ns/V

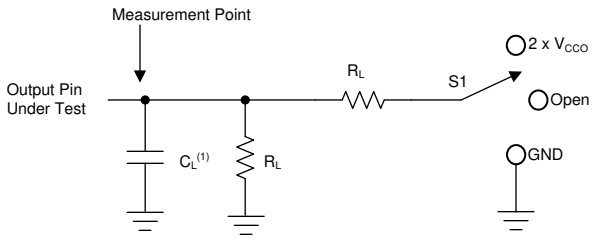

A. C_L includes probe and jig capacitance.

图 8-1. Load Circuit

表 8-1. Load Circuit Conditions

Parameter		V_{CCO}	R_L	C_L	S_1	V_{TP}
t_{pd}	Propagation (delay) time	1.1 V – 5.5 V	10 kΩ	5 pF	Open	N/A
t_{en}, t_{dis}	Enable time, disable time	1.1 V – 1.6 V	10 kΩ	5 pF	2 × V_{CCO}	0.1 V
		1.65 V – 2.7 V	10 kΩ	5 pF	2 × V_{CCO}	0.15 V
		3.0 V – 5.5 V	10 kΩ	5 pF	2 × V_{CCO}	0.3 V
t_{en}, t_{dis}	Enable time, disable time	1.1 V – 1.6 V	10 kΩ	5 pF	GND	0.1 V
		1.65 V – 2.7 V	10 kΩ	5 pF	GND	0.15 V
		3.0 V – 5.5 V	10 kΩ	5 pF	GND	0.3 V

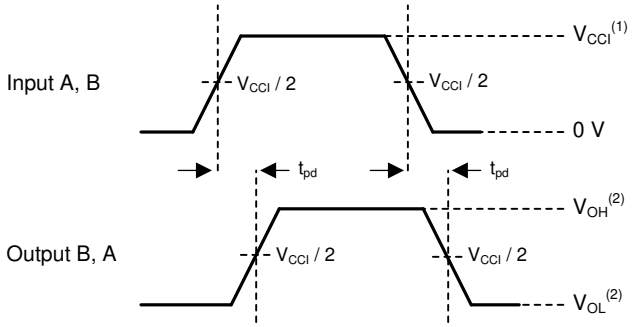

1. V_{CCI} is the supply pin associated with the input port.
2. V_{OH} and V_{OL} are typical output voltage levels that occur with specified R_L, C_L, and S_1

图 8-2. Propagation Delay

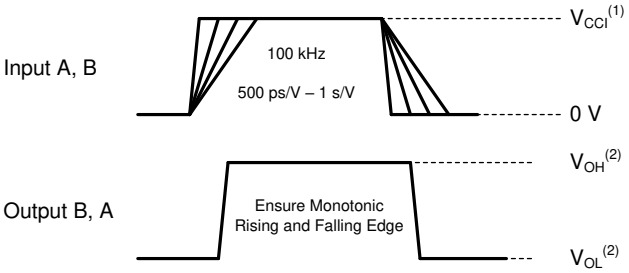

1. V_{CCI} is the supply pin associated with the input port.
2. V_{OH} and V_{OL} are typical output voltage levels that occur with specified R_L, C_L, and S_1

图 8-3. Input Transition Rise and Fall Rate

Copyright © 2022 Texas Instruments Incorporated

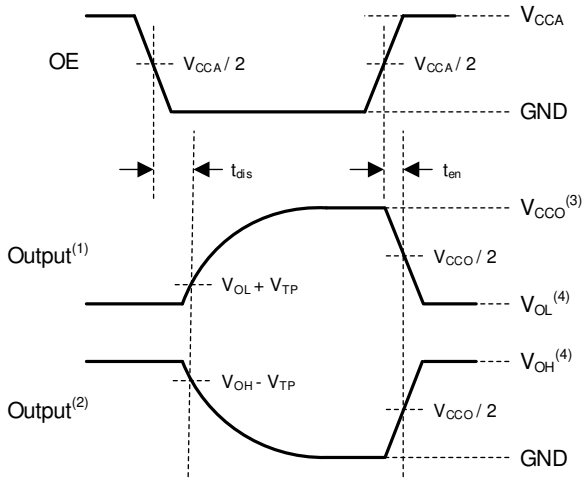

1. Output waveform on the condition that input is driven to a valid Logic Low.
2. Output waveform on the condition that input is driven to a valid Logic High.
3. V_{CCO} is the supply pin associated with the output port.
4. V_{OH} and V_{OL} are typical output voltage levels with specified R_L, C_L, and S_1.

图 8-4. Enable Time And Disable Time

9 Detailed Description

9.1 Overview

The TXU0104-Q1 is a 4-bit translating transceiver that uses two individually configurable power-supply rails. The device is operational with V_{CCA} and V_{CCB} supplies as low as 1.1 V and as high as 5.5 V. Additionally, the device can be operated with V_{CCA} = V_{CCB}. The A port is designed to track V_{CCA}, and the B port is designed to track V_{CCB}.

The TXU0104-Q1 device is designed for asynchronous communication between data buses, and transmits data with fixed direction from the A bus to the B bus on some channels and from the B bus to the A bus on the remaining channels. The output-enable input (OE) is used to disable the outputs so the buses are effectively isolated. The output-enable pin of the TXU0104-Q1 (OE) can be referenced to either V_{CCA} or V_{CCB}. The OE pin can be left floating or externally pulled down to ground to ensure the high-impedance state of the level shifter outputs during power up or power down.

This device is fully specified for partial-power-down applications using the I_{off} current. The I_{off} protection circuitry ensures that no excessive current is drawn from or sourced into an input or output while the device is powered down.

The VCC isolation or VCC disconnect feature ensures that if either VCC is less than 100 mV or disconnected with the complementary supply within recommended operating conditions, outputs are disabled and set to the high-impedance state while the supply current is maintained. The $I_{off\text{-}float}$ circuitry ensures that no excessive current is drawn from or sourced into an input or output while the supply is floating.

Glitch-free power supply sequencing allows either supply rail to be powered on or off in any order while providing robust power sequencing performance.

9.2 Functional Block Diagram

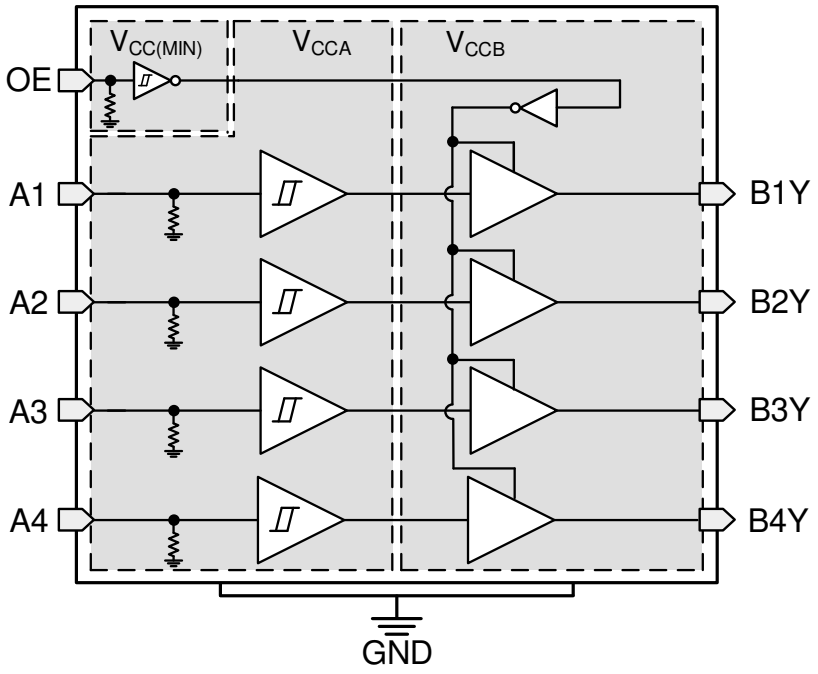

Copyright © 2022 Texas Instruments Incorporated

9.3 Feature Description

9.3.1 CMOS Schmitt-Trigger Inputs with Integrated Pulldowns

Standard CMOS inputs are high impedance and are typically modeled as a resistor in parallel with the input capacitance given in the *Electrical Characteristics*. The worst case resistance is calculated with the maximum input voltage, given in the *Absolute Maximum Ratings*, and the maximum input leakage current, given in the *Electrical Characteristics*, using ohm's law (R = V ÷ I).

The Schmitt-trigger input architecture provides hysteresis as defined by ΔV_T in the *Electrical Characteristics*, which makes this device extremely tolerant to slow or noisy inputs. Driving the inputs slowly will increase dynamic current consumption of the device. See *Understanding Schmitt Triggers* for additional information regarding Schmitt-trigger inputs.

9.3.1.1 Inputs with Integrated Static Pull-Down Resistors

This device has 5 MΩ typical integrated weak pull-downs for each input. This feature allows all inputs to be left floating without the concern for unstable outputs or increased current consumption. This also helps to reduce external component count for applications where not all channels are used or need to be fixed low. If an external pull-up is required, it should be no larger than 1 MΩ to avoid contention with the 5 MΩ internal pull-down.

9.3.2 Control Logic (OE) with $V_{CC(MIN)}$ Circuitry

The output-enable input (OE) is used to disable the outputs so the buses are effectively isolated. The output-enable pin of the TXU0x04-Q1 has $V_{CC(MIN)}$ circuitry, which allows the OE pin to operate with the lower supply voltage. The *Over-Voltage Tolerant Inputs* feature allows the OE pin to operate with the higher supply voltage. This combination means that the enable pin can be referenced to either V_{CCA} or V_{CCB} supply. Multiple permutations of each device are possible since the controller can be placed on either the A or B port and can still control the enable pin.

9.3.3 Balanced High-Drive CMOS Push-Pull Outputs

A balanced output allows the device to sink and source similar currents. The high drive capability of this device creates fast edges into light loads, so routing and load conditions should be considered to prevent ringing. Additionally, the outputs of this device are capable of driving larger currents than the device can sustain without being damaged. *Absolute Maximum Ratings* defines the electrical and thermal limits that must be followed at all times.

9.3.4 Partial Power Down (I_{off})

The inputs and outputs for this device enter a high-impedance state when the device is powered down, inhibiting current backflow into the device. The I_{off} in the *Electrical Characteristics* specifies the maximum leakage into or out of any input or output pin on the device.

9.3.5 VCC Isolation and V_{CC} Disconnect

The outputs for this device are disabled and enter a high-impedance state when either supply is <100 mV or left floating (disconnected), with the complementary supply within recommended operating conditions. It is recommended that the inputs are kept low before floating (disconnecting) either supply.

The $I_{CCx(floating)}$ in the *Electrical Characteristics* specifies the maximum supply current. The $I_{off(float)}$ in the *Electrical Characteristics* specifies the maximum leakage into or out of any input or output pin on the device.

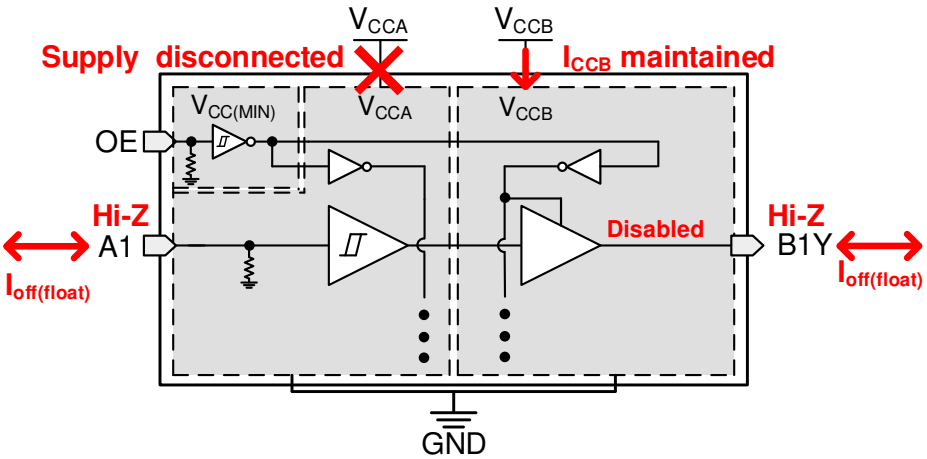

图 9-1. V_{CC} Disconnect Feature

9.3.6 Over-Voltage Tolerant Inputs

Input signals to this device can be driven above the supply voltage so long as they remain below the maximum input voltage value specified in the *Recommended Operating Conditions*.

9.3.7 Glitch-Free Power Supply Sequencing

Either supply rail may be powered on or off in any order without producing a glitch on the inputs or outputs (that is, where the output erroneously transitions to VCC when it should be held low or vice versa). Glitches of this nature can be misinterpreted by a peripheral as a valid data bit, which could trigger a false device reset of the peripheral, a false device configuration of the peripheral, or even a false data initialization by the peripheral.

Copyright © 2022 Texas Instruments Incorporated

9.3.8 Negative Clamping Diodes

图 9-2 depicts the inputs and outputs to this device that have negative clamping diodes.

CAUTION

Voltages beyond the values specified in the *Absoulte Maximum Ratings* table can cause damage to the device. The input negative-voltage and output voltage ratings may be exceeded if the input and output clamp-current ratings are observed.

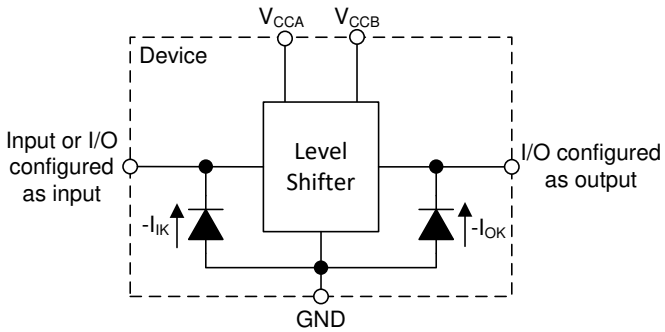

图 9-2. Electrical Placement of Clamping Diodes for Each Input and Output

9.3.9 Fully Configurable Dual-Rail Design

The V_{CCA} and V_{CCB} pins can be supplied at any voltage from 1.1 V to 5.5 V, making the device suitable for translating between any of the voltage nodes (1.2 V, 1.5 V, 1.8 V, 3.3 V, and 5.0 V).

9.3.10 Supports High-Speed Translation

The TXU0104-Q1 device can support high data-rate applications. The translated signal data rate can be up to 200 Mbps when the signal is translated from 3.3 V to 5.0 V.

9.3.11 Wettable Flanks

This device includes wettable flanks for at least one package. See the *Features* section on the front page of the data sheet for which packages include this feature.

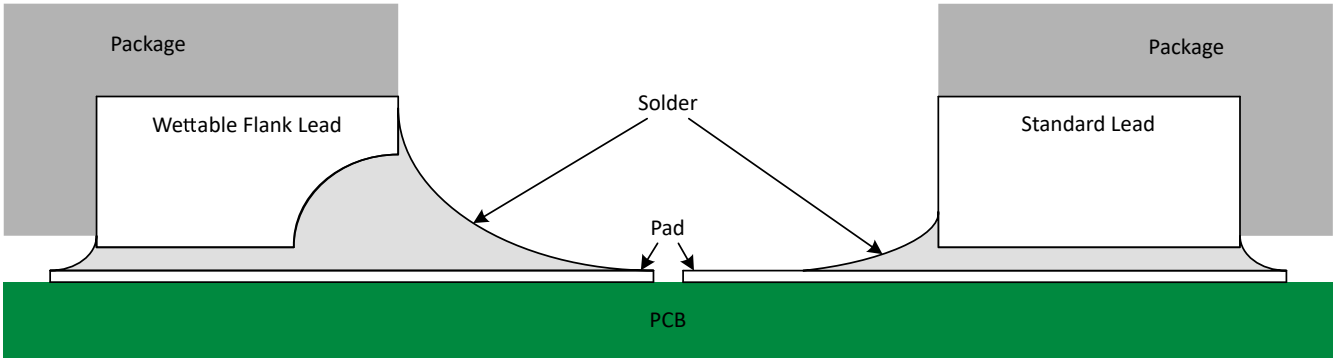

图 9-3. Simplified Cutaway View of Wettable-Flank QFN Package and Standard QFN Package After Soldering

Wettable flanks help improve side wetting after soldering, which makes QFN packages easier to inspect with automatic optical inspection (AOI). A wettable flank can be dimpled or step-cut to provide additional surface area for solder adhesion which assists in reliably creating a side fillet as shown in 图 9-3. Please see the mechanical drawing for additional details.

9.4 Device Functional Modes

表 9-1. Function Table

CONTROL INPUTS	Port Status		OPERATION
OE	Input	Output	
H	L	L	Unidirectional non-inverting voltage translation
H	H	H	Unidirectional non-inverting voltage translation
L	X	Hi-Z	Isolation

Copyright © 2022 Texas Instruments Incorporated

10 Application and Implementation

备注

以下应用部分中的信息不属于 TI 器件规格的范围，TI 不担保其准确性和完整性。TI 的客 户应负责确定器件是否适用于其应用。客户应验证并测试其设计，以确保系统功能。

10.1 Application Information

The TXU0104-Q1 device can be used in level-translation applications for interfacing devices or systems operating at different interface voltages with one another. The TXU0104-Q1 device is ideal for use in applications where a push-pull driver is connected to the data Inputs. The maximum data rate can be up to 200 Mbps when the device translates a signal from 3.3 V to 5.0 V.

10.2 Typical Application

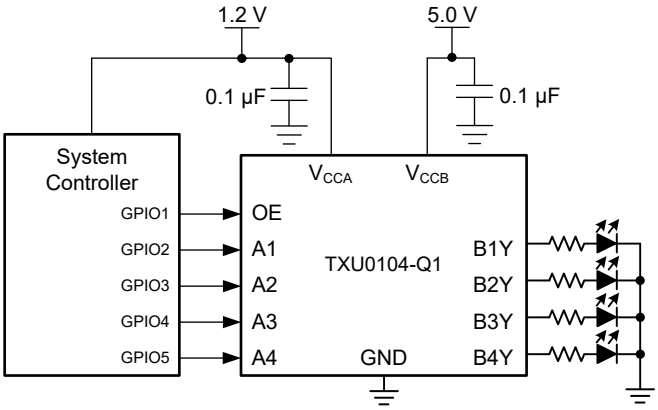

图 10-1. TXU0104-Q1 LED Driver Application

10.2.1 Design Requirements

Use the parameters listed in 表 10-1 for this design example.

表 10-1. Design Parameters

DESIGN PARAMETERS	EXAMPLE VALUES
Input voltage range	1.1 V to 5.5 V
Output voltage range	1.1 V to 5.5 V

10.2.2 Detailed Design Procedure

To begin the design process, determine the following:

- Input voltage range
  - Use the supply voltage of the device that is driving the TXU0104-Q1 device to determine the input voltage range. For a valid logic-high, the value must exceed the positive-going input-threshold voltage (V_{T+}) of the input port. For a valid logic low the value must be less than the negative-going input-threshold voltage (V_{T-}) of the input port.
- Output voltage range
  - Use the supply voltage of the device that the TXU0104-Q1 device is driving to determine the output voltage range.

10.2.3 Application Curve

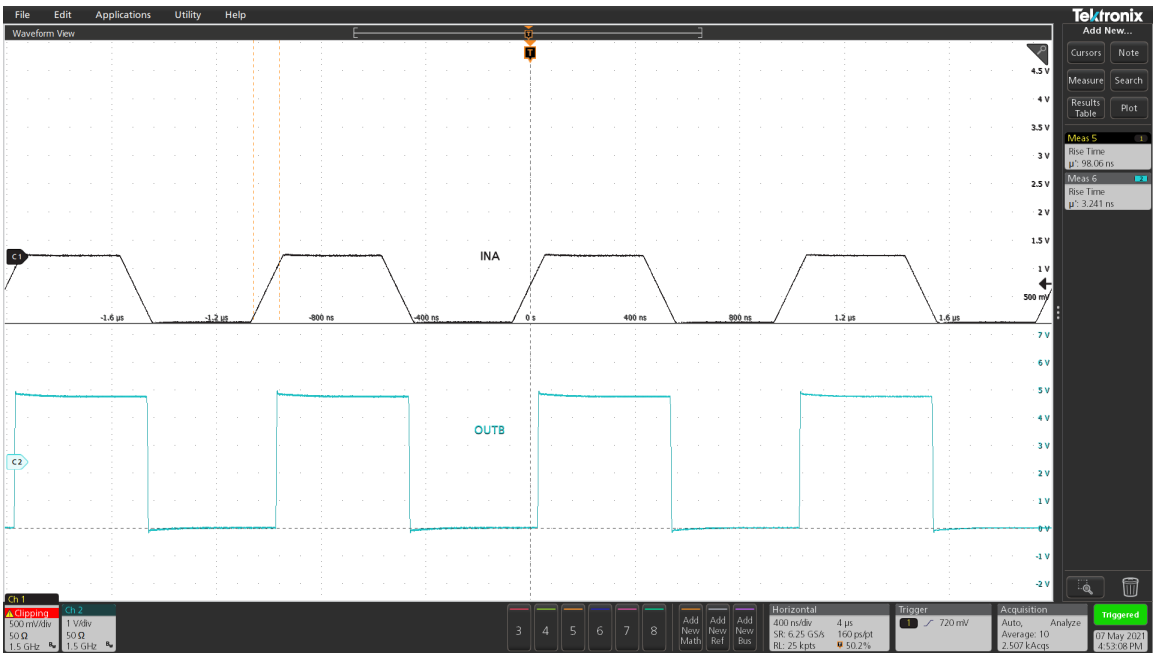

图 10-2. Up Translation at 1 MHz (1.2 V to 5 V)

11 Power Supply Recommendations

Always apply a ground reference to the GND pins first. This device is designed for glitch free power sequencing without any supply sequencing requirements such as ramp order or ramp rate.

Glitch-Free Power Supply Sequencing describes how this device was designed with various power supply sequencing methods in mind to help prevent unintended triggering of downstream devices.

Copyright © 2022 Texas Instruments Incorporated

12 Layout

12.1 Layout Guidelines

To ensure reliability of the device, it is recommended to follow common printed-circuit board layout guidelines:

- Use bypass capacitors on the power supply pins and place them as close to the device as possible. A 0.1 µF capacitor is recommended, but transient performance can be improved by having 1 µF and 0.1 µF capacitors in parallel as bypass capacitors.
- The high drive capability of this device creates fast edges into light loads, so routing and load conditions should be considered to prevent ringing.

12.2 Layout Example

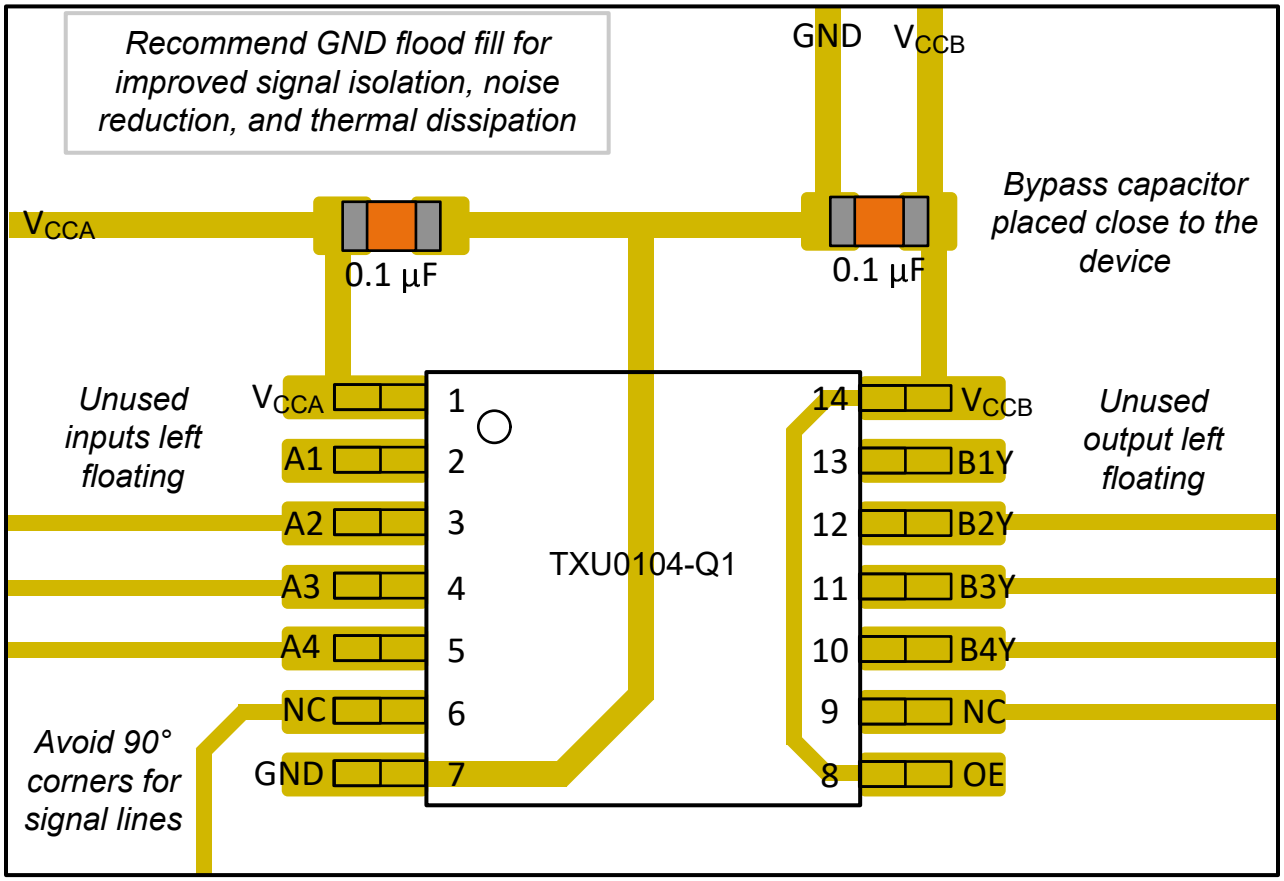

图 12-1. Layout Example – TXU0104-Q1

13 Device and Documentation Support

13.1 Device Support

13.1.1 Regulatory Requirements

No statutory or regulatory requirements apply to this device.

There are no special characteristics for this product.

13.2 Documentation Support

13.2.1 Related Documentation

- Texas Instruments, *Understanding Schmitt Triggers* application report
- Texas Instruments, *CMOS Power Consumption and C_{pd} Calculation* application report

13.3 接收文档更新通知

要接收文档更新通知，请导航至 ti.com 上的器件产品文件夹。点击*订阅更新* 进行注册，即可每周接收产品信息更改摘要。有关更改的详细信息，请查看任何已修订文档中包含的修订历史记录。

13.4 支持资源

TI E2E™ 支持论坛是工程师的重要参考资料，可直接从专家获得快速、经过验证的解答和设计帮助。搜索现有解答或提出自己的问题可获得所需的快速设计帮助。

链接的内容由各个贡献者“按原样”提供。这些内容并不构成 TI 技术规范，并且不一定反映 TI 的观点；请参阅 TI 的《使用条款》。

13.5 Trademarks

TI E2E™ is a trademark of Texas Instruments.
所有商标均为其各自所有者的财产。

13.6 Electrostatic Discharge Caution

This integrated circuit can be damaged by ESD. Texas Instruments recommends that all integrated circuits be handled with appropriate precautions. Failure to observe proper handling and installation procedures can cause damage.

ESD damage can range from subtle performance degradation to complete device failure. Precision integrated circuits may be more susceptible to damage because very small parametric changes could cause the device not to meet its published specifications.

13.7 术语表

TI 术语表	本术语表列出并解释了术语、首字母缩略词和定义。

14 Mechanical, Packaging, and Orderable Information

The following pages include mechanical, packaging, and orderable information. This information is the most current data available for the designated devices. This data is subject to change without notice and revision of this document. For browser-based versions of this data sheet, refer to the left-hand navigation.

Copyright © 2022 Texas Instruments Incorporated

PACKAGING INFORMATION

Orderable part number	Status (1)	Material type (2)	Package | Pins	Package qty | Carrier	RoHS (3)	Lead finish/ Ball material (4)	MSL rating/ Peak reflow (5)	Op temp (°C)	Part marking (6)
TXU0104QPWRQ1	Active	Production	TSSOP (PW) | 14	2000 | LARGE T&R	Yes	NIPDAU | SN	Level-1-260C-UNLIM	-40 to 125	TXU104Q
TXU0104QPWRQ1.A	Active	Production	TSSOP (PW) | 14	2000 | LARGE T&R	Yes	NIPDAU	Level-1-260C-UNLIM	-40 to 125	TXU104Q
TXU0104QWBQARQ1	Active	Production	WQFN (BQA) | 14	3000 | LARGE T&R	Yes	NIPDAU	Level-1-260C-UNLIM	-40 to 125	TX0104
TXU0104QWBQARQ1.A	Active	Production	WQFN (BQA) | 14	3000 | LARGE T&R	Yes	NIPDAU	Level-1-260C-UNLIM	-40 to 125	TX0104

(1) **Status:** For more details on status, see our product life cycle.

(2) **Material type:** When designated, preproduction parts are prototypes/experimental devices, and are not yet approved or released for full production. Testing and final process, including without limitation quality assurance, reliability performance testing, and/or process qualification, may not yet be complete, and this item is subject to further changes or possible discontinuation. If available for ordering, purchases will be subject to an additional waiver at checkout, and are intended for early internal evaluation purposes only. These items are sold without warranties of any kind.

(3) **RoHS values:** Yes, No, RoHS Exempt. See the TI RoHS Statement for additional information and value definition.

(4) **Lead finish/Ball material:** Parts may have multiple material finish options. Finish options are separated by a vertical ruled line. Lead finish/Ball material values may wrap to two lines if the finish value exceeds the maximum column width.

(5) **MSL rating/Peak reflow:** The moisture sensitivity level ratings and peak solder (reflow) temperatures. In the event that a part has multiple moisture sensitivity ratings, only the lowest level per JEDEC standards is shown. Refer to the shipping label for the actual reflow temperature that will be used to mount the part to the printed circuit board.

(6) **Part marking:** There may be an additional marking, which relates to the logo, the lot trace code information, or the environmental category of the part.

Multiple part markings will be inside parentheses. Only one part marking contained in parentheses and separated by a "~" will appear on a part. If a line is indented then it is a continuation of the previous line and the two combined represent the entire part marking for that device.

Important Information and Disclaimer: The information provided on this page represents TI's knowledge and belief as of the date that it is provided. TI bases its knowledge and belief on information provided by third parties, and makes no representation or warranty as to the accuracy of such information. Efforts are underway to better integrate information from third parties. TI has taken and continues to take reasonable steps to provide representative and accurate information but may not have conducted destructive testing or chemical analysis on incoming materials and chemicals. TI and TI suppliers consider certain information to be proprietary, and thus CAS numbers and other limited information may not be available for release.

In no event shall TI's liability arising out of such information exceed the total purchase price of the TI part(s) at issue in this document sold by TI to Customer on an annual basis.

OTHER QUALIFIED VERSIONS OF TXU0104-Q1 :

- Catalog : TXU0104

NOTE: Qualified Version Definitions:

- Catalog - TI's standard catalog product

TAPE AND REEL INFORMATION

REEL DIMENSIONS

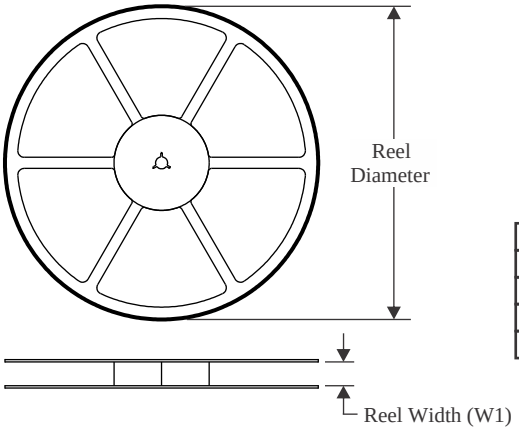

TAPE DIMENSIONS

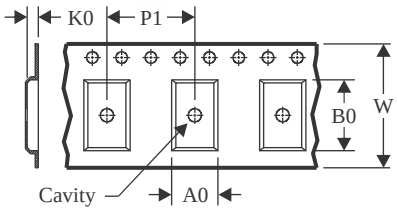

A0	Dimension designed to accommodate the component width
B0	Dimension designed to accommodate the component length
K0	Dimension designed to accommodate the component thickness
W	Overall width of the carrier tape
P1	Pitch between successive cavity centers

QUADRANT ASSIGNMENTS FOR PIN 1 ORIENTATION IN TAPE

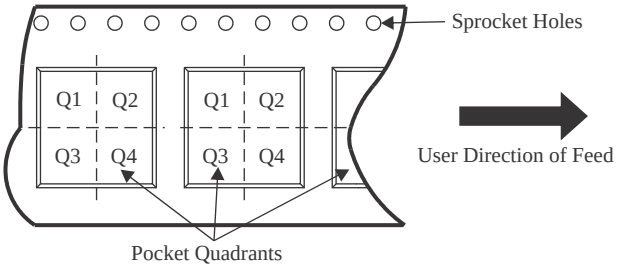

*All dimensions are nominal

Device	Package Type	Package Drawing	Pins	SPQ	Reel Diameter (mm)	Reel Width W1 (mm)	A0 (mm)	B0 (mm)	K0 (mm)	P1 (mm)	W (mm)	Pin1 Quadrant
TXU0104QPWRQ1	TSSOP	PW	14	2000	330.0	12.4	6.9	5.6	1.6	8.0	12.0	Q1
TXU0104QWBQARQ1	WQFN	BQA	14	3000	180.0	12.4	2.8	3.3	1.1	4.0	12.0	Q1

TAPE AND REEL BOX DIMENSIONS

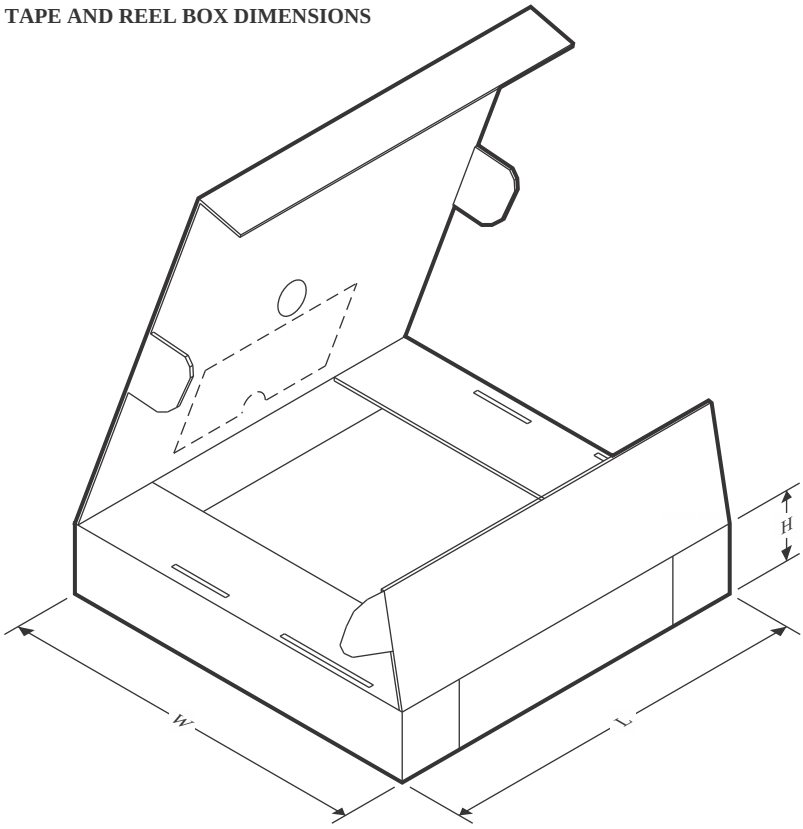

*All dimensions are nominal

Device	Package Type	Package Drawing	Pins	SPQ	Length (mm)	Width (mm)	Height (mm)
TXU0104QPWRQ1	TSSOP	PW	14	2000	353.0	353.0	32.0
TXU0104QWBQARQ1	WQFN	BQA	14	3000	210.0	185.0	35.0

GENERIC PACKAGE VIEW

BQA 14

WQFN - 0.8 mm max height

2.5 x 3, 0.5 mm pitch

PLASTIC QUAD FLATPACK - NO LEAD

This image is a representation of the package family, actual package may vary.
Refer to the product data sheet for package details.

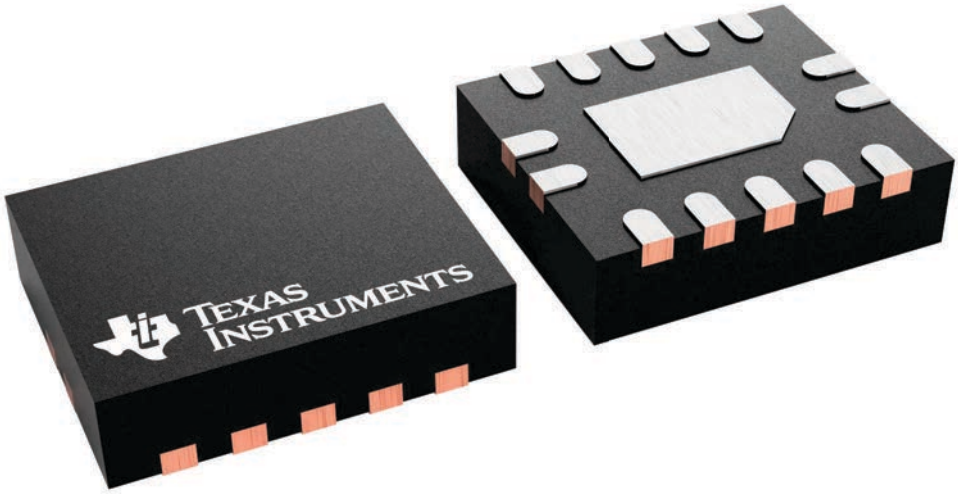

4227145/A

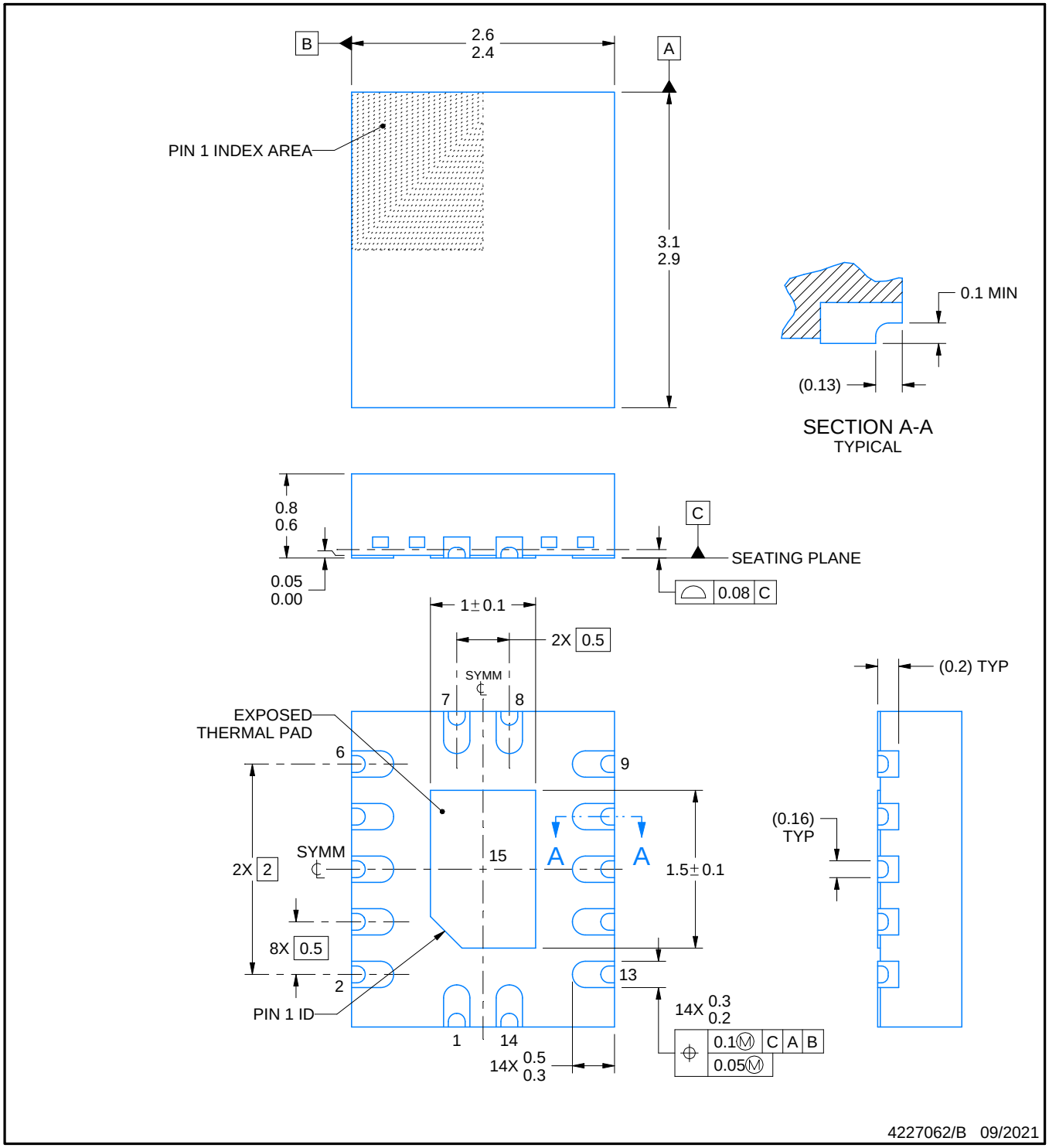

NOTES:

1. All linear dimensions are in millimeters. Any dimensions in parenthesis are for reference only. Dimensioning and tolerancing per ASME Y14.5M.
2. This drawing is subject to change without notice.
3. The package thermal pad must be soldered to the printed circuit board for thermal and mechanical performance.

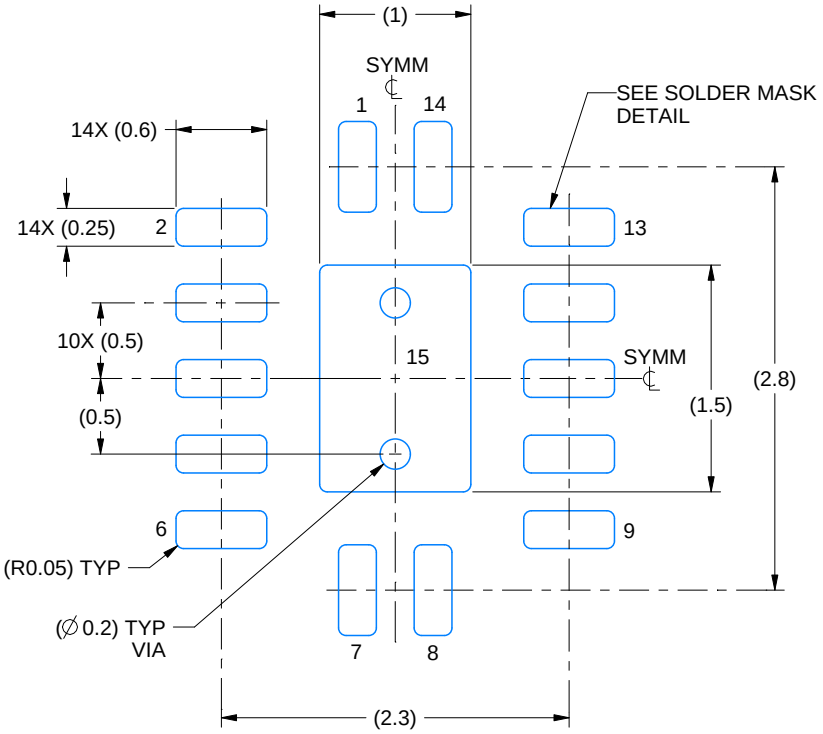

LAND PATTERN EXAMPLE
EXPOSED METAL SHOWN
SCALE: 20X

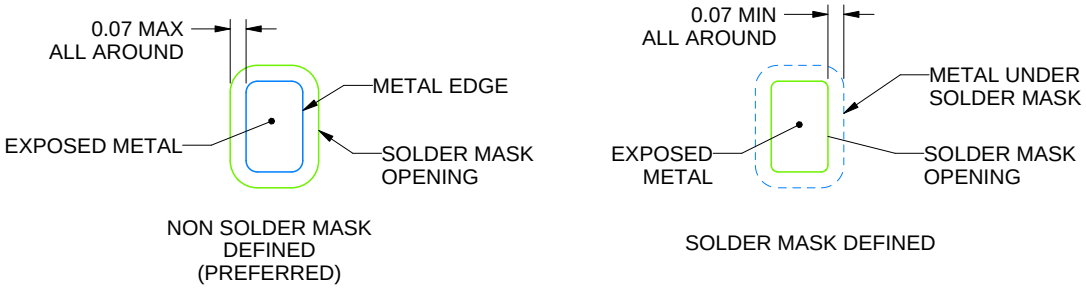

SOLDER MASK DETAILS

4227062/B 09/2021

NOTES: (continued)

4. This package is designed to be soldered to a thermal pad on the board. For more information, see Texas Instruments literature number SLUA271 (www.ti.com/lit/slua271).
5. Vias are optional depending on application, refer to device data sheet. If any vias are implemented, refer to their locations shown on this view. It is recommended that vias under paste be filled, plugged or tented.

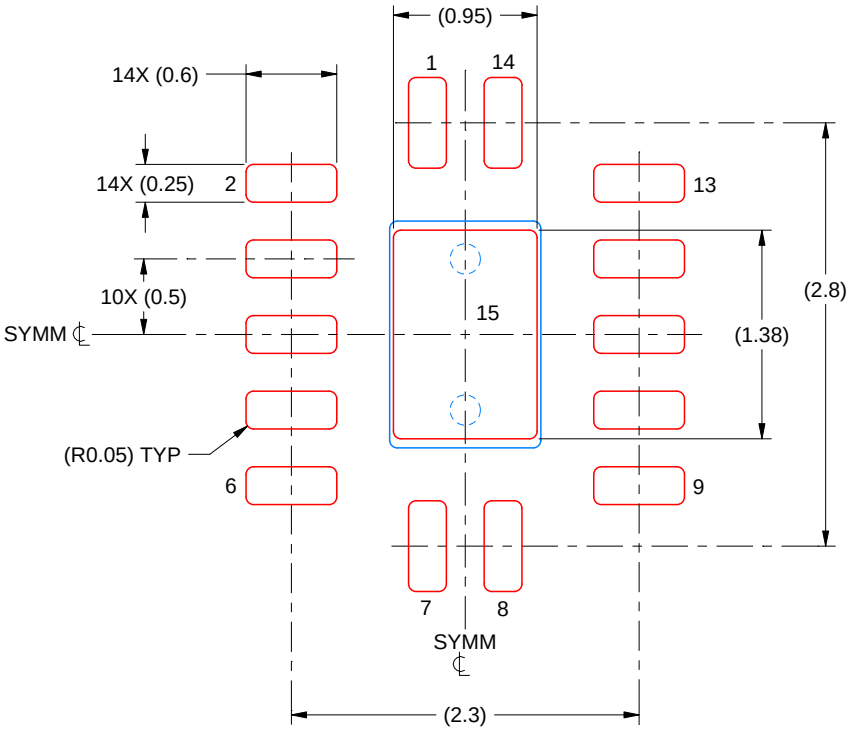

SOLDER PASTE EXAMPLE
BASED ON 0.125 MM THICK STENCIL
SCALE: 20X

EXPOSED PAD 15
87% PRINTED SOLDER COVERAGE BY AREA UNDER PACKAGE

4227062/B 09/2021

NOTES: (continued)

6. Laser cutting apertures with trapezoidal walls and rounded corners may offer better paste release. IPC-7525 may have alternate design recommendations.

PW0014A

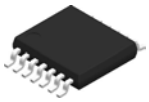

PACKAGE OUTLINE

TSSOP - 1.2 mm max height

SMALL OUTLINE PACKAGE

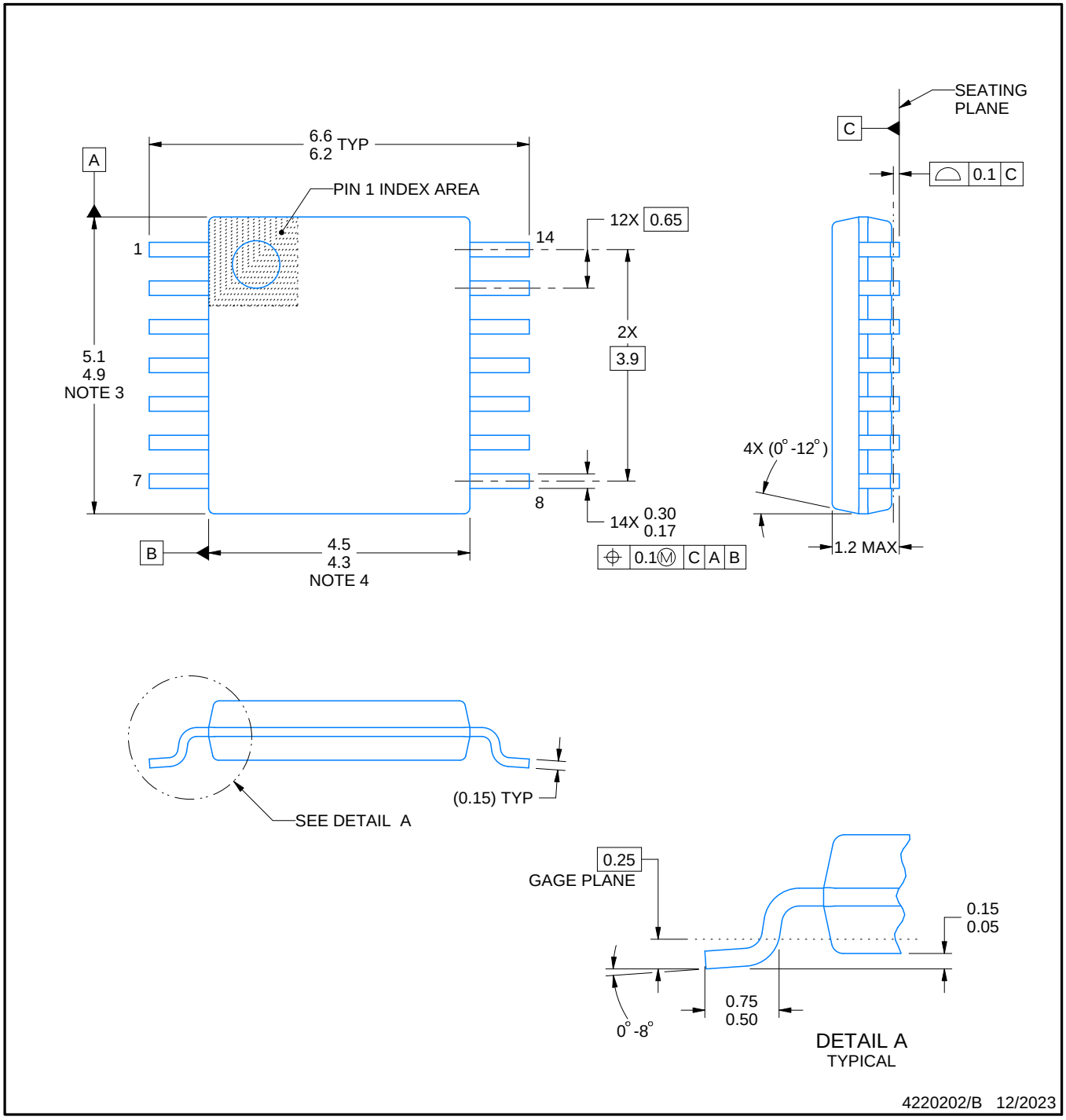

NOTES:

1. All linear dimensions are in millimeters. Any dimensions in parenthesis are for reference only. Dimensioning and tolerancing per ASME Y14.5M.
2. This drawing is subject to change without notice.
3. This dimension does not include mold flash, protrusions, or gate burrs. Mold flash, protrusions, or gate burrs shall not exceed 0.15 mm per side.
4. This dimension does not include interlead flash. Interlead flash shall not exceed 0.25 mm per side.
5. Reference JEDEC registration MO-153.

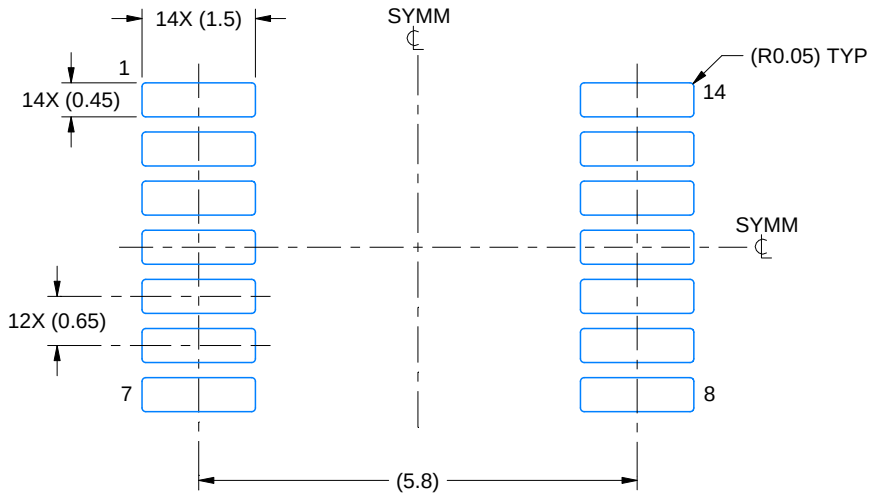

LAND PATTERN EXAMPLE
EXPOSED METAL SHOWN
SCALE: 10X

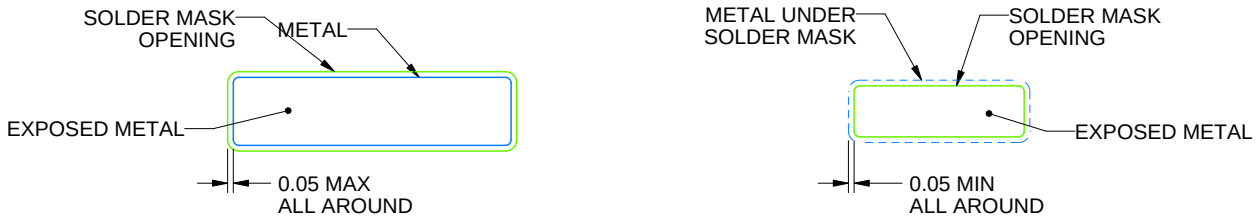

NON-SOLDER MASK DEFINED (PREFERRED)

SOLDER MASK DEFINED

SOLDER MASK DETAILS

4220202/B 12/2023

NOTES: (continued)

6. Publication IPC-7351 may have alternate designs.
7. Solder mask tolerances between and around signal pads can vary based on board fabrication site.

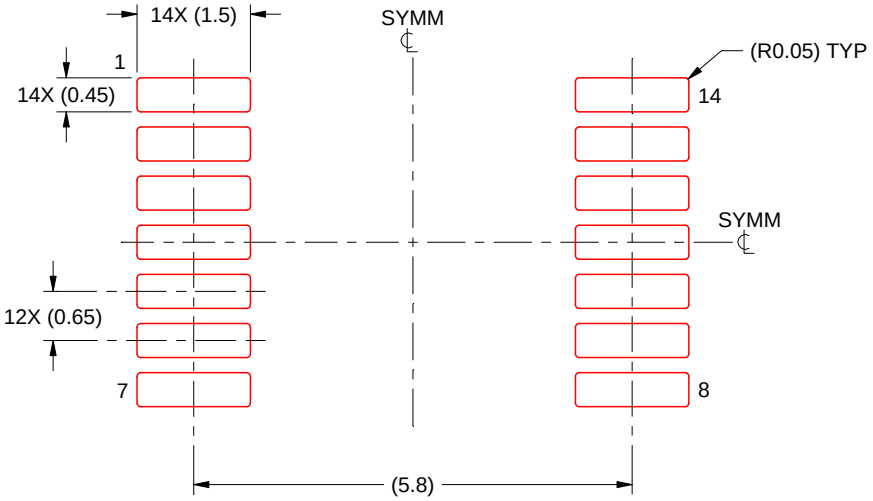

SOLDER PASTE EXAMPLE
BASED ON 0.125 mm THICK STENCIL
SCALE: 10X

4220202/B 12/2023

NOTES: (continued)

8. Laser cutting apertures with trapezoidal walls and rounded corners may offer better paste release. IPC-7525 may have alternate design recommendations.
9. Board assembly site may have different recommendations for stencil design.

重要通知和免责声明

TI“按原样”提供技术和可靠性数据（包括数据表）、设计资源（包括参考设计）、应用或其他设计建议、网络工具、安全信息和其他资源，不保证没有瑕疵且不做出任何明示或暗示的担保，包括但不限于对适销性、与某特定用途的适用性或不侵犯任何第三方知识产权的暗示担保。

这些资源可供使用 TI 产品进行设计的熟练开发人员使用。您将自行承担以下全部责任：(1) 针对您的应用选择合适的 TI 产品，(2) 设计、验证并测试您的应用，(3) 确保您的应用满足相应标准以及任何其他安全、安保法规或其他要求。

这些资源如有变更，恕不另行通知。TI 授权您仅可将这些资源用于研发本资源所述的 TI 产品的相关应用。严禁以其他方式对这些资源进行复制或展示。您无权使用任何其他 TI 知识产权或任何第三方知识产权。对于因您对这些资源的使用而对 TI 及其代表造成的任何索赔、损害、成本、损失和债务，您将全额赔偿，TI 对此概不负责。

TI 提供的产品受 TI 销售条款)、TI 通用质量指南 或 ti.com 上其他适用条款或 TI 产品随附的其他适用条款的约束。TI 提供这些资源并不会扩展或以其他方式更改 TI 针对 TI 产品发布的适用的担保或担保免责声明。 除非德州仪器 (TI) 明确将某产品指定为定制产品或客户特定产品，否则其产品均为按确定价格收入目录的标准通用器件。

TI 反对并拒绝您可能提出的任何其他或不同的条款。

版权所有 © 2026，德州仪器 (TI) 公司

最后更新日期：2025 年 10 月