TS5A2066 双通道 10Ω SPST 模拟开关

1 特性

- 低导通状态电阻 (10Ω)
- 控制输入可承受 5V 电压
- 低电荷注入
- 出色的通态电阻匹配
- 低总谐波失真 (THD)
- 1.65V 至 5.5V 单电源运行
- 闩锁性能超过 100mA，符合 JESD 78 II 类规范
- 静电放电 (ESD) 性能测试符合 JESD 22 规范
  - 2000V 人体放电模式（A114-B，II 类）
  - 1000V 充电器件模型 (C101)

2 应用

- 采样和保持电路
- 电池供电类设备
- 音频和视频信号路由
- 通信电路
- 手机
- 低电压数据采集系统
- PDA

3 说明

TS5A2066 器件是一款双通道单刀单掷 (SPST) 模拟开关，其设计工作电压为 1.65V 至 5.5V。此器件可以处理数据和模拟信号，并且高达 V_{CC} 的信号可在任一方向上传输。

器件信息(1)

器件型号	封装	封装尺寸（标称值）
TS5A2066	SSOP (DCT)	2.95mm x 2.80mm
	VSSOP (DCU)	2.30mm x 2.00mm
	DSBGA (YZP)	1.25mm x 2.25mm

(1) 如需了解所有可用封装，请参阅数据表末尾的可订购产品附录。

功能方框图

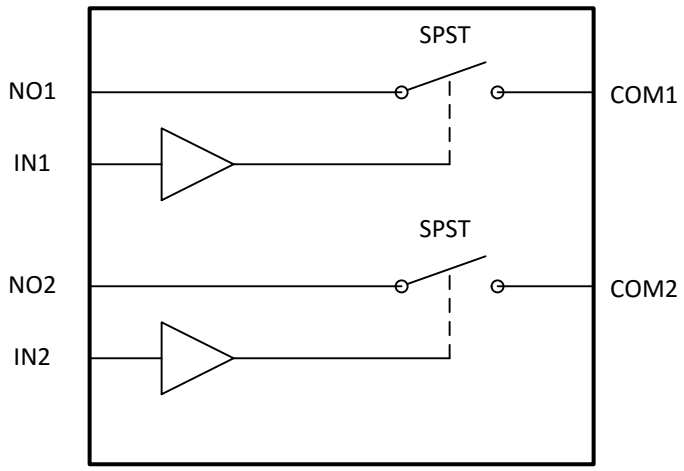

本文档旨在为方便起见，提供有关 TI 产品中文版本的信息，以确认产品的概要。 有关适用的官方英文版本的最新信息，请访问 www.ti.com，其内容始终优先。 TI 不保证翻译的准确性和有效性。 在实际设计之前，请务必参考最新版本的英文版本。

目录

1 特性 ... 1
2 应用 ... 1
3 说明 ... 1
4 修订历史记录 ... 2
5 **Pin Configuration and Functions** ... 3
6 **Specifications** ... 4
6.1 Absolute Maximum Ratings ... 4
6.2 ESD Ratings ... 4
6.3 Recommended Operating Conditions ... 4
6.4 Thermal Information ... 4
6.5 Electrical Characteristics For 5-V Supply ... 5
6.6 Electrical Characteristics For 3.3-V Supply ... 7
6.7 Electrical Characteristics For 2.5-V Supply ... 9
6.8 Electrical Characteristics For 1.8-V Supply ... 11
6.9 Typical Performance ... 13
7 **Parameter Measurement Information** ... 16
8 **Detailed Description** ... 21
8.1 Overview ... 21
8.2 Functional Block Diagram ... 21
8.3 Feature Description ... 21
8.4 Device Functional Modes ... 21
9 **Application and Implementation** ... 22
9.1 Application Information ... 22
9.2 Typical Application ... 22
10 **Power Supply Recommendations** ... 23
11 **Layout** ... 24
11.1 Layout Guidelines ... 24
11.2 Layout Example ... 24
12 器件和文档支持 ... 25
12.1 接收文档更新通知 ... 25
12.2 社区资源 ... 25
12.3 商标 ... 25
12.4 静电放电警告 ... 25
12.5 术语表 ... 25
13 机械、封装和可订购信息 ... 25

4 修订历史记录

注：之前版本的页码可能与当前版本有所不同。

Changes from Revision E (June 2017) to Revision F — **Page**

- Changed the YZP Package From: Top View To: Bottom View ... 3

Changes from Revision D (April 2010) to Revision E — **Page**

- 添加了*器件信息* 表、*引脚配置和功能* 部分、*ESD 额定值* 表、*建议运行条件* 表、*热性能信息* 表、*特性 说明* 部分、*器件功能模式*、*应用和实施* 部分、*电源建议* 部分、*布局* 部分、*器件和文档支持* 部分以及*机械、封装和可订购信息* 部分 ... 1
- Deleted the *Summary of Characteristics* table ... 3
- Changed pin 8 From: V_+ To: V_{CC} in the pinout images ... 3
- Deleted the ON-state resistance Min values of 10 Ω and 12 Ω in the *Electrical Characteristics For 3.3-V Suppy* table ... 7
- Deleted the ON-state resistance Min values of 20 Ω in the *Electrical Characteristics For 2.5-V Supply* table ... 9
- Changed Test Conditions for Charge injection From: See Figure 23 To; See Figure 24 in the *Electrical Characteristics For 2.5-V Supply* table ... 10
- Deleted the ON-state resistance Min values of 80 Ω and 90 Ω in the *Electrical Characteristics For 1.8-V Supply* table ... 11
- Changed V_+ to V_{CC} in the *Typical Performance* graphs ... 13
- Changed V_+ to V_{CC} in the *Parameter Measurement Information* images ... 16

Copyright © 2005–2018, Texas Instruments Incorporated

5 Pin Configuration and Functions

DCT or DCU Package
8 Pin (SSOP or VSSOP)
Top View

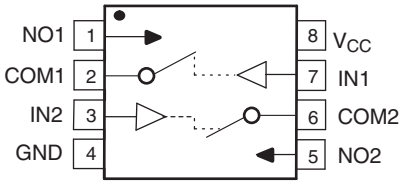

YZP Package
8 Pin (DSBGA)
Bottom View

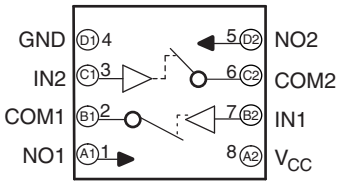

Pin Functions

NO.	NAME	DESCRIPTION
1	NO1	Normally open
2	COM1	Common
3	IN2	Digital control to connect COM to NO
4	GND	Digital ground
5	NO2	Normally open
6	COM2	Common
7	IN1	Digital control to connect COM to NO
8	V_{CC}	Power supply

Copyright © 2005–2018, Texas Instruments Incorporated

6 Specifications

6.1 Absolute Maximum Ratings[(1)(2)]

over operating free-air temperature range (unless otherwise noted)

			MIN	MAX	UNIT
V_{CC}	Supply voltage range[(3)]		–0.5	6.5	V
V_{NO} V_{COM}	Analog voltage range[(3)(4)(5)]		–0.5	V_{CC} + 0.5	V
I_K	Analog port diode current	V_{NO}, V_{COM} < 0 or V_{NO}, V_{COM} > V_{CC}	–50	50	mA
I_{NO} I_{COM}	On-state switch current	V_{NO}, V_{COM} = 0 to V_{CC}	–50	50	mA
V_{IN}	Digital input voltage range[(3)(4)]		–0.5	6.5	V
I_{IK}	Digital input clamp current	V_{IN} < 0	–50		mA
I_{CC}	Continuous current through V_{CC}			100	mA
I_{GND}	Continuous current through GND		–100	100	mA
T_{stg}	Storage temperature range		–65	150	°C

(1) Stresses beyond those listed under "absolute maximum ratings" may cause permanent damage to the device. These are stress ratings only, and functional operation of the device at these or any other conditions beyond those indicated under "recommended operating conditions" is not implied. Exposure to absolute-maximum-rated conditions for extended periods may affect device reliability.
(2) The algebraic convention, whereby the most negative value is a minimum and the most positive value is a maximum.
(3) All voltages are with respect to ground, unless otherwise specified.
(4) The input and output voltage ratings may be exceeded if the input and output clamp-current ratings are observed.
(5) This value is limited to 5.5 V maximum.

6.2 ESD Ratings

			VALUE	UNIT
$V_{(ESD)}$	Electrostatic discharge	Human-body model (HBM), per ANSI/ESDA/JEDEC JS-001[(1)]	±2000	V
		Charged-device model (CDM), per JEDEC specification JESD22-C101[(2)]	±1000	

(1) JEDEC document JEP155 states that 500-V HBM allows safe manufacturing with a standard ESD control process.
(2) JEDEC document JEP157 states that 250-V CDM allows safe manufacturing with a standard ESD control process. .

6.3 Recommended Operating Conditions

over operating free-air temperature range (unless otherwise noted)

		MIN	MAX	UNIT
V_{CC}	Supply voltage range	1.65	5.5	V
V_{NO} V_{COM}	Analog voltage range	0	V_{CC}	V
V_{IN}	Digital input voltage range	0	5.5	V

6.4 Thermal Information

THERMAL METRIC[(1)]		TS5A2066			UNIT
		DCT (SSOP)	DCU (VSSOP)	YZP (DSBGA)	
		8 PINS	8 PINS	8 PINS	
$R_{\theta JA}$	Junction-to-ambient thermal resistance	214.1	212.8	99.8	°C/W
$R_{\theta JC(top)}$	Junction-to-case (top) thermal resistance	106.8	93.6	1.0	°C/W
$R_{\theta JB}$	Junction-to-board thermal resistance	127.8	133.6	29.6	°C/W
ψ_{JT}	Junction-to-top characterization parameter	30.2	30.4	0.5	°C/W
ψ_{JB}	Junction-to-board characterization parameter	125.5	133.1	29.8	°C/W

(1) For more information about traditional and new thermal metrics, see the *Semiconductor and IC Package Thermal Metrics* application report.

Copyright © 2005–2018, Texas Instruments Incorporated

6.5 Electrical Characteristics For 5-V Supply(1)

V_{CC} = 4.5 V to 5.5 V, T_A = –40°C to 85°C (unless otherwise noted)

PARAMETER	SYMBOL	TEST CONDITIONS		T_A	V_{CC}	MIN	TYP	MAX	UNIT
Analog Switch									
Analog signal range	V_{COM}, V_{NO}					0		V_{CC}	V
ON-state resistance	r_{on}	0 ≤ V_{NO} ≤ V_{CC}, I_{COM} = –32 mA,	Switch ON, See Figure 16	25°C	4.5 V		7.5	10	Ω
				Full				15	
ON-state resistance match between channels	Δr_{on}	V_{NO} = 3.15 V, I_{COM} = –32 mA,	Switch ON, SeeFigure 16	25°C	4.5 V		0.4	1	Ω
				Full				3	
ON-state resistance flatness	$r_{on(flat)}$	0 ≤ V_{NO} ≤ V_{CC}, I_{COM} = –32 mA,	Switch ON, See Figure 16	25°C	4.5 V		3.5	5	Ω
				Full				8	
NO OFF leakage current	$I_{NO(OFF)}$	V_{NO} = 1 V, V_{COM} = 4.5 V, or V_{NO} = 4.5 V, V_{COM} = 1 V,	Switch OFF, See Figure 17	25°C	5.5 V	–30	–10	30	nA
				Full		–40		40	
COM OFF leakage current	$I_{COM(OFF)}$	V_{COM} = 1 V, V_{NO} = 4.5 V, or V_{COM} = 4.5 V, V_{NO} = 1 V,	Switch OFF, See Figure 17	25°C	5.5 V	–50	–8	50	nA
				Full		–50		50	
NO ON leakage current	$I_{NO(ON)}$	V_{NO} = 1 V, V_{COM} = Open, or V_{NO} = 4.5 V, V_{COM} = Open	Switch ON, See Figure 18	25°C	5.5 V	–40	–12	40	nA
				Full		–4		40	
COM ON leakage current	$I_{COM(ON)}$	V_{COM} = 1 V, V_{NO} = Open, or V_{COM} = 4.5 V, V_{NO} = Open,	Switch ON, See Figure 18	25°C	5.5 V	–70	–30	70	nA
				Full		–70		70	
Digital Control Input (IN)									
Input logic high	V_{IH}			Full		V_{CC} × 0.7		5.5	V
Input logic low	V_{IL}			Full		0		V_{CC} × 0.3	V
Input leakage current	I_{IH}, I_{IL}	V_{IN} = 5.5 V or 0		25°C	5.5 V	–0.1	0.05	0.1	µA
				Full		–1		1	

(1) The algebraic convention, whereby the most negative value is a minimum and the most positive value is a maximum.

Copyright © 2005–2018, Texas Instruments Incorporated

Electrical Characteristics For 5-V Supply[(1)] (continued)

V_{CC} = 4.5 V to 5.5 V, T_A = –40°C to 85°C (unless otherwise noted)

PARAMETER	SYMBOL	TEST CONDITIONS		T_A	V_{CC}	MIN	TYP	MAX	UNIT
Dynamic									
Turn-on time	t_{ON}	V_{COM} = 3 V, R_L = 300 Ω,	C_L = 35 pF, See Figure 20	25°C	5 V	4.4	5.2	5.8	ns
				Full	4.5 V to 5.5 V	3.4		6.1	
Turn-off time	t_{OFF}	V_{COM} = 3 V, R_L = 300 Ω,	C_L = 35 pF, See Figure 20	25°C	5 V	1.7	2.6	3.6	ns
				Full	4.5 V to 5.5 V	1.3		4.2	
Charge injection	Q_C	V_{GEN} = 0, R_{GEN} = 0,	C_L = 0.1 nF, See Figure 24	25°C	5 V		1		pC
NO OFF capacitance	$C_{NO(OFF)}$	V_{NO} = V_{CC} or GND,	Switch OFF, See Figure 19	25°C	5 V		5.5		pF
COM OFF capacitance	$C_{COM(OFF)}$	V_{COM} = V_{CC} or GND,	Switch OFF, See Figure 19	25°C	5 V		5.5		pF
NO ON capacitance	$C_{NO(ON)}$	V_{NO} = V_{CC} or GND,	Switch ON, See Figure 19	25°C	5 V		13.5		pF
COM ON capacitance	$C_{COM(ON)}$	V_{COM} = V_{CC} or GND,	Switch ON, See Figure 19	25°C	5 V		13.5		pF
Digital input capacitance	C_{IN}	V_{IN} = V_{CC} or GND,	See Figure 19	25°C	5 V		2.5		pF
Bandwidth	BW	R_L = 50 Ω,	Switch ON, See Figure 21	25°C	5 V		300		MHz
OFF isolation	O_{ISO}	R_L = 50 Ω, f = 10 MHz,	Switch OFF, See Figure 22	25°C	5 V		–68		dB
Crosstalk	X_{TALK}	R_L = 50 Ω, f = 10 MHz,	Switch ON, See Figure 23	25°C	5 V		–66		dB
Total harmonic distortion	THD	R_L = 600 Ω, C_L = 50 pF,	f = 20 Hz to 20 kHz, See Figure 25	25°C	5 V		0.01%		
Supply									
Positive supply current	I_{CC}	V_{IN} = V_{CC} or GND,	Switch ON or OFF	25°C	5.5 V		0.1	1	µA
				Full				5	

Copyright © 2005–2018, Texas Instruments Incorporated

6.6 Electrical Characteristics For 3.3-V Supply(1)

V_{CC} = 3 V to 3.6 V, T_A = –40°C to 85°C (unless otherwise noted)

PARAMETER	SYMBOL	TEST CONDITIONS		T_A	V_{CC}	MIN	TYP	MAX	UNIT
Analog Switch									
Analog signal range	V_{COM}, V_{NO}					0		V_{CC}	V
ON-state resistance	r_{on}	0 ≤ V_{NO} ≤ V_{CC}, I_{COM} = –24 mA,	Switch ON, See Figure 16	25°C	3 V		12	15	Ω
				Full				20	
ON-state resistance match between channels	Δr_{on}	V_{NO} = 2.1 V, I_{COM} = –24 mA,	Switch ON, See Figure 16	25°C	3 V		0.5	1.5	Ω
				Full				3.5	
ON-state resistance flatness	$r_{on(flat)}$	0 ≤ V_{NO} ≤ V_{CC}, I_{COM} = –24 mA,	Switch ON, See Figure 16	25°C	3 V		7	8	Ω
				Full				12	
NO OFF leakage current	$I_{NO(OFF)}$	V_{NO} = 1 V, V_{COM} = 3 V, or V_{NO} = 3 V, V_{COM} = 1 V,	Switch OFF, See Figure 17	25°C	3.6 V	–30	–6	30	nA
				Full		–40		40	
COM OFF leakage current	$I_{COM(OFF)}$	V_{COM} = 1 V, V_{NO} = 3 V, or V_{COM} = 3 V, V_{NO} = 1 V,	Switch OFF, See Figure 17	25°C	3.6 V	–50	–7	50	nA
				Full		–50		50	
NO ON leakage current	$I_{NO(ON)}$	V_{NO} = 1 V, V_{COM} = Open, or V_{NO} = 3 V, V_{COM} = Open,	Switch ON, See Figure 18	25°C	3.6 V	–40	–7	40	nA
				Full		–40		40	
COM ON leakage current	$I_{COM(ON)}$	V_{COM} = 1 V, V_{NO} = Open, or V_{COM} = 3 V, V_{NO} = Open,	Switch ON, See Figure 18	25°C	3.6 V	–70	–20	70	nA
				Full		–70		70	
Digital Control Input (IN)									
Input logic high	V_{IH}			Full		V_{CC} × 0.7		5.5	V
Input logic low	V_{IL}			Full		0		V_{CC} × 0.3	V
Input leakage current	I_{IH}, I_{IL}	V_{IN} = 5.5 V or 0		25°C	3.6 V	–0.1	0.05	0.1	µA
				Full		–1		1	

(1) The algebraic convention, whereby the most negative value is a minimum and the most positive value is a maximum.

Copyright © 2005–2018, Texas Instruments Incorporated

Electrical Characteristics For 3.3-V Supply[1] (continued)

V_{CC} = 3 V to 3.6 V, T_A = –40°C to 85°C (unless otherwise noted)

PARAMETER	SYMBOL	TEST CONDITIONS		T_A	V_{CC}	MIN	TYP	MAX	UNIT
Dynamic									
Turn-on time	t_{ON}	V_{COM} = 2 V, R_L = 300 Ω,	C_L = 35 pF, See Figure 20	25°C	3.3 V	4.9	5.6	6.4	ns
				Full	3 V to 3.6 V	4.3		7.1	
Turn-off time	t_{OFF}	V_{COM} = 2 V, R_L = 300 Ω,	C_L = 35 pF, See Figure 20	25°C	3.3 V	2	2.7	3.7	ns
				Full	3 V to 3.6 V	1.3		4.7	
Charge injection	Q_C	V_{GEN} = 0, R_{GEN} = 0,	C_L = 0.1 nF, See Figure 24	25°C	3.3 V		0.5		pC
NO OFF capacitance	$C_{NO(OFF)}$	V_{NO} = V_{CC} or GND,	Switch OFF, See Figure 19	25°C	3.3 V		5.5		pF
COM OFF capacitance	$C_{COM(OFF)}$	V_{COM} = V_{CC} or GND,	Switch OFF, See Figure 19	25°C	3.3 V		6		pF
NO ON capacitance	$C_{NO(ON)}$	V_{NO} = V_{CC} or GND,	Switch ON, See Figure 19	25°C	3.3 V		14		pF
COM ON capacitance	$C_{COM(ON)}$	V_{COM} = V_{CC} or GND,	Switch ON, See Figure 19	25°C	3.3 V		14		pF
Digital input capacitance	C_I	V_{IN} = V_{CC} or GND,	See Figure 19	25°C	3.3 V		3		pF
Bandwidth	BW	R_L = 50 Ω,	Switch ON, See Figure 21	25°C	3.3 V		300		MHz
OFF isolation	O_{ISO}	R_L = 50 Ω, f = 10 MHz,	Switch OFF, See Figure 22	25°C	3.3 V		–68		dB
Crosstalk	X_{TALK}	R_L = 50 Ω, f = 10 MHz,	Switch ON, See Figure 23	25°C	3.3 V		–66		dB
Total harmonic distortion	THD	R_L = 600 Ω, C_L = 50 pF,	f = 20 Hz to 20 kHz, See Figure 25	25°C	3.3 V		0.065%		
Supply									
Positive supply current	I_{CC}	V_{IN} = V_{CC} or GND,	Switch ON or OFF	25°C	3.6 V		0.1	1	µA
				Full				5	

Copyright © 2005–2018, Texas Instruments Incorporated

6.7 Electrical Characteristics For 2.5-V Supply(1)

V_{CC} = 2.3 V to 2.7 V, T_A = –40°C to 85°C (unless otherwise noted)

PARAMETER	SYMBOL	TEST CONDITIONS		T_A	V_{CC}	MIN	TYP	MAX	UNIT
Analog Switch									
Analog signal range	V_{COM}, V_{NO}					0		V_{CC}	V
ON-state resistance	r_{on}	0 ≤ V_{NO} ≤ V_{CC}, I_{COM} = –8 mA,	Switch ON, See Figure 16	25°C	2.3 V		22		Ω
				Full				30	
ON-state resistance match between channels	Δr_{on}	V_{NO} = 1.6 V, I_{COM} = –8 mA,	Switch ON, SeeFigure 16	25°C	2.3 V		0.5	1.5	Ω
				Full				5	
ON-state resistance flatness	$r_{on(flat)}$	0 ≤ V_{NO} ≤ V_{CC}, I_{COM} = –8 mA,	Switch ON, See Figure 16	25°C	2.3 V		16	18	Ω
				Full				25	
NO OFF leakage current	$I_{NO(OFF)}$	V_{NO} = 0.5 V, V_{COM} = 2.2 V, or V_{NO} = 2.2 V, V_{COM} = 0.5 V,	Switch OFF, See Figure 17	25°C	2.7 V	–30	–5.5	30	nA
				Full		–40		40	
COM OFF leakage current	$I_{COM(OFF)}$	V_{COM} = 0.5 V, V_{NO} = 2.2 V, or V_{COM} = 2.2 V, V_{NO} = 0.5 V,	Switch OFF, See Figure 17	25°C	2.7 V	–50	–7.5	50	nA
				Full		–50		50	
NO ON leakage current	$I_{NO(ON)}$	V_{NO} = 0.5 V, V_{COM} = Open, or V_{NO} = 2.2 V, V_{COM} = Open,	Switch ON, See Figure 18	25°C	2.7 V	–40	–5	40	nA
				Full		–40		40	
COM ON leakage current	$I_{COM(ON)}$	V_{COM} = 0.5 V, V_{NO} = Open, or V_{COM} = 2.2 V, V_{NO} = Open,	Switch ON, See Figure 18	25°C	2.7 V	–70	–12	70	nA
				Full		–70		70	
Digital Control Input (IN)									
Input logic high	V_{IH}			Full		V_{CC} × 0.7		5.5	V
Input logic low	V_{IL}			Full		0		V_{CC} × 0.3	V
Input leakage current	I_{IH}, I_{IL}	V_{IN} = 5.5 V or 0		25°C	2.7 V	–0.1	0.05	0.1	µA
				Full		–1		1	

(1) The algebraic convention, whereby the most negative value is a minimum and the most positive value is a maximum.

Copyright © 2005–2018, Texas Instruments Incorporated

Electrical Characteristics For 2.5-V Supply[1] (continued)

V_{CC} = 2.3 V to 2.7 V, T_A = –40°C to 85°C (unless otherwise noted)

PARAMETER	SYMBOL	TEST CONDITIONS		T_A	V_{CC}	MIN	TYP	MAX	UNIT
Dynamic									
Turn-on time	t_{ON}	V_{COM} = 1.5 V, R_L = 300 Ω,	C_L = 35 pF, See Figure 20	25°C	2.5 V	5.7	6.4	8.1	ns
				Full	2.3 V to 2.7 V	4.4		8.5	
Turn-off time	t_{OFF}	V_{COM} = 1.5 V, R_L = 300 Ω,	C_L = 35 pF, See Figure 20	25°C	2.5 V	2.1	3.1	4.3	ns
				Full	2.3 V to 2.7 V	1.8		4.8	
Charge injection	Q_C	V_{GEN} = 0, R_{GEN} = 0,	C_L = 0.1 nF, See Figure 24	25°C	2.5 V		0.5		pC
NO OFF capacitance	$C_{NO(OFF)}$	V_{NO} = V_{CC} or GND,	Switch OFF, See Figure 19	25°C	2.5 V		6		pF
COM OFF capacitance	$C_{COM(OFF)}$	V_{COM} = V_{CC} or GND,	Switch OFF, See Figure 19	25°C	2.5 V		6		pF
NO ON capacitance	$C_{NO(ON)}$	V_{NO} = V_{CC} or GND,	Switch ON, See Figure 19	25°C	2.5 V		14		pF
COM ON capacitance	$C_{COM(ON)}$	V_{COM} = V_{CC} or GND,	Switch ON, See Figure 19	25°C	2.5 V		14		pF
Digital input capacitance	C_{IN}	V_{IN} = V_{CC} or GND,	See Figure 19	25°C	2.5 V		3		pF
Bandwidth	BW	R_L = 50 Ω,	Switch ON, See Figure 21	25°C	2.5 V		300		MHz
OFF isolation	O_{ISO}	R_L = 50 Ω, f = 10 MHz,	Switch OFF, See Figure 22	25°C	2.5 V		–68		dB
Crosstalk	X_{TALK}	R_L = 50 Ω, f = 10 MHz,	Switch ON, See Figure 23	25°C	2.5 V		–66		dB
Total harmonic distortion	THD	R_L = 600 Ω, C_L = 50 pF,	f = 20 Hz to 20 kHz, See Figure 25	25°C	2.5 V		0.35%		
Supply									
Positive supply current	I_{CC}	V_{IN} = V_{CC} or GND,	Switch ON or OFF	25°C	2.7 V		0.1	1	µA
				Full				5	

Copyright © 2005–2018, Texas Instruments Incorporated

6.8 Electrical Characteristics For 1.8-V Supply(1)

V_{CC} = 1.65 V to 1.95 V, T_A = –40°C to 85°C (unless otherwise noted)

PARAMETER	SYMBOL	TEST CONDITIONS		T_A	V_{CC}	MIN	TYP	MAX	UNIT
Analog Switch									
Analog signal range	V_{COM}, V_{NO}					0		V_{CC}	V
ON-state resistance	r_{on}	0 ≤ V_{NO} ≤ V_{CC}, I_{COM} = –4 mA,	Switch ON, See Figure 16	25°C	1.65 V		85		Ω
				Full				120	
ON-state resistance match between channels	Δr_{on}	V_{NO} = 1.15 V, I_{COM} = –4 mA,	Switch ON, See Figure 16	25°C	1.65 V		0.9	2	Ω
				Full				6	
ON-state resistance flatness	$r_{on(flat)}$	0 ≤ V_{NO} ≤ V_{CC}, I_{COM} = –4 mA,	Switch ON, See Figure 16	25°C	1.65 V		75	85	Ω
				Full				100	
NO OFF leakage current	$I_{NO(OFF)}$	V_{NO} = 0.3 V, V_{COM} = 1.65 V, or V_{NO} = 1.65 V, V_{COM} = 0.3 V,	Switch OFF, See Figure 17	25°C	1.95 V	–30	–6	30	nA
				Full		–40		40	
COM OFF leakage current	$I_{COM(OFF)}$	V_{COM} = 0.3 V, V_{NO} = 1.65 V, or V_{COM} = 1.65 V, V_{NO} = 0.3 V,	Switch OFF, See Figure 17	25°C	1.95 V	–50	–7	50	nA
				Full		–50		50	
NO ON leakage current	$I_{NO(ON)}$	V_{NO} = 0.3 V, V_{COM} = Open, or V_{NO} = 1.65 V, V_{COM} = Open,	Switch ON, See Figure 18	25°C	1.95 V	–40	7	40	nA
				Full		–40		40	
COM ON leakage current	$I_{COM(ON)}$	V_{COM} = 0.3 V, V_{NO} = Open, or V_{COM} = 1.65 V, V_{NO} = Open,	Switch ON, See Figure 18	25°C	1.95 V	–70	–8.5	70	nA
				Full		–70		70	
Digital Control Input (IN)									
Input logic high	V_{IH}			Full		V_{CC} × 0.65		5.5	V
Input logic low	V_{IL}			Full		0		V_{CC} × 0.35	V
Input leakage current	I_{IH}, I_{IL}	V_{IN} = 5.5 V or 0		25°C	1.95 V	–0.1	0.05	0.1	µA
				Full		–1		1	

(1) The algebraic convention, whereby the most negative value is a minimum and the most positive value is a maximum.

Copyright © 2005–2018, Texas Instruments Incorporated

Electrical Characteristics For 1.8-V Supply[1] (continued)

V_{CC} = 1.65 V to 1.95 V, T_A = –40°C to 85°C (unless otherwise noted)

PARAMETER	SYMBOL	TEST CONDITIONS		T_A	V_{CC}	MIN	TYP	MAX	UNIT
Dynamic									
Turn-on time	t_{ON}	V_{COM} = 1.3 V, R_L = 300 Ω,	C_L = 35 pF, See Figure 20	25°C	1.8 V	9.3	10.4	11.5	ns
				Full	1.65 V to 1.95 V	6.8		12.9	
Turn-off time	t_{OFF}	V_{COM} = 1.3 V, R_L = 300 Ω,	C_L = 35 pF, See Figure 20	25°C	1.8 V	3.3	4.3	5.2	ns
				Full	1.65 V to 1.95 V	2.4		6.5	
Charge injection	Q_C	V_{GEN} = 0, R_{GEN} = 0,	C_L = 0.1 nF, See Figure 24	25°C	1.8 V		0.5		pC
NO OFF capacitance	$C_{NO(OFF)}$	V_{NO} = V_{CC} or GND,	Switch OFF, See Figure 19	25°C	1.8 V		6		pF
COM OFF capacitance	$C_{COM(OFF)}$	V_{COM} = V_{CC} or GND,	Switch OFF, See Figure 19	25°C	1.8 V		6		pF
NO ON capacitance	$C_{NO(ON)}$	V_{NO} = V_{CC} or GND,	Switch ON, See Figure 19	25°C	1.8 V		14.5		pF
COM ON capacitance	$C_{COM(ON)}$	V_{COM} = V_{CC} or GND,	Switch ON, See Figure 19	25°C	1.8 V		14.5		pF
Digital input capacitance	C_{IN}	V_{IN} = V_{CC} or GND,	See Figure 19	25°C	1.8 V		3		pF
Bandwidth	BW	R_L = 50 Ω,	Switch ON, See Figure 21	25°C	1.8 V		293		MHz
OFF isolation	O_{ISO}	R_L = 50 Ω, f = 10 MHz,	Switch OFF, See Figure 22	25°C	1.8 V		–68		dB
Crosstalk	X_{TALK}	R_L = 50 Ω, f = 10 MHz,	Switch ON, See Figure 23	25°C	1.8 V		–66		dB
Total harmonic distortion	THD	R_L = 10 kΩ, C_L = 50 pF,	f = 20 Hz to 20 kHz, See Figure 25	25°C	1.8 V		2.7%		
Supply									
Positive supply current	I_{CC}	V_{IN} = V_{CC} or GND,	Switch ON or OFF	25°C	1.95 V		0.1	1	µA
				Full				5	

Copyright © 2005–2018, Texas Instruments Incorporated

6.9 Typical Performance

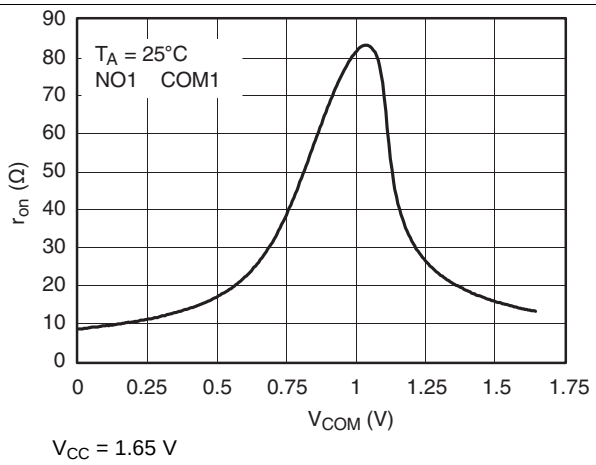

Figure 1. r_{on} vs V_{COM}

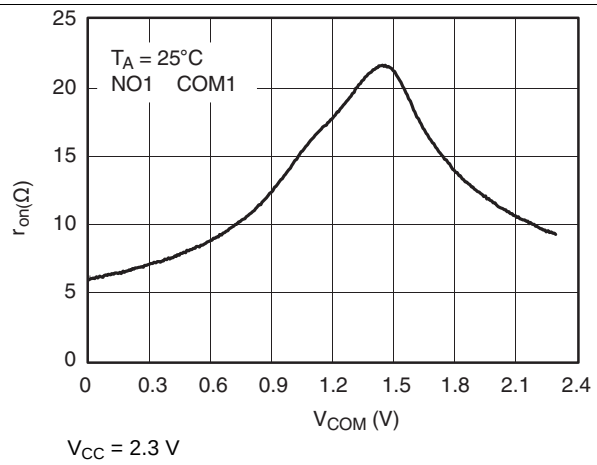

Figure 2. r_{on} vs V_{COM}

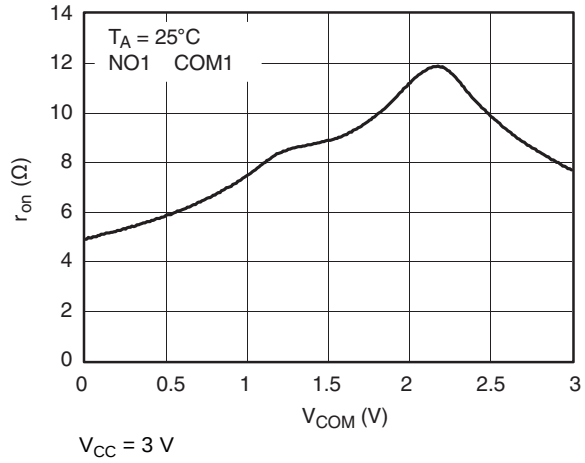

Figure 3. r_{on} vs V_{COM}

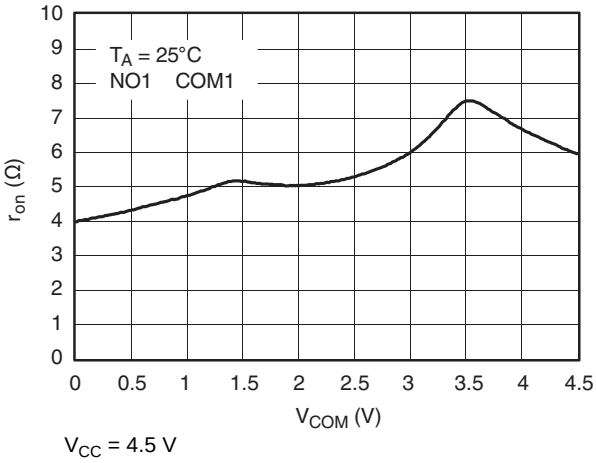

Figure 4. r_{on} vs V_{COM}

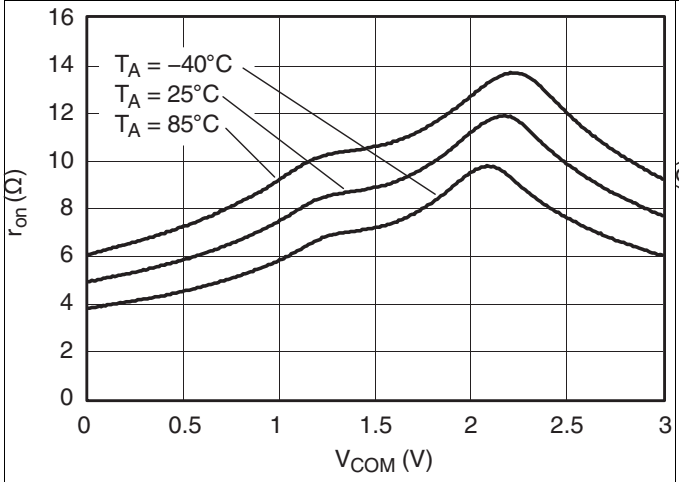

Figure 5. r_{on} vs V_{COM} (V_{CC} = 3 V)

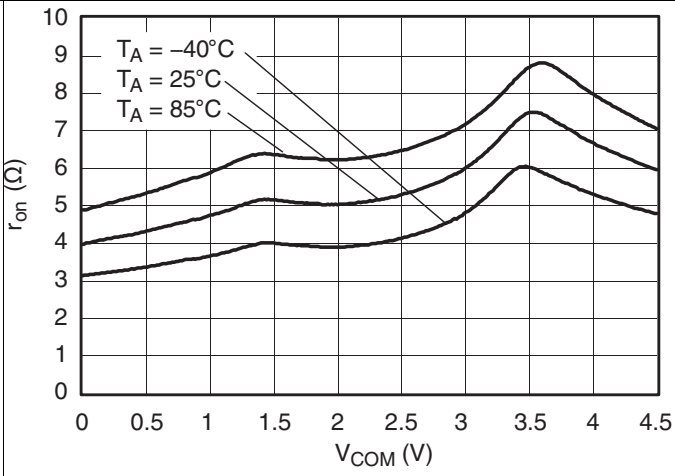

Figure 6. r_{on} vs V_{COM} (V_{CC} = 4.5 V)

Copyright © 2005–2018, Texas Instruments Incorporated

Typical Performance (continued)

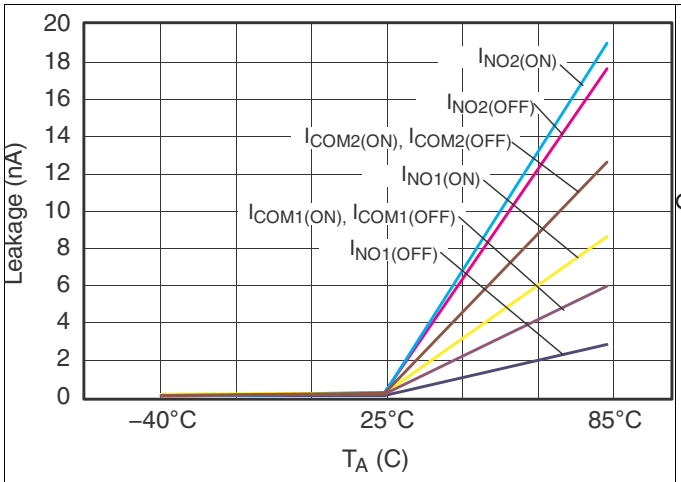

Figure 7. Leakage Current vs Temperature

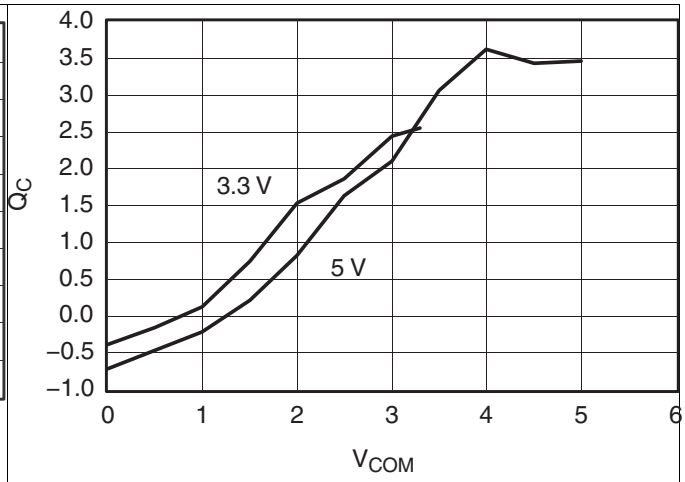

Figure 8. Charge Injection (Q_C) vs V_{COM}

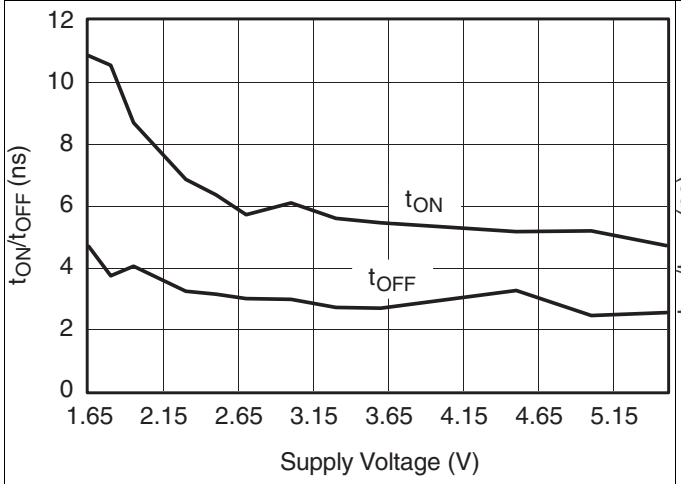

Figure 9. t_{ON} and t_{OFF} vs V_{CC}

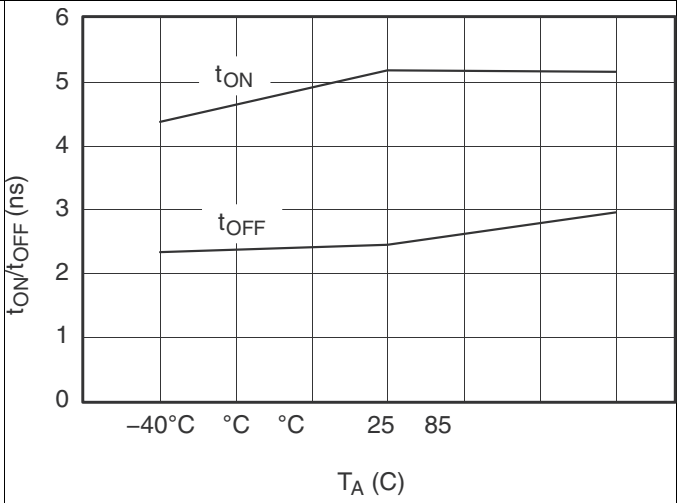

Figure 10. t_{ON} and t_{OFF} vs Temperature (V_{CC} = 5 V)

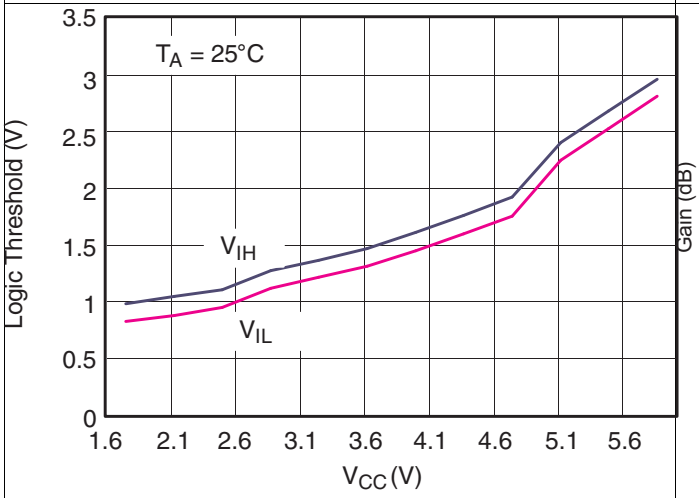

Figure 11. Logic Threshold vs V_{CC}

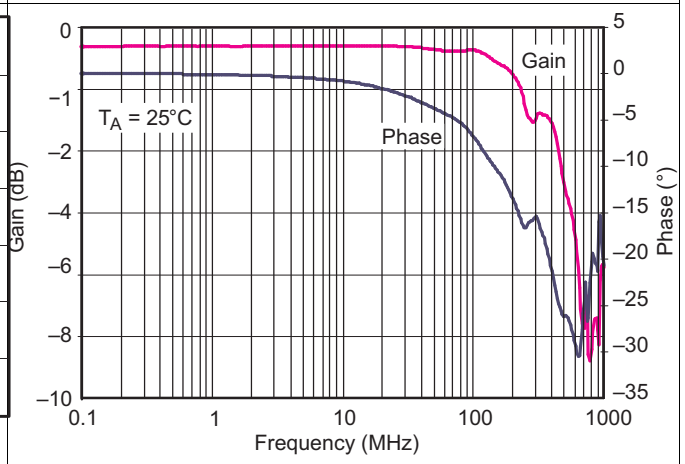

Figure 12. Bandwidth (V_{CC} = 5 V)

Copyright © 2005–2018, Texas Instruments Incorporated

Typical Performance (continued)

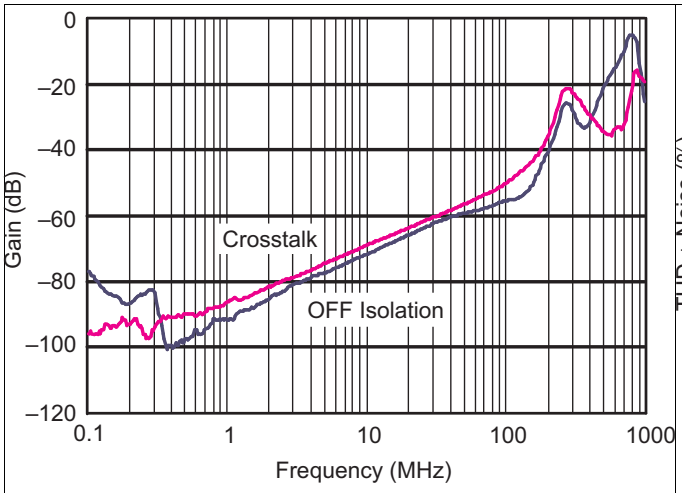

Figure 13. OFF Isolation and Crosstalk (V_{CC} = 5 V)

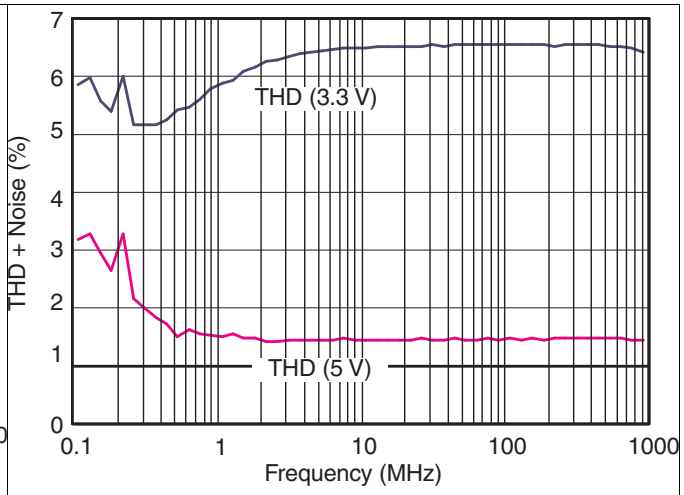

Figure 14. Total Harmonic Distortion vs Frequency

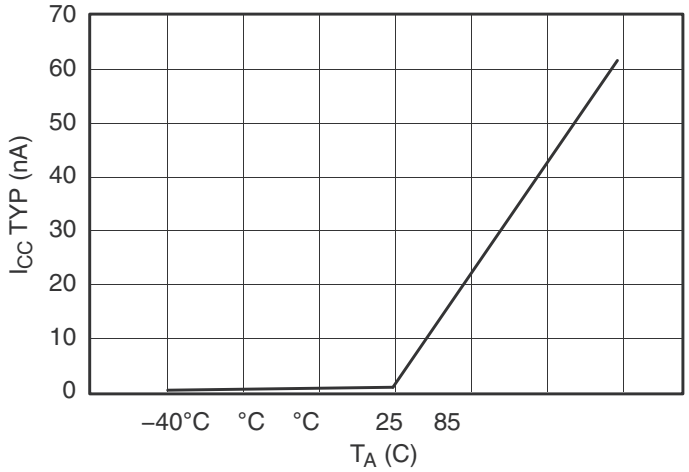

Figure 15. Power-Supply Current vs Temperature (V_{CC} = 5 V)

7 Parameter Measurement Information

Table 1. Parameter Description

SYMBOL	DESCRIPTION
V_{COM}	Voltage at COM
V_{NO}	Voltage at NO
r_{on}	Resistance between COM and NO ports when the channel is ON
Δr_{on}	Difference of r_{on} between channels in a specific device
$r_{on(flat)}$	Difference between the maximum and minimum value of r_{on} in a channel over the specified range of conditions
$I_{NO(OFF)}$	Leakage current measured at the NO port, with the corresponding channel (NO to COM) in the OFF state
$I_{NO(ON)}$	Leakage current measured at the NO port, with the corresponding channel (NO to COM) in the ON state and the output (COM) open
$I_{COM(OFF)}$	Leakage current measured at the COM port, with the corresponding channel (COM to NO) in the OFF state
$I_{COM(ON)}$	Leakage current measured at the COM port, with the corresponding channel (COM to NO) in the ON state and the output (NO) open
V_{IH}	Minimum input voltage for logic high for the control input (IN)
V_{IL}	Maximum input voltage for logic low for the control input (IN)
V_{IN}	Voltage at the control input (IN)
I_{IH}, I_{IL}	Leakage current measured at the control input (IN)
t_{ON}	Turn-on time for the switch. This parameter is measured under the specified range of conditions and by the propagation delay between the digital control (IN) signal and analog output (COM or NO) signal when the switch is turning ON.
t_{OFF}	Turn-off time for the switch. This parameter is measured under the specified range of conditions and by the propagation delay between the digital control (IN) signal and analog output (COM or NO) signal when the switch is turning OFF.
Q_C	Charge injection is a measurement of unwanted signal coupling from the control (IN) input to the analog (NO or COM) output. This is measured in coulomb (C) and measured by the total charge induced due to switching of the control input. Charge injection, $Q_C = C_L \times \Delta V_{COM}$, C_L is the load capacitance and ΔV_{COM} is the change in analog output voltage.
$C_{NO(OFF)}$	Capacitance at the NO port when the corresponding channel (NO to COM) is OFF
$C_{NO(ON)}$	Capacitance at the NO port when the corresponding channel (NO to COM) is ON
$C_{COM(OFF)}$	Capacitance at the COM port when the corresponding channel (COM to NO) is OFF
$C_{COM(ON)}$	Capacitance at the COM port when the corresponding channel (COM to NO) is ON
C_{IN}	Capacitance of IN
O_{ISO}	OFF isolation of the switch is a measurement of OFF-state switch impedance. This is measured in dB in a specific frequency, with the corresponding channel (NO to COM) in the OFF state.
X_{TALK}	Crosstalk is a measurement of unwanted signal coupling from an ON channel to an adjacent ON channel (NC1 to NC2). This is measured in a specific frequency and in dB.
BW	Bandwidth of the switch. This is the frequency in which the gain of an ON channel is –3 dB below the DC gain.
THD	Total harmonic distortion is defined as the ratio of the root mean square (RMS) value of the second, third, and higher harmonics to the magnitude of fundamental harmonic.
I_{CC}	Static power-supply current with the control (IN) pin at V_{CC} or GND

Copyright © 2005–2018, Texas Instruments Incorporated

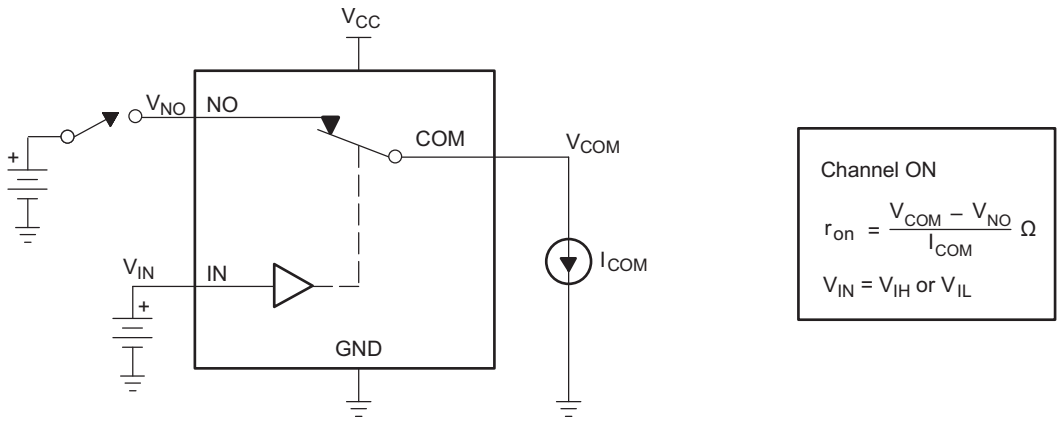

Figure 16. ON-State Resistance (r_{on})

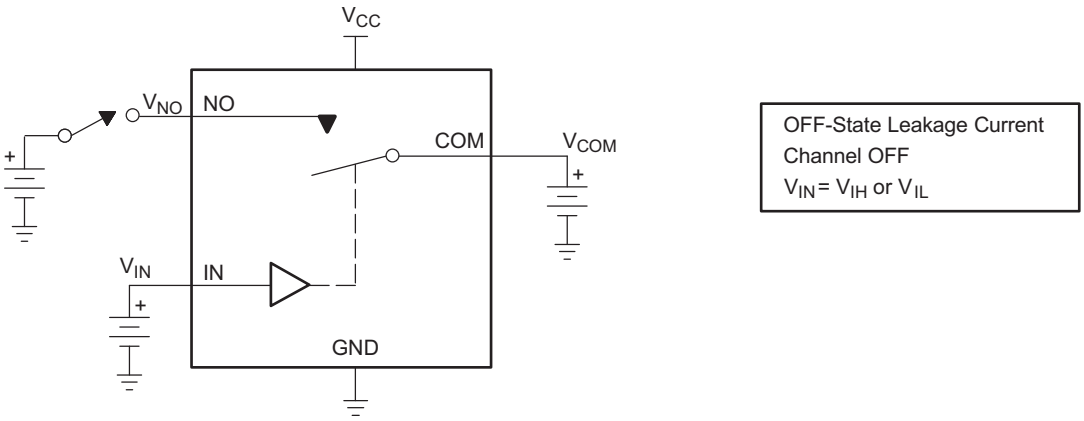

Figure 17. OFF-State Leakage Current ($I_{COM(OFF)}$, $I_{NO(OFF)}$)

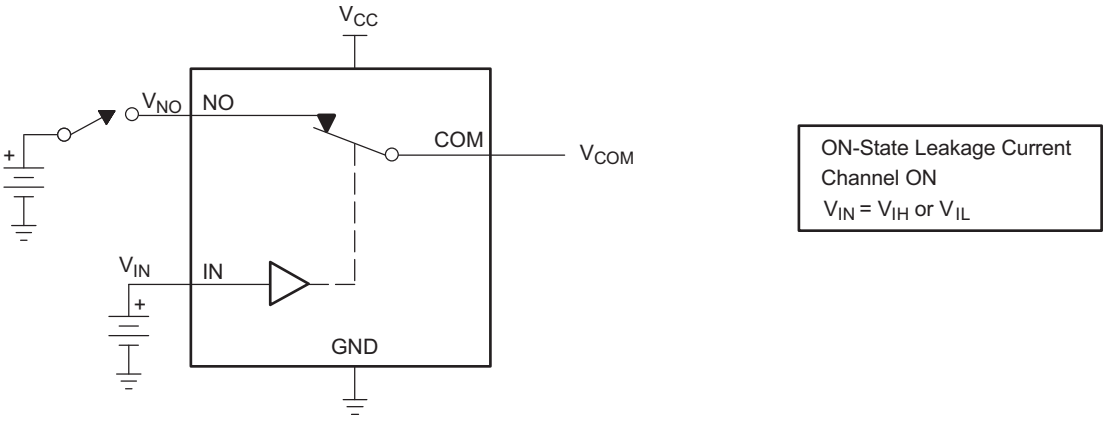

Figure 18. ON-State Leakage Current ($I_{COM(ON)}$, $I_{NO(ON)}$)

Copyright © 2005–2018, Texas Instruments Incorporated

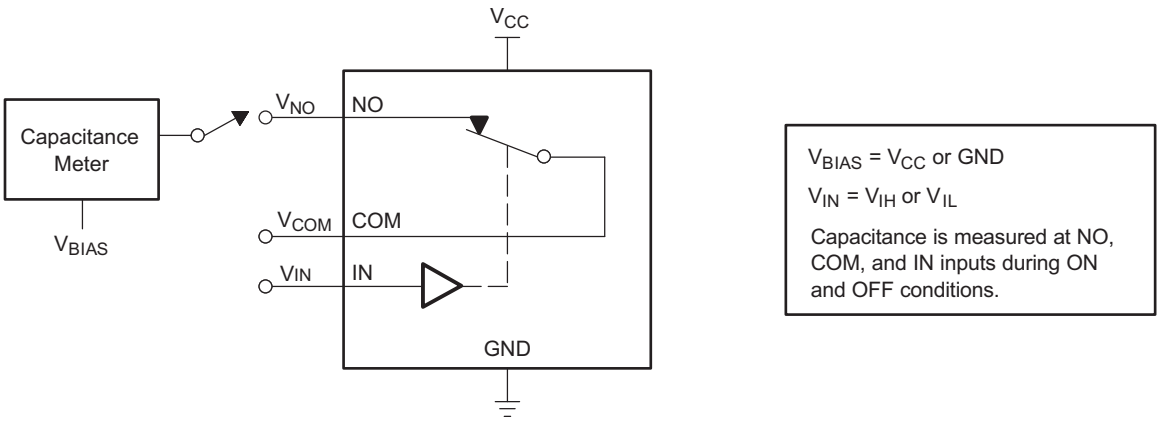

Figure 19. Capacitance (C_{IN}, $C_{COM(OFF)}$, $C_{COM(ON)}$, $C_{NO(OFF)}$, $C_{NO(ON)}$)

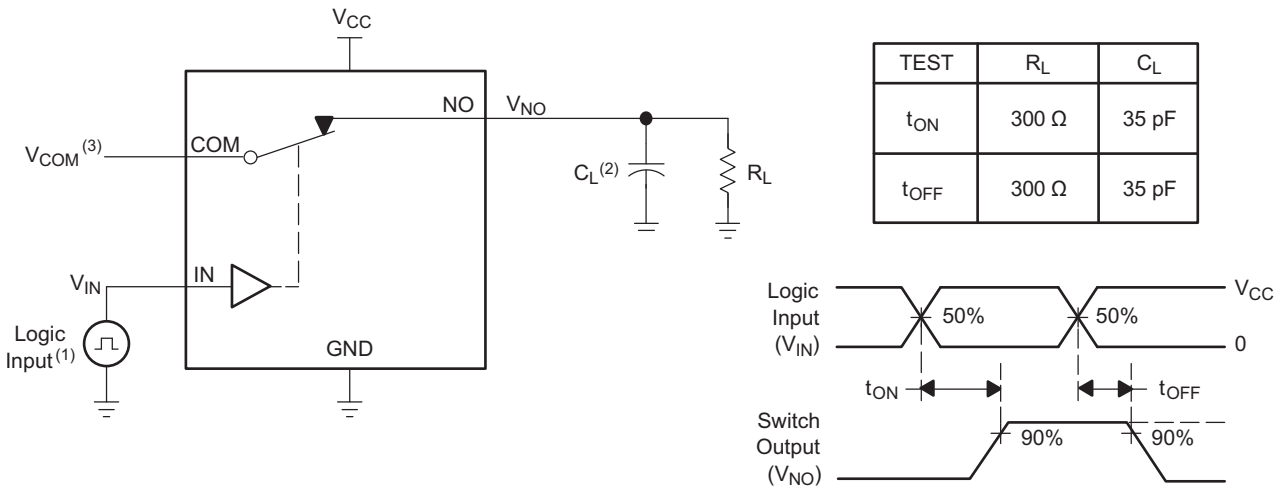

TEST	R_L	C_L
t_{ON}	300 Ω	35 pF
t_{OFF}	300 Ω	35 pF

(1) All input pulses are supplied by generators having the following characteristics: PRR ≤ 10 MHz, Z_O = 50 Ω, t_r < 5 ns, t_f < 5 ns.

(2) C_L includes probe and jig capacitance.

(3) See Electrical Characteristics tables for V_{COM}.

Figure 20. Turn-On (t_{ON}) and Turn-Off Time (t_{OFF})

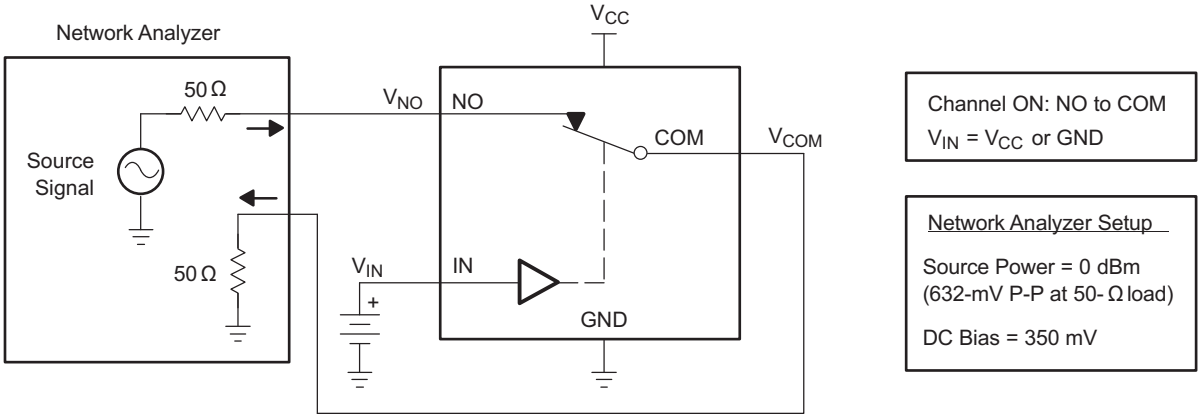

Figure 21. Bandwidth (BW)

Copyright © 2005–2018, Texas Instruments Incorporated

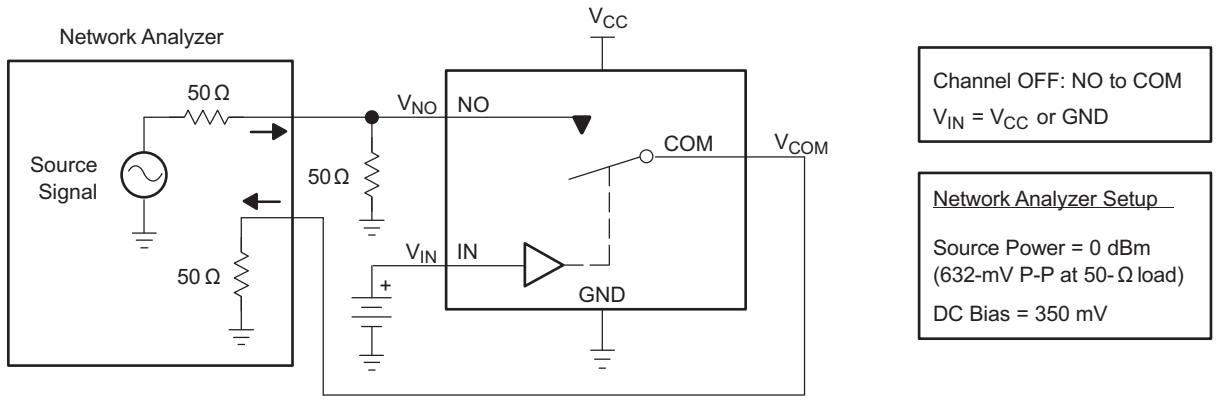

Figure 22. OFF Isolation (O_{ISO})

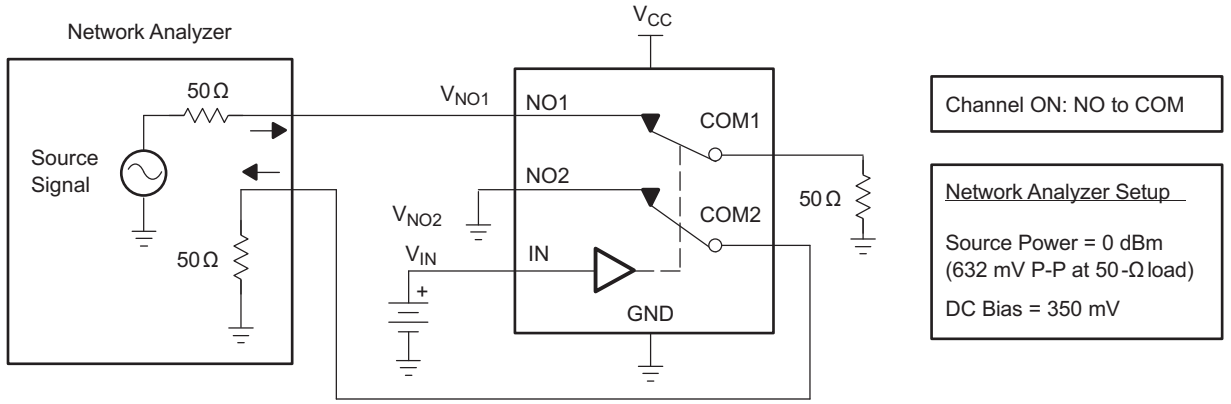

Figure 23. Crosstalk (X_{TALK})

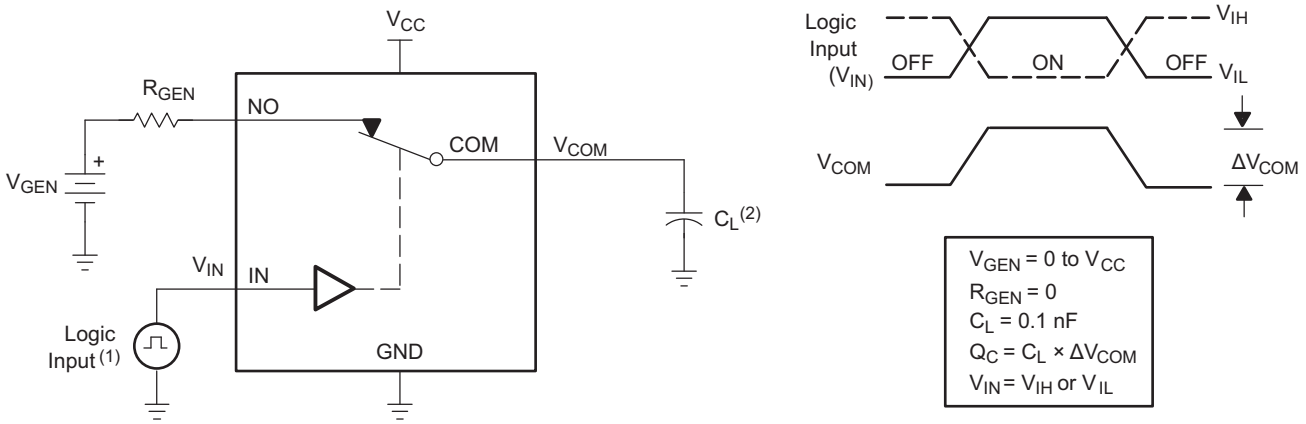

(1) All input pulses are supplied by generators having the following characteristics: PRR ≤ 10 MHz, Z_O = 50 Ω, t_r < 5 ns, t_f < 5 ns.

(2) C_L includes probe and jig capacitance.

Figure 24. Charge Injection (Q_C)

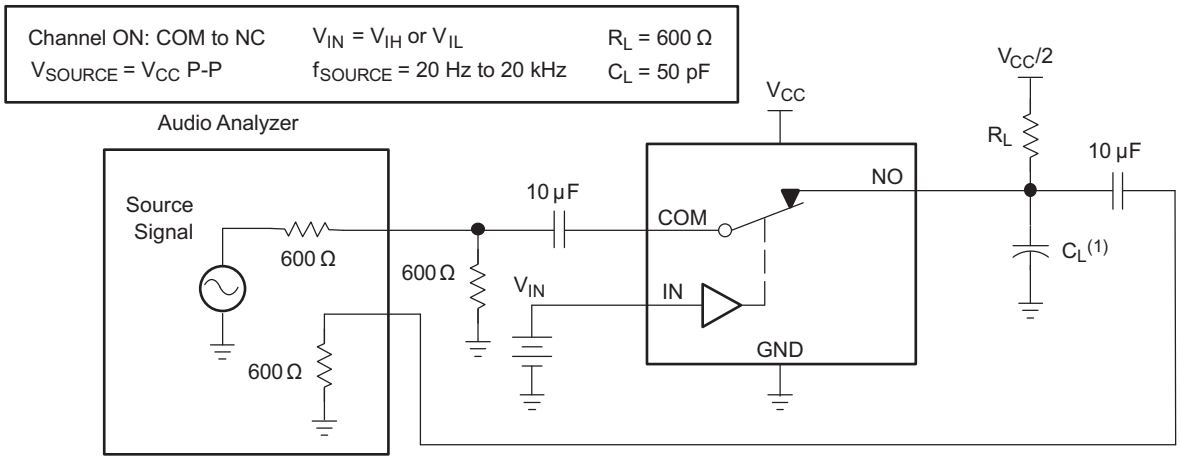

(1) C_L includes probe and jig capacitance.

Figure 25. Total Harmonic Distortion (THD)

Copyright © 2005–2018, Texas Instruments Incorporated

8 Detailed Description

8.1 Overview

The TS5A2066 device is a 2-channel single-pole single-throw (1:1 SPST) analog switch that is designed to operate from 1.65 V to 5.5 V. This device can handle both digital and analog signals, and signals up to V_{CC} can be transmitted in either direction

8.2 Functional Block Diagram

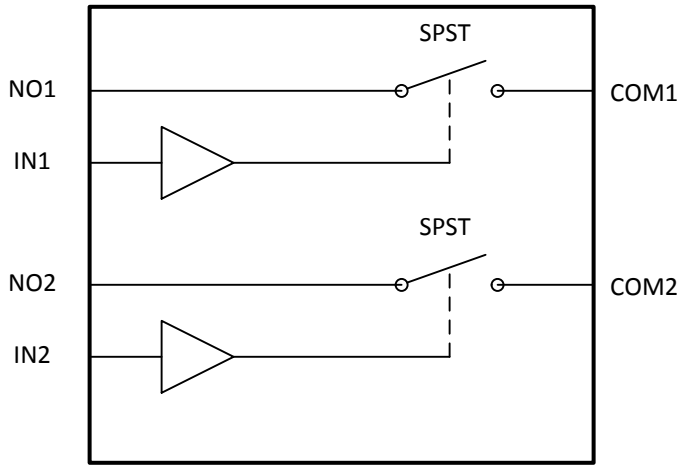

8.3 Feature Description

5-V tolerant control inputs allow 5-V logic levels to be present on the IN pin irrespective of the voltage on VCC pin.

Low ON-resistance and THD performance allows minimal signal distortion through device.

8.4 Device Functional Modes

Table 2 shows the functional modes for TS5A23166.

Table 2. Function Table

IN	NO TO COM, COM TO NO
L	OFF
H	ON

9 Application and Implementation

NOTE

Information in the following applications sections is not part of the TI component specification, and TI does not warrant its accuracy or completeness. TI's customers are responsible for determining suitability of components for their purposes. Customers should validate and test their design implementation to confirm system functionality.

9.1 Application Information

The TS5A2066 2-channel, 1:1 SPST analog switch is a basic component that could be used in any electrical system design that signal isolation.

9.2 Typical Application

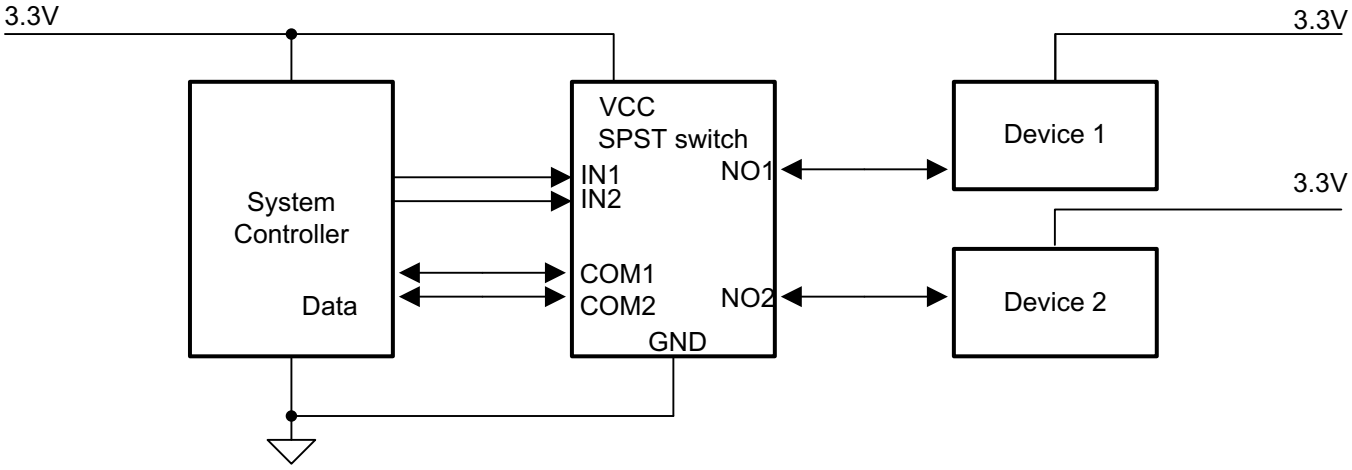

Figure 26. Typical Application Circuit

9.2.1 Design Requirements

Ensure that all of the signals passing through the switch are within the specified ranges in the recommended operating conditions to ensure proper performance.

9.2.2 Detailed Design Procedure

The TS5A2066 can be properly operated without any external components.

Unused signal path pins COM or NO maybe left floating or connected to ground through a 50-Ω resistor to prevent signal reflections back into the device.

TI recommends that the digital control pins (INX) be pulled up to VCC or down to GND to avoid undesired switch positions that could result from the floating pin. Leaving the logic pins floating may increase I_{CC}. Refer to the TI application report, *Implications of Slow or Floating CMOS Inputs* (SCBA004), for further details.

Copyright © 2005–2018, Texas Instruments Incorporated

Typical Application (continued)

9.2.3 Application Curves

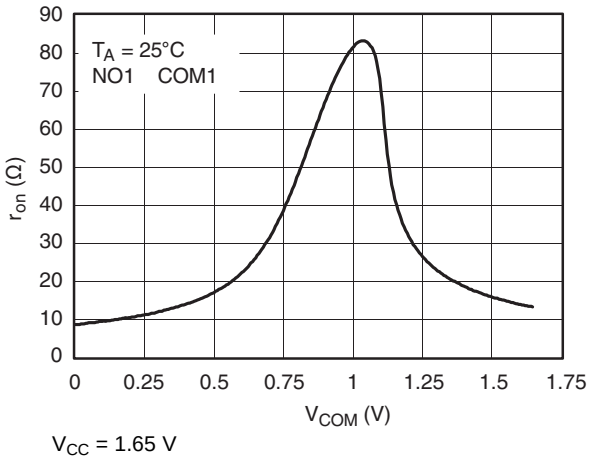

V_{CC} = 1.65 V

Figure 27. r_{on} vs V_{COM}

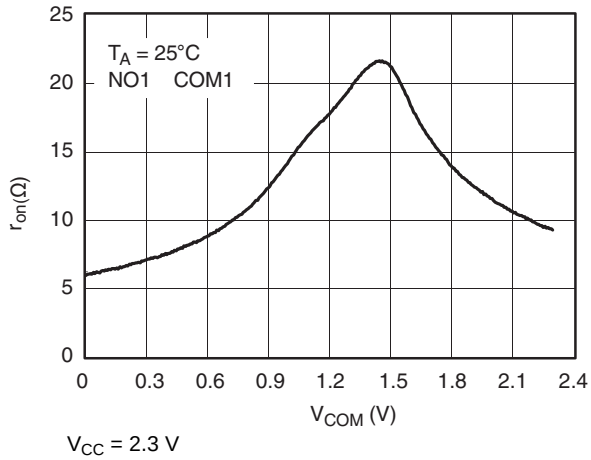

V_{CC} = 2.3 V

Figure 28. r_{on} vs V_{COM}

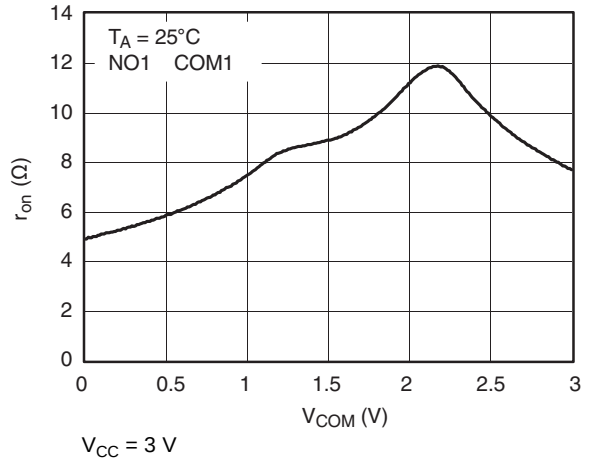

V_{CC} = 3 V

Figure 29. r_{on} vs V_{COM}

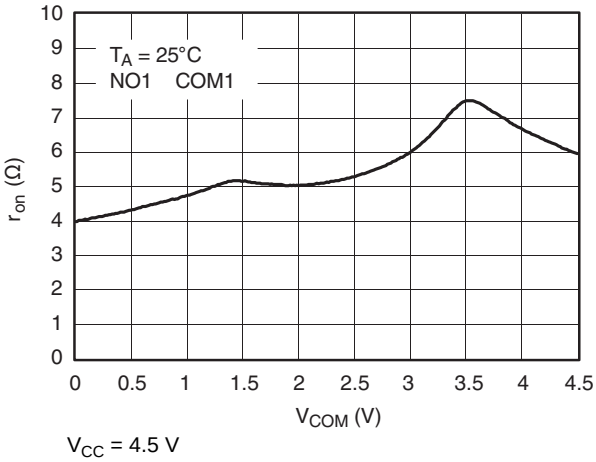

V_{CC} = 4.5 V

Figure 30. r_{on} vs V_{COM}

10 Power Supply Recommendations

Proper power-supply sequencing is recommended for all CMOS devices. Do not exceed the absolute maximum ratings, because stresses beyond the listed ratings can cause permanent damage to the device. Always sequence VCC on first, followed by NO, NC, or COM. Although it is not required, power-supply bypassing improves noise margin and prevents switching noise propagation from the VCC supply to other components. A 0.1-μF capacitor, connected from VCC to GND, is adequate for most applications. Copyright

11 Layout

11.1 Layout Guidelines

High-speed switches require proper layout and design procedures for optimum performance. Reduce stray inductance and capacitance by keeping traces short and wide. Ensure that bypass capacitors are as close to the device as possible. Use large ground planes where possible.

11.2 Layout Example

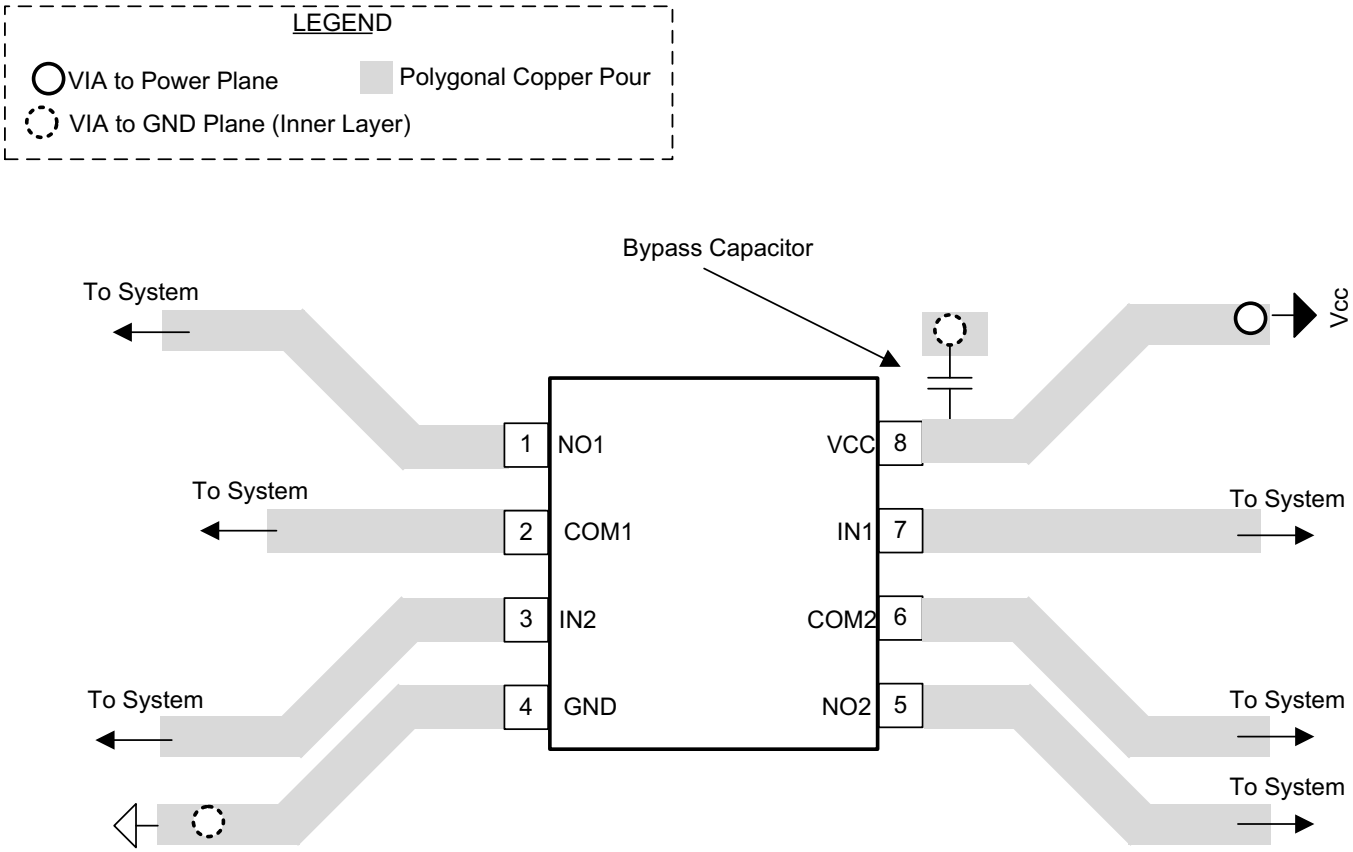

Figure 31. Layout Example

版权 © 2005–2018, Texas Instruments Incorporated

12 器件和文档支持

12.1 接收文档更新通知

要接收文档更新通知，请导航至 TI.com.cn 上的器件产品文件夹。单击右上角的*通知我* 进行注册，即可每周接收产品信息更改摘要。有关更改的详细信息，请查看任何已修订文档中包含的修订历史记录。

12.2 社区资源

下列链接提供到 TI 社区资源的连接。链接的内容由各个分销商"按照原样"提供。这些内容并不构成 TI 技术规范，并且不一定反映 TI 的观点；请参阅 TI 的 《使用条款》。

TI E2E™ 在线社区 ***TI 的工程师对工程师 (E2E) 社区。***此社区的创建目的在于促进工程师之间的协作。在 e2e.ti.com 中，您可以咨询问题、分享知识、拓展思路并与同行工程师一道帮助解决问题。

设计支持 ***TI 参考设计支持*** 可帮助您快速查找有帮助的 E2E 论坛、设计支持工具以及技术支持的联系信息。

12.3 商标

E2E is a trademark of Texas Instruments.
All other trademarks are the property of their respective owners.

12.4 静电放电警告

ESD 可能会损坏该集成电路。德州仪器 (TI) 建议通过适当的预防措施处理所有集成电路。如果不遵守正确的处理措施和安装程序，可能会损坏集成电路。

ESD 的损坏小至导致微小的性能降级，大至整个器件故障。 精密的集成电路可能更容易受到损坏，这是因为非常细微的参数更改都可能会导致器件与其发布的规格不相符。

12.5 术语表

SLYZ022 — *TI 术语表*。

这份术语表列出并解释术语、缩写和定义。

13 机械、封装和可订购信息

以下页面包含机械、封装和可订购信息。这些信息是指定器件的最新可用数据。数据如有变更，恕不另行通知，且不会对此文档进行修订。如需获取此数据表的浏览器版本，请查阅左侧的导航栏。

PACKAGING INFORMATION

Orderable part number	Status (1)	Material type (2)	Package | Pins	Package qty | Carrier	RoHS (3)	Lead finish/ Ball material (4)	MSL rating/ Peak reflow (5)	Op temp (°C)	Part marking (6)
TS5A2066DCTR	Active	Production	SSOP (DCT) | 8	3000 | LARGE T&R	Yes	NIPDAU	Level-1-260C-UNLIM	-40 to 85	JAG Z
TS5A2066DCTR.B	Active	Production	SSOP (DCT) | 8	3000 | LARGE T&R	Yes	NIPDAU	Level-1-260C-UNLIM	-40 to 85	JAG Z
TS5A2066DCUR	Active	Production	VSSOP (DCU) | 8	3000 | LARGE T&R	Yes	NIPDAU | SN	Level-1-260C-UNLIM	-40 to 85	JAGR
TS5A2066DCUR.B	Active	Production	VSSOP (DCU) | 8	3000 | LARGE T&R	Yes	SN	Level-1-260C-UNLIM	-40 to 85	JAGR
TS5A2066YZPR	Active	Production	DSBGA (YZP) | 8	3000 | LARGE T&R	Yes	SNAGCU	Level-1-260C-UNLIM	-40 to 85	J4N
TS5A2066YZPR.B	Active	Production	DSBGA (YZP) | 8	3000 | LARGE T&R	Yes	SNAGCU	Level-1-260C-UNLIM	-40 to 85	J4N

(1) **Status:** For more details on status, see our product life cycle.

(2) **Material type:** When designated, preproduction parts are prototypes/experimental devices, and are not yet approved or released for full production. Testing and final process, including without limitation quality assurance, reliability performance testing, and/or process qualification, may not yet be complete, and this item is subject to further changes or possible discontinuation. If available for ordering, purchases will be subject to an additional waiver at checkout, and are intended for early internal evaluation purposes only. These items are sold without warranties of any kind.

(3) **RoHS values:** Yes, No, RoHS Exempt. See the TI RoHS Statement for additional information and value definition.

(4) **Lead finish/Ball material:** Parts may have multiple material finish options. Finish options are separated by a vertical ruled line. Lead finish/Ball material values may wrap to two lines if the finish value exceeds the maximum column width.

(5) **MSL rating/Peak reflow:** The moisture sensitivity level ratings and peak solder (reflow) temperatures. In the event that a part has multiple moisture sensitivity ratings, only the lowest level per JEDEC standards is shown. Refer to the shipping label for the actual reflow temperature that will be used to mount the part to the printed circuit board.

(6) **Part marking:** There may be an additional marking, which relates to the logo, the lot trace code information, or the environmental category of the part.

Multiple part markings will be inside parentheses. Only one part marking contained in parentheses and separated by a "~" will appear on a part. If a line is indented then it is a continuation of the previous line and the two combined represent the entire part marking for that device.

Important Information and Disclaimer: The information provided on this page represents TI's knowledge and belief as of the date that it is provided. TI bases its knowledge and belief on information provided by third parties, and makes no representation or warranty as to the accuracy of such information. Efforts are underway to better integrate information from third parties. TI has taken and continues to take reasonable steps to provide representative and accurate information but may not have conducted destructive testing or chemical analysis on incoming materials and chemicals. TI and TI suppliers consider certain information to be proprietary, and thus CAS numbers and other limited information may not be available for release.

In no event shall TI's liability arising out of such information exceed the total purchase price of the TI part(s) at issue in this document sold by TI to Customer on an annual basis.

TAPE AND REEL INFORMATION

REEL DIMENSIONS

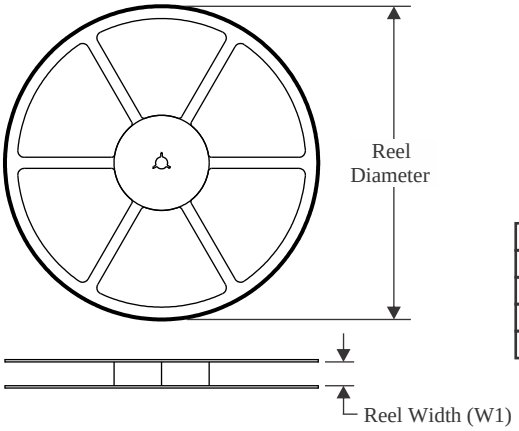

TAPE DIMENSIONS

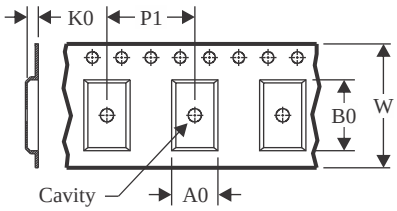

A0	Dimension designed to accommodate the component width
B0	Dimension designed to accommodate the component length
K0	Dimension designed to accommodate the component thickness
W	Overall width of the carrier tape
P1	Pitch between successive cavity centers

QUADRANT ASSIGNMENTS FOR PIN 1 ORIENTATION IN TAPE

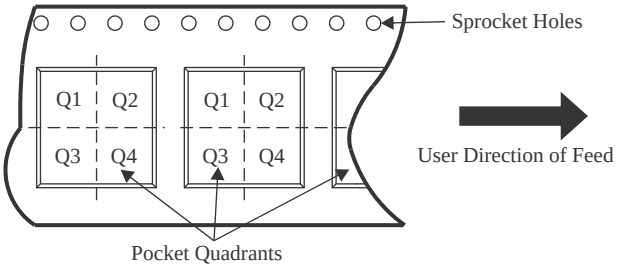

*All dimensions are nominal

Device	Package Type	Package Drawing	Pins	SPQ	Reel Diameter (mm)	Reel Width W1 (mm)	A0 (mm)	B0 (mm)	K0 (mm)	P1 (mm)	W (mm)	Pin1 Quadrant
TS5A2066DCTR	SSOP	DCT	8	3000	180.0	13.0	3.35	4.5	1.55	4.0	12.0	Q3
TS5A2066DCUR	VSSOP	DCU	8	3000	178.0	9.0	2.25	3.35	1.05	4.0	8.0	Q3
TS5A2066YZPR	DSBGA	YZP	8	3000	178.0	9.2	1.02	2.02	0.63	4.0	8.0	Q1

TAPE AND REEL BOX DIMENSIONS

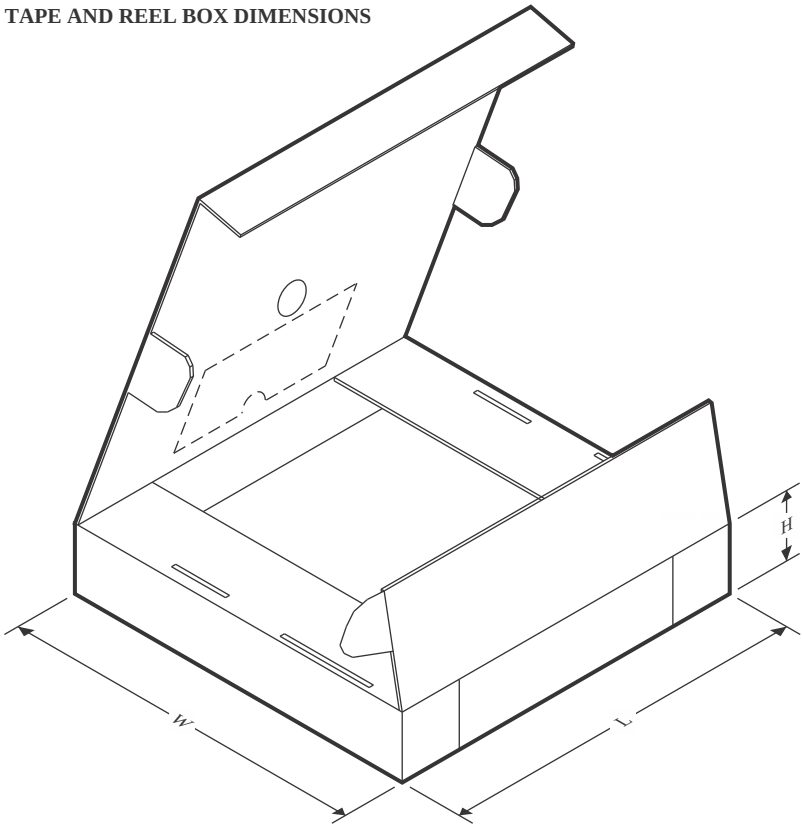

*All dimensions are nominal

Device	Package Type	Package Drawing	Pins	SPQ	Length (mm)	Width (mm)	Height (mm)
TS5A2066DCTR	SSOP	DCT	8	3000	182.0	182.0	20.0
TS5A2066DCUR	VSSOP	DCU	8	3000	180.0	180.0	18.0
TS5A2066YZPR	DSBGA	YZP	8	3000	220.0	220.0	35.0

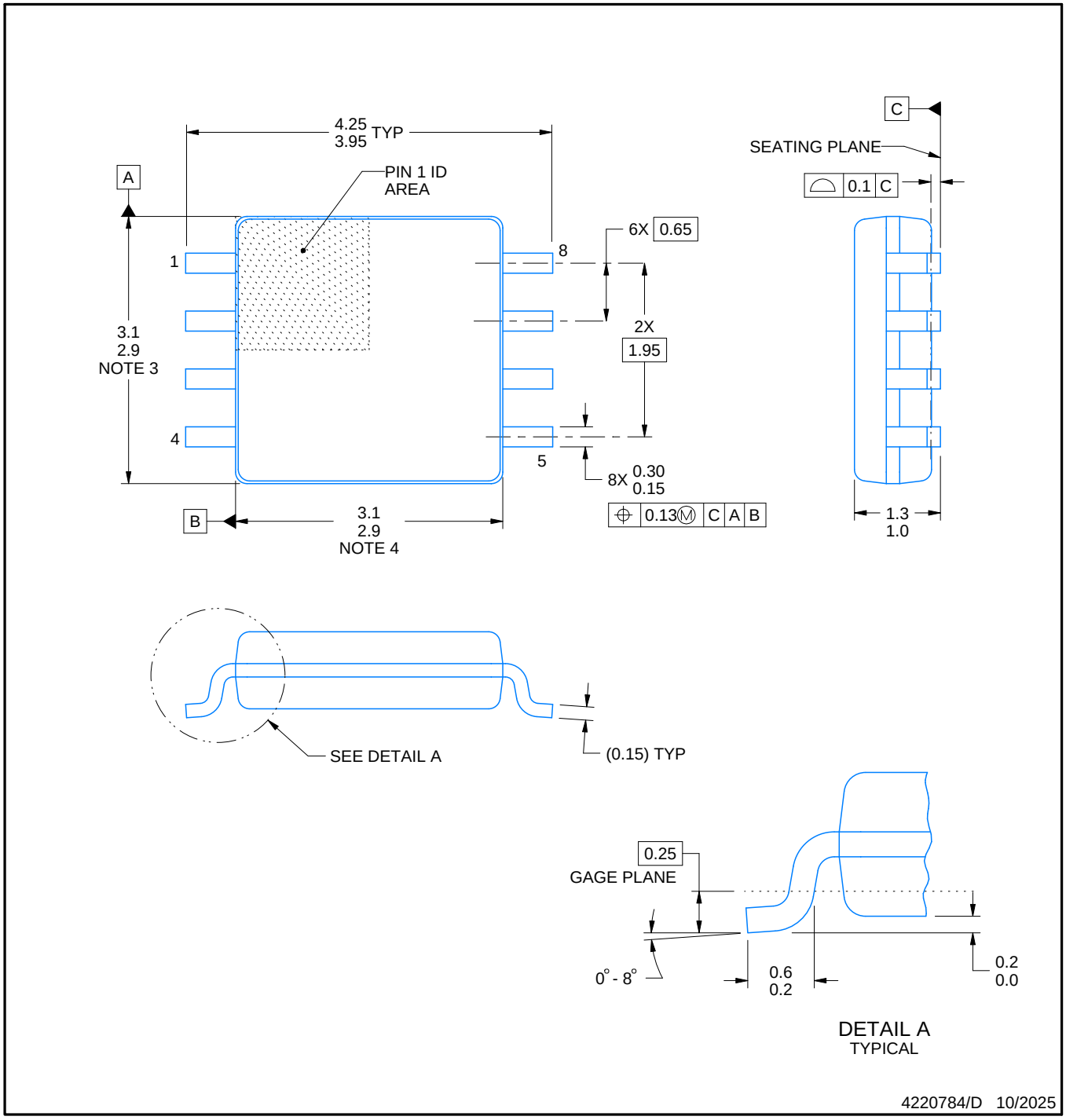

NOTES:

1. All linear dimensions are in millimeters. Dimensions in parenthesis are for reference only. Dimensioning and tolerancing per ASME Y14.5M.
2. This drawing is subject to change without notice.
3. This dimension does not include mold flash, protrusions, or gate burrs. Mold flash, protrusions, or gate burrs shall not exceed 0.15 mm per side.
4. This dimension does not include interlead flash. Interlead flash shall not exceed 0.25 mm per side.

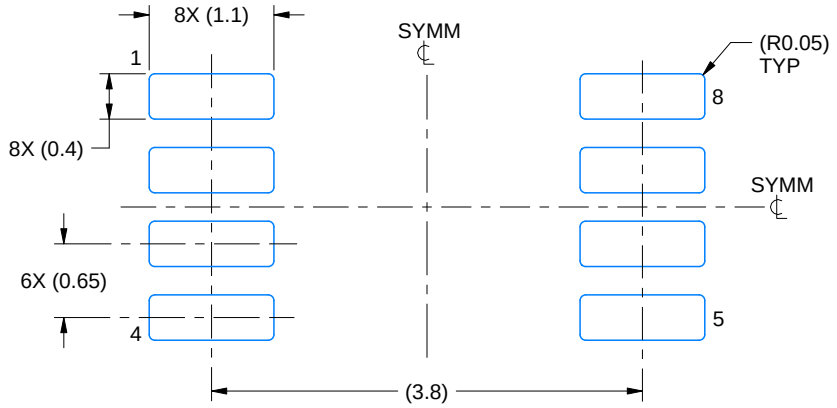

LAND PATTERN EXAMPLE
EXPOSED METAL SHOWN
SCALE:15X

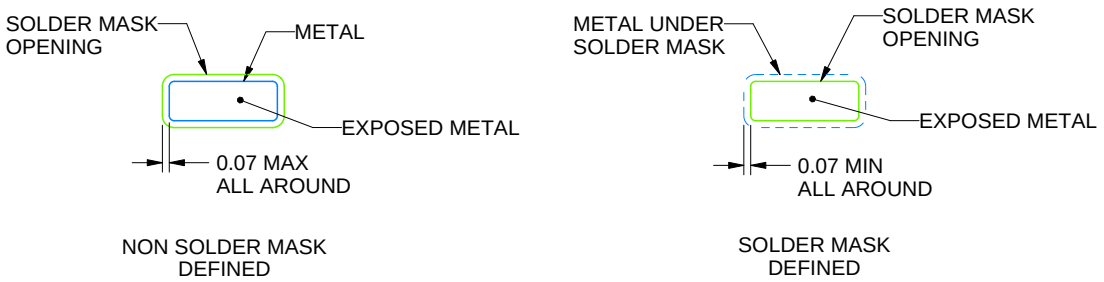

SOLDER MASK DETAILS

4220784/D 10/2025

NOTES: (continued)

5. Publication IPC-7351 may have alternate designs.
6. Solder mask tolerances between and around signal pads can vary based on board fabrication site.

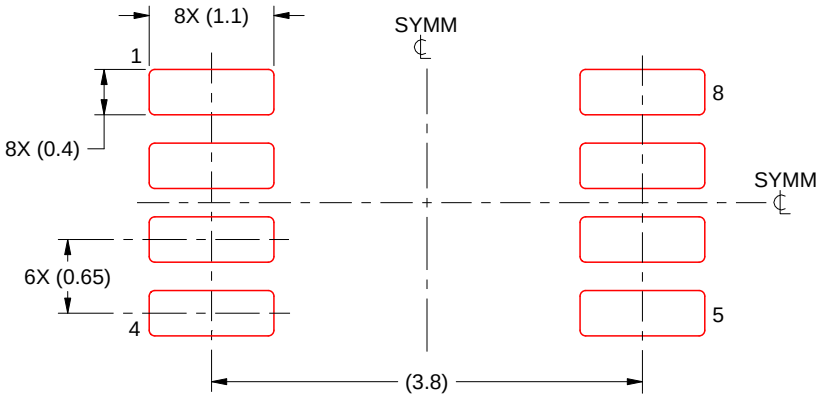

SOLDER PASTE EXAMPLE
BASED ON 0.125 mm THICK STENCIL
SCALE:15X

4220784/D 10/2025

NOTES: (continued)

7. Laser cutting apertures with trapezoidal walls and rounded corners may offer better paste release. IPC-7525 may have alternate design recommendations.
8. Board assembly site may have different recommendations for stencil design.

DCU0008A

PACKAGE OUTLINE

VSSOP - 0.9 mm max height

SMALL OUTLINE PACKAGE

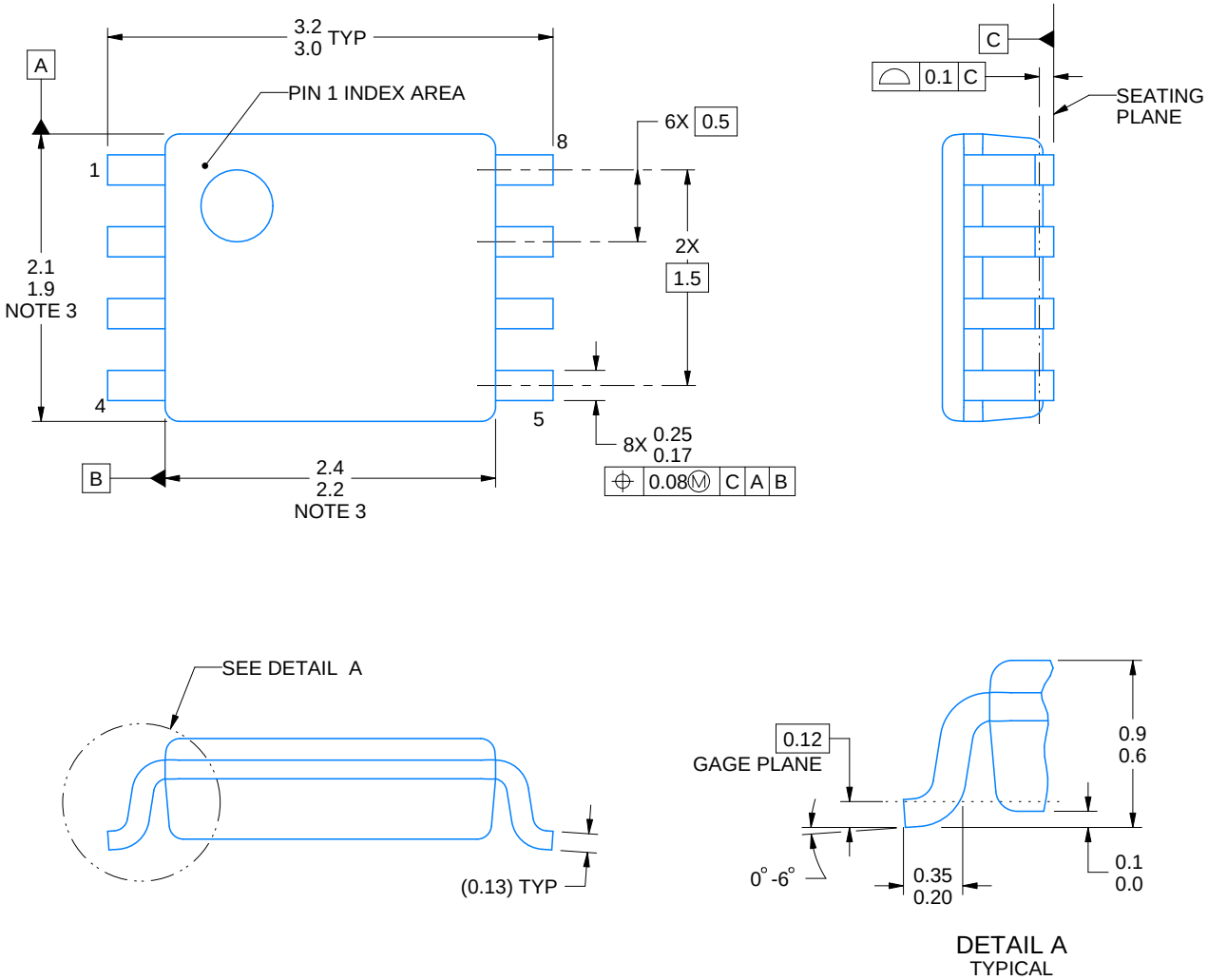

4225266/A 09/2014

NOTES:

1. All linear dimensions are in millimeters. Any dimensions in parenthesis are for reference only. Dimensioning and tolerancing per ASME Y14.5M.
2. This drawing is subject to change without notice.
3. This dimension does not include mold flash, protrusions, or gate burrs. Mold flash, protrusions, or gate burrs shall not exceed 0.15 mm per side.
4. Reference JEDEC registration MO-187 variation CA.

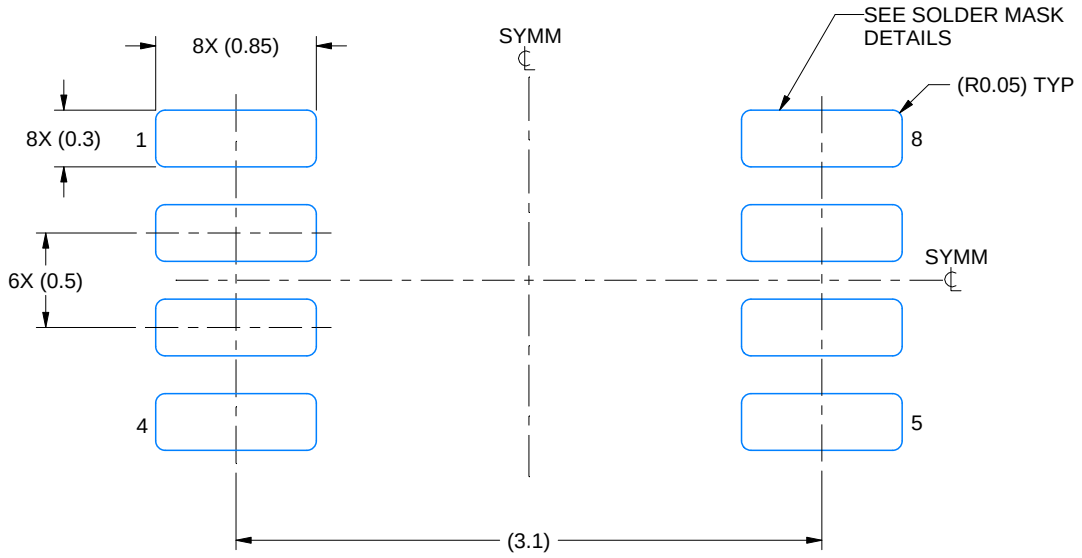

LAND PATTERN EXAMPLE
EXPOSED METAL SHOWN
SCALE: 25X

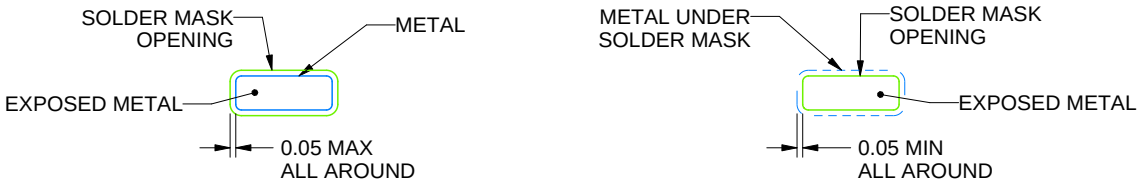

SOLDER MASK DETAILS

4225266/A 09/2014

NOTES: (continued)

5. Publication IPC-7351 may have alternate designs.
6. Solder mask tolerances between and around signal pads can vary based on board fabrication site.

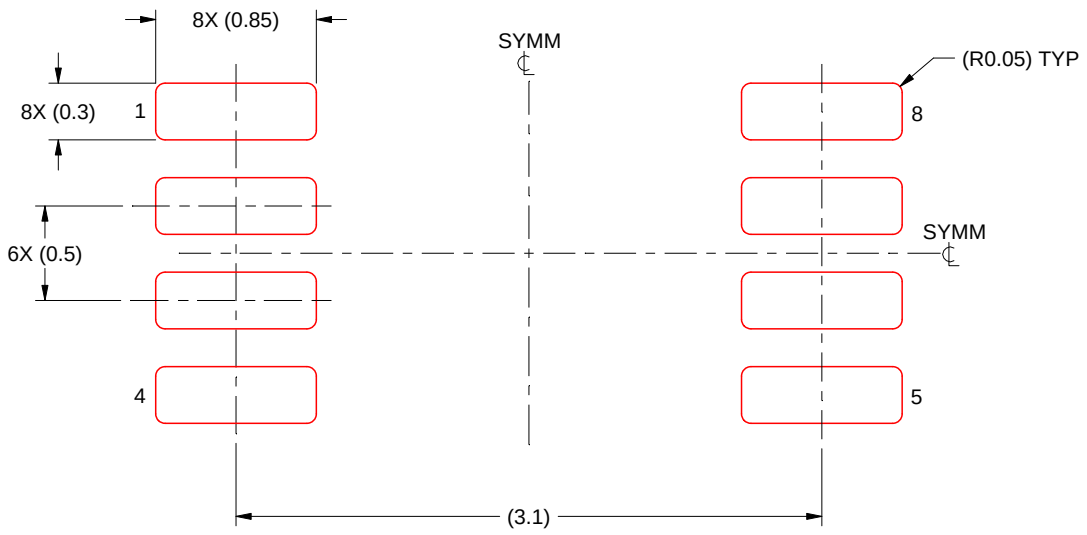

SOLDER PASTE EXAMPLE
BASED ON 0.125 mm THICK STENCIL
SCALE: 25X

4225266/A 09/2014

NOTES: (continued)

7. Laser cutting apertures with trapezoidal walls and rounded corners may offer better paste release. IPC-7525 may have alternate design recommendations.
8. Board assembly site may have different recommendations for stencil design.

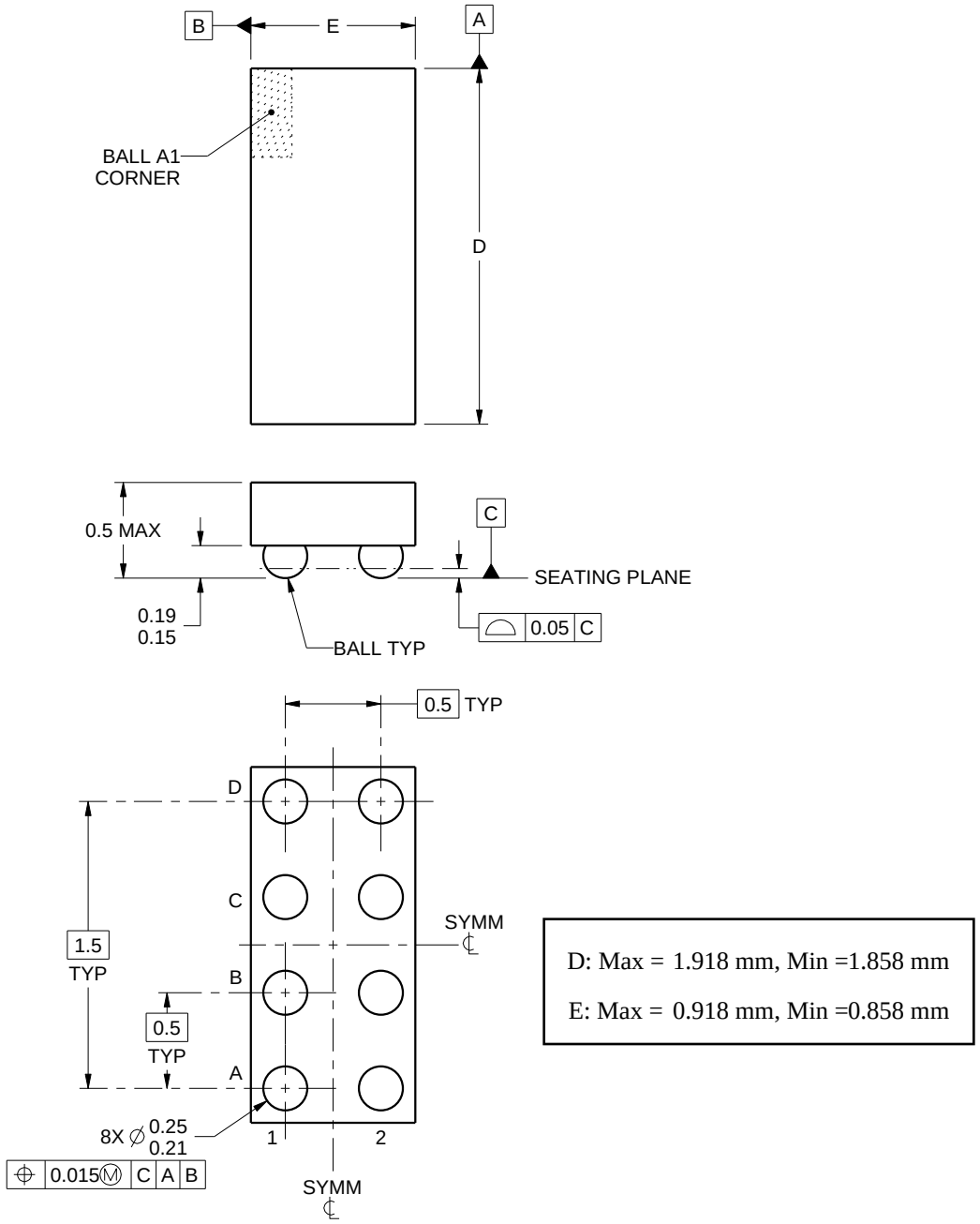

NOTES:

1. All linear dimensions are in millimeters. Any dimensions in parenthesis are for reference only. Dimensioning and tolerancing per ASME Y14.5M.
2. This drawing is subject to change without notice.

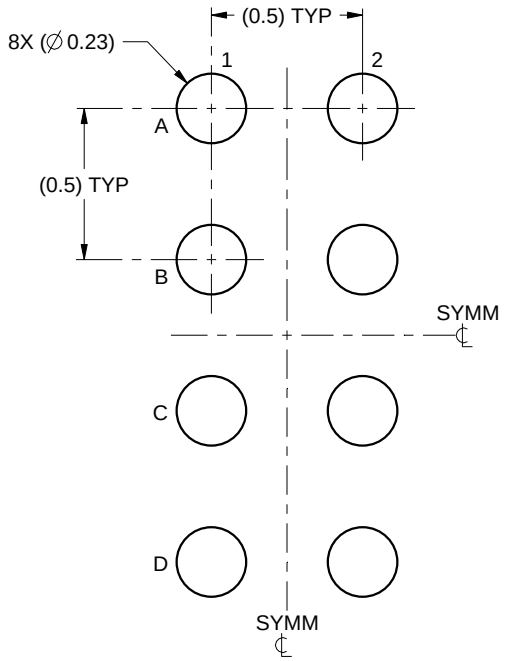

LAND PATTERN EXAMPLE
SCALE:40X

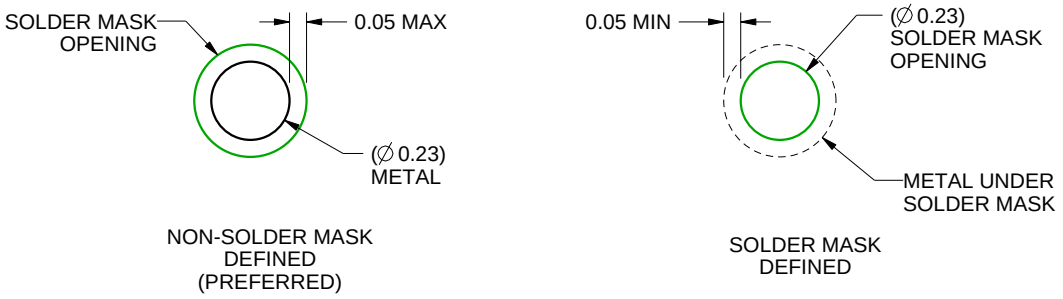

SOLDER MASK DETAILS
NOT TO SCALE

4223082/A 07/2016

NOTES: (continued)

3. Final dimensions may vary due to manufacturing tolerance considerations and also routing constraints.
   For more information, see Texas Instruments literature number SNVA009 (www.ti.com/lit/snva009).

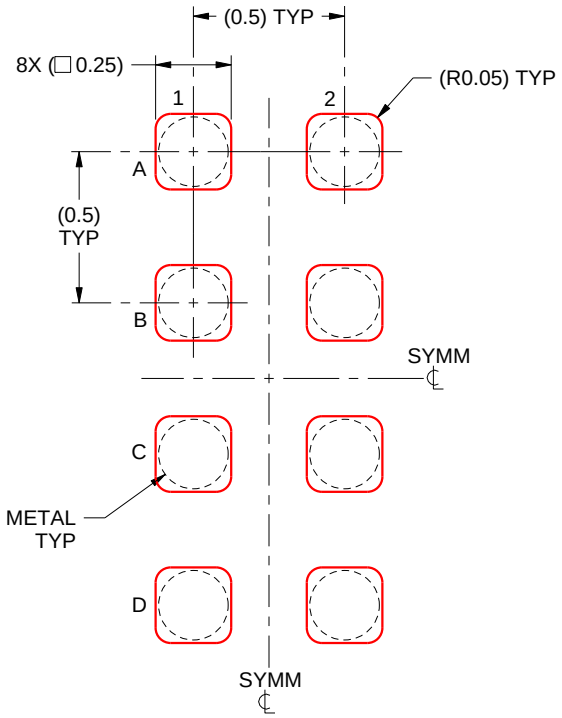

SOLDER PASTE EXAMPLE
BASED ON 0.1 mm THICK STENCIL
SCALE:40X

4223082/A 07/2016

NOTES: (continued)

4. Laser cutting apertures with trapezoidal walls and rounded corners may offer better paste release.

重要通知和免责声明

TI“按原样”提供技术和可靠性数据（包括数据表）、设计资源（包括参考设计）、应用或其他设计建议、网络工具、安全信息和其他资源，不保证没有瑕疵且不做出任何明示或暗示的担保，包括但不限于对适销性、与某特定用途的适用性或不侵犯任何第三方知识产权的暗示担保。

这些资源可供使用 TI 产品进行设计的熟练开发人员使用。您将自行承担以下全部责任：(1) 针对您的应用选择合适的 TI 产品，(2) 设计、验证并测试您的应用，(3) 确保您的应用满足相应标准以及任何其他安全、安保法规或其他要求。

这些资源如有变更，恕不另行通知。TI 授权您仅可将这些资源用于研发本资源所述的 TI 产品的相关应用。严禁以其他方式对这些资源进行复制或展示。您无权使用任何其他 TI 知识产权或任何第三方知识产权。对于因您对这些资源的使用而对 TI 及其代表造成的任何索赔、损害、成本、损失和债务，您将全额赔偿，TI 对此概不负责。

TI 提供的产品受 TI 销售条款)、TI 通用质量指南 或 ti.com 上其他适用条款或 TI 产品随附的其他适用条款的约束。TI 提供这些资源并不会扩展或以其他方式更改 TI 针对 TI 产品发布的适用的担保或担保免责声明。 除非德州仪器 (TI) 明确将某产品指定为定制产品或客户特定产品，否则其产品均为按确定价格收入目录的标准通用器件。

TI 反对并拒绝您可能提出的任何其他或不同的条款。

版权所有 © 2026，德州仪器 (TI) 公司

最后更新日期：2025 年 10 月