TPS650330-Q1 汽车摄像头 PMIC

1 特性

- 符合汽车应用要求
- 符合 AEC-Q100 1 级标准
  - –40°C 至 125°C 环境工作温度范围
- 三个降压转换器：
  - BUCK1 V_{IN} 范围为 4.0V 至 18.3V
  - BUCK1 V_{OUT} 范围为 2.5V 至 4.0V
  - BUCK1 输出电流高达 1500mA
  - BUCK2 和 BUCK3 V_{IN} 范围为 2.5 V 至 5.5V
  - BUCK2 和 BUCK3 V_{OUT} 范围为 0.9V 至 1.9V
  - BUCK2 and BUCK3 输出电流高达 1200mA
  - 用于降低 EMI 的扩频时钟 (SSC) 发生器
  - 2.3MHz 强制固定开关频率 PWM 模式工作
- 一个低压降 (LDO) 稳压器：
  - V_{IN} 范围为 2.5 V 至 5.5V
  - V_{OUT} 范围为 1.8V 至 3.3V
  - 低噪声和高 PSRR
  - 可通过 I^2C 调节的输出电压
  - 高达 300mA 的输出电流
- 具有可湿性侧面的 4.0mm × 4.0mm 24 引脚 VQFN 封装

2 应用

- 汽车摄像头模块
  - 环视摄像头模块
  - 后视摄像头模块
  - 驾驶员监控摄像头模块
  - 同轴电缆供电 (POC) 摄像头模块
  - 电子视镜摄像头模块
  - 前视摄像头模块

3 说明

TPS650330-Q1 器件是一种高度集成的电源管理 IC，可适用于汽车摄像头模块。此器件包含三个降压转换器和一个低压降 (LDO) 稳压器。BUCK1 降压转换器的输入电压范围高达 18.3V，用于连接到同轴电缆 (PoC)。所有转换器都在强制固定频率 PWM 模式下工作。LDO 可提供 300mA 电流，并可在 2.5 V 至 5.5V 的输入电压范围内正常运行。降压转换器和 LDO 具有独立的电压输入，可实现最大的设计和排序灵活性。

TPS650330-Q1 采用 24 引脚 VQFN 封装 (4.00mm × 4.00mm)。

器件信息

器件型号(1)	封装	封装尺寸（标称值）
TPS650330-Q1	VQFN (24)	4.00mm × 4.00mm

(1) 如需了解所有可用封装，请参阅数据表末尾的可订购产品附录。

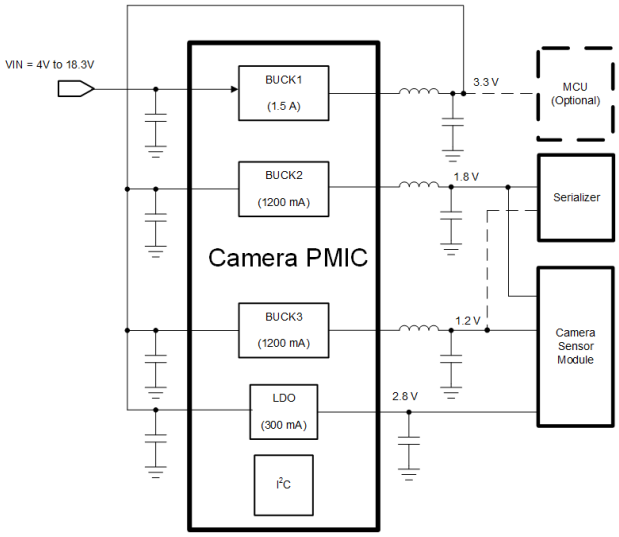

TPS650330-Q1 应用电路

本文档旨在为方便起见，提供有关 TI 产品中文版本的信息，以确认产品的概要。有关适用的官方英文版本的最新信息，请访问 www.ti.com，其内容始终优先。TI 不保证翻译的准确性和有效性。在实际设计之前，请务必参考最新版本的英文版本。

Table of Contents

1 特性..... 1
2 应用..... 1
3 说明..... 1
4 Revision History..... 2
5 Device and Documentation Support..... 3
5.1 Device Support..... 3
5.2 接收文档更新通知..... 3
5.3 支持资源..... 3
5.4 Trademarks..... 3
5.5 静电放电警告..... 3
5.6 术语表..... 3

4 Revision History

注：以前版本的页码可能与当前版本的页码不同

Changes from Revision A (December 2021) to Revision B (February 2023)	Page
• 将器件状态从“预告信息”更改为“量产数据”	1

Changes from Revision * (April 2019) to Revision A (December 2021)	Page
• 更新了整个文档中的表格、图和交叉参考的编号格式	1

Copyright © 2023 Texas Instruments Incorporated

5 Device and Documentation Support

5.1 Device Support

5.1.1 第三方产品免责声明

TI 发布的与第三方产品或服务有关的信息，不能构成与此类产品或服务或保修的适用性有关的认可，不能构成此类产品或服务单独或与任何 TI 产品或服务一起的表示或认可。

5.2 接收文档更新通知

要接收文档更新通知，请导航至 ti.com 上的器件产品文件夹。点击*订阅更新* 进行注册，即可每周接收产品信息更改摘要。有关更改的详细信息，请查看任何已修订文档中包含的修订历史记录。

5.3 支持资源

TI E2E™ 支持论坛是工程师的重要参考资料，可直接从专家获得快速、经过验证的解答和设计帮助。搜索现有解答或提出自己的问题可获得所需的快速设计帮助。

链接的内容由各个贡献者“按原样”提供。这些内容并不构成 TI 技术规范，并且不一定反映 TI 的观点；请参阅 TI 的《使用条款》。

5.4 Trademarks

TI E2E™ is a trademark of Texas Instruments.
所有商标均为其各自所有者的财产。

5.5 静电放电警告

静电放电 (ESD) 会损坏这个集成电路。德州仪器 (TI) 建议通过适当的预防措施处理所有集成电路。如果不遵守正确的处理和安装程序，可能会损坏集成电路。

ESD 的损坏小至导致微小的性能降级，大至整个器件故障。精密的集成电路可能更容易受到损坏，这是因为非常细微的参数更改都可能会导致器件与其发布的规格不相符。

5.6 术语表

TI 术语表	本术语表列出并解释了术语、首字母缩略词和定义。

PACKAGING INFORMATION

Orderable part number	Status (1)	Material type (2)	Package | Pins	Package qty | Carrier	RoHS (3)	Lead finish/ Ball material (4)	MSL rating/ Peak reflow (5)	Op temp (°C)	Part marking (6)
TPS65033000RGERQ1	Active	Production	VQFN (RGE) | 24	3000 | LARGE T&R	Yes	NIPDAU | SN	Level-3-260C-168 HR	-40 to 125	TPS6503 3000-Q1
TPS65033000RGERQ1.A	Active	Production	VQFN (RGE) | 24	3000 | LARGE T&R	Yes	NIPDAU	Level-3-260C-168 HR	-40 to 125	TPS6503 3000-Q1
TPS65033007RGERQ1	Active	Production	VQFN (RGE) | 24	3000 | LARGE T&R	Yes	NIPDAU | SN	Level-3-260C-168 HR	-40 to 125	TPS6503 3007-Q1
TPS65033007RGERQ1.A	Active	Production	VQFN (RGE) | 24	3000 | LARGE T&R	Yes	NIPDAU	Level-3-260C-168 HR	-40 to 125	TPS6503 3007-Q1
TPS6503300DRGERQ1	Active	Production	VQFN (RGE) | 24	3000 | LARGE T&R	Yes	NIPDAU | SN	Level-3-260C-168 HR	-40 to 125	TPS6503 300D-Q1
TPS6503300DRGERQ1.A	Active	Production	VQFN (RGE) | 24	3000 | LARGE T&R	Yes	NIPDAU	Level-3-260C-168 HR	-40 to 125	TPS6503 300D-Q1
TPS6503300ERGERQ1	Active	Production	VQFN (RGE) | 24	3000 | LARGE T&R	Yes	NIPDAU | SN	Level-3-260C-168 HR	-40 to 125	TPS6503 300E-Q1
TPS6503300ERGERQ1.A	Active	Production	VQFN (RGE) | 24	3000 | LARGE T&R	Yes	NIPDAU	Level-3-260C-168 HR	-40 to 125	TPS6503 300E-Q1
TPS6503300IQRGERQ1	Active	Production	VQFN (RGE) | 24	3000 | LARGE T&R	Yes	NIPDAU | SN	Level-3-260C-168 HR	-40 to 125	TPS6503 300I-Q1
TPS6503300IQRGERQ1.A	Active	Production	VQFN (RGE) | 24	3000 | LARGE T&R	Yes	NIPDAU	Level-3-260C-168 HR	-40 to 125	TPS6503 300I-Q1
TPS6503300JRGERQ1	Active	Production	VQFN (RGE) | 24	3000 | LARGE T&R	Yes	NIPDAU | SN	Level-3-260C-168 HR	-40 to 125	TPS6503 300J-Q1
TPS6503300JRGERQ1.A	Active	Production	VQFN (RGE) | 24	3000 | LARGE T&R	Yes	NIPDAU	Level-3-260C-168 HR	-40 to 125	TPS6503 300J-Q1

(1) **Status:** For more details on status, see our product life cycle.

(2) **Material type:** When designated, preproduction parts are prototypes/experimental devices, and are not yet approved or released for full production. Testing and final process, including without limitation quality assurance, reliability performance testing, and/or process qualification, may not yet be complete, and this item is subject to further changes or possible discontinuation. If available for ordering, purchases will be subject to an additional waiver at checkout, and are intended for early internal evaluation purposes only. These items are sold without warranties of any kind.

(3) **RoHS values:** Yes, No, RoHS Exempt. See the TI RoHS Statement for additional information and value definition.

(4) **Lead finish/Ball material:** Parts may have multiple material finish options. Finish options are separated by a vertical ruled line. Lead finish/Ball material values may wrap to two lines if the finish value exceeds the maximum column width.

(5) **MSL rating/Peak reflow:** The moisture sensitivity level ratings and peak solder (reflow) temperatures. In the event that a part has multiple moisture sensitivity ratings, only the lowest level per JEDEC standards is shown. Refer to the shipping label for the actual reflow temperature that will be used to mount the part to the printed circuit board.

(6) **Part marking:** There may be an additional marking, which relates to the logo, the lot trace code information, or the environmental category of the part.

Multiple part markings will be inside parentheses. Only one part marking contained in parentheses and separated by a "~" will appear on a part. If a line is indented then it is a continuation of the previous line and the two combined represent the entire part marking for that device.

Important Information and Disclaimer: The information provided on this page represents TI's knowledge and belief as of the date that it is provided. TI bases its knowledge and belief on information provided by third parties, and makes no representation or warranty as to the accuracy of such information. Efforts are underway to better integrate information from third parties. TI has taken and continues to take reasonable steps to provide representative and accurate information but may not have conducted destructive testing or chemical analysis on incoming materials and chemicals. TI and TI suppliers consider certain information to be proprietary, and thus CAS numbers and other limited information may not be available for release.

In no event shall TI's liability arising out of such information exceed the total purchase price of the TI part(s) at issue in this document sold by TI to Customer on an annual basis.

RGE 24 VQFN - 1 mm max height

PLASTIC QUAD FLATPACK - NO LEAD

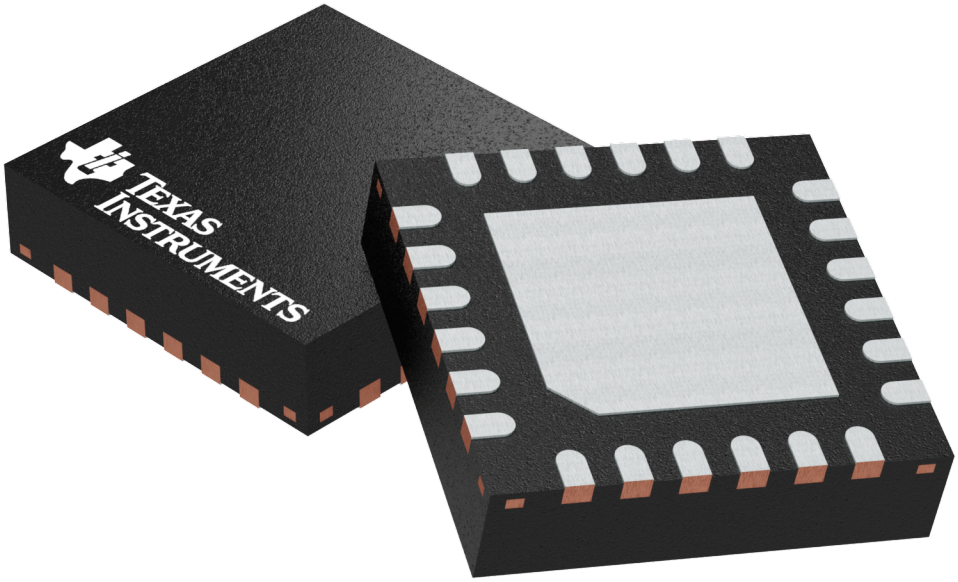

Images above are just a representation of the package family, actual package may vary.
Refer to the product data sheet for package details.

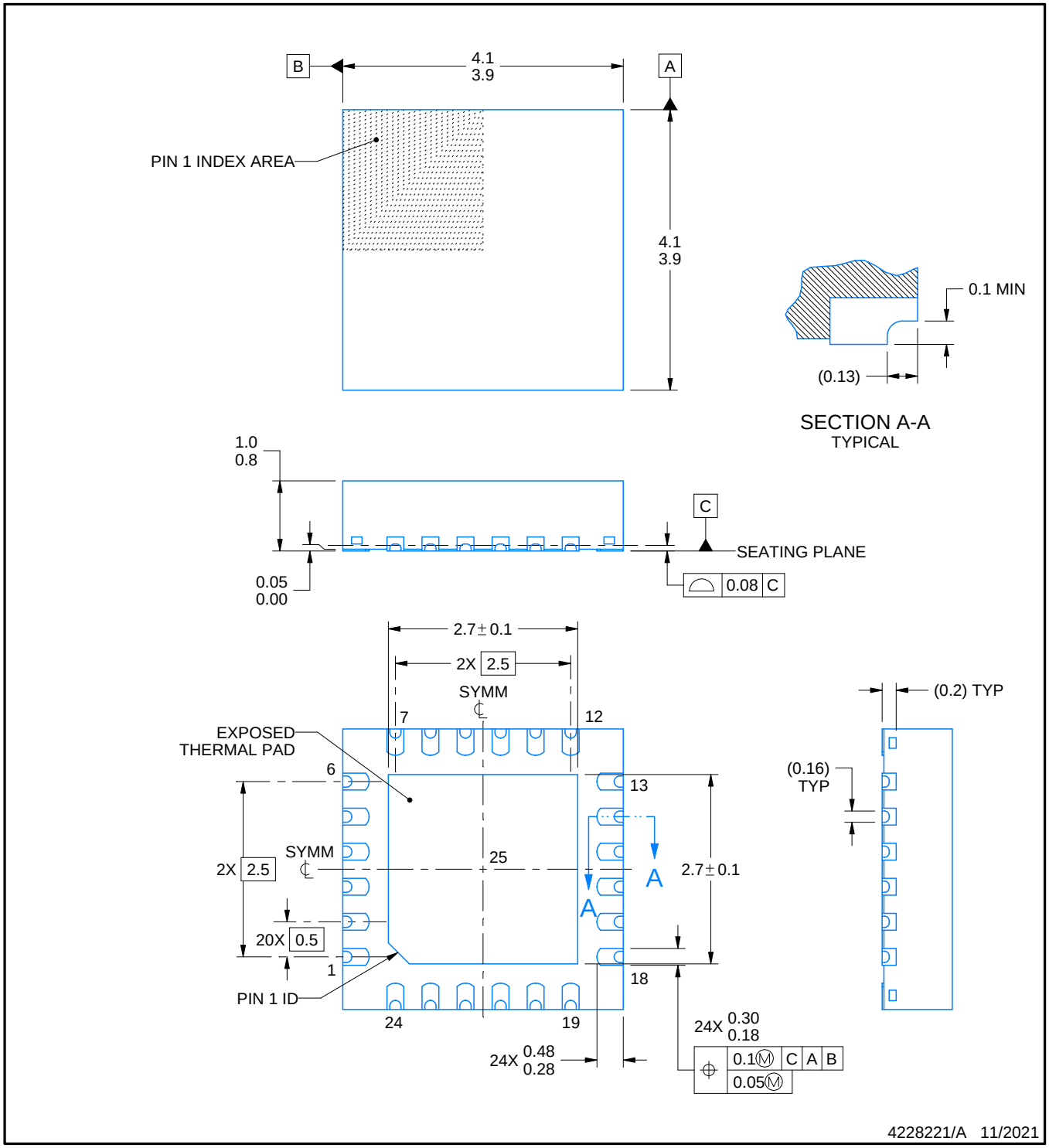

NOTES:

1. All linear dimensions are in millimeters. Any dimensions in parenthesis are for reference only. Dimensioning and tolerancing per ASME Y14.5M.
2. This drawing is subject to change without notice.
3. The package thermal pad must be soldered to the printed circuit board for thermal and mechanical performance.

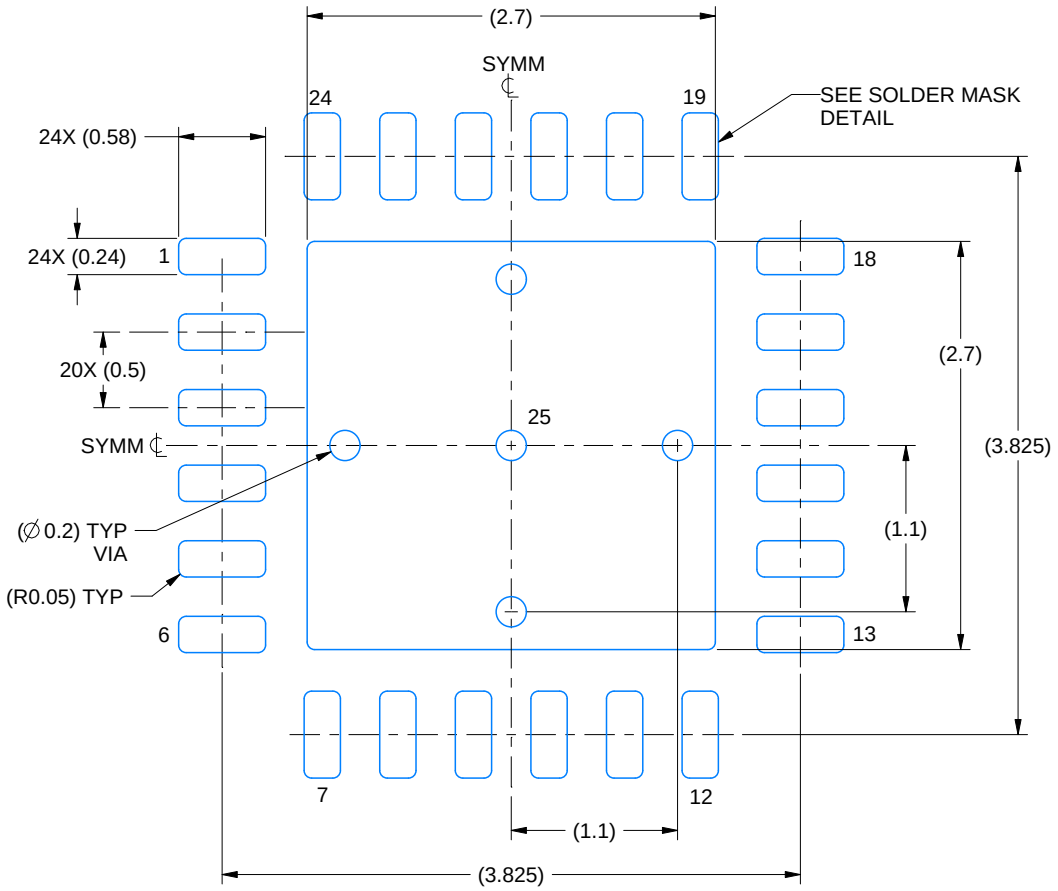

LAND PATTERN EXAMPLE
EXPOSED METAL SHOWN
SCALE: 20X

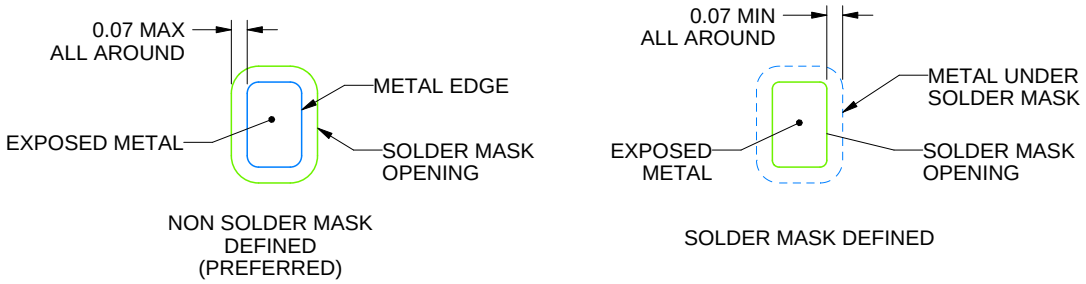

SOLDER MASK DETAILS

4228221/A 11/2021

NOTES: (continued)

4. This package is designed to be soldered to a thermal pad on the board. For more information, see Texas Instruments literature number SLUA271 (www.ti.com/lit/slua271).
5. Vias are optional depending on application, refer to device data sheet. If any vias are implemented, refer to their locations shown on this view. It is recommended that vias under paste be filled, plugged or tented.

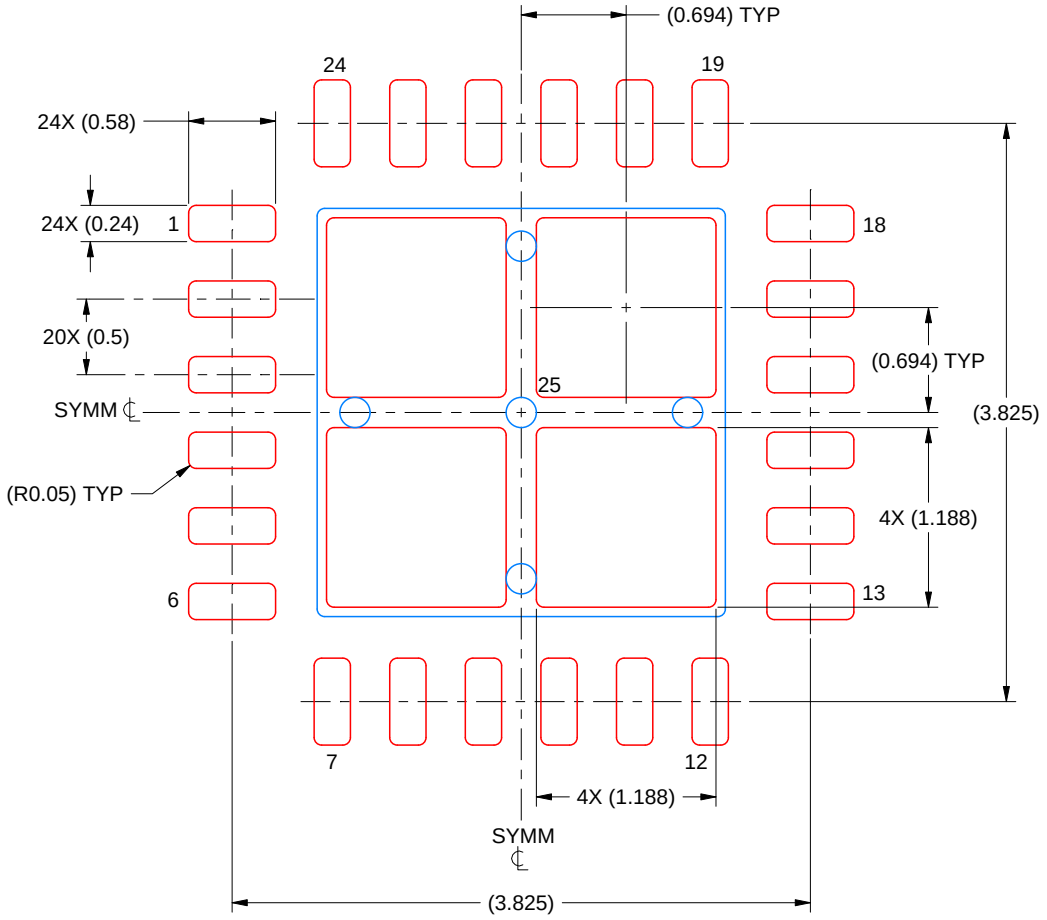

SOLDER PASTE EXAMPLE
BASED ON 0.125 MM THICK STENCIL
SCALE: 20X

EXPOSED PAD 25
77% PRINTED SOLDER COVERAGE BY AREA UNDER PACKAGE

4228221/A 11/2021

NOTES: (continued)

6. Laser cutting apertures with trapezoidal walls and rounded corners may offer better paste release. IPC-7525 may have alternate design recommendations.

PACKAGE OUTLINE

RGE0024K

VQFN - 1 mm max height

PLASTIC QUAD FLATPACK - NO LEAD

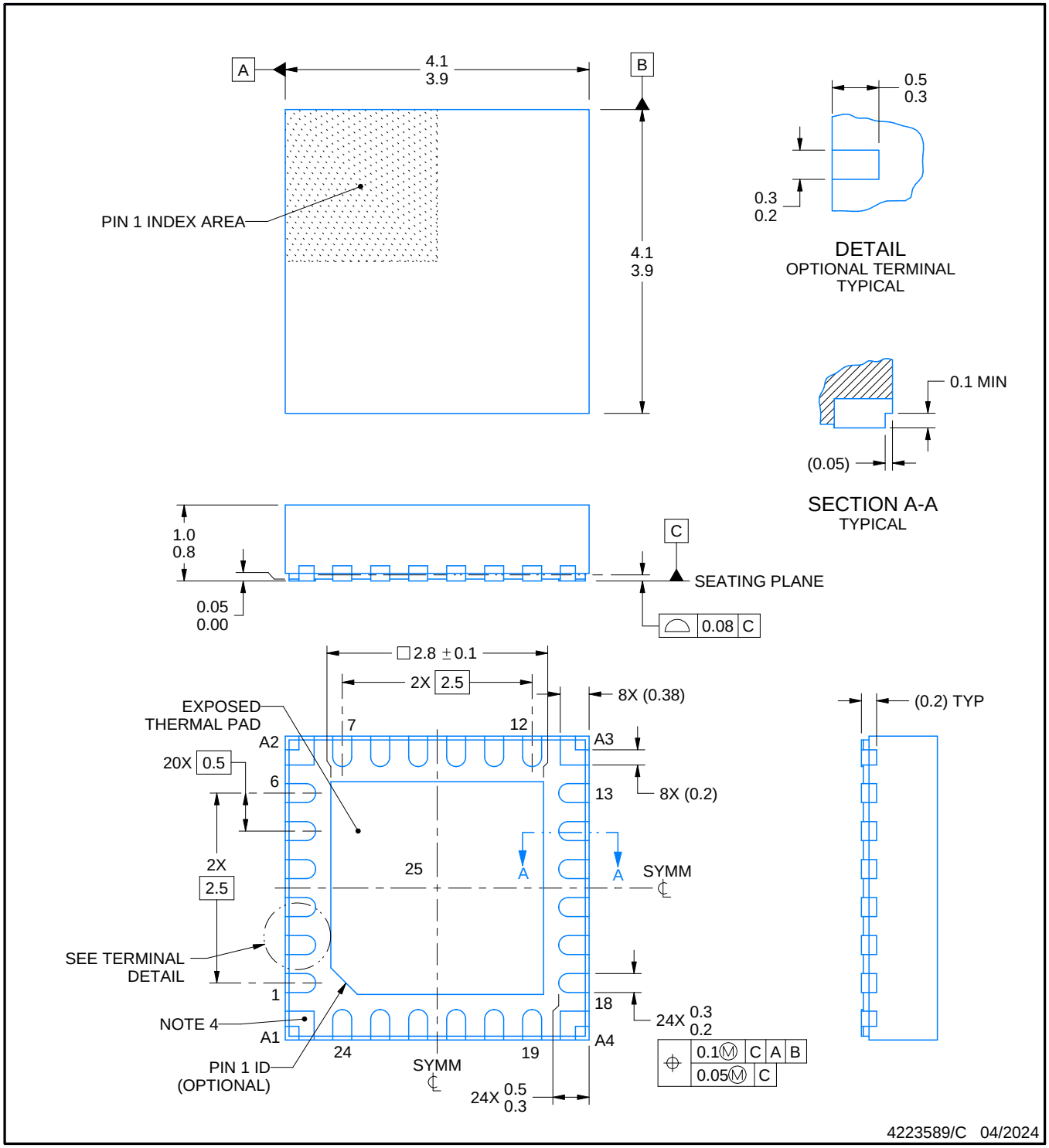

NOTES:

1. All linear dimensions are in millimeters. Any dimensions in parenthesis are for reference only. Dimensioning and tolerancing per ASME Y14.5M.
2. This drawing is subject to change without notice.
3. The package thermal pad must be soldered to the printed circuit board for thermal and mechanical performance.
4. Corner pins A1-A4 are physically connected to exposed thermal pad internally. Soldering these is optional, but would require customer to supply land design and stencil.

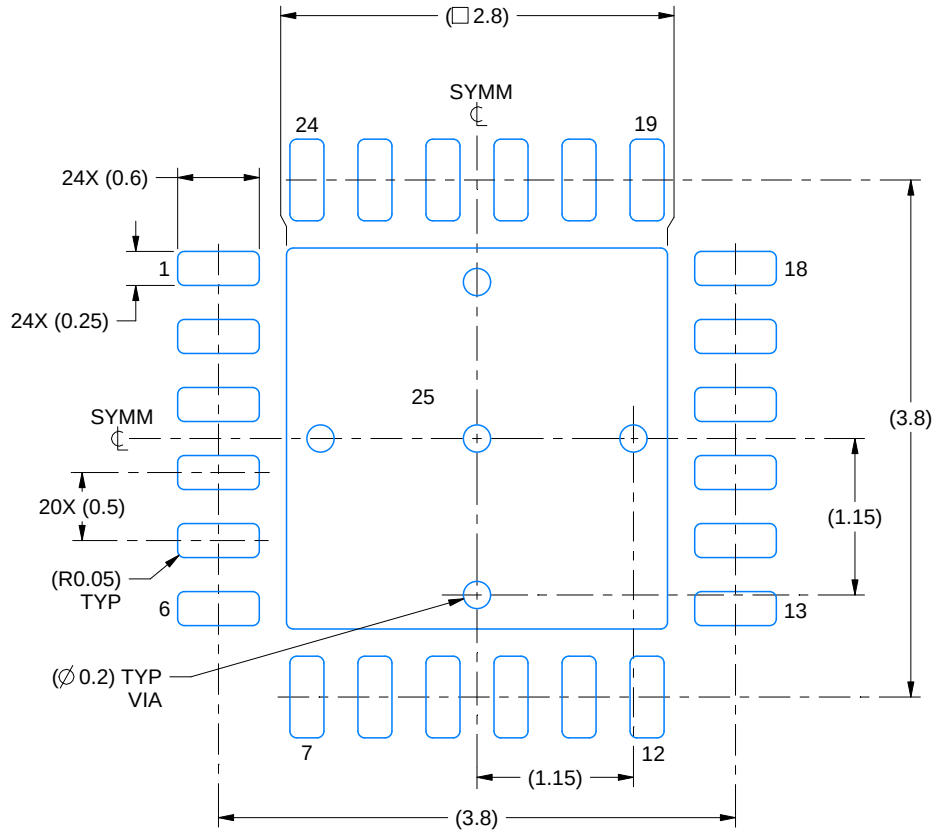

LAND PATTERN EXAMPLE
EXPOSED METAL SHOWN
SCALE:18X

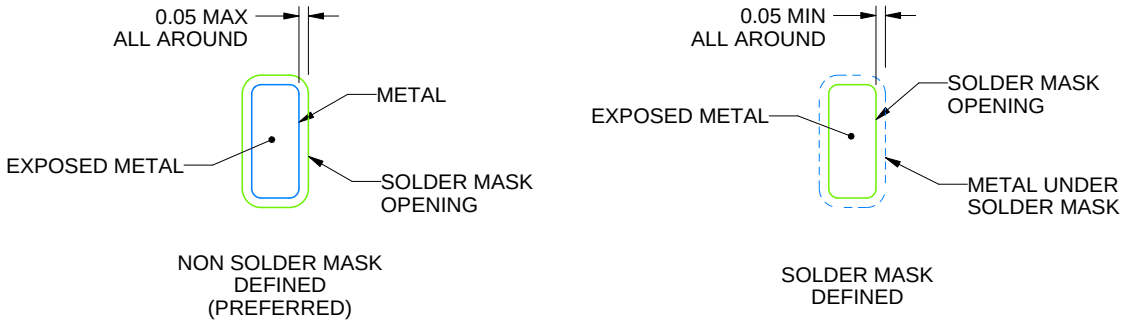

SOLDER MASK DETAILS

4223589/C 04/2024

NOTES: (continued)

5. This package is designed to be soldered to a thermal pad on the board. For more information, see Texas Instruments literature number SLUA271 (www.ti.com/lit/slua271).
6. Vias are optional depending on application, refer to device data sheet. If any vias are implemented, refer to their locations shown on this view. It is recommended that vias under paste be filled, plugged or tented.

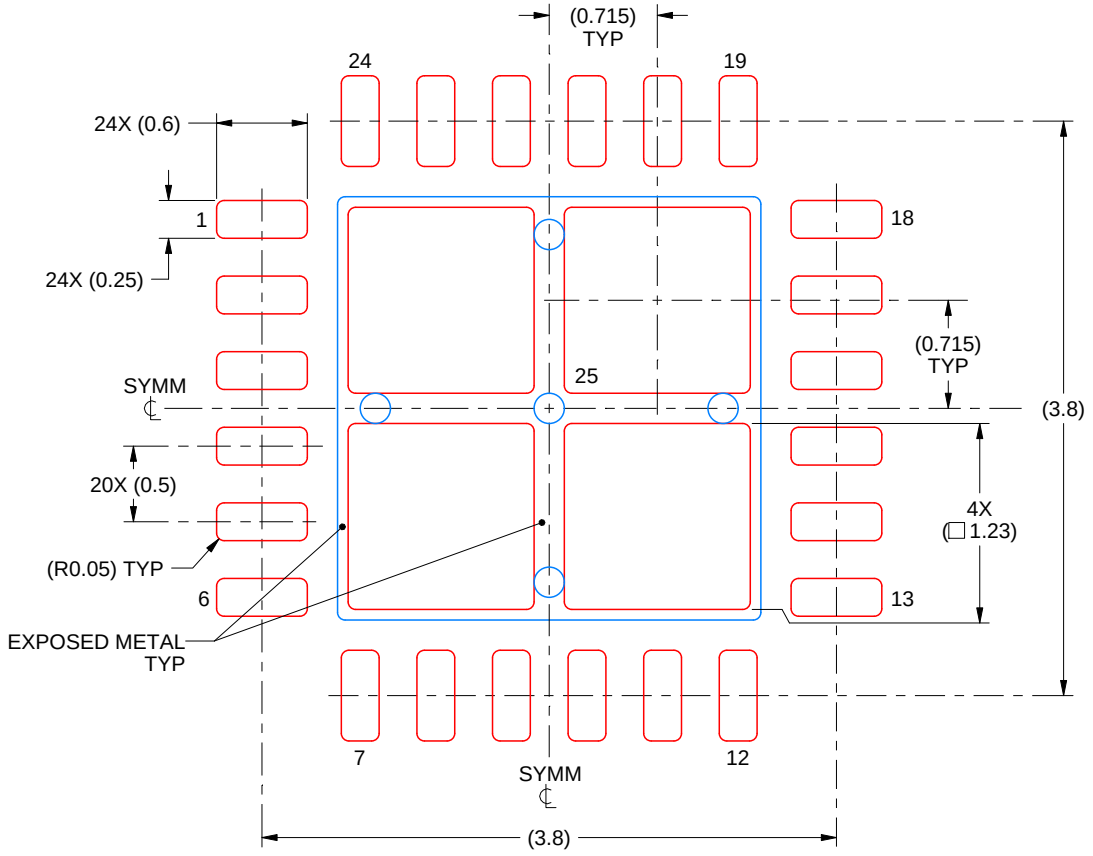

SOLDER PASTE EXAMPLE
BASED ON 0.1 mm THICK STENCIL

THERMAL PAD 25:
77% PRINTED SOLDER COVERAGE BY AREA UNDER PACKAGE
SCALE:20X

4223589/C 04/2024

NOTES: (continued)

7. Laser cutting apertures with trapezoidal walls and rounded corners may offer better paste release. IPC-7525 may have alternate design recommendations.

重要通知和免责声明

TI“按原样”提供技术和可靠性数据（包括数据表）、设计资源（包括参考设计）、应用或其他设计建议、网络工具、安全信息和其他资源，不保证没有瑕疵且不做出任何明示或暗示的担保，包括但不限于对适销性、与某特定用途的适用性或不侵犯任何第三方知识产权的暗示担保。

这些资源可供使用 TI 产品进行设计的熟练开发人员使用。您将自行承担以下全部责任：(1) 针对您的应用选择合适的 TI 产品，(2) 设计、验证并测试您的应用，(3) 确保您的应用满足相应标准以及任何其他安全、安保法规或其他要求。

这些资源如有变更，恕不另行通知。TI 授权您仅可将这些资源用于研发本资源所述的 TI 产品的相关应用。严禁以其他方式对这些资源进行复制或展示。您无权使用任何其他 TI 知识产权或任何第三方知识产权。对于因您对这些资源的使用而对 TI 及其代表造成的任何索赔、损害、成本、损失和债务，您将全额赔偿，TI 对此概不负责。

TI 提供的产品受 TI 销售条款)、TI 通用质量指南 或 ti.com 上其他适用条款或 TI 产品随附的其他适用条款的约束。TI 提供这些资源并不会扩展或以其他方式更改 TI 针对 TI 产品发布的适用的担保或担保免责声明。 除非德州仪器 (TI) 明确将某产品指定为定制产品或客户特定产品，否则其产品均为按确定价格收入目录的标准通用器件。

TI 反对并拒绝您可能提出的任何其他或不同的条款。

版权所有 © 2025，德州仪器 (TI) 公司

最后更新日期：2025 年 10 月