# 具有注入电流控制功能的 TMUX13xx 5V 双向 8:1 单通道和 4:1 双通道多路复用器

## 1 特性

- 注入电流控制
- 反向供电保护
  - 无到 $V_{DD}$ 的 ESD 二极管路径
- 宽电源电压范围：1.62V 至 5.5V
- 低电容
- 双向信号路径
- 轨到轨运行
- 兼容 1.8V 逻辑电平
- 失效防护逻辑
- 先断后合开关
- 提供功能安全型
  - 可提供用于功能安全系统设计的文档
- TMUX1308 - 与以下器件引脚兼容：
  - 业界通用的 4051 和 4851 多路复用器
- TMUX1309 - 与以下器件引脚兼容：
  - 业界通用的 4052 和 4852 多路复用器

## 2 应用

- 模拟和数字多路复用和多路信号分离
- 诊断和监控
- 数据中心交换机
- 远程无线电单元 (RRU)
- 机架式服务器
- 电表
- 电器
- 空调机
- 多功能打印机
- 串式逆变器
- IP 网络摄像头
- 点钞机
- 非公路用车控制系统

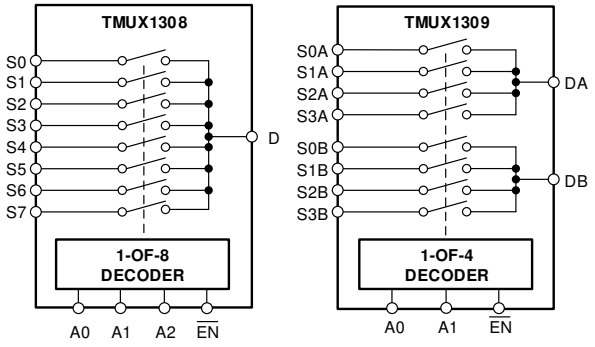


**TMUX1308 和 TMUX1309 方框图**

## 3 说明

TMUX1308 和 TMUX1309 为通用互补金属氧化物半导体 (CMOS) 多路复用器 (MUX)。TMUX1308 是 8:1 单通道（单端）多路复用器，而 TMUX1309 是 4:1 双通道（差分）多路复用器。这些器件可在源极 (Sx) 和漏极 (Dx) 引脚上支持从 GND 到 $V_{DD}$ 范围的双向模拟和数字信号。

TMUX13xx 器件具有内部注入电流控制功能，从而无需外部二极管和电阻器网络（通常用于保护开关并使输入信号保持在电源电压范围之内）。内部注入电流控制电路允许禁用信号路径上的信号超过电源电压，而不会影响启用信号路径的信号。此外，TMUX13xx 器件没有到电源引脚的内部二极管路径，从而消除了损坏连接到电源引脚的元件或为电源轨提供意外电源的风险。

所有逻辑输入均具有兼容 1.8 V 逻辑的阈值，在有效电源电压下运行时，这些阈值可确保 TTL 和 CMOS 逻辑兼容性。失效防护逻辑电路允许先在控制引脚上施加电压，然后在电源引脚上施加电压，从而保护器件免受潜在的损害。

**封装信息**(1)(2)

| 器件型号 | 封装 | 封装尺寸（标称值） |
|---|---|---|
| TMUX1308<br>TMUX1309 | PW（TSSOP，16） | 5.00mm × 4.40mm |
| | DYY（SOT-23-THIN，16） | 4.20mm × 2.00mm |
| | BQB（WQFN，16） | 3.50mm × 2.50mm |

(1) 如需了解所有可用封装，请参阅数据表末尾的封装选项附录。
(2) 请参阅*器件比较表*。

本文档旨在为方便起见，提供有关 TI 产品中文版本的信息，以确认产品的概要。有关适用的官方英文版本的最新信息，请访问 www.ti.com，其内容始终优先。TI 不保证翻译的准确性和有效性。在实际设计之前，请务必参考最新版本的英文版本。
English Data Sheet: SCDS426

## Table of Contents

**1 特性** ... 1
**2 应用** ... 1
**3 说明** ... 1
**4 Revision History** ... 2
**5 Device Comparison Table** ... 3
**6 Pin Configuration and Functions** ... 3
**7 Specifications** ... 7
7.1 Absolute Maximum Ratings ... 7
7.2 ESD Ratings ... 7
7.3 Recommended Operating Conditions ... 7
7.4 Thermal Information: TMUX1308 ... 8
7.5 Thermal Information: TMUX1309 ... 8
7.6 Electrical Characteristics ... 9
7.7 Logic and Dynamic Characteristics ... 10
7.8 Timing Characteristics ... 11
7.9 Injection Current Coupling ... 12
7.10 Typical Characteristics ... 13
**8 Parameter Measurement Information** ... 16
8.1 On-Resistance ... 16
8.2 Off-Leakage Current ... 16
8.3 On-Leakage Current ... 17
8.4 Transition Time ... 17
8.5 Break-Before-Make ... 18
8.6 $t_{ON(EN)}$ and $t_{OFF(EN)}$ ... 18
8.7 Charge Injection ... 19
8.8 Off Isolation ... 19
8.9 Crosstalk ... 20
8.10 Bandwidth ... 20
8.11 Injection Current Control ... 21
**9 Detailed Description** ... 22
9.1 Overview ... 22
9.2 Functional Block Diagram ... 22
9.3 Feature Description ... 22
9.4 Device Functional Modes ... 26
9.5 Truth Tables ... 26
**10 Application and Implementation** ... 28
10.1 Application Information ... 28
10.2 Typical Application ... 28
10.3 Design Requirements ... 29
10.4 Detailed Design Procedure ... 29
**11 Power Supply Recommendations** ... 29
**12 Layout** ... 29
12.1 Layout Guidelines ... 29
12.2 Layout Example ... 30
**13 Device and Documentation Support** ... 31
13.1 Documentation Support ... 31
13.2 Receiving Notification of Documentation Updates ... 31
13.3 支持资源 ... 31
13.4 Trademarks ... 31
13.5 Electrostatic Discharge Caution ... 31
13.6 术语表 ... 31
**14 Mechanical, Packaging, and Orderable Information** ... 31

## 4 Revision History

注：以前版本的页码可能与当前版本的页码不同

| Changes from Revision D (November 2020) to Revision E (October 2022) | Page |
|---|---|
| • Updated the *Injection Current Control* section | 23 |

| Changes from Revision C (August 2020) to Revision D (November 2020) | Page |
|---|---|
| • 将 TMUX1309 器件的状态从预发布更改为量产 | 1 |
| • Changed $\Delta R_{ON}$ test condition to $V_{DD}$ / 2 | 9 |
| • Changed max $\Delta R_{ON}$ spec limit for 1.8 V and 2.5 V supply | 9 |

| Changes from Revision B (August 2020) to Revision C (August 2020) | Page |
|---|---|
| • 更新了整个文档中的表格、图和交叉参考的编号格式 | 1 |
| • Added the Typical Characteristics | 13 |

| Changes from Revision A (June 2020) to Revision B (August 2020) | Page |
|---|---|
| • Added thermal information for TMUX1309 | 8 |

| Changes from Revision * (March 2020) to Revision A (June 2020) | Page |
|---|---|


Copyright © 2022 Texas Instruments Incorporated

## 5 Device Comparison Table

| PRODUCT | DESCRIPTION |
|---|---|
| TMUX1308 | 8:1, 1-channel, single-ended multiplexer |
| TMUX1309 | 4:1, 2-channel, differential multiplexer |

## 6 Pin Configuration and Functions

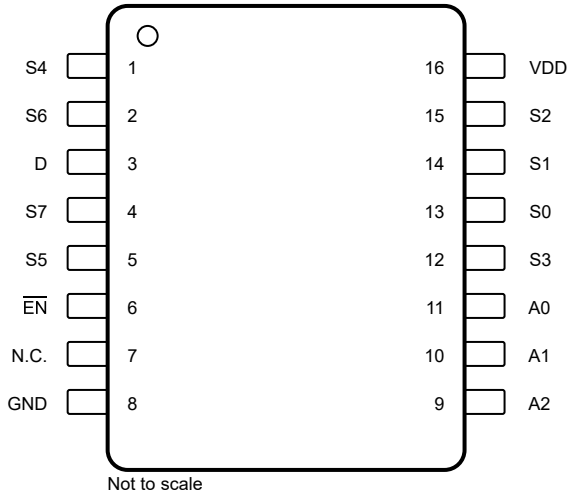


图 6-1. TMUX1308: PW Package, 16-Pin TSSOP (Top View)

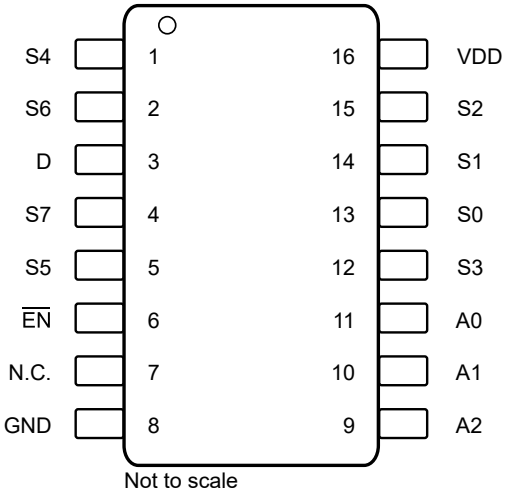


图 6-2. TMUX1308: DYY Package, 16-Pin SOT-23-THIN (Top View)

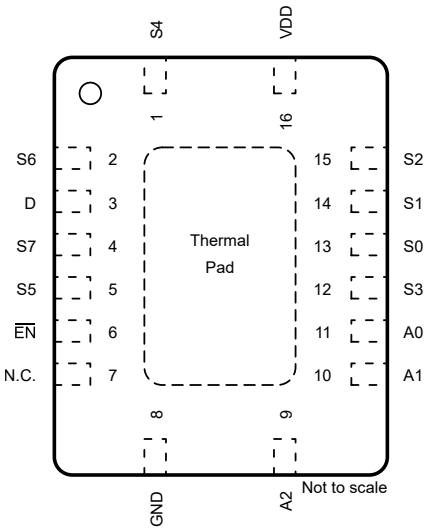


图 6-3. TMUX1308: BQB Package, 16-Pin WQFN (Top View)

## 表 6-1. Pin Functions TMUX1308

| PIN | | TYPE[1] | DESCRIPTION[2] |
|---|---|---|---|
| NAME | NO. | | |
| S4 | 1 | I/O | Source pin 4. Signal path can be an input or output. |
| S6 | 2 | I/O | Source pin 6. Signal path can be an input or output. |
| D | 3 | I/O | Drain pin (common). Signal path can be an input or output. |
| S7 | 4 | I/O | Source pin 7. Signal path can be an input or output. |
| S5 | 5 | I/O | Source pin 5. Signal path can be an input or output. |
| $\overline{EN}$ | 6 | I | Active low logic input. When this pin is high, all switches are turned off. When this pin is low, the A[2:0] address inputs determine which switch is turned on as listed in 表 9-1. |
| N.C. | 7 | Not Connected | Not internally connected. |
| GND | 8 | P | Ground (0 V) reference |
| A2 | 9 | I | Address line 2. Controls the switch configuration as listed in 表 9-1. |
| A1 | 10 | I | Address line 1. Controls the switch configuration as listed in 表 9-1. |
| A0 | 11 | I | Address line 0. Controls the switch configuration as listed in 表 9-1. |
| S3 | 12 | I/O | Source pin 3. Signal path can be an input or output. |
| S0 | 13 | I/O | Source pin 0. Signal path can be an input or output. |
| S1 | 14 | I/O | Source pin 1. Signal path can be an input or output. |
| S2 | 15 | I/O | Source pin 2. Signal path can be an input or output. |
| VDD | 16 | P | Positive power supply. This pin is the most positive power-supply potential. For reliable operation, connect a decoupling capacitor ranging from 0.1 µF to 10 µF between $V_{DD}$ and GND. |
| Thermal pad | | — | Exposed thermal pad with conductive die attached. No requirement to solder this pad. If connected, then it should be left floating or tied to GND. |

(1) I = input, O = output, I/O = input and output, P = power.
(2) For what to do with unused pins, refer to 节 9.4.


Copyright © 2022 Texas Instruments Incorporated

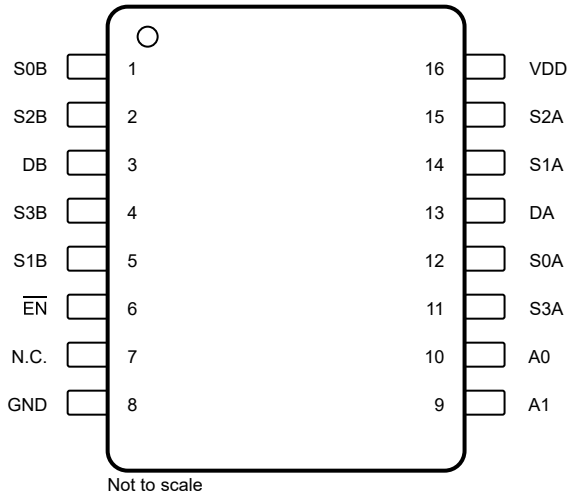


**图 6-4. TMUX1309: PW Package, 16-Pin TSSOP (Top View)**

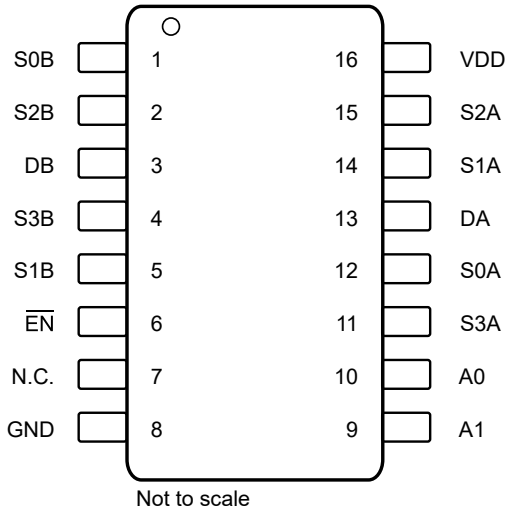


**图 6-5. TMUX1309: DYY Package, 16-Pin SOT-23-THIN (Top View)**

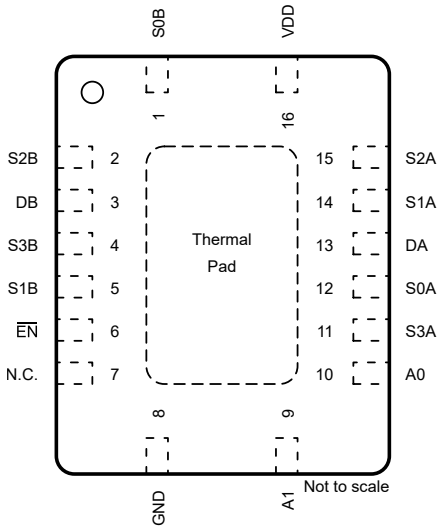


**图 6-6. TMUX1309: BQB Package, 16-Pin WQFN (Top View)**

## 表 6-2. Pin Functions TMUX1309

| PIN | | TYPE[1] | DESCRIPTION[2] |
|---|---|---|---|
| NAME | NO. | | |
| S0B | 1 | I/O | Source pin 0 of mux B. Can be an input or output. |
| S2B | 2 | I/O | Source pin 2 of mux B. Can be an input or output. |
| DB | 3 | I/O | Drain pin (Common) of mux B. Can be an input or output. |
| S3B | 4 | I/O | Source pin 3 of mux B. Can be an input or output. |
| S1B | 5 | I/O | Source pin 1 of mux B. Can be an input or output. |
| $\overline{EN}$ | 6 | I | Active low logic input. When this pin is high, all switches are turned off. When this pin is low, the A[1:0] address inputs determine which switch is turned on. |
| N.C. | 7 | Not Connected | Not internally connected. |
| GND | 8 | P | Ground (0 V) reference |
| A1 | 9 | I | Address line 1. Controls the switch configuration as listed in 表 9-2. |
| A0 | 10 | I | Address line 0. Controls the switch configuration as listed in 表 9-2. |
| S3A | 11 | I/O | Source pin 3 of mux A. Can be an input or output. |
| S0A | 12 | I/O | Source pin 0 of mux A. Can be an input or output. |
| DA | 13 | I/O | Drain pin (Common) of mux A. Can be an input or output. |
| S1A | 14 | I/O | Source pin 1 of mux A. Can be an input or output. |
| S2A | 15 | I/O | Source pin 2 of mux A. Can be an input or output. |
| VDD | 16 | P | Positive power supply. This pin is the most positive power-supply potential. For reliable operation, connect a decoupling capacitor ranging from 0.1 µF to 10 µF between $V_{DD}$ and GND. |
| Thermal pad | | — | Exposed thermal pad with conductive die attached. No requirement to solder this pad. If connected, then it should be left floating or tied to GND. |

(1) I = input, O = output, I/O = input and output, P = power.
(2) For what to do with unused pins, refer to 节 9.4.


Copyright © 2022 Texas Instruments Incorporated

# 7 Specifications

## 7.1 Absolute Maximum Ratings

over operating free-air temperature range (unless otherwise noted)[(1) (2) (3)]

| | | MIN | MAX | UNIT |
|---|---|---|---|---|
| $V_{DD}$ | Supply voltage | – 0.5 | 6 | V |
| $V_{SEL}$ or $V_{EN}$ | Logic control input pin voltage ($\overline{EN}$, A0, A1, A2) | – 0.5 | 6 | |
| $V_S$ or $V_D$ | Source or drain voltage (Sx, D) | – 0.5 | $V_{DD}$+0.5 | |
| $I_{SEL}$ or $I_{EN}$ | Logic control input pin current ($\overline{EN}$, A0, A1, A2) | – 30 | 30 | mA |
| $I_S$ or $I_{D\ (CONT)}$ | Continuous current through switch (Sx, D pins) – 40°C to +85°C | – 50 | 50 | |
| $I_S$ or $I_{D\ (CONT)}$ | Continuous current through switch (Sx, D pins) – 40°C to +125°C | – 25 | 25 | |
| $I_{GND}$ | Continuous current through GND | – 100 | 100 | |
| $P_{tot}$ | Total power dissipation[(4)] | | 500 | mW |
| $T_{stg}$ | Storage temperature | – 65 | 150 | °C |
| $T_J$ | Junction temperature | | 150 | |

(1) Operation outside the *Absolute Maximum Ratings* may cause permanent device damage. Absolute maximum ratings do not imply functional operation of the device at these or any other conditions beyond those listed under *Recommended Operating Conditions*. If briefly operating outside the *Recommended Operating Conditions* but within the *Absolute Maximum Ratings*, the device may not sustain damage, but it may not be fully functional. Operating the device in this manner may affect device reliability, functionality, performance, and shorten the device lifetime.
(2) The algebraic convention, whereby the most negative value is a minimum and the most positive value is a maximum.
(3) All voltages are with respect to ground, unless otherwise specified.
(4) For TSSOP package: $P_{tot}$ derates linearly above $T_A$ = 80°C by 7.2mW/°C.
For SOT-23-THIN package: $P_{tot}$ derates linearly above $T_A$ = 66°C by 6mW/°C.
For BQB package: $P_{tot}$ derates linearly above $T_A$ = 102°C by 10.6mW/°C.

## 7.2 ESD Ratings

| | | | VALUE | UNIT |
|---|---|---|---|---|
| $V_{(ESD)}$ | Electrostatic discharge | Human body model (HBM), per ANSI/ESDA/JEDEC JS-001, all pins[(1)] | ±2000 | V |
| | | Charged device model (CDM), per JEDEC specification JESD22-C101 or ANSI/ESDA/JEDEC JS-002, all pins[(2)] | ±750 | |

(1) JEDEC document JEP155 states that 500-V HBM allows safe manufacturing with a standard ESD control process.
(2) JEDEC document JEP157 states that 250-V CDM allows safe manufacturing with a standard ESD control process.

## 7.3 Recommended Operating Conditions

over operating free-air temperature range (unless otherwise noted)

| | | MIN | NOM | MAX | UNIT |
|---|---|---|---|---|---|
| $V_{DD}$ | Supply voltage | 1.62 | | 5.5 | V |
| $V_S$ or $V_D$ | Signal path input/output voltage (source or drain pin) (Sx, D) | 0 | | $V_{DD}$ | V |
| $V_{SEL}$ or $V_{EN}$ | Logic control input pin voltage ($\overline{EN}$, A0, A1, A2) | 0 | | 5.5 | V |
| $I_S$ or $I_{D\ (CONT)}$ | Continuous current through switch (Sx, D pins) – 40°C to +85°C | – 50 | | 50 | mA |
| $I_S$ or $I_{D\ (CONT)}$ | Continuous current through switch (Sx, D pins) – 40°C to +125°C | – 25 | | 25 | mA |
| $I_{OK}$ | Current per input into source or drain pins when singal voltage exceeds recommended operating voltage [(1)] | – 50 | | 50 | mA |
| $I_{INJ}$ | Injected current into single off switch input | – 50 | | 50 | mA |
| $I_{INJ_ALL}$ | Total injected current into all off switch inputs combined | – 100 | | 100 | mA |
| $T_A$ | Ambient temperature | – 40 | | 125 | °C |

(1) If source or drain voltage exceeds VDD, or goes below GND, the pin will be shunted to GND through an internal FET, the current must be limited within the specified value. If $V_{signal} > V_{DD}$ or if $V_{signal} <$ GND.

Copyright © 2022 Texas Instruments Incorporated

## 7.4 Thermal Information: TMUX1308

| THERMAL METRIC[1] | | TMUX1308 | | | UNIT |
|---|---|---|---|---|---|
| | | PW (TSSOP) | DYY (SOT) | BQB (WQFN) | |
| | | PINS | PINS | PINS | |
| $R_{\theta JA}$ | Junction-to-ambient thermal resistance | 139.6 | 167.1 | 94.8 | °C/W |
| $R_{\theta JC(top)}$ | Junction-to-case (top) thermal resistance | 77.2 | 106.3 | 92.6 | °C/W |
| $R_{\theta JB}$ | Junction-to-board thermal resistance | 84.2 | 90.0 | 64.5 | °C/W |
| $\Psi_{JT}$ | Junction-to-top characterization parameter | 26.5 | 17.2 | 13.3 | °C/W |
| $\Psi_{JB}$ | Junction-to-board characterization parameter | 83.8 | 90.0 | 64.4 | °C/W |
| $R_{\theta JC(bot)}$ | Junction-to-case (bottom) thermal resistance | N/A | N/A | 42.7 | °C/W |

(1) For more information about traditional and new thermal metrics, see the Semiconductor and IC Package Thermal Metrics application report.

## 7.5 Thermal Information: TMUX1309

| THERMAL METRIC[1] | | TMUX1309 | | | UNIT |
|---|---|---|---|---|---|
| | | PW (TSSOP) | DYY (SOT) | BQB (WQFN) | |
| | | PINS | PINS | PINS | |
| $R_{\theta JA}$ | Junction-to-ambient thermal resistance thermal information for TMUX1309 | 139.6 | 172.4 | 94.8 | °C/W |
| $R_{\theta JC(top)}$ | Junction-to-case (top) thermal resistance | 77.2 | 107.0 | 92.6 | °C/W |
| $R_{\theta JB}$ | Junction-to-board thermal resistance | 84.2 | 96.1 | 64.5 | °C/W |
| $\Psi_{JT}$ | Junction-to-top characterization parameter | 26.5 | 19.7 | 13.3 | °C/W |
| $\Psi_{JB}$ | Junction-to-board characterization parameter | 83.8 | 95.9 | 64.4 | °C/W |
| $R_{\theta JC(bot)}$ | Junction-to-case (bottom) thermal resistance | N/A | N/A | 42.7 | °C/W |

(1) For more information about traditional and new thermal metrics, see the Semiconductor and IC Package Thermal Metrics application report.


Copyright © 2022 Texas Instruments Incorporated

## 7.6 Electrical Characteristics

At specified $V_{DD}$ ±10%
Typical values measured at nominal $V_{DD}$

| PARAMETER | | TEST CONDITIONS | $V_{DD}$ | Operating free-air temperature ($T_A$) | | | | | | | | | UNIT |
|---|---|---|---|---|---|---|---|---|---|---|---|---|---|
| | | | | 25°C | | | – 40°C to 85°C | | | – 40°C to 125°C | | | |
| | | | | MIN | TYP | MAX | MIN | TYP | MAX | MIN | TYP | MAX | |
| ANALOG SWITCH | | | | | | | | | | | | | |
| $R_{ON}$ | On-state switch resistance | $V_S$ = 0 V to $V_{DD}$<br>$I_{SD}$ = 0.5 mA | 1.8 V | | 650 | 1500 | | | 1700 | | | 1700 | Ω |
| | | | 2.5 V | | 230 | 600 | | | 670 | | | 670 | |
| | | | 3.3 V | | 120 | 330 | | | 350 | | | 370 | |
| | | | 5 V | | 75 | 195 | | | 220 | | | 270 | |
| $\Delta_{RON}$ | On-state switch resistance matching between inputs | $V_S$ = $V_{DD}$ / 2<br>$I_{SD}$ = 0.5 mA | 1.8 V | | 10 | 38 | | | 45 | | | 45 | Ω |
| | | | 2.5 V | | 3 | 20 | | | 22 | | | 22 | |
| | | | 3.3 V | | 2 | 8 | | | 11 | | | 15 | |
| | | | 5 V | | 1 | 7 | | | 10 | | | 14 | |
| $I_{S(OFF)}$ | Source off-state leakage current | Switch Off<br>$V_D$ = 0.8 x $V_{DD}$/ 0.2 x $V_{DD}$<br>$V_S$ = 0.2 x $V_{DD}$/ 0.8 x $V_{DD}$ | 1.8 V | | ±1 | | – 25 | | 25 | – 800 | | 800 | nA |
| | | | 2.5 V | | ±1 | | – 25 | | 25 | – 800 | | 800 | |
| | | | 3.3 V | | ±1 | | – 25 | | 25 | – 800 | | 800 | |
| | | | 5 V | | ±1 | | – 25 | | 25 | – 800 | | 800 | |
| $I_{D(OFF)}$ | Drain off-state leakage current (common drain pin) | Switch Off<br>$V_D$ = 0.8 x $V_{DD}$/ 0.2 x $V_{DD}$<br>$V_S$ = 0.2 x $V_{DD}$/ 0.8 x $V_{DD}$ | 1.8 V | | ±1 | | – 45 | | 45 | – 800 | | 800 | nA |
| | | | 2.5 V | | ±1 | | – 45 | | 45 | – 800 | | 800 | |
| | | | 3.3 V | | ±1 | | – 45 | | 45 | – 800 | | 800 | |
| | | | 5 V | | ±1 | | – 45 | | 45 | – 800 | | 800 | |
| $I_{D(ON)}$<br>$I_{S(ON)}$ | Channel on-state leakage current | Switch On<br>$V_D$ = $V_S$ = 0.8 x $V_{DD}$ or<br>$V_D$ = $V_S$ = 0.2 x $V_{DD}$ | 1.8 V | | ±1 | | – 45 | | 45 | – 800 | | 800 | nA |
| | | | 2.5 V | | ±1 | | – 45 | | 45 | – 800 | | 800 | |
| | | | 3.3 V | | ±1 | | – 45 | | 45 | – 800 | | 800 | |
| | | | 5 V | | ±1 | | – 45 | | 45 | – 800 | | 800 | |
| $C_{SOFF}$ | Source off capacitance | $V_S$ = $V_{DD}$ / 2<br>f = 1 MHz | 1.8 V | | 2 | 14 | | | 14 | | | 14 | pF |
| | | | 2.5 V | | 2 | 14 | | | 14 | | | 14 | |
| | | | 3.3 V | | 2 | 14 | | | 14 | | | 14 | |
| | | | 5 V | | 2 | 14 | | | 14 | | | 14 | |
| $C_{DOFF}$ | Drain off capacitance | $V_S$ = $V_{DD}$ / 2<br>f = 1 MHz | 1.8 V | | 7 | 37 | | | 37 | | | 37 | pF |
| | | | 2.5 V | | 7 | 37 | | | 37 | | | 37 | |
| | | | 3.3 V | | 7 | 37 | | | 37 | | | 37 | |
| | | | 5 V | | 7 | 37 | | | 37 | | | 37 | |
| $C_{SON}$<br>$C_{DON}$ | On capacitance | $V_S$ = $V_{DD}$ / 2<br>f = 1 MHz | 1.8 V | | 11 | 40 | | | 40 | | | 40 | pF |
| | | | 2.5 V | | 11 | 40 | | | 40 | | | 40 | |
| | | | 3.3 V | | 11 | 40 | | | 40 | | | 40 | |
| | | | 5 V | | 11 | 40 | | | 40 | | | 40 | |
| POWER SUPPLY | | | | | | | | | | | | | |
| $I_{DD}$ | $V_{DD}$ supply current | Logic inputs = 0 V or $V_{DD}$ | 1.8 V | | | 1 | | | 1 | | | 1.2 | μA |
| | | | 2.5 V | | | 1 | | | 1 | | | 1.5 | |
| | | | 3.3 V | | | 1 | | | 1 | | | 2 | |
| | | | 5 V | | | 1 | | | 1.5 | | | 3 | |

Copyright © 2022 Texas Instruments Incorporated

## 7.7 Logic and Dynamic Characteristics

At specified $V_{DD}$ ±10%
Typical values measured at nominal $V_{DD}$ and $T_A$ = 25°C.

| PARAMETER | | TEST CONDITIONS | $V_{DD}$ | Operating free-air temperature ($T_A$) – 40°C to 125°C MIN | TYP | MAX | UNIT |
|---|---|---|---|---|---|---|---|
| LOGIC INPUTS ($\overline{EN}$, A0, A1, A2) | | | | | | | |
| $V_{IH}$ | Input logic high | | 1.8 V | 0.95 | | 5.5 | V |
| | | | 2.5 V | 1.1 | | 5.5 | |
| | | | 3.3 V | 1.15 | | 5.5 | |
| | | | 5 V | 1.25 | | 5.5 | |
| $V_{IL}$ | Input logic low | | 1.8 V | 0 | | 0.6 | V |
| | | | 2.5 V | 0 | | 0.7 | |
| | | | 3.3 V | 0 | | 0.8 | |
| | | | 5 V | 0 | | 0.95 | |
| $I_{IH}$ | Logic high input leakage current | $V_{LOGIC}$ = 1.8 V or $V_{DD}$ | All | | | 1 | uA |
| $I_{IL}$ | Logic low input leakage current | $V_{LOGIC}$ = 0 V | All | –1 | | | uA |
| $C_{IN}$ | Logic input capacitance | $V_{LOGIC}$ = 0 V, 1.8 V, $V_{DD}$<br>f = 1 MHz | All | | 1 | 2 | pF |
| DYNAMIC CHARACTERISTICS | | | | | | | |
| $Q_{INJ}$ | Charge Injection | $V_S = V_{DD} / 2$<br>$R_S$ = 0 Ω, $C_L$ = 100 pF | 1.8 V | | –0.5 | | pC |
| | | | 2.5 V | | –0.5 | | |
| | | | 3.3 V | | –1 | | |
| | | | 5 V | | –6.5 | | |
| $O_{ISO}$ | Off Isolation | $V_{BIAS} = V_{DD} / 2$<br>$V_S$ = 200 mVpp<br>$R_L$ = 50 Ω, $C_L$ = 5 pF<br>f = 100 kHz | 1.8 V | | –110 | | dB |
| | | | 2.5 V | | –110 | | |
| | | | 3.3 V | | –110 | | |
| | | | 5 V | | –110 | | |
| $O_{ISO}$ | Off Isolation | $V_{BIAS} = V_{DD} / 2$<br>$V_S$ = 200 mVpp<br>$R_L$ = 50 Ω, $C_L$ = 5 pF<br>f = 1 MHz | 1.8 V | | –90 | | dB |
| | | | 2.5 V | | –90 | | |
| | | | 3.3 V | | –90 | | |
| | | | 5 V | | –90 | | |
| $X_{TALK}$ | Crosstalk | $V_{BIAS} = V_{DD} / 2$<br>$V_S$ = 200 mVpp<br>$R_L$ = 50 Ω, $C_L$ = 5 pF<br>f = 100 kHz | 1.8 V | | –110 | | dB |
| | | | 2.5 V | | –110 | | |
| | | | 3.3 V | | –110 | | |
| | | | 5 V | | –110 | | |
| $X_{TALK}$ | Crosstalk | $V_{BIAS} = V_{DD} / 2$<br>$V_S$ = 200 mVpp<br>$R_L$ = 50 Ω, $C_L$ = 5 pF<br>f = 1 MHz | 1.8 V | | –90 | | dB |
| | | | 2.5 V | | –90 | | |
| | | | 3.3 V | | –90 | | |
| | | | 5 V | | –90 | | |
| BW | Bandwidth | $V_{BIAS} = V_{DD} / 2$<br>$V_S$ = 200 mVpp<br>RL = 50 Ω, CL = 5 pF | 1.8 V | | 350 | | MHz |
| | | | 2.5 V | | 450 | | |
| | | | 3.3 V | | 500 | | |
| | | | 5 V | | 500 | | |


Copyright © 2022 Texas Instruments Incorporated

## 7.8 Timing Characteristics

At specified $V_{DD}$ ±10%
Typical values measured at nominal $V_{DD}$.

| PARAMETER | | TEST CONDITIONS | $V_{DD}$ | Operating free-air temperature ($T_A$) | | | | | | | | | UNIT |
|---|---|---|---|---|---|---|---|---|---|---|---|---|---|
| | | | | 25°C | | | – 40°C to 85°C | | | – 40°C to 125°C | | | |
| | | | | MIN | TYP | MAX | MIN | TYP | MAX | MIN | TYP | MAX | |
| SWITCHING CHARACTERISTICS | | | | | | | | | | | | | |
| $t_{PD}$ | Propagation delay | $C_L$ = 50 pF Sx to D, D to Sx | 1.8 V | | 15 | 30 | | | 30 | | | 30 | ns |
| | | | 2.5 V | | 8 | 15 | | | 20 | | | 20 | |
| | | | 3.3 V | | 5 | 11 | | | 15 | | | 15 | |
| | | | 5 V | | 4 | 9 | | | 10 | | | 10 | |
| | | CL = 15 pF | 5 V | | 1.5 | 4 | | | 5 | | | 5 | |
| $t_{TRAN}$ | Transition-time between inputs | $R_L$ = 10 kΩ, $C_L$ = 50 pF Ax to D, Ax to Sx | 1.8 V | | 44 | 94 | | | 103 | | | 103 | ns |
| | | | 2.5 V | | 30 | 63 | | | 67 | | | 67 | |
| | | | 3.3 V | | 23 | 51 | | | 54 | | | 54 | |
| | | | 5 V | | 18 | 43 | | | 46 | | | 46 | |
| | | $R_L$ = 10 kΩ, $C_L$ = 15 pF | 5 V | | 15 | 39 | | | 43 | | | 43 | |
| $t_{ON(EN)}$ | Turnon-time from enable | $R_L$ = 10 kΩ, $C_L$ = 50 pF EN to D, EN to Sx | 1.8 V | | 39 | 64 | | | 75 | | | 75 | ns |
| | | | 2.5 V | | 30 | 45 | | | 50 | | | 50 | |
| | | | 3.3 V | | 26 | 38 | | | 42 | | | 42 | |
| | | | 5 V | | 24 | 32 | | | 37 | | | 37 | |
| | | $R_L$ = 10 kΩ, $C_L$ = 15 pF | 5 V | | 22 | 31 | | | 35 | | | 35 | |
| $t_{OFF(EN)}$ | Turnoff time from enable | $R_L$ = 10 kΩ, $C_L$ = 50 pF EN to D, EN to Sx | 1.8 V | | 58 | 80 | | | 85 | | | 85 | ns |
| | | | 2.5 V | | 21 | 70 | | | 72 | | | 72 | |
| | | | 3.3 V | | 15 | 65 | | | 70 | | | 70 | |
| | | | 5 V | | 11 | 40 | | | 45 | | | 45 | |
| | | $R_L$ = 10 kΩ, $C_L$ = 15 pF | 5 V | | 8 | 15 | | | 20 | | | 20 | |
| $t_{BBM}$ | Break before make time | $R_L$ = 10 kΩ, $C_L$ = 15 pF Sx to D, D to Sx | 1.8 V | 1 | 16 | | 1 | | | 1 | | | ns |
| | | | 2.5 V | 1 | 22 | | 1 | | | 1 | | | |
| | | | 3.3 V | 1 | 24 | | 1 | | | 1 | | | |
| | | | 5 V | 1 | 33 | | 1 | | | 1 | | | |

## 7.9 Injection Current Coupling

At specified $V_{DD}$ ±10%
Typical values measured at nominal $V_{DD}$ and $T_A$ = 25°C.

| PARAMETER | | $V_{DD}$ | TEST CONDITIONS | | -40°C to 125°C | | | UNIT |
|---|---|---|---|---|---|---|---|---|
| | | | | | MIN | TYP | MAX | |
| **INJECTION CURRENT COUPLING** | | | | | | | | |
| $\Delta V_{OUT}$ | Maximum shift of output voltage of enabled analog input | 1.8 V | $R_S \leqslant 3.9$ kΩ | $I_{INJ} \leqslant 1$ mA | | 0.01 | 1 | mV |
| | | 3.3 V | | | | 0.05 | 1 | |
| | | 5 V | | | | 0.1 | 1 | |
| | | 1.8 V | $R_S \leqslant 3.9$ kΩ | $I_{INJ} \leqslant 10$ mA | | 0.01 | 2 | |
| | | 3.3 V | | | | 0.3 | 3 | |
| | | 5 V | | | | 0.06 | 4 | |
| | | 1.8 V | $R_S \leqslant 20$ kΩ | $I_{INJ} \leqslant 1$ mA | | 0.05 | 2 | |
| | | 3.3 V | | | | 0.05 | 2 | |
| | | 5 V | | | | 0.1 | 2 | |
| | | 1.8 V | $R_S \leqslant 20$ kΩ | $I_{INJ} \leqslant 10$ mA | | 0.05 | 15 | |
| | | 3.3 V | | | | 0.05 | 15 | |
| | | 5 V | | | | 0.02 | 15 | |


Copyright © 2022 Texas Instruments Incorporated

## 7.10 Typical Characteristics

at $T_A$ = 25°C, $V_{DD}$ = 5 V (unless otherwise noted)

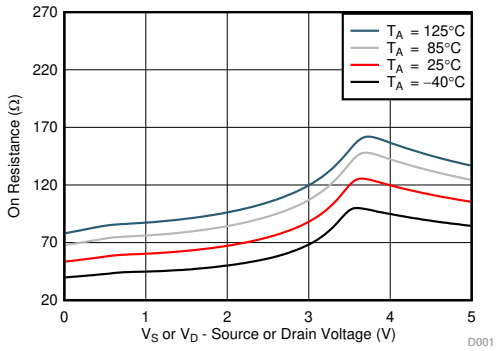


$V_{DD}$ = 5 V

**图 7-1. On-Resistance vs Temperature**

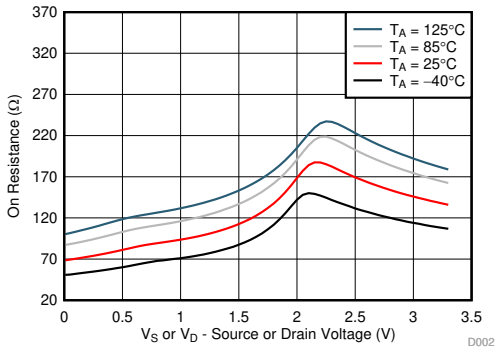


$V_{DD}$ = 3.3 V

**图 7-2. On-Resistance vs Temperature**

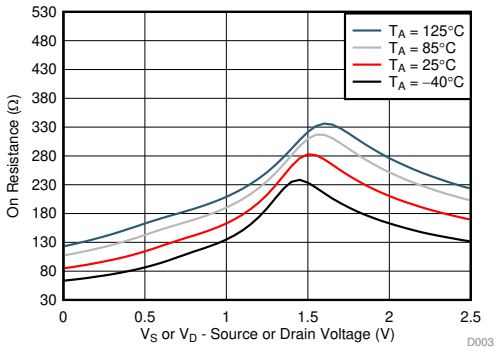


$V_{DD}$ = 2.5 V

**图 7-3. On-Resistance vs Temperature**

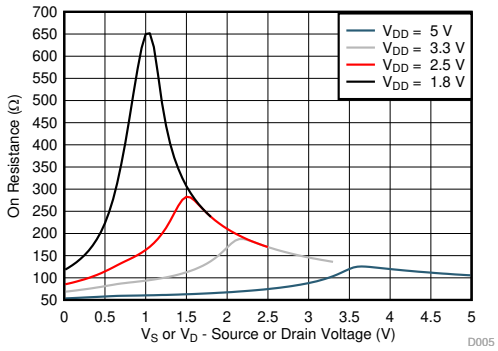


$T_A$ = 25°C

**图 7-4. On-Resistance vs Source or Drain Voltage**

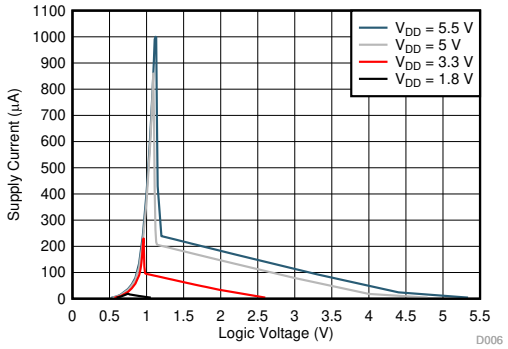


**图 7-5. Supply Current vs Logic Voltage**

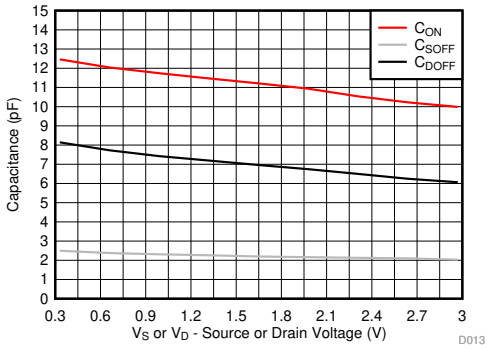


$V_{DD}$ = 3.3 V

**图 7-6. Capacitance vs Source Voltage**

## 7.10 Typical Characteristics (continued)

at $T_A$ = 25°C, $V_{DD}$ = 5 V (unless otherwise noted)

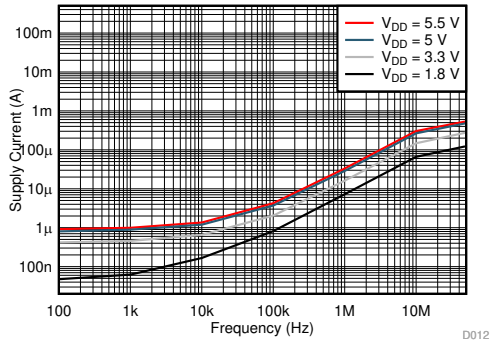


$T_A$ = 25°C

**图 7-7. Supply Current vs Input Switching Frequency**

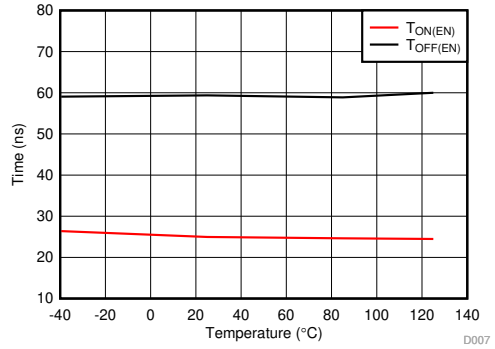


$V_{DD}$ = 3.3 V

**图 7-8. $T_{ON(EN)}$ and $T_{OFF(EN)}$ vs Temperature**

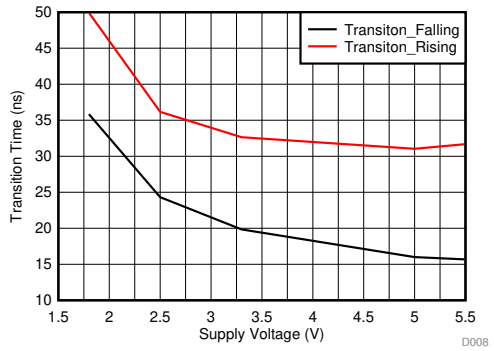


$T_A$ = 25°C

**图 7-9. $T_{TRANSITION}$ vs Supply Voltage**

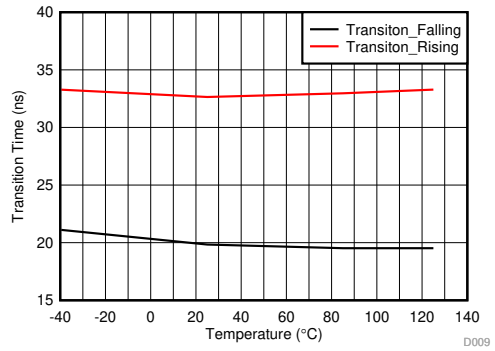


$T_A$ = 25°C

**图 7-10. $T_{TRANSITION}$ vs Temperature**

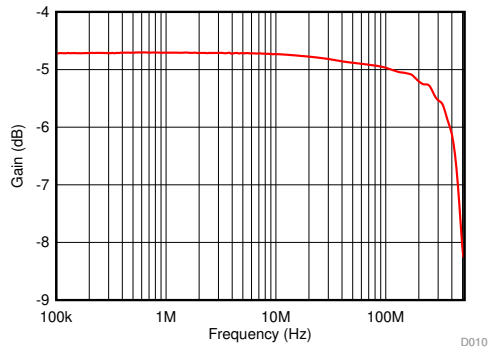


$T_A$ = 25°C

**图 7-11. On Response vs Frequency**

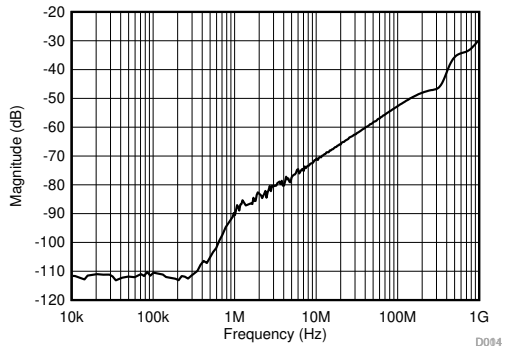


$T_A$ = 25°C , $V_{DD}$ = 3.3 V

**图 7-12. Xtalk and Off-Isolation vs Frequency**


Copyright © 2022 Texas Instruments Incorporated

## 7.10 Typical Characteristics (continued)

at $T_A$ = 25°C, $V_{DD}$ = 5 V (unless otherwise noted)

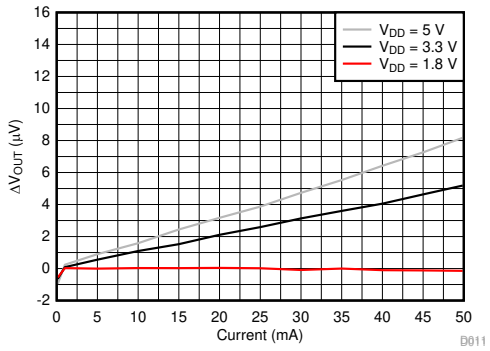


$V_S$ = ($V_{DD}$/2), $T_A$ = 25°C

**图 7-13. Injection Current vs Maximum Output Voltage Shift**

# 8 Parameter Measurement Information

## 8.1 On-Resistance

The on-resistance of a device is the ohmic resistance between the source (Sx) and drain (D) pins of the device. The on-resistance varies with input voltage and supply voltage. The symbol $R_{ON}$ is used to denote on-resistance. The measurement setup used to measure $R_{ON}$ is shown below. Voltage (V) and current ($I_{SD}$) are measured using this setup, and $R_{ON}$ is computed as shown in 图 8-1 with $R_{ON} = V / I_{SD}$:

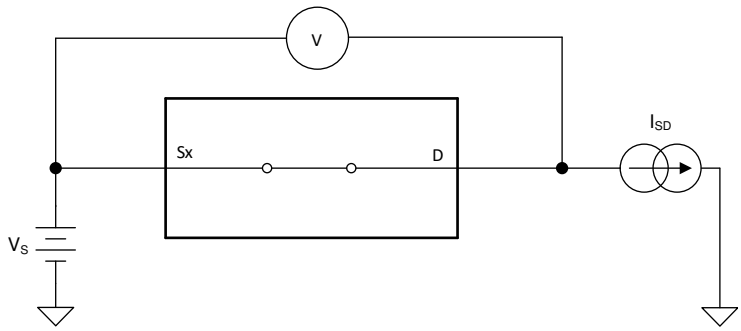


**图 8-1. On-Resistance Measurement Setup**

## 8.2 Off-Leakage Current

There are two types of leakage currents associated with a switch during the off state:

1. Source off-leakage current.
2. Drain off-leakage current.

Source leakage current is defined as the leakage current flowing into or out of the source pin when the switch is off. This current is denoted by the symbol $I_{S(OFF)}$.

Drain leakage current is defined as the leakage current flowing into or out of the drain pin when the switch is off. This current is denoted by the symbol $I_{D(OFF)}$.

图 8-2 shows the setup used to measure both off-leakage currents.

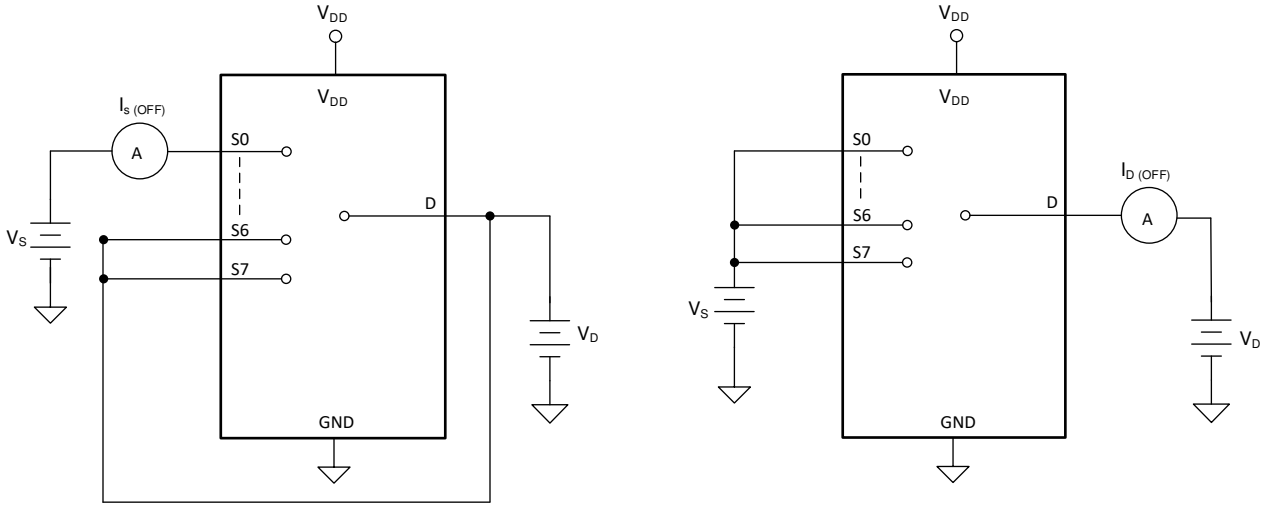


**图 8-2. Off-Leakage Measurement Setup**


Copyright © 2022 Texas Instruments Incorporated

## 8.3 On-Leakage Current

Source on-leakage current is defined as the leakage current flowing into or out of the source pin when the switch is on. This current is denoted by the symbol $I_{S(ON)}$.

Drain on-leakage current is defined as the leakage current flowing into or out of the drain pin when the switch is on. This current is denoted by the symbol $I_{D(ON)}$.

Either the source pin or drain pin is left floating during the measurement. 图 8-3 shows the circuit used for measuring the on-leakage current, denoted by $I_{S(ON)}$ or $I_{D(ON)}$.

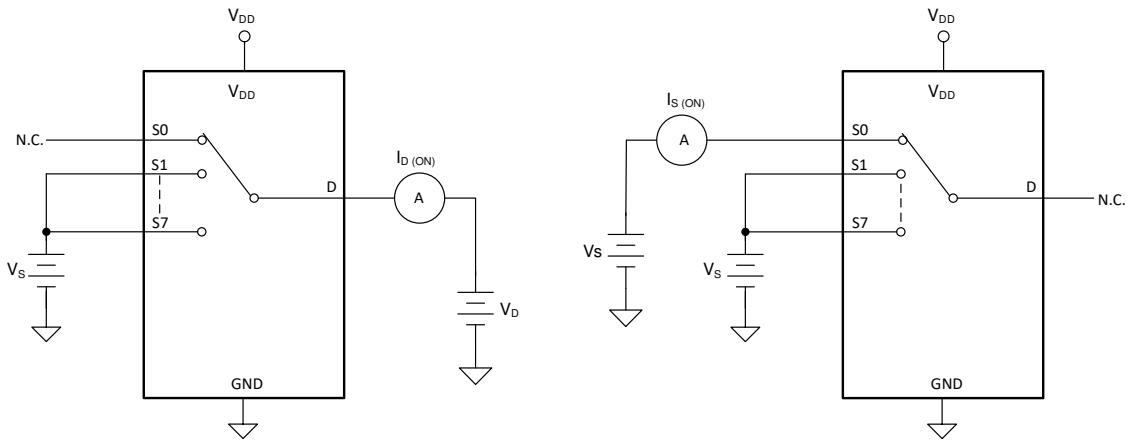


**图 8-3. On-Leakage Measurement Setup**

## 8.4 Transition Time

Transition time is defined as the time taken by the output of the device to rise or fall 50% after the address signal has risen or fallen past the 50% threshold. 图 8-4 shows the setup used to measure transition time, denoted by the symbol $t_{TRANSITION}$.

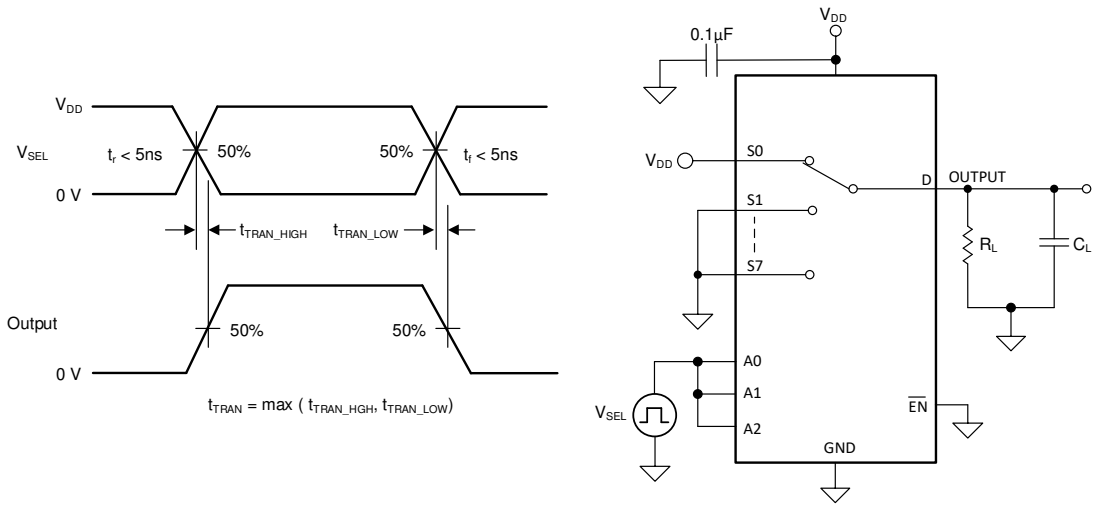


**图 8-4. Transition-Time Measurement Setup**

## 8.5 Break-Before-Make

Break-before-make delay is a safety feature that prevents two inputs from connecting when the device is switching. The output first breaks from the on-state switch before making the connection with the next on-state switch. The time delay between the *break* and the *make* is known as break-before-make delay. 图 8-5 shows the setup used to measure break-before-make delay, denoted by the symbol $t_{OPEN(BBM)}$.

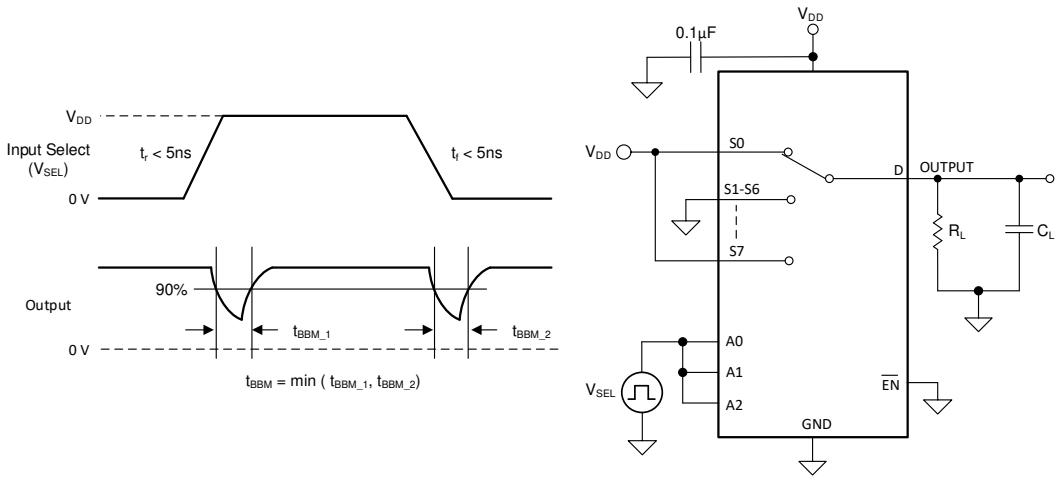


**图 8-5. Break-Before-Make Delay Measurement Setup**

## 8.6 $t_{ON(EN)}$ and $t_{OFF(EN)}$

Turn-on time is defined as the time taken by the output of the device to rise to 10% after the enable has risen past the 50% threshold. The 10% measurement is utilized to provide the timing of the device, system level timing can then account for the time constant added from the load resistance and load capacitance. 图 8-6 shows the setup used to measure transition time, denoted by the symbol $t_{ON(EN)}$.

Turn-off time is defined as the time taken by the output of the device to fall to 90% after the enable has fallen past the 50% threshold. The 90% measurement is utilized to provide the timing of the device, system level timing can then account for the time constant added from the load resistance and load capacitance. 图 8-6 shows the setup used to measure transition time, denoted by the symbol $t_{OFF(EN)}$.

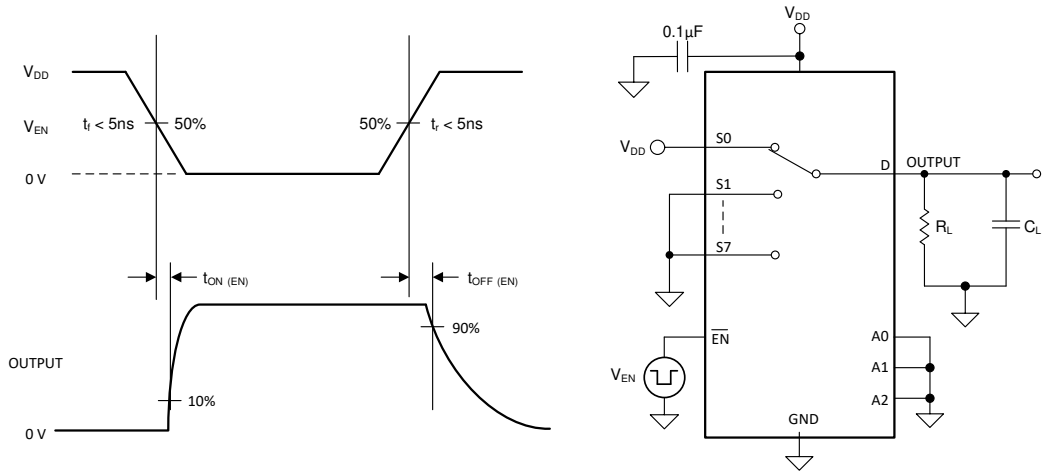


**图 8-6. Turn-On and Turn-Off Time Measurement Setup**


Copyright © 2022 Texas Instruments Incorporated

## 8.7 Charge Injection

The TMUX1308 and TMUX1309 device have a transmission-gate topology. Any mismatch in capacitance between the NMOS and PMOS transistors results in a charge injected into the drain or source during the falling or rising edge of the gate signal. The amount of charge injected into the source or drain of the device is known as charge injection, and is denoted by the symbol $Q_C$. 图 8-7 shows the setup used to measure charge injection from source (Sx) to drain (D).

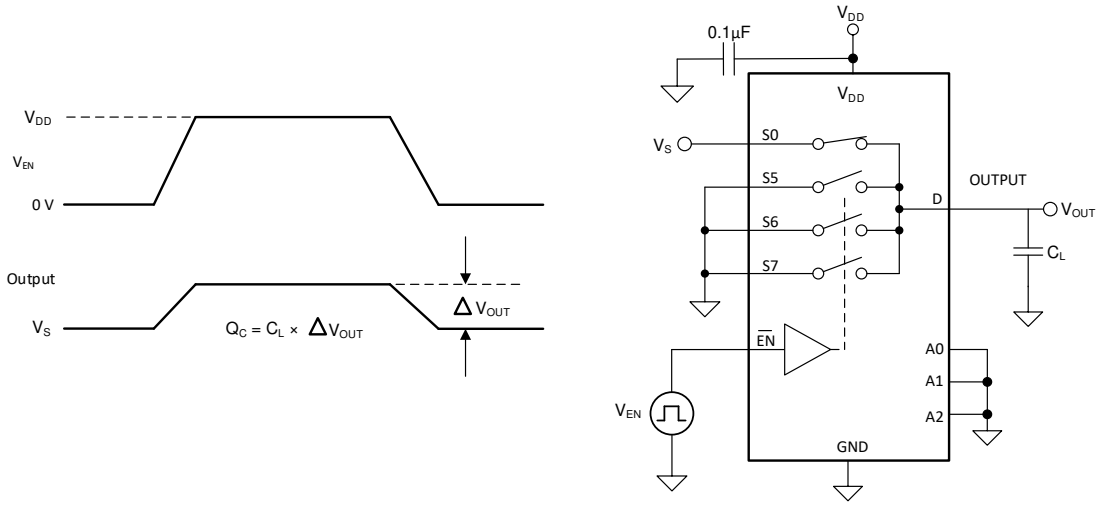


**图 8-7. Charge-Injection Measurement Setup**

## 8.8 Off Isolation

Off isolation is defined as the ratio of the signal at the drain pin (D) of the device when a signal is applied to the source pin (Sx) of an off-channel. 图 8-8 shows the setup used to measure, and the equation to compute off isolation.

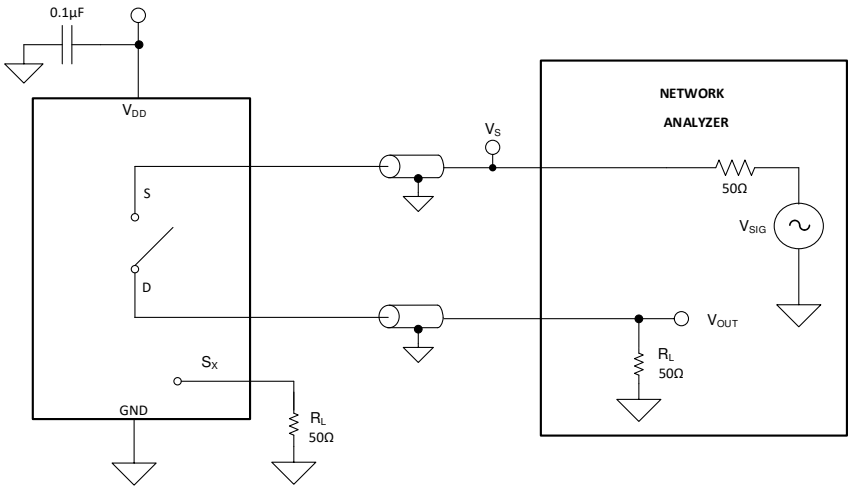


**图 8-8. Off Isolation Measurement Setup**

$$\text{Off Isolation} = 20 \cdot \text{Log}\left(\frac{V_{OUT}}{V_S}\right) \tag{1}$$

## 8.9 Crosstalk

Crosstalk is defined as the ratio of the signal at the drain pin (D) of a different channel, when a signal is applied at the source pin (Sx) of an on-channel. 图 8-9 shows the setup used to measure, and the equation used to compute crosstalk.

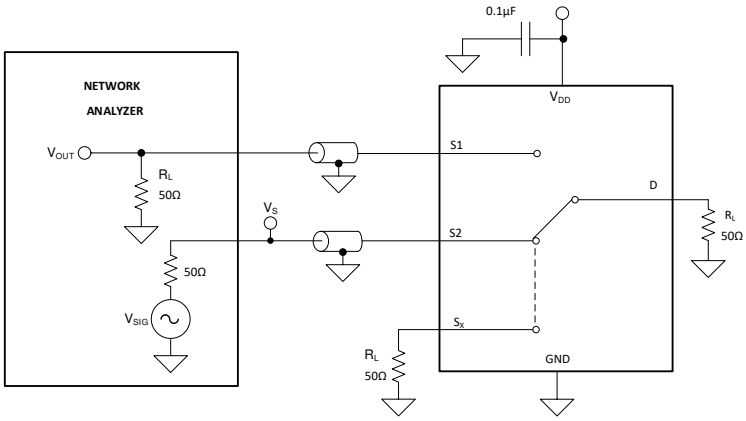


**图 8-9. Channel-to-Channel Crosstalk Measurement Setup**

$$\text{Channel-to-Channel Crosstalk} = 20 \cdot \text{Log}\left(\frac{V_{OUT}}{V_S}\right) \tag{2}$$

## 8.10 Bandwidth

Bandwidth is defined as the range of frequencies that are attenuated by less than 3 dB when the input is applied to the source pin (Sx) of an on-channel, and the output is measured at the drain pin (D) of the device. 图 8-10 shows the setup used to measure bandwidth.

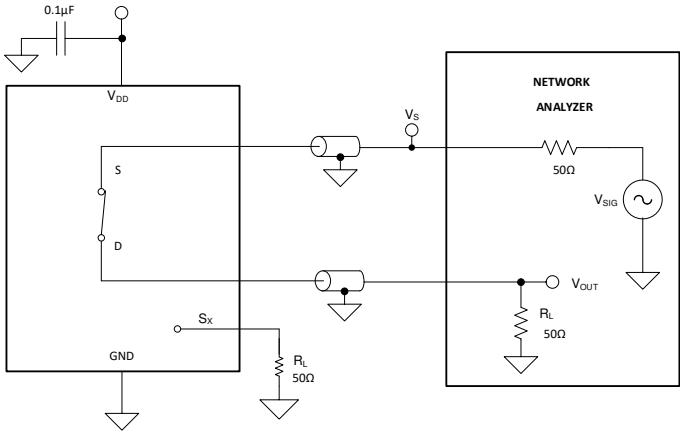


**图 8-10. Bandwidth Measurement Setup**

$$\text{Attenuation} = 20 \cdot \text{Log}\left(\frac{V_2}{V_1}\right) \tag{3}$$


Copyright © 2022 Texas Instruments Incorporated

## 8.11 Injection Current Control

Injection current is measured at the change in output of the enabled signal path when a current is injected into a disabled signal path. 图 8-11 shows the setup used to measure injection current control.

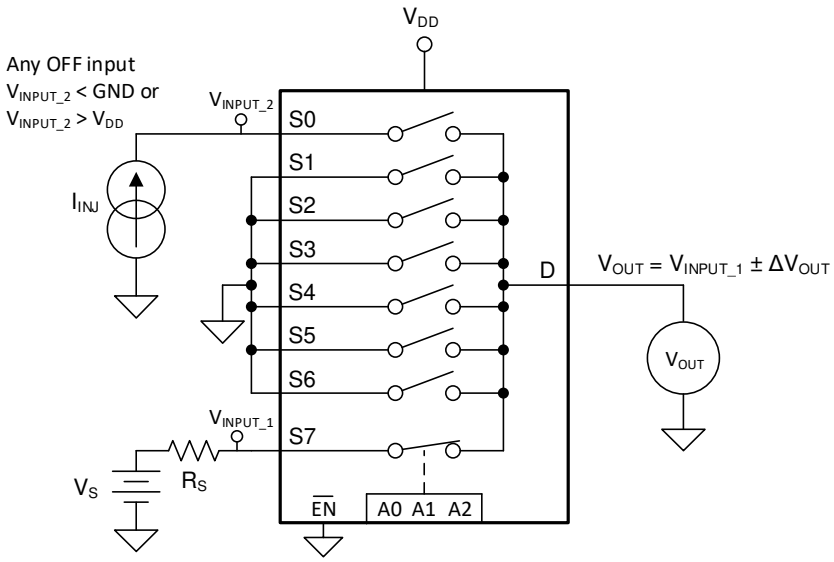


**图 8-11. Injection Current Measurement Setup**

# 9 Detailed Description

## 9.1 Overview

The TMUX1308 is an 8:1, single-ended (1-channel), mux. The TMUX1309 is a 4:1, differential (2-channel) mux. Each channel is turned on or turned off based on the state of the address lines and enable pin.

## 9.2 Functional Block Diagram

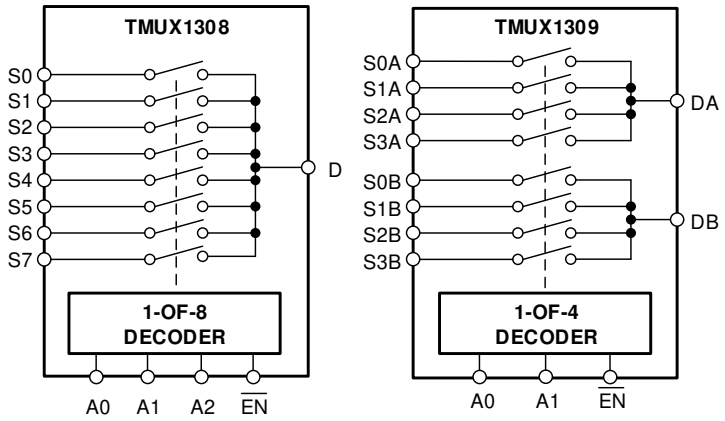


## 9.3 Feature Description

### 9.3.1 Bidirectional Operation

The TMUX1308 and TMUX1309 devices conduct equally well from source (Sx) to drain (Dx) or from drain (Dx) to source (Sx). Each signal path has very similar characteristics in both directions so they can be used as both multiplexers and demultiplexer to support both analog and digital signals.

### 9.3.2 Rail-to-Rail Operation

The valid signal path input and output voltage for the TMUX1308 and TMUX1309 ranges from GND to $V_{DD}$.

### 9.3.3 1.8 V Logic Compatible Inputs

The TMUX1308 and TMUX1309 support 1.8-V logic compatible control for all logic control inputs. The logic input thresholds scale with supply but still provide 1.8-V logic control when operating at 5.5-V supply voltage. 1.8-V logic level inputs allows the multiplexers to interface with processors that have lower logic I/O rails and eliminates the need for an external voltage translator, which saves both space and BOM cost. The current consumption of the TMUX1308 and TMUX1309 devices increase when using 1.8-V logic with higher supply voltage. For more information on 1.8-V logic implementations, refer to *Simplifying Design with 1.8 V logic Muxes and Switches*.

### 9.3.4 Fail-Safe Logic

The TMUX1308 and TMUX1309 device have Fail-Safe Logic on the control input pins (EN, A0, A1, and A2) allowing for operation up to 5.5-V, regardless of the state of the supply pin. This feature allows voltages on the control pins to be applied before the supply pin, protecting the device from potential damage. Fail-Safe Logic minimizes system complexity by removing the need for power supply sequencing on the logic control pins. For example, the Fail-Safe Logic feature allows the select pins of the TMUX1308 and TMUX1309 to be ramped to 5.5-V while $V_{DD}$ = 0-V. Additionally, the feature enables operation of the multiplexers with $V_{DD}$ = 1.8-V while allowing the select pins to interface with a logic level of another device up to 5.5-V, eliminating the potential need for an external voltage translator.


Copyright © 2022 Texas Instruments Incorporated

### 9.3.5 Injection Current Control

Injection current is the current that is being forced into a pin by an input voltage ($V_{IN}$) higher than the positive supply ($V_{DD}$ + ΔV) or lower than ground ($V_{SS}$). The current flows through the input protection diodes into whichever supply of the device is potentially compromising the accuracy and reliability of the system. Injected currents can come from various sources depending on the application.

- Harsh environments and applications with long cabling, such as in factory automation and automotive systems, may be susceptible to injected currents from switching or transient events.
- Other self-contained systems can also be subject to injected current if the input signal is coming from various sensors or current sources.

**Injected Current Impact**: typical CMOS switches have ESD protection diodes on the inputs and outputs. These diodes not only serve as ESD protection but also provide a voltage clamp to prevent the inputs or outputs going above $V_{DD}$ or below GND and $V_{SS}$. When current is injected into the pin of a disabled signal path, a small amount of current goes through the ESD diode but most of the current goes through conduction to the drain. If forward diode voltage of the ESD diode (VF) is greater than the PMOS threshold voltage (VT), then the PMOS of all OFF switches turns ON and there would be undesirable subthreshold leakage between the source and the drain that can lift the OFF source pins up also. 图 9-1 shows a simplified diagram of a typical CMOS switch and associated injected current path.

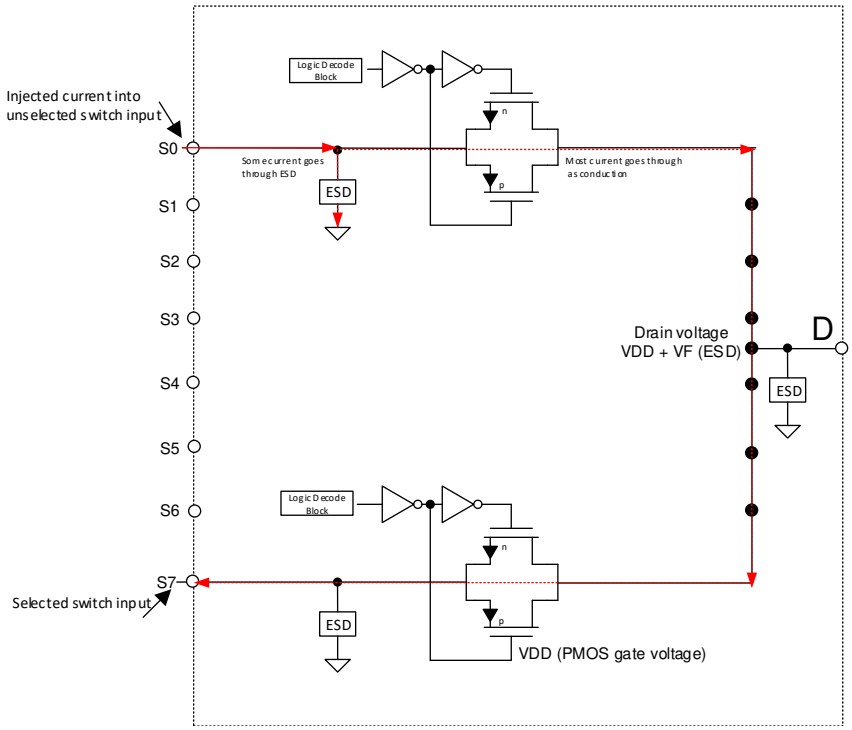


**图 9-1. Simplified Diagram of Typical CMOS Switch and Associated Injected Current Path**

It is quite difficult to cut off these current paths. The drain pin can never be allowed to exceed the voltage above $V_{DD}$ by more than a VT. Analog pins can be protected against current injection by adding external components like a Schottky diode from the drain pin to ground to clamp the drain voltage at < $V_{DD}$ + VT and cut off the current path.

**Change in $R_{ON}$ due to Current Injection**: because the ON resistance of the enabled FET switch is impacted by the change in the supply rail, when the drain pin voltage exceeds the supply voltage by more than a VT, an error in the output signal voltage can be expected. This undesired change in the output can cause issues related to false trigger events and incorrect measurement readings, potentially compromising the accuracy and reliability of the system. As shown in 图 9-2, S2 is the enabled signal path that is conducting a signal from S2 pin to D pin. Because there is an injected current at the disabled S1 pin, the voltage at that pin increases above the supply voltage and the ESD protection diode is forward biased, shifting the power supply rail. This shift in supply voltage alters the $R_{ON}$ of the internal FET switches, causing a ΔV error on the output at the D pin.

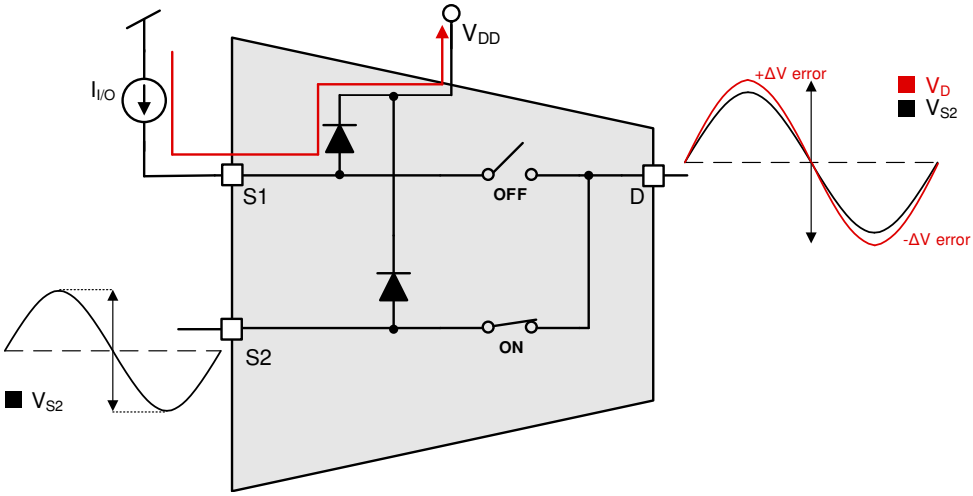


**图 9-2. Injected Current Impact on $R_{ON}$**

To avoid the complications of added external protection to your system, the TMUX1308 and TMUX1309 devices have an internal injection current control feature which eliminates the need for external diode and resistor networks typically used to protect the switch and keep the input signals within the supply voltage. The internal injection current control circuitry allows the signals on the disabled signal paths to exceed the supply voltage without affecting the signal of the enabled signal path. The injection current control circuitry also protects the TMUX13xx from currents injected into disabled signal paths without impacting the enabled signal path, which typical CMOS switches do not support. Additionally, the TMUX1308 and TMUX1309 do not have any internal diode paths to the supply pin, which eliminates the risk of damaging components connected to the supply pin or providing unintended power to the system supply rail. For a simplified diagram that shows one signal path for the TMUX13xx devices and the associated injection current circuit, refer to 节 9.2.

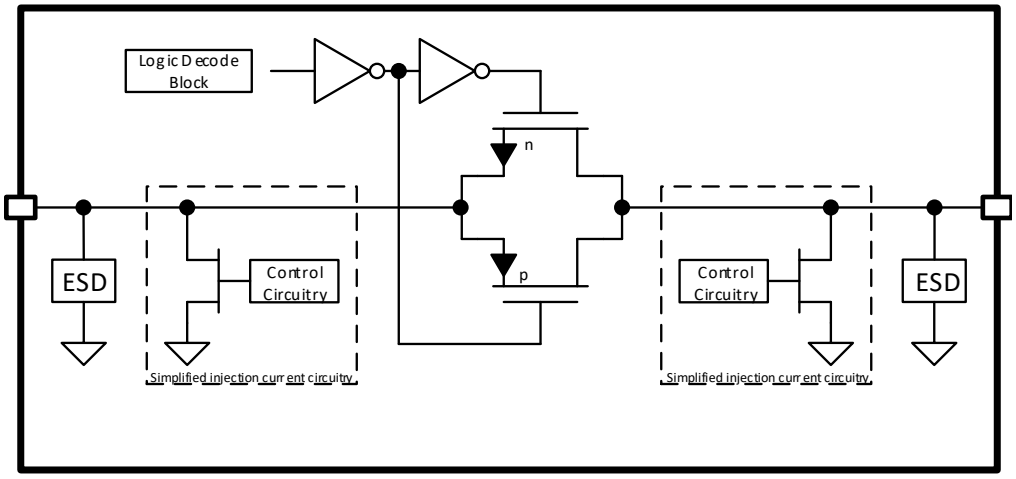


**图 9-3. Simplified Diagram of Injection Current Control**


Copyright © 2022 Texas Instruments Incorporated

The injection current control circuitry is independently controlled for each source or drain pin (Sx or D). The control circuitry for a particular pin is enabled when that input is disabled by the logic pins and the injected current causes the voltage at the pin to be above $V_{DD}$ or below GND. The injection current circuit includes an FET to shunt the undesired current to GND in the case of overvoltage or injected current events. Each injection current circuit is rated to handle up to 50 mA; the device, however, can support a maximum current of 100 mA at any given time. Depending on the system application, a series limiting resistor may be needed and must be sized appropriately. 图 9-3 shows the TMUX13xx protection circuitry with an injected current at an input pin.

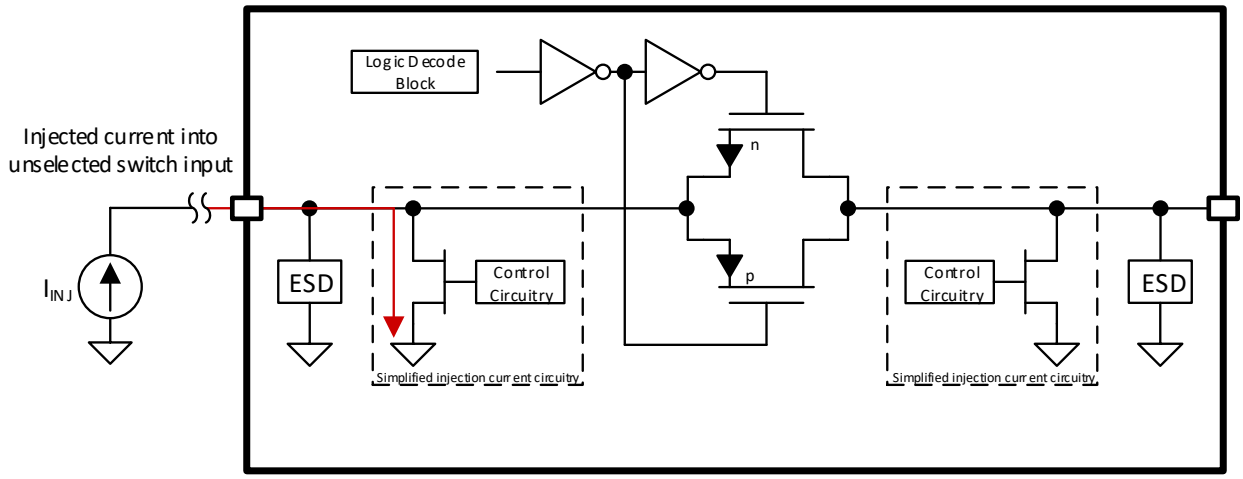


**图 9-4. Injected Current at Input Pin**

图 9-5 shows an example of using a series limiting resistor in the case of an overvoltage event.

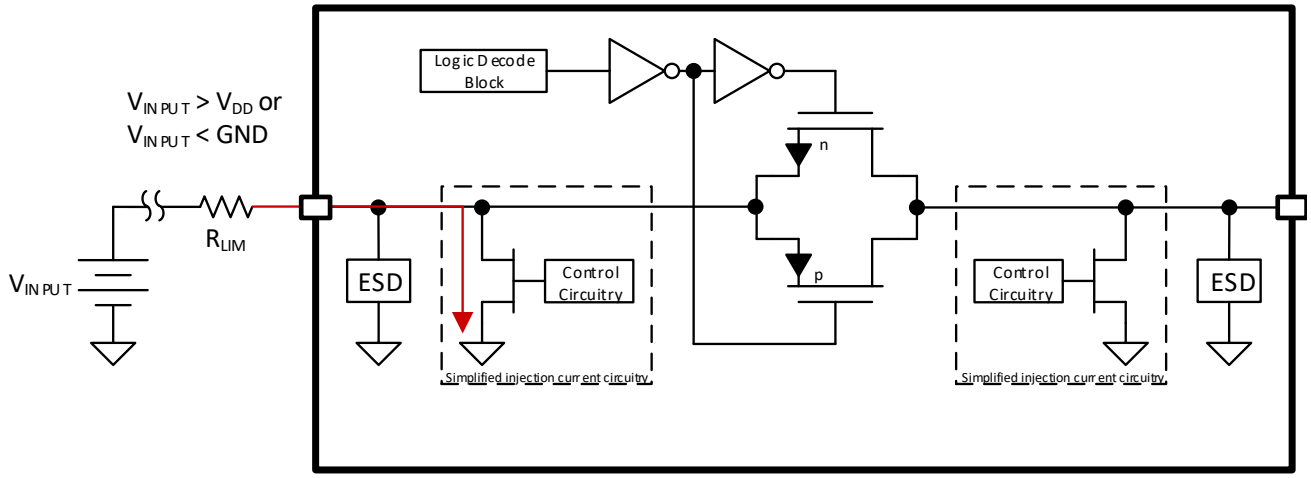


**图 9-5. Over-Voltage Event with Series Resistor**

For the injection current control circuitry to be active, two conditions must be present. First, the voltage at the source or drain pins is greater than $V_{DD}$, or less than GND. Next, the channel must be unselected. With those two requirements met, the protection FET will be turned on for any disabled signal path and shunt the pin to GND. In this event, a series resistor is needed to limit the total current injected into the device to be less than 100 mA. Three example scenarios are outlined in the following sections.

#### 9.3.5.1 TMUX13xx is Powered, Channel is Unselected, and the Input Signal is Greater Than $V_{DD}$ ($V_{DD}$ = 5 V, $V_{INPUT}$ = 5.5 V)

A typical CMOS switch would have an internal ESD diode to the supply pin rated for ≅30 mA that would be turned on and a series limited resistor would be needed. However, any conducted current would be injected into the supply rail potentially damaging the system, unexpectedly turning on other devices on the same supply rail, or requiring additional components for protection. The TMUX13xx implementation also handles this scenario with a series limiting resistor; the current path, however, is now to GND which does not have the same issues as the current injected into the supply rail.

#### 9.3.5.2 TMUX13xx is Powered, Channel is Selected, and the Input Signal is Greater Than $V_{DD}$ ($V_{DD}$ = 5 V, $V_{INPUT}$ = 5.5 V)

The injection current control circuitry is fully active when the channel is unselected and an overvoltage event is present (overvoltage being defined as 0.5 V above the supply rail). However, in situations where the channel is selected and an overvoltage event occurs, this protection circuitry will still be partially active. In this instance, a portion of the injected current will be redirected through the protection circuitry to GND, but will not be a full shunt. So, some current will also flow through the source to drain path. This allows the device to tolerate overvoltage conditions in the event of the channel being selected, but precautions are still necessary to protect the device from overcurrent events such as implementing a current limiting resistor to keep the device below the maximum continuous source and drain current specification.

#### 9.3.5.3 TMUX13xx is Unpowered and the Input Signal has a Voltage Present ($V_{DD}$ = 0 V, $V_{INPUT}$ = 3 V)

Many CMOS switches are unable to support a voltage at the input without a valid supply voltage present, otherwise the voltage will be coupled from input to output and could damage downstream devices or impact power-sequencing. The TMUX13xx circuitry can handle an input signal present without a supply voltage while minimizing power transfer from the input to output of the switch. By limiting the output voltage coupling to 400 mV the TMUX1308 and TMUX1309 help reduce the chance of conduction through any downstream ESD diodes.

## 9.4 Device Functional Modes

When the $\overline{EN}$ pin of the TMUX1308 is pulled low, one of the switches is closed based on the state of the address lines. Similarly, when the $\overline{EN}$ pin of the TMUX1309 is pulled low, two of the switches are closed based on the state of the address lines. When the $\overline{EN}$ pin is pulled high, all the switches are in an open state regardless of the state of the address lines.

Unused logic control pins must be tied to GND or $V_{DD}$ to ensure the device does not consume additional current as highlighted in *Implications of Slow or Floating CMOS Inputs*. Unused signal path inputs (Sx and Dx) should be connected to GND.

## 9.5 Truth Tables

表 9-1 and 表 9-2 provides the truth tables for the TMUX1308 and TMUX1309 respectively.

**表 9-1. TMUX1308 Truth Table**

| $\overline{EN}$ | A2 | A1 | A0 | Selected Signal Path Connected To Drain (D) Pin |
|---|---|---|---|---|
| 0 | 0 | 0 | 0 | S0 |
| 0 | 0 | 0 | 1 | S1 |
| 0 | 0 | 1 | 0 | S2 |
| 0 | 0 | 1 | 1 | S3 |
| 0 | 1 | 0 | 0 | S4 |
| 0 | 1 | 0 | 1 | S5 |
| 0 | 1 | 1 | 0 | S6 |
| 0 | 1 | 1 | 1 | S7 |
| 1 | X(1) | X(1) | X(1) | All channels are off |

(1) X denotes *do not care*.


Copyright © 2022 Texas Instruments Incorporated

表 9-2. TMUX1309 Truth Table

| $\overline{EN}$ | A1 | A0 | Selected Signal Path Connected To Drain (DA and DB) Pins |
|---|---|---|---|
| 0 | 0 | 0 | S0A to DA<br>S0B to DB |
| 0 | 0 | 1 | S1A to DA<br>S1B to DB |
| 0 | 1 | 0 | S2A to DA<br>S2B to DB |
| 0 | 1 | 1 | S3A to DA<br>S3B to DB |
| 1 | X(1) | X(1) | All channels are off |

(1) X denotes *do not care*.

# 10 Application and Implementation

**备注**

Information in the following applications sections is not part of the TI component specification, and TI does not warrant its accuracy or completeness. TI’s customers are responsible for determining suitability of components for their purposes. Customers should validate and test their design implementation to confirm system functionality.

## 10.1 Application Information

The TMUX13xx family offers protection against injection current invents across a wide operating supply range (1.62 V to 5.5 V). These devices include 1.8 V logic compatible control input pins that enable operation in systems with 1.8 V I/O rails. Additionally, the control input pins support Fail-Safe Logic which allows for operation up to 5.5 V, regardless of the state of the supply pin. This feature stops the logic pins from back-powering the supply rail while the injection current circuitry prevents the signal path from back-powering the supply. These features make the TMUX13xx a family of general purpose multiplexers and switches that can reduce system complexity, board size, and overall system cost.

## 10.2 Typical Application

One useful application that takes advantage of the TMUX13xx features is multiplexing various signals into an ADC that is integrated into an MCU. Utilizing an integrated ADC in an MCU allows a system to minimize cost with a potential tradeoff of system performance when compared to an external ADC. The multiplexer allows for multiple inputs or sensors to be monitored with a single ADC pin of the device, which is critical in systems with limited I/O. The TMUX1309 is suitable for a similar design example using differential signals, or as two 4:1 multiplexers.

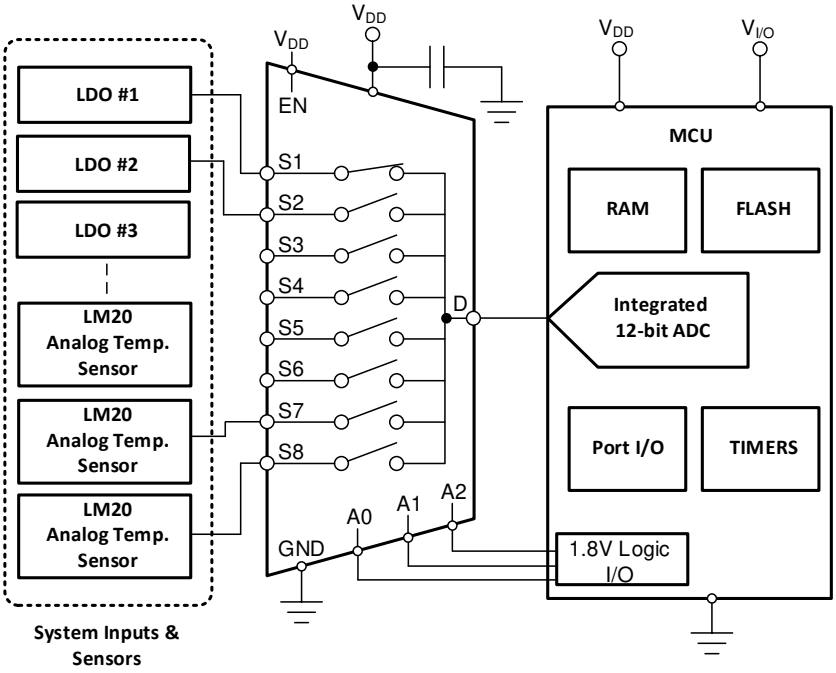


**图 10-1. Multiplexing Signals to Integrated ADC**


Copyright © 2022 Texas Instruments Incorporated

### 10.3 Design Requirements

For this design example, use the parameters listed in 表 10-1.

**表 10-1. Design Parameters**

| PARAMETERS | VALUES |
|---|---|
| Supply ($V_{DD}$) | 5.0 V |
| I/O signal range | 0 V to $V_{DD}$ (Rail to Rail) |
| Control logic thresholds | 1.8 V compatible |

### 10.4 Detailed Design Procedure

The TMUX1308 and TMUX1309 can operate without any external components except for the supply decoupling capacitors. If the parts desired power-up state is disabled, then the enable pin should have a weak pull-up resistor and be controlled by the MCU through the GPIO. All inputs being muxed to the ADC of the MCU must fall within the recommended operating conditions of the TMUX1308 and TMUX1309, including signal range and continuous current. For this design with a supply of 5 V, the signal range can be 0 V to 5 V; the maximum continuous current can be 100 mA at an ambient temperature of 85°C or 25 mA at 125°C.

## 11 Power Supply Recommendations

The TMUX1308 and TMUX1309 devices operate across a wide supply range of 1.62 V to 5.5 V. Note: do not exceed the absolute maximum ratings because stresses beyond the listed ratings can cause permanent damage to the devices.

Power-supply bypassing improves noise margin and prevents switching noise propagation from the $V_{DD}$ supply to other components. Good power-supply decoupling is important to achieve optimum performance. For improved supply noise immunity, use a supply decoupling capacitor ranging from 0.1 μF to 10 μF from $V_{DD}$ to ground. Place the bypass capacitors as close to the power supply pins of the device as possible using low-impedance connections. TI recommends using multi-layer ceramic chip capacitors (MLCCs) that offer low equivalent series resistance (ESR) and inductance (ESL) characteristics for power-supply decoupling purposes. For very sensitive systems, or for systems in harsh noise environments, avoiding the use of vias for connecting the capacitors to the device pins may offer superior noise immunity. The use of multiple vias in parallel lowers the overall inductance and is beneficial for connections to ground planes.

## 12 Layout

### 12.1 Layout Guidelines

When a PCB trace turns a corner at a 90° angle, a reflection can occur. A reflection occurs primarily because of the change of width of the trace. At the apex of the turn, the trace width increases to 1.414 times the width. This increase upsets the transmission-line characteristics, especially the distributed capacitance and self-inductance of the trace which results in the reflection. Not all PCB traces can be straight; therefore, some traces must turn corners. 图 12-1 shows progressively better techniques of rounding corners. Only the last example (BEST) maintains constant trace width and minimizes reflections.

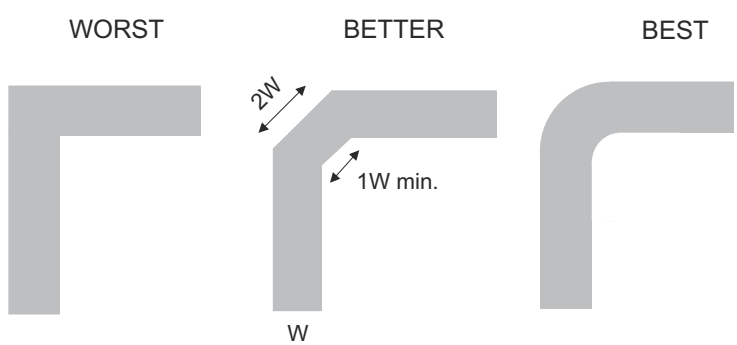


**图 12-1. Trace Example**

Route high-speed signals using a minimum of vias and corners which reduces signal reflections and impedance changes. When a via must be used, increase the clearance size around it to minimize its capacitance. Each via introduces discontinuities in the signal’s transmission line and increases the chance of picking up interference from the other layers of the board. Be careful when designing test points, through-hole pins are not recommended at high frequencies.

图 12-2 shows an example of a PCB layout with the TMUX1308 and TMUX1309. Some key considerations are as follows:

- Decouple the $V_{DD}$ pin with a 0.1-µF capacitor, placed as close to the pin as possible. Make sure that the capacitor voltage rating is sufficient for the $V_{DD}$ supply.
- Keep the input lines as short as possible.
- Use a solid ground plane to help reduce electromagnetic interference (EMI) noise pickup.
- Do not run sensitive analog traces in parallel with digital traces. Avoid crossing digital and analog traces if possible, and only make perpendicular crossings when necessary.

## 12.2 Layout Example

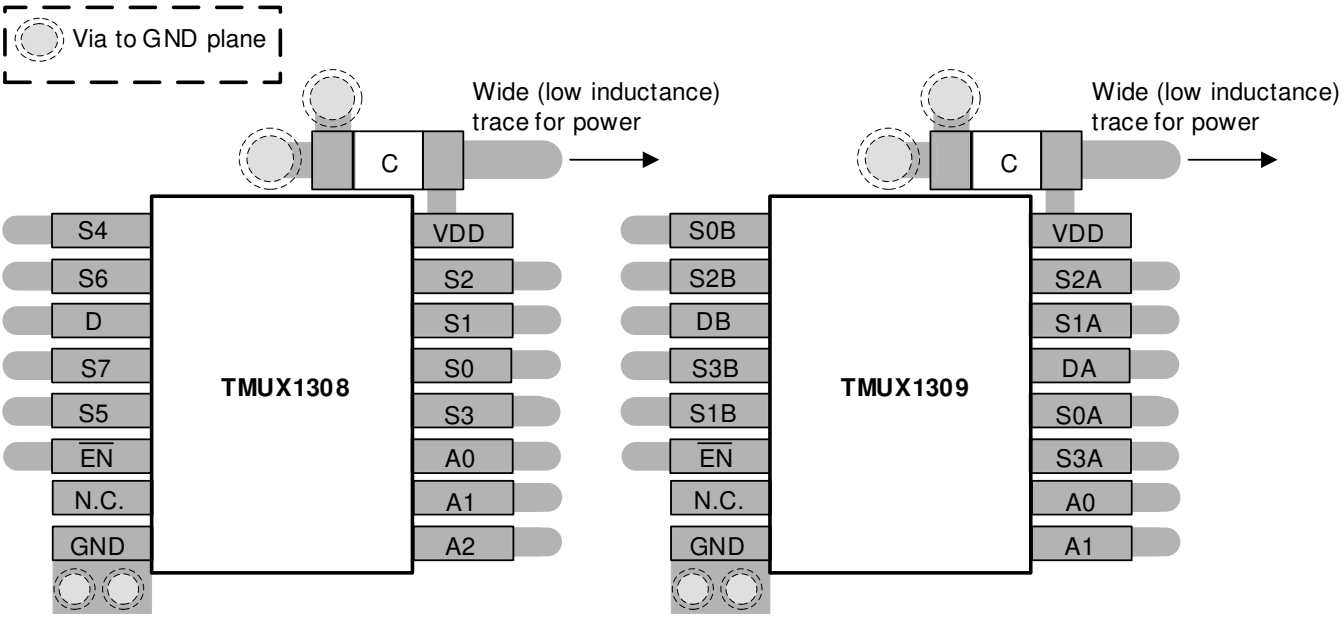


**图 12-2. TMUX1308 and TMUX1309 Layout Example**


Copyright © 2022 Texas Instruments Incorporated

# 13 Device and Documentation Support

## 13.1 Documentation Support

### 13.1.1 Related Documentation

For related documentation, see the following:

- Texas Instruments, *Simplifying Design with 1.8 V logic Muxes and Switches*
- Texas Instruments, *QFN/SON PCB Attachment*
- Texas Instruments, *Quad Flatpack No-Lead Logic Packages*

## 13.2 Receiving Notification of Documentation Updates

To receive notification of documentation updates, navigate to the device product folder on ti.com. In the upper right corner, click on *Alert me* to register and receive a weekly digest of any product information that has changed. For change details, review the revision history included in any revised document.

## 13.3 支持资源

TI E2E™ 支持论坛是工程师的重要参考资料，可直接从专家获得快速、经过验证的解答和设计帮助。搜索现有解答或提出自己的问题可获得所需的快速设计帮助。

链接的内容由各个贡献者“按原样”提供。这些内容并不构成 TI 技术规范，并且不一定反映 TI 的观点；请参阅 TI 的《使用条款》。

## 13.4 Trademarks

TI E2E™ is a trademark of Texas Instruments.
所有商标均为其各自所有者的财产。

## 13.5 Electrostatic Discharge Caution

This integrated circuit can be damaged by ESD. Texas Instruments recommends that all integrated circuits be handled with appropriate precautions. Failure to observe proper handling and installation procedures can cause damage.

ESD damage can range from subtle performance degradation to complete device failure. Precision integrated circuits may be more susceptible to damage because very small parametric changes could cause the device not to meet its published specifications.

## 13.6 术语表

TI 术语表　　本术语表列出并解释了术语、首字母缩略词和定义。

# 14 Mechanical, Packaging, and Orderable Information

The following pages include mechanical, packaging, and orderable information. This information is the most current data available for the designated devices. This data is subject to change without notice and revision of this document. For browser-based versions of this data sheet, refer to the left-hand navigation.

## PACKAGING INFORMATION

| Orderable part number | Status (1) | Material type (2) | Package \| Pins | Package qty \| Carrier | RoHS (3) | Lead finish/ Ball material (4) | MSL rating/ Peak reflow (5) | Op temp (°C) | Part marking (6) |
|---|---|---|---|---|---|---|---|---|---|
| TMUX1308BQBR | Active | Production | WQFN (BQB) \| 16 | 3000 \| LARGE T&R | Yes | NIPDAU | Level-1-260C-UNLIM | -40 to 125 | 1308 |
| TMUX1308BQBR.A | Active | Production | WQFN (BQB) \| 16 | 3000 \| LARGE T&R | Yes | NIPDAU | Level-1-260C-UNLIM | -40 to 125 | 1308 |
| TMUX1308BQBRG4 | Active | Production | WQFN (BQB) \| 16 | 3000 \| LARGE T&R | Yes | NIPDAU | Level-1-260C-UNLIM | -40 to 125 | 1308 |
| TMUX1308BQBRG4.A | Active | Production | WQFN (BQB) \| 16 | 3000 \| LARGE T&R | Yes | NIPDAU | Level-1-260C-UNLIM | -40 to 125 | 1308 |
| TMUX1308DYYR | Active | Production | SOT-23-THIN (DYY) \| 16 | 3000 \| LARGE T&R | Yes | NIPDAU | Level-1-260C-UNLIM | -40 to 125 | TMUX1308 |
| TMUX1308DYYR.A | Active | Production | SOT-23-THIN (DYY) \| 16 | 3000 \| LARGE T&R | Yes | NIPDAU | Level-1-260C-UNLIM | -40 to 125 | TMUX1308 |
| TMUX1308DYYRG4 | Active | Production | SOT-23-THIN (DYY) \| 16 | 3000 \| LARGE T&R | Yes | NIPDAU | Level-1-260C-UNLIM | -40 to 125 | TMUX1308 |
| TMUX1308DYYRG4.A | Active | Production | SOT-23-THIN (DYY) \| 16 | 3000 \| LARGE T&R | Yes | NIPDAU | Level-1-260C-UNLIM | -40 to 125 | TMUX1308 |
| TMUX1308PWR | Active | Production | TSSOP (PW) \| 16 | 2000 \| LARGE T&R | Yes | NIPDAU \| SN | Level-1-260C-UNLIM | -40 to 125 | TM1308 |
| TMUX1308PWR.A | Active | Production | TSSOP (PW) \| 16 | 2000 \| LARGE T&R | Yes | NIPDAU | Level-1-260C-UNLIM | -40 to 125 | TM1308 |
| TMUX1309BQBR | Active | Production | WQFN (BQB) \| 16 | 3000 \| LARGE T&R | Yes | NIPDAU | Level-1-260C-UNLIM | -40 to 125 | 1309 |
| TMUX1309BQBR.A | Active | Production | WQFN (BQB) \| 16 | 3000 \| LARGE T&R | Yes | NIPDAU | Level-1-260C-UNLIM | -40 to 125 | 1309 |
| TMUX1309BQBRG4 | Active | Production | WQFN (BQB) \| 16 | 3000 \| LARGE T&R | Yes | NIPDAU | Level-1-260C-UNLIM | -40 to 125 | 1309 |
| TMUX1309BQBRG4.A | Active | Production | WQFN (BQB) \| 16 | 3000 \| LARGE T&R | Yes | NIPDAU | Level-1-260C-UNLIM | -40 to 125 | 1309 |
| TMUX1309DYYR | Active | Production | SOT-23-THIN (DYY) \| 16 | 3000 \| LARGE T&R | Yes | NIPDAU | Level-1-260C-UNLIM | -40 to 125 | TMUX1309 |
| TMUX1309DYYR.A | Active | Production | SOT-23-THIN (DYY) \| 16 | 3000 \| LARGE T&R | Yes | NIPDAU | Level-1-260C-UNLIM | -40 to 125 | TMUX1309 |
| TMUX1309DYYRG4 | Active | Production | SOT-23-THIN (DYY) \| 16 | 3000 \| LARGE T&R | Yes | NIPDAU | Level-1-260C-UNLIM | -40 to 125 | TMUX1309 |
| TMUX1309DYYRG4.A | Active | Production | SOT-23-THIN (DYY) \| 16 | 3000 \| LARGE T&R | Yes | NIPDAU | Level-1-260C-UNLIM | -40 to 125 | TMUX1309 |
| TMUX1309PWR | Active | Production | TSSOP (PW) \| 16 | 2000 \| LARGE T&R | Yes | NIPDAU \| SN | Level-1-260C-UNLIM | -40 to 125 | TM1309 |
| TMUX1309PWR.A | Active | Production | TSSOP (PW) \| 16 | 2000 \| LARGE T&R | Yes | NIPDAU | Level-1-260C-UNLIM | -40 to 125 | TM1309 |

(1) **Status:** For more details on status, see our product life cycle.

(2) **Material type:** When designated, preproduction parts are prototypes/experimental devices, and are not yet approved or released for full production. Testing and final process, including without limitation quality assurance, reliability performance testing, and/or process qualification, may not yet be complete, and this item is subject to further changes or possible discontinuation. If available for ordering, purchases will be subject to an additional waiver at checkout, and are intended for early internal evaluation purposes only. These items are sold without warranties of any kind.

(3) **RoHS values:** Yes, No, RoHS Exempt. See the TI RoHS Statement for additional information and value definition.

(4) **Lead finish/Ball material:** Parts may have multiple material finish options. Finish options are separated by a vertical ruled line. Lead finish/Ball material values may wrap to two lines if the finish value exceeds the maximum column width.

(5) **MSL rating/Peak reflow:** The moisture sensitivity level ratings and peak solder (reflow) temperatures. In the event that a part has multiple moisture sensitivity ratings, only the lowest level per JEDEC standards is shown. Refer to the shipping label for the actual reflow temperature that will be used to mount the part to the printed circuit board.

(6) **Part marking:** There may be an additional marking, which relates to the logo, the lot trace code information, or the environmental category of the part.

Multiple part markings will be inside parentheses. Only one part marking contained in parentheses and separated by a "~" will appear on a part. If a line is indented then it is a continuation of the previous line and the two combined represent the entire part marking for that device.

**Important Information and Disclaimer:**The information provided on this page represents TI's knowledge and belief as of the date that it is provided. TI bases its knowledge and belief on information provided by third parties, and makes no representation or warranty as to the accuracy of such information. Efforts are underway to better integrate information from third parties. TI has taken and continues to take reasonable steps to provide representative and accurate information but may not have conducted destructive testing or chemical analysis on incoming materials and chemicals. TI and TI suppliers consider certain information to be proprietary, and thus CAS numbers and other limited information may not be available for release.

In no event shall TI's liability arising out of such information exceed the total purchase price of the TI part(s) at issue in this document sold by TI to Customer on an annual basis.

**OTHER QUALIFIED VERSIONS OF TMUX1308, TMUX1309 :**

- Automotive : TMUX1308-Q1, TMUX1309-Q1

NOTE: Qualified Version Definitions:

- Automotive - Q100 devices qualified for high-reliability automotive applications targeting zero defects

## TAPE AND REEL INFORMATION

**REEL DIMENSIONS**

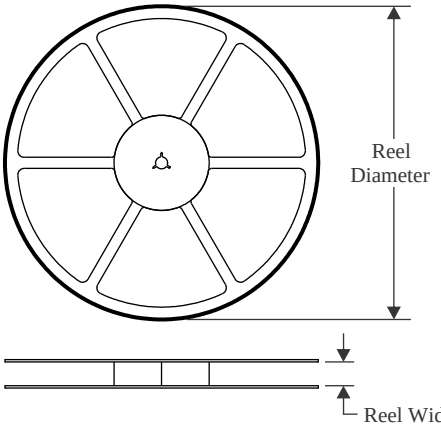


**TAPE DIMENSIONS**

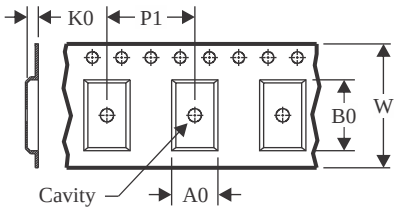


| | |
|---|---|
| A0 | Dimension designed to accommodate the component width |
| B0 | Dimension designed to accommodate the component length |
| K0 | Dimension designed to accommodate the component thickness |
| W | Overall width of the carrier tape |
| P1 | Pitch between successive cavity centers |

**QUADRANT ASSIGNMENTS FOR PIN 1 ORIENTATION IN TAPE**

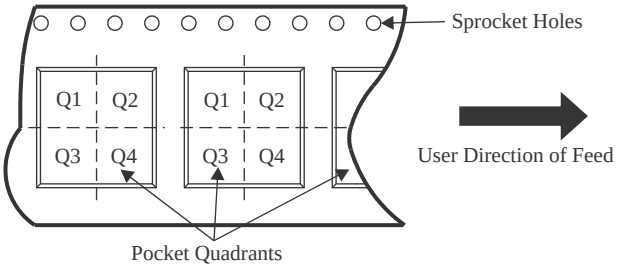


*All dimensions are nominal

| Device | Package Type | Package Drawing | Pins | SPQ | Reel Diameter (mm) | Reel Width W1 (mm) | A0 (mm) | B0 (mm) | K0 (mm) | P1 (mm) | W (mm) | Pin1 Quadrant |
|---|---|---|---|---|---|---|---|---|---|---|---|---|
| TMUX1308BQBR | WQFN | BQB | 16 | 3000 | 180.0 | 12.4 | 2.8 | 3.8 | 1.2 | 4.0 | 12.0 | Q1 |
| TMUX1308BQBRG4 | WQFN | BQB | 16 | 3000 | 180.0 | 12.4 | 2.8 | 3.8 | 1.2 | 4.0 | 12.0 | Q1 |
| TMUX1308DYYR | SOT-23-THIN | DYY | 16 | 3000 | 330.0 | 12.4 | 4.8 | 3.6 | 1.6 | 8.0 | 12.0 | Q3 |
| TMUX1308DYYRG4 | SOT-23-THIN | DYY | 16 | 3000 | 330.0 | 12.4 | 4.8 | 3.6 | 1.6 | 8.0 | 12.0 | Q3 |
| TMUX1308PWR | TSSOP | PW | 16 | 2000 | 330.0 | 12.4 | 6.9 | 5.6 | 1.6 | 8.0 | 12.0 | Q1 |
| TMUX1308PWR | TSSOP | PW | 16 | 2000 | 330.0 | 12.4 | 6.9 | 5.6 | 1.6 | 8.0 | 12.0 | Q1 |
| TMUX1309BQBR | WQFN | BQB | 16 | 3000 | 180.0 | 12.4 | 2.8 | 3.8 | 1.2 | 4.0 | 12.0 | Q1 |
| TMUX1309BQBRG4 | WQFN | BQB | 16 | 3000 | 180.0 | 12.4 | 2.8 | 3.8 | 1.2 | 4.0 | 12.0 | Q1 |
| TMUX1309DYYR | SOT-23-THIN | DYY | 16 | 3000 | 330.0 | 12.4 | 4.8 | 3.6 | 1.6 | 8.0 | 12.0 | Q3 |
| TMUX1309DYYRG4 | SOT-23-THIN | DYY | 16 | 3000 | 330.0 | 12.4 | 4.8 | 3.6 | 1.6 | 8.0 | 12.0 | Q3 |
| TMUX1309PWR | TSSOP | PW | 16 | 2000 | 330.0 | 12.4 | 6.9 | 5.3 | 1.6 | 8.0 | 12.0 | Q1 |
| TMUX1309PWR | TSSOP | PW | 16 | 2000 | 330.0 | 12.4 | 6.9 | 5.6 | 1.6 | 8.0 | 12.0 | Q1 |
| TMUX1309PWR | TSSOP | PW | 16 | 2000 | 330.0 | 12.4 | 6.9 | 5.6 | 1.6 | 8.0 | 12.0 | Q1 |

TAPE AND REEL BOX DIMENSIONS

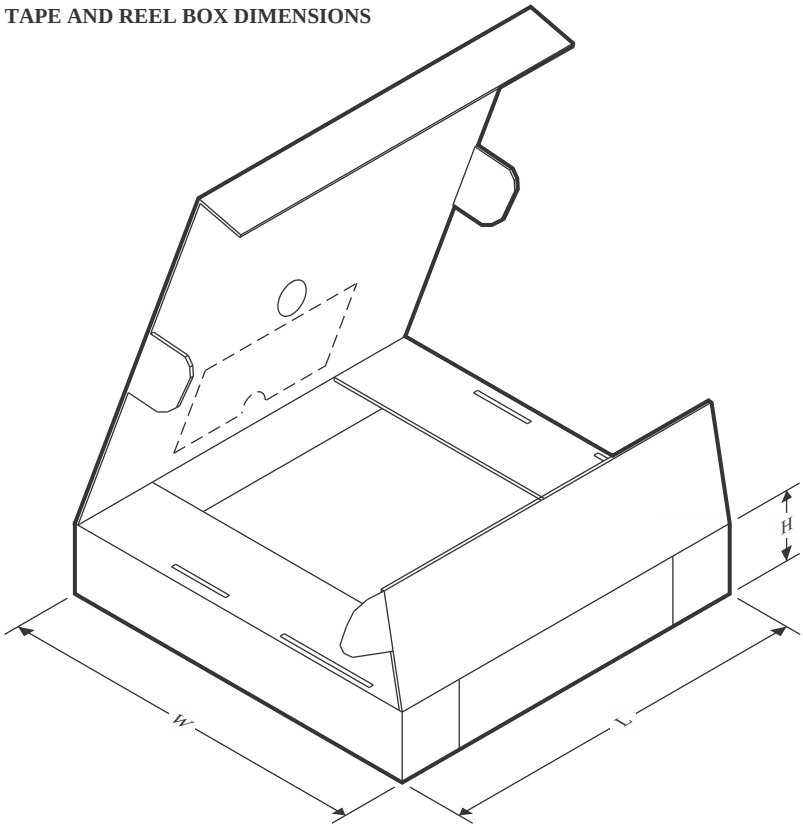


*All dimensions are nominal

| Device | Package Type | Package Drawing | Pins | SPQ | Length (mm) | Width (mm) | Height (mm) |
|---|---|---|---|---|---|---|---|
| TMUX1308BQBR | WQFN | BQB | 16 | 3000 | 210.0 | 185.0 | 35.0 |
| TMUX1308BQBRG4 | WQFN | BQB | 16 | 3000 | 210.0 | 185.0 | 35.0 |
| TMUX1308DYYR | SOT-23-THIN | DYY | 16 | 3000 | 336.6 | 336.6 | 31.8 |
| TMUX1308DYYRG4 | SOT-23-THIN | DYY | 16 | 3000 | 336.6 | 336.6 | 31.8 |
| TMUX1308PWR | TSSOP | PW | 16 | 2000 | 356.0 | 356.0 | 35.0 |
| TMUX1308PWR | TSSOP | PW | 16 | 2000 | 353.0 | 353.0 | 32.0 |
| TMUX1309BQBR | WQFN | BQB | 16 | 3000 | 210.0 | 185.0 | 35.0 |
| TMUX1309BQBRG4 | WQFN | BQB | 16 | 3000 | 210.0 | 185.0 | 35.0 |
| TMUX1309DYYR | SOT-23-THIN | DYY | 16 | 3000 | 336.6 | 336.6 | 31.8 |
| TMUX1309DYYRG4 | SOT-23-THIN | DYY | 16 | 3000 | 336.6 | 336.6 | 31.8 |
| TMUX1309PWR | TSSOP | PW | 16 | 2000 | 367.0 | 367.0 | 35.0 |
| TMUX1309PWR | TSSOP | PW | 16 | 2000 | 353.0 | 353.0 | 32.0 |
| TMUX1309PWR | TSSOP | PW | 16 | 2000 | 356.0 | 356.0 | 35.0 |

# GENERIC PACKAGE VIEW

## BQB 16

## WQFN - 0.8 mm max height

**2.5 x 3.5, 0.5 mm pitch**

PLASTIC QUAD FLATPACK - NO LEAD

This image is a representation of the package family, actual package may vary.
Refer to the product data sheet for package details.

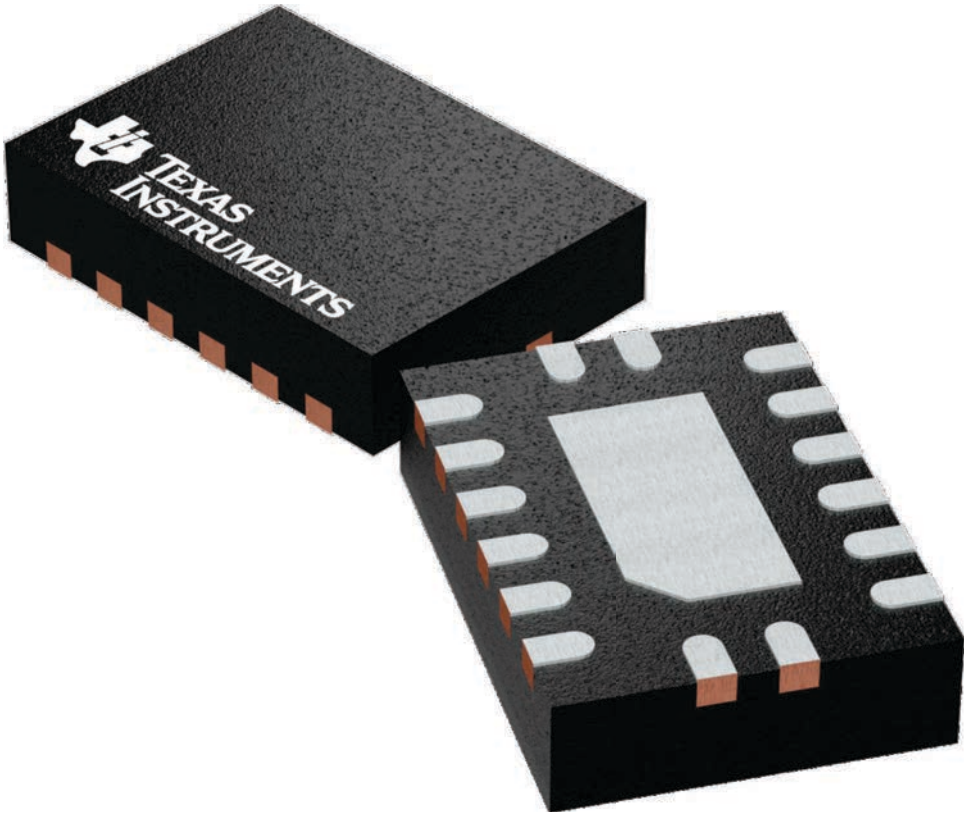


4226161/A

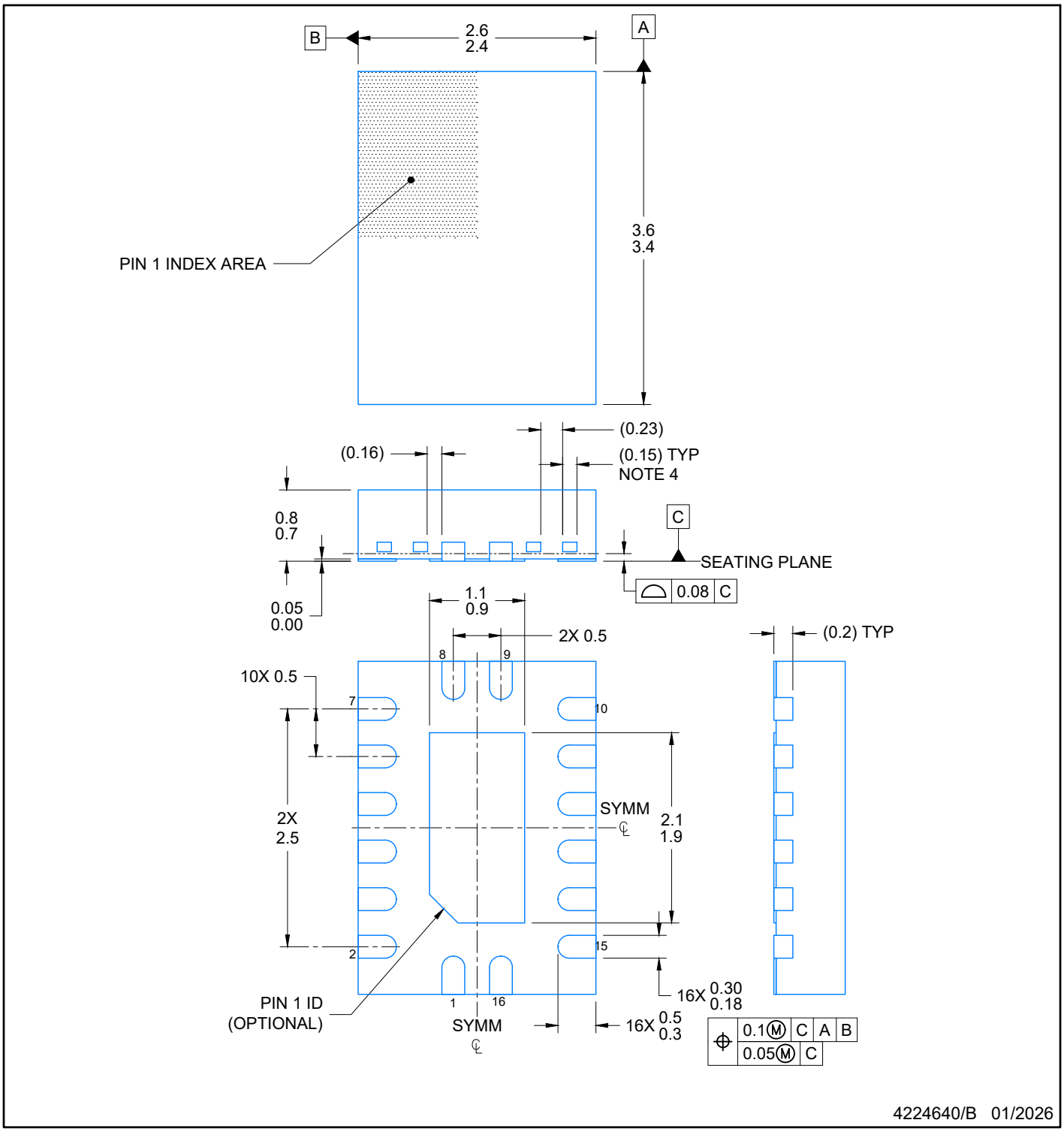


NOTES:

1. All linear dimensions are in millimeters. Any dimensions in parenthesis are for reference only. Dimensioning and tolerancing per ASME Y14.5M.
2. This drawing is subject to change without notice.
3. The package thermal pad must be soldered to the printed circuit board for optimal thermal and mechanical performance.
4. Features may differ or may not be present

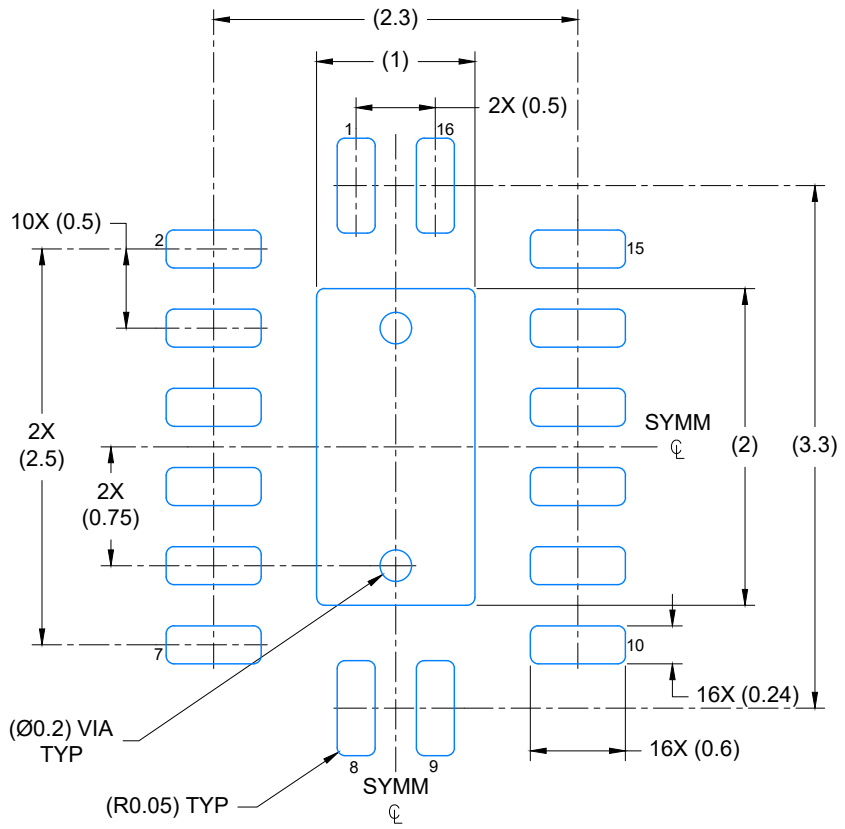


LAND PATTERN EXAMPLE
EXPOSED METAL SHOWN
SCALE: 20X

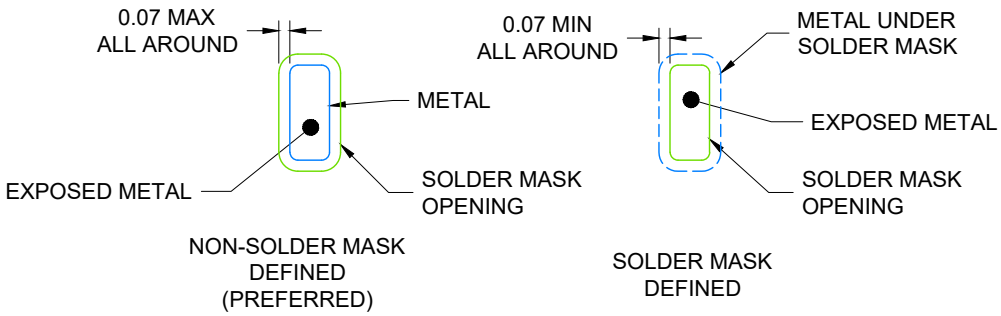


4224640/B 01/2026

1. NOTES: (continued)

   5. This package is designed to be soldered to a thermal pad on the board. For more information, see Texas Instruments literature number SLUA271 (www.ti.com/lit/slua271).

   6. Vias are optional depending on application, refer to device data sheet. If any vias are implemented, refer to their locations shown on this view. It is recommended that vias under paste be filled, plugged or tented.

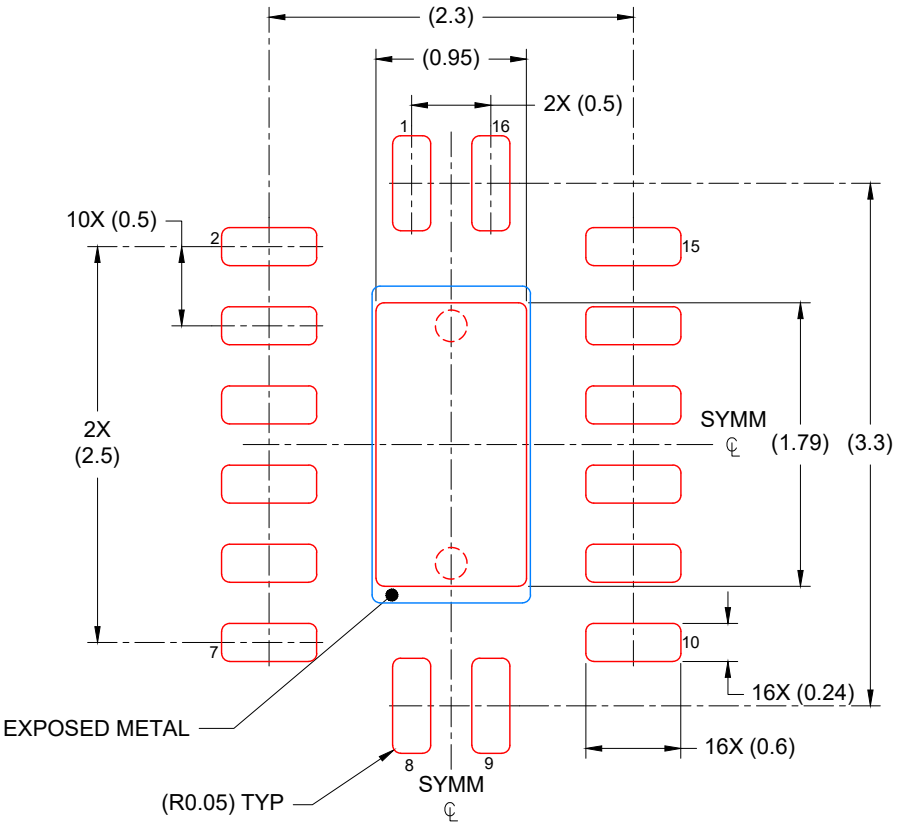


SOLDER PASTE EXAMPLE
BASED ON 0.125 mm THICK STENCIL

EXPOSED PAD
85% PRINTED COVERAGE BY AREA
SCALE: 20X

4224640/B 01/2026

NOTES: (continued)

7. Laser cutting apertures with trapezoidal walls and rounded corners may offer better paste release. IPC-7525 may have alternate design recommendations.

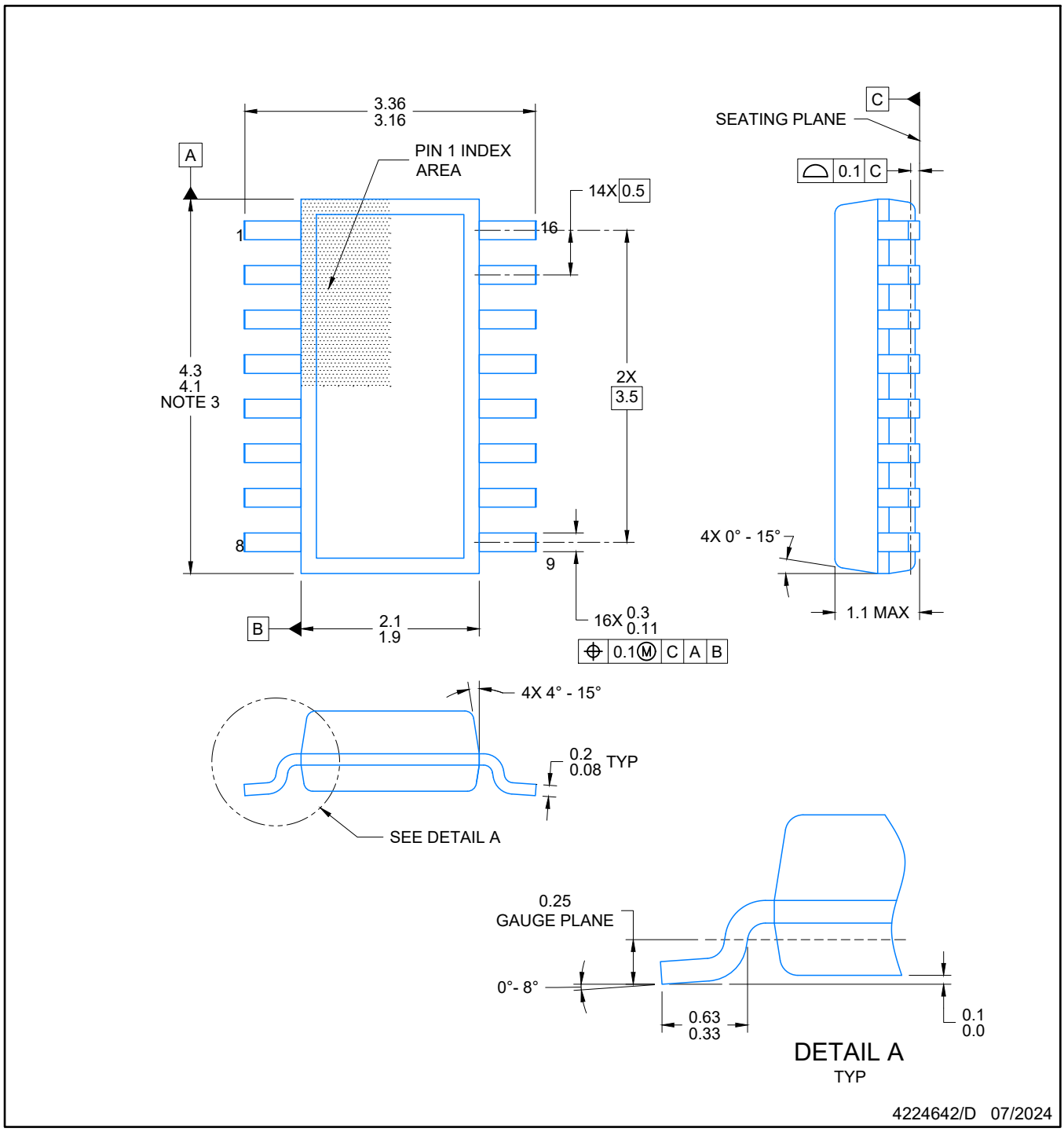


NOTES:

1. All linear dimensions are in millimeters. Any dimensions in parenthesis are for reference only. Dimensioning and tolerancing per ASME Y14.5M.
2. This drawing is subject to change without notice.
3. This dimension does not include mold flash, protrusions, or gate burrs. Mold flash, protrusions, or gate burrs shall not exceed 0.15 per side.
4. This dimension does not include interlead flash. Interlead flash shall not exceed 0.50 per side.
5. Reference JEDEC Registration MO-345, Variation AA

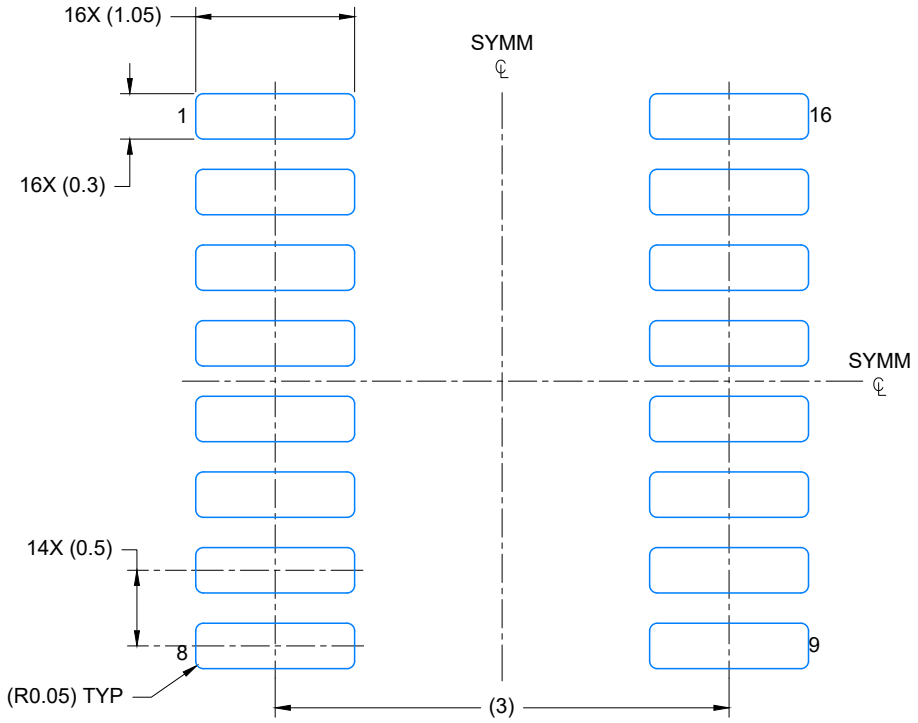


LAND PATTERN EXAMPLE
EXPOSED METAL SHOWN
SCALE: 20X

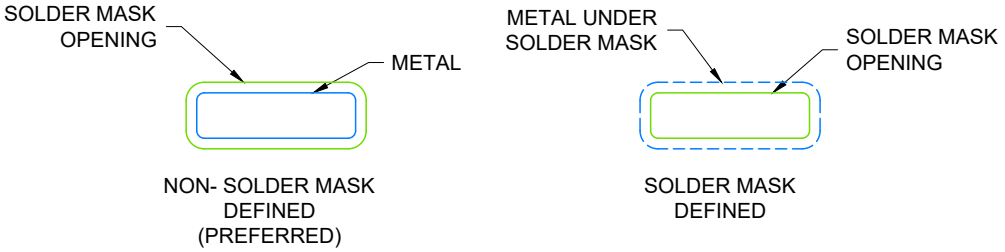


SOLDER MASK DETAILS

4224642/D 07/2024

NOTES: (continued)

6. Publication IPC-7351 may have alternate designs.
7. Solder mask tolerances between and around signal pads can vary based on board fabrication site.

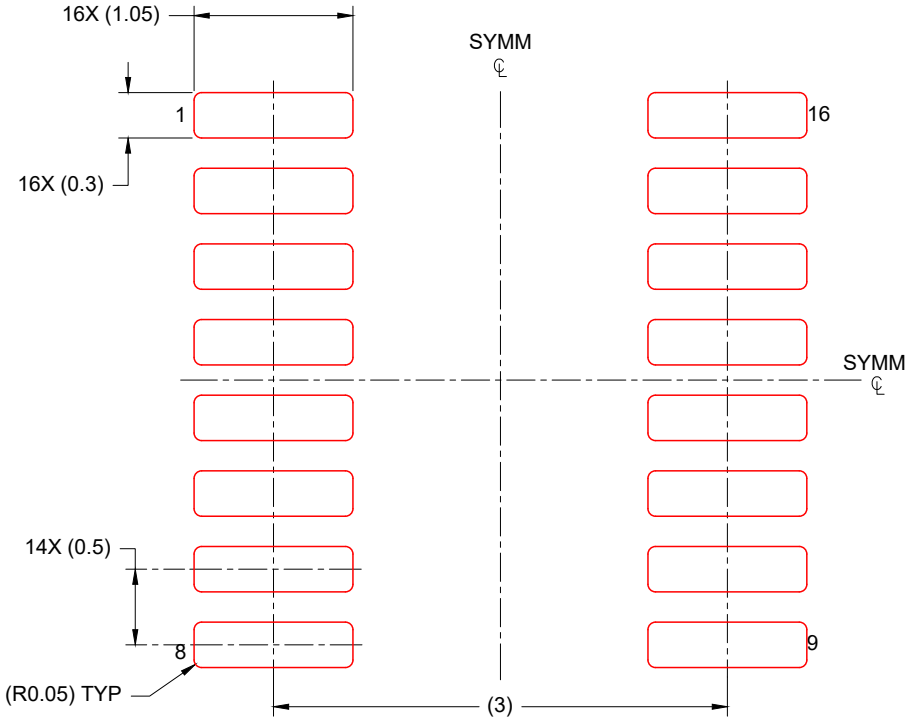


SOLDER PASTE EXAMPLE
BASED ON 0.125 mm THICK STENCIL
SCALE: 20X

4224642/D 07/2024

NOTES: (continued)

8. Laser cutting apertures with trapezoidal walls and rounded corners may offer better paste release. IPC-7525 may have alternate design recommendations.
9. Board assembly site may have different recommendations for stencil design.

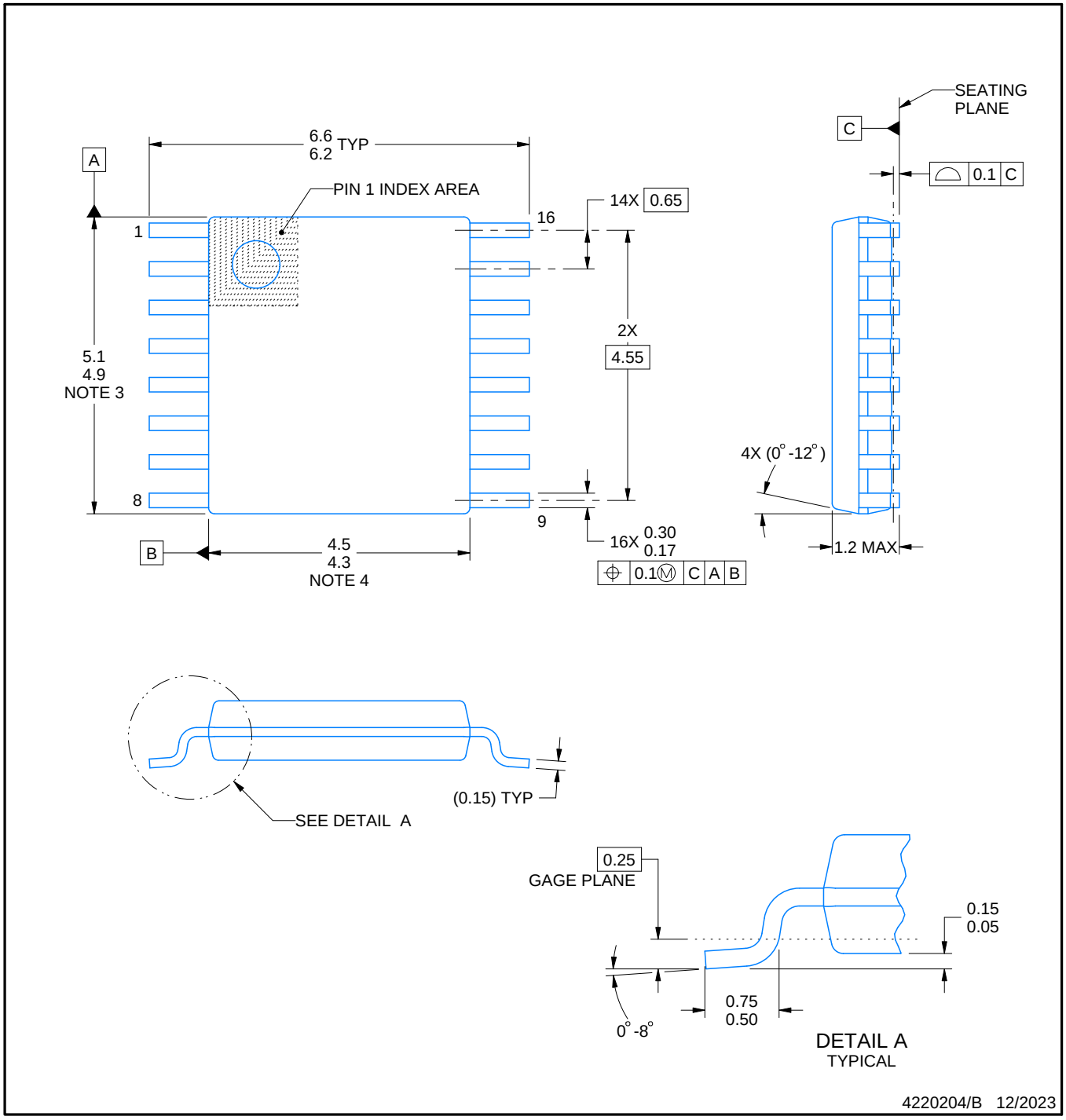


NOTES:

1. All linear dimensions are in millimeters. Any dimensions in parenthesis are for reference only. Dimensioning and tolerancing per ASME Y14.5M.
2. This drawing is subject to change without notice.
3. This dimension does not include mold flash, protrusions, or gate burrs. Mold flash, protrusions, or gate burrs shall not exceed 0.15 mm per side.
4. This dimension does not include interlead flash. Interlead flash shall not exceed 0.25 mm per side.
5. Reference JEDEC registration MO-153.

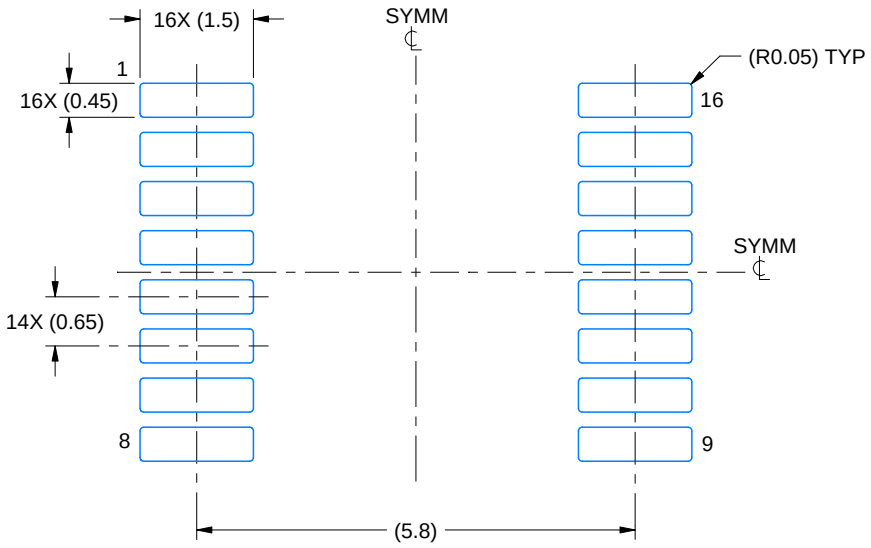


LAND PATTERN EXAMPLE
EXPOSED METAL SHOWN
SCALE: 10X

NON-SOLDER MASK DEFINED (PREFERRED)

SOLDER MASK DEFINED

SOLDER MASK DETAILS

4220204/B 12/2023

NOTES: (continued)

6. Publication IPC-7351 may have alternate designs.
7. Solder mask tolerances between and around signal pads can vary based on board fabrication site.

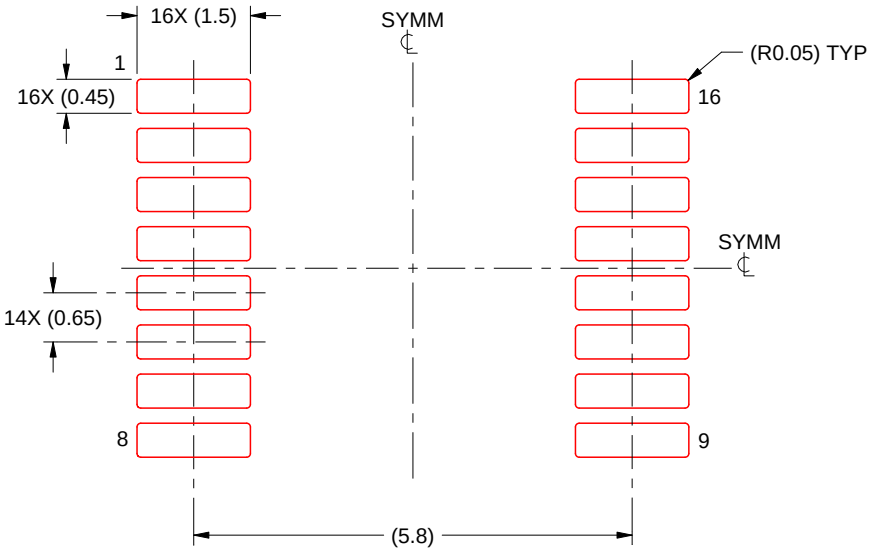


SOLDER PASTE EXAMPLE
BASED ON 0.125 mm THICK STENCIL
SCALE: 10X

4220204/B 12/2023

NOTES: (continued)

8. Laser cutting apertures with trapezoidal walls and rounded corners may offer better paste release. IPC-7525 may have alternate design recommendations.
9. Board assembly site may have different recommendations for stencil design.

# 重要通知和免责声明

TI“按原样”提供技术和可靠性数据（包括数据表）、设计资源（包括参考设计）、应用或其他设计建议、网络工具、安全信息和其他资源，不保证没有瑕疵且不做出任何明示或暗示的担保，包括但不限于对适销性、与某特定用途的适用性或不侵犯任何第三方知识产权的暗示担保。

这些资源可供使用 TI 产品进行设计的熟练开发人员使用。您将自行承担以下全部责任：(1) 针对您的应用选择合适的 TI 产品，(2) 设计、验证并测试您的应用，(3) 确保您的应用满足相应标准以及任何其他安全、安保法规或其他要求。

这些资源如有变更，恕不另行通知。TI 授权您仅可将这些资源用于研发本资源所述的 TI 产品的相关应用。严禁以其他方式对这些资源进行复制或展示。您无权使用任何其他 TI 知识产权或任何第三方知识产权。对于因您对这些资源的使用而对 TI 及其代表造成的任何索赔、损害、成本、损失和债务，您将全额赔偿，TI 对此概不负责。

TI 提供的产品受 TI 销售条款)、TI 通用质量指南 或 ti.com 上其他适用条款或 TI 产品随附的其他适用条款的约束。TI 提供这些资源并不会扩展或以其他方式更改 TI 针对 TI 产品发布的适用的担保或担保免责声明。 除非德州仪器 (TI) 明确将某产品指定为定制产品或客户特定产品，否则其产品均为按确定价格收入目录的标准通用器件。

TI 反对并拒绝您可能提出的任何其他或不同的条款。

版权所有 © 2026，德州仪器 (TI) 公司

最后更新日期：2025 年 10 月