TMP461-SP 耐辐射 (RHA)、高精度远程和本地温度传感器

1 特性

- 符合 QMLV 标准：5962R-1721801VXC
  - 热增强型 HKU 封装
  - 耐辐射 (RHA)：在 10mrad/s 的低剂量率 (LDR) 下，可抵抗高达 100krad(Si) 的电离辐射总剂量 (TID)
  - 单粒子闩锁 (SEL) 在 125°C 下的抗扰度可达 76MeV·cm^2/mg
  - 10 引脚 HKU 陶瓷封装
- 远程二极管温度传感器精度：±1.5°C（在 [–55°C 至 125°C] 工作温度范围内）
- 本地温度传感器精度：±2°C（在 [–55°C 至 125°C] 工作温度范围内）
- 支持在 –64°C 到 191°C 的温度范围内测量远程二极管温度
- 本地和远程通道的分辨率：0.0625°C
- 电源和逻辑电压范围：1.7V 至 3.6V
- 35µA 工作电流 (1SPS)，
  3µA 关断电流
- 串联电阻抵消
- η 因子和偏移校正
- 可编程数字滤波器
- 二极管故障检测
- 两线制和 SMBus™串行接口与引脚可编程的地址兼容
-

2 应用

- 航天器 FPGA、ADC、DAC 和 ASIC 温度监控
- 航天器维护和遥测

简化框图

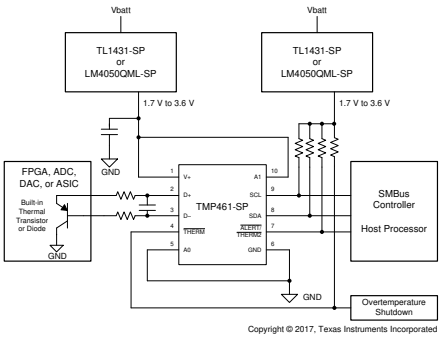

3 说明

TMP461-SP 器件是一款高精度、低功耗的耐辐射远程温度传感器监控器，内置有一个本地温度传感器。这类远程温度传感器通常采用低成本分立式 NPN 或 PNP 晶体管，或者基板热晶体管/二极管，这些器件都是微处理器、模数转换器 (ADC)、数模转换器 (DAC)、微控制器或现场可编程门阵列 (FPGA) 中不可或缺的部件。本地和远程传感器均用 12 位数字编码表示温度，分辨率为 0.0625°C。此两线制串口接受 SMBus 通信协议，以及多达 9 个不同的引脚可编程地址。

该 器件 将诸如串联电阻抵消、可编程非理想性因子（η 因子）、可编程偏移、可编程温度限制和可编程数字滤波器等高级特性完美结合，提供了一套准确度和抗扰度更高且稳健耐用的温度监控解决方案。

TMP461-SP 是在各种分布式遥测应用中进行多位置高精度温度测量的 理想选择。这类集成式本地和远程温度传感器可提供一种简单的方法来测量温度梯度，进而简化了航天器维护活动。该器件的额定电源电压范围为 1.7V 至 3.6V，额定工作温度范围为 -55°C 至 125°C。

器件信息(1)

器件型号	等级	封装
5962-1721801VXC	QMLV	10 引线 CFP [HKU] 7.02mm × 6.86mm
TMP461HKU/EM	工程样片(2)	10 引线 CFP [HKU] 7.02mm × 6.86mm
TMP461EVM-CVAL	陶瓷评估板	
5962R1721801VXC	RHA - 100krad(Si)	10 引线 CFP [HKU] 7.02mm × 6.86mm

(1) 如需了解所有可用封装，请参阅数据表末尾的可订购产品附录。

(2) 这些器件仅适用于工程评估。器件按照不合规的流程进行加工处理。这些部件不适用于质检、生产、辐射测试或飞行。无法保证器件在整个军用额定温度范围（-55°C 至 125°C）内或其使用寿命内性能无恙。

本文档旨在为方便起见，提供有关 TI 产品中文版本的信息，以确认产品的概要。 有关适用的官方英文版本的最新信息，请访问 www.ti.com，其内容始终优先。 TI 不保证翻译的准确性和有效性。 在实际设计之前，请务必参考最新版本的英文版本。

目录

1 特性 ... 1
2 应用 ... 1
3 说明 ... 1
4 修订历史记录 ... 2
5 **Pin Configuration and Functions** ... 3
6 **Specifications** ... 4
6.1 Absolute Maximum Ratings ... 4
6.2 ESD Ratings ... 4
6.3 Recommended Operating Conditions ... 4
6.4 Thermal Information ... 4
6.5 Electrical Characteristics ... 5
6.6 Two-Wire Timing Requirements ... 6
6.7 Typical Characteristics ... 7
7 **Detailed Description** ... 9
7.1 Overview ... 9
7.2 Functional Block Diagram ... 9
7.3 Feature Description ... 10
7.4 Device Functional Modes ... 13
7.5 Programming ... 14
7.6 Register Map ... 18
8 **Application and Implementation** ... 24
8.1 Application Information ... 24
8.2 Typical Application ... 24
8.3 Radiation Environments ... 27
9 **Power Supply Recommendations** ... 27
10 **Layout** ... 28
10.1 Layout Guidelines ... 28
10.2 Layout Example ... 29
11 器件和文档支持 ... 30
11.1 接收文档更新通知 ... 30
11.2 社区资源 ... 30
11.3 商标 ... 30
11.4 静电放电警告 ... 30
11.5 Glossary ... 30
12 机械、封装和可订购信息 ... 30

4 修订历史记录

注：之前版本的页码可能与当前版本有所不同。

Changes from Revision A (December 2017) to Revision B **Page**

- 将数据表标题从“TMP461-SP 耐辐射远程和本地数字温度传感器”更改为“TMP461-SP 耐辐射 (RHA)、高精度远程和本地温度传感器” ... 1
- 删除了 50krad(Si) HDR 表述（位于*特性* 部分）切换到 RHA 滤波器 ... 1
- 向*器件信息* 表添加了 5962R1721801VXC RHA 可订购信息 ... 1
- Added tablenote to thermal pad description in the *Pin Functions* table ... 3
- Updated layout example for CFP package ... 29

Changes from Original (September 2017) to Revision A **Page**

- 已更改 将器件状态从*预告信息* 更改为*生产数据* ... 1

Copyright © 2017–2020, Texas Instruments Incorporated

5 Pin Configuration and Functions

HKU Package
10-Pin CFP
Top View

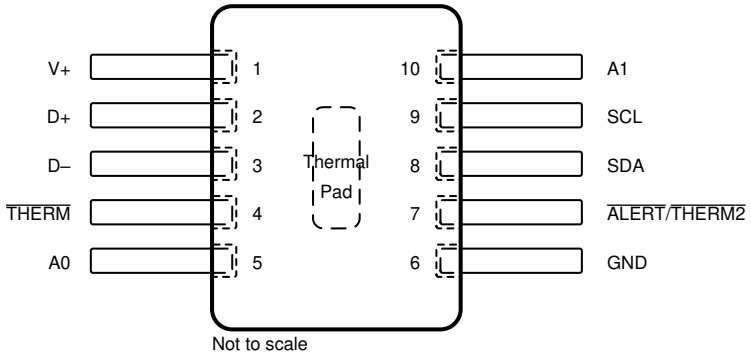

Not to scale

Pin Functions

PIN		TYPE	DESCRIPTION
NAME	NO.		
A0	5	Digital input	Address select. Connect to GND, V+, or leave floating.
A1	10	Digital input	Address select. Connect to GND, V+, or leave floating.
$\overline{\text{ALERT}}$/$\overline{\text{THERM2}}$	7	Digital output	Interrupt or SMBus alert output. Can be configured as a second $\overline{\text{THERM}}$ output. Open-drain; requires a pullup resistor to a voltage between 1.7 V and 3.6 V.
D–	3	Analog input	Negative connection to remote temperature sensor.
D+	2	Analog input	Positive connection to remote temperature sensor.
GND	6	Ground	Supply ground connection.
SCL	9	Digital input	Serial clock line for SMBus. Input; requires a pullup resistor to a voltage between 1.7 V and 3.6 V if driven by an open-drain output.
SDA	8	Bidirectional digital input-output	Serial data line for SMBus. Open-drain; requires a pullup resistor to a voltage between 1.7 V and 3.6 V.
$\overline{\text{THERM}}$	4	Digital output	Thermal shutdown or fan-control pin. Open-drain; requires a pullup resistor to a voltage between 1.7 V and 3.6 V.
V+	1	Power supply	Positive supply voltage, 1.7 V to 3.6 V.
Thermal Pad(1)	--	--	The exposed thermal pad of the HKU package should be connected to a wide ground plane for effective thermal conduction.

(1) Thermal pad and package lid are internally connected to ground.

Copyright © 2017–2020, Texas Instruments Incorporated

6 Specifications

6.1 Absolute Maximum Ratings

over operating temperature range (unless otherwise noted)(1)

		MIN	MAX	UNIT
Power supply, V+		–0.3	6	V
Input voltage	$\overline{\text{THERM}}$, $\overline{\text{ALERT}}$/$\overline{\text{THERM2}}$, SDA and SCL only	–0.3	6	V
	D+, A0, A1	–0.3	(V+) + 0.3	
	D– only	–0.3	0.3	
Input current			10	mA
Operating temperature		–55	150	°C
Junction temperature, T_J max			150	°C
Storage temperature, T_{stg}		–60	150	°C

(1) Stresses above these ratings may cause permanent damage. Exposure to absolute maximum conditions for extended periods may degrade device reliability. These are stress ratings only, and functional operation of the device at these or any other conditions beyond those specified is not implied.

6.2 ESD Ratings

			VALUE	UNIT
$V_{(ESD)}$	Electrostatic discharge	Human-body model (HBM), per ANSI/ESDA/JEDEC JS-001(1)	±2000	V

(1) JEDEC document JEP155 states that 500-V HBM allows safe manufacturing with a standard ESD control process.

6.3 Recommended Operating Conditions

		MIN	NOM	MAX	UNIT
V+	Supply voltage	1.7	3.3	3.6	V
T_A	Operating temperature	–55		125	°C

6.4 Thermal Information

THERMAL METRIC(1)		TMP461-SP HKU (CFP) 10 PINS	UNIT
$R_{\theta JA}$	Junction-to-ambient thermal resistance	39.2	°C/W
$R_{\theta JC(top)}$	Junction-to-case (top) thermal resistance	20.7	°C/W
$R_{\theta JB}$	Junction-to-board thermal resistance	20.9	°C/W
ψ_{JT}	Junction-to-top characterization parameter	11.7	°C/W
ψ_{JB}	Junction-to-board characterization parameter	21.0	°C/W
$R_{\theta JC(bot)}$	Junction-to-case (bottom) thermal resistance	8.7	°C/W

(1) For more information about traditional and new thermal metrics, see the *Semiconductor and IC Package Thermal Metrics* application report, SPRA953.

Copyright © 2017–2020, Texas Instruments Incorporated

6.5 Electrical Characteristics

The specifications shown below correspond to the respectively identified subgroup temperature (see 表 1). V+ = 1.7 V to 3.6 V, unless otherwise noted.

PARAMETER			CONDITIONS	SUBGROUP(1)	MIN	TYP	MAX	UNIT
TEMPERATURE MEASUREMENT								
TA_{LOCAL}	Local temperature sensor accuracy		V+ = 1.7 V to 3.6 V	[1, 2, 3]	–2	±0.5	2	°C
TA_{REMOTE}	Remote temperature sensor accuracy		V+ = 1.7 V to 3.6 V	[1, 2, 3]	–1.5	±0.125	1.5	°C
	Temperature sensor error versus supply (local or remote)		V+ = 1.7 V to 3.6 V	[1, 2, 3]	–0.3	±0.1	0.3	°C/V
	Temperature resolution (local and remote)					0.0625		°C
	ADC conversion time		One-shot mode, per channel (local or remote)	[9, 10, 11]		15	17	ms
	ADC resolution			[4, 5, 6]		12		Bits
	Remote sensor source current	High	Series resistance 1 kΩ (max)	[1, 2, 3]	88	120	152	µA
		Medium		[1, 2, 3]	33	45	57	
		Low		[1, 2, 3]	5.5	7.5	9.5	
η	Remote transistor ideality factor		TMP461-SP optimized ideality factor			1.008		
SERIAL INTERFACE								
V_{IH}	High-level input voltage			[1, 2, 3]	1.4			V
V_{IL}	Low-level input voltage			[1, 2, 3]			0.45	V
	Hysteresis					200		mV
	SDA output-low sink current			[1, 2, 3]	6			mA
V_{OL}	Low-level output voltage		I_O = –6 mA	[1, 2, 3]		0.15	0.4	V
	Serial bus input leakage current		0 V ≤ V_{IN} ≤ 3.6 V	[1, 2, 3]	–1		1	µA
	Serial bus input capacitance		SCL			3		pF
			SDA			4.6		pF
	Serial bus clock frequency			[9, 10, 11]			2.17	MHz
	Serial bus timeout			[9, 10, 11]	20	25	30	ms
DIGITAL INPUTS (A0, A1)								
V_{IH}	High-level input voltage			[1, 2, 3]	0.9(V+)		(V+) + 0.3	V
V_{IL}	Low-level input voltage			[1, 2, 3]	–0.3		0.1(V+)	V
	Input leakage current		0 V ≤ V_{IN} ≤ 3.6 V	[1, 2, 3]	–1		1	µA
	Input capacitance					2.5		pF
DIGITAL OUTPUTS ($\overline{THERM}$, $\overline{ALERT}$/$\overline{THERM2}$)								
	Output-low sink current			[1, 2, 3]	6			mA
V_{OL}	Low-level output voltage		I_O = –6 mA	[1, 2, 3]		0.15	0.4	V
I_{OH}	High-level output leakage current		V_O = V+	[1, 2, 3]			1	µA
POWER SUPPLY								
V+	Specified supply voltage range			[1, 2, 3]	1.7		3.6	V
I_Q	Quiescent current		Active conversion, local sensor	[1, 2, 3]		240	375	µA
			Active conversion, remote sensor	[1, 2, 3]		400	600	
			Standby mode (between conversions)	[1, 2, 3]		15	35	
			Shutdown mode, serial bus inactive	[1, 2, 3]		3	8	
			Shutdown mode, serial bus active, f_S = 400 kHz			90		
			Shutdown mode, serial bus active, f_S = 2.17 MHz			350		
POR	Power-on reset threshold		Rising edge	[1, 2, 3]		1.2	1.55	V

(1) For subgroup definitions, please see 表 1.

6.6 Two-Wire Timing Requirements

At –55°C to 125°C and V+ = 1.7 V to 3.6 V, unless otherwise noted.

		FAST MODE		HIGH-SPEED MODE		UNIT
		MIN	MAX	MIN	MAX	
$f_{(SCL)}$	SCL operating frequency	0.001	0.4	0.001	2.17	MHz
$t_{(BUF)}$	Bus free time between stop and start condition	1300		160		ns
$t_{(HDSTA)}$	Hold time after repeated start condition. After this period, the first clock is generated.	600		160		ns
$t_{(SUSTA)}$	Repeated start condition setup time	600		160		ns
$t_{(SUSTO)}$	Stop condition setup time	600		160		ns
$t_{(HDDAT)}$	Data hold time	0	900	0	150	ns
$t_{(SUDAT)}$	Data setup time	100		40		ns
$t_{(LOW)}$	SCL clock low period	1300		320		ns
$t_{(HIGH)}$	SCL clock high period	600		60		ns
t_F – SDA	Data fall time		300		130	ns
t_F, t_R – SCL	Clock fall and rise time		300		40	ns
t_R	Rise time for SCL ≤ 100 kHz		1000			ns

表 1. Quality Conformance Inspection(1)

SUBGROUP	DESCRIPTION	TEMPERATURE (°C)
1	Static tests at	25
2	Static tests at	125
3	Static tests at	–55
4	Dynamic tests at	25
5	Dynamic tests at	125
6	Dynamic tests at	–55
7	Functional tests at	25
8A	Functional tests at	125
8B	Functional tests at	–55
9	Switching tests at	25
10	Switching tests at	125
11	Switching tests at	–55

(1) MIL-STD-883, Method 5005 - Group A

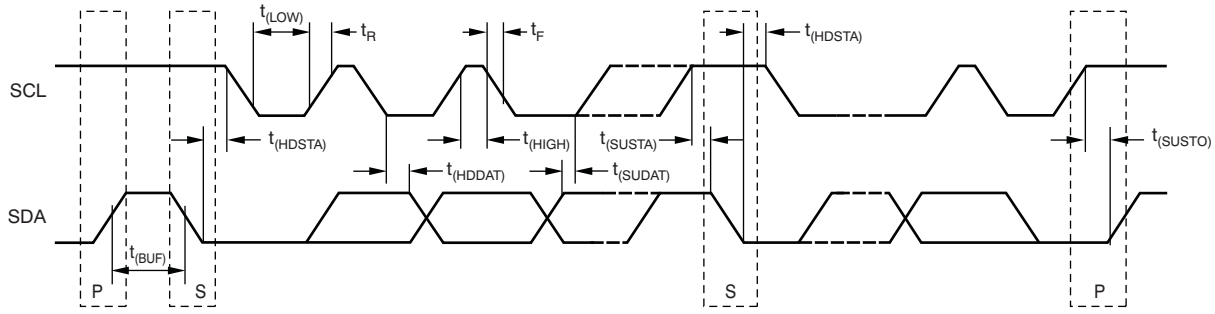

图 1. Two-Wire Timing Diagram

版权 © 2017–2020, Texas Instruments Incorporated

6.7 Typical Characteristics

At T_A = 25°C and V+ = 3.6 V, unless otherwise noted.

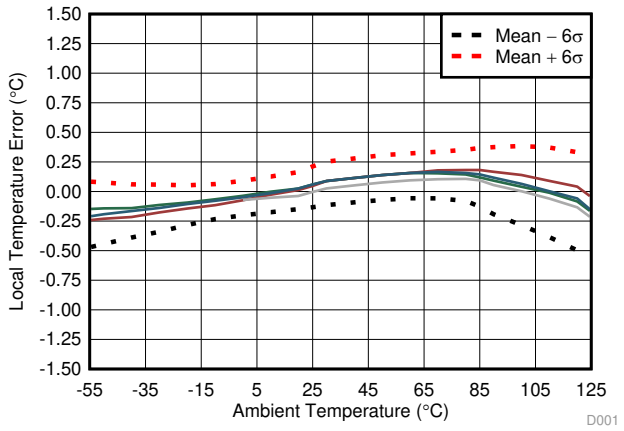

Typical behavior of 25 devices over temperature

图 2. Local Temperature Error vs Ambient Temperature

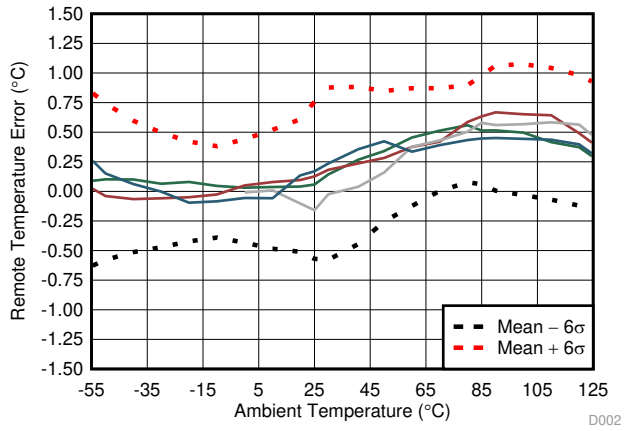

Typical behavior of 25 devices over temperature

图 3. Remote Temperature Error vs Ambient Temperature

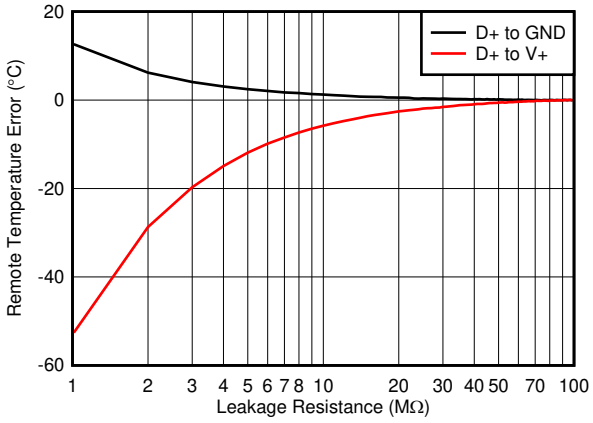

图 4. Remote Temperature Error vs Leakage Resistance

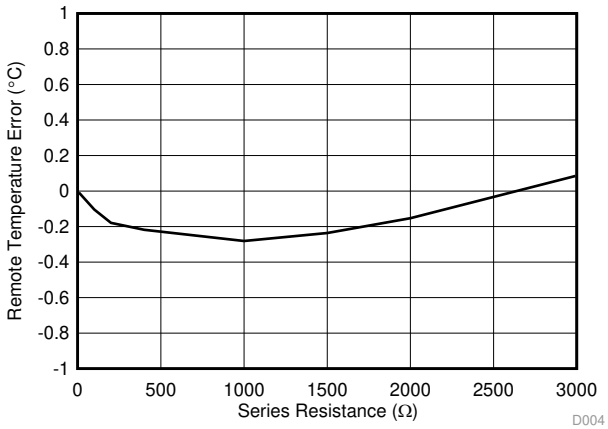

No physical capacitance during measurement

图 5. Remote Temperature Error vs Series Resistance

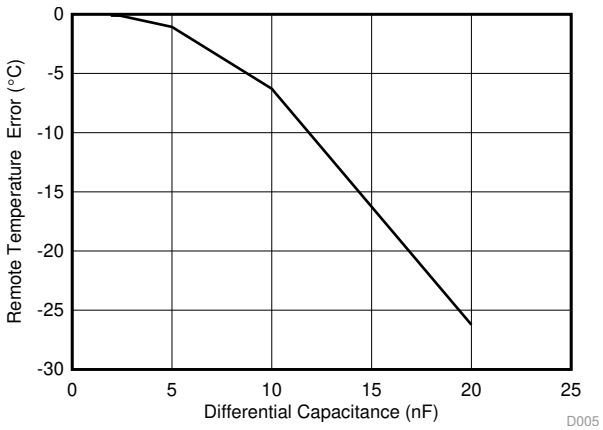

No physical series resistance on D+, D– pins during measurement

图 6. Remote Temperature Error vs Differential Capacitance

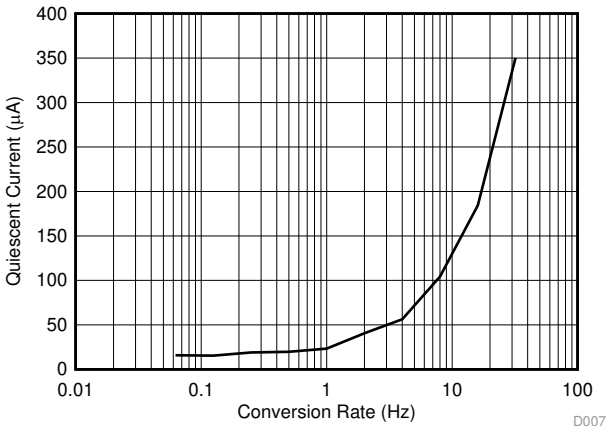

图 7. Quiescent Current vs Conversion Rate

Typical Characteristics (接下页)

At T_A = 25°C and V+ = 3.6 V, unless otherwise noted.

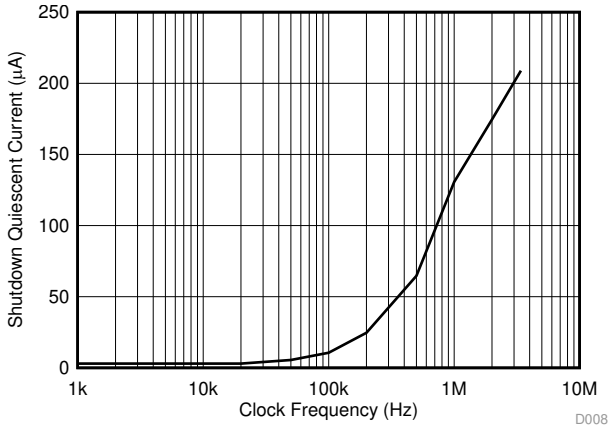

16 samples per second (default mode)

图 8. Shutdown Quiescent Current vs SCL Clock Frequency

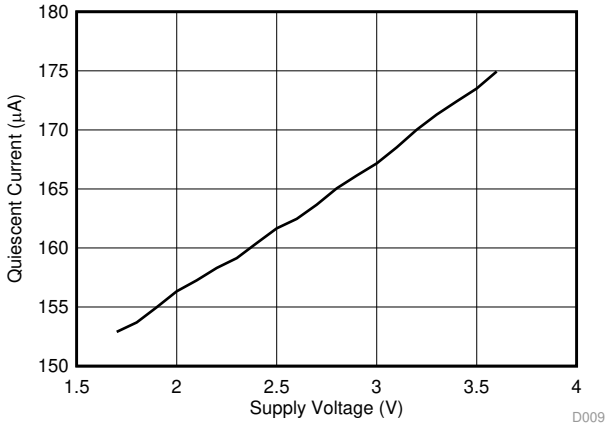

图 9. Quiescent Current vs Supply Voltage (At Default Conversion Rate of 16 Conversions per Second)

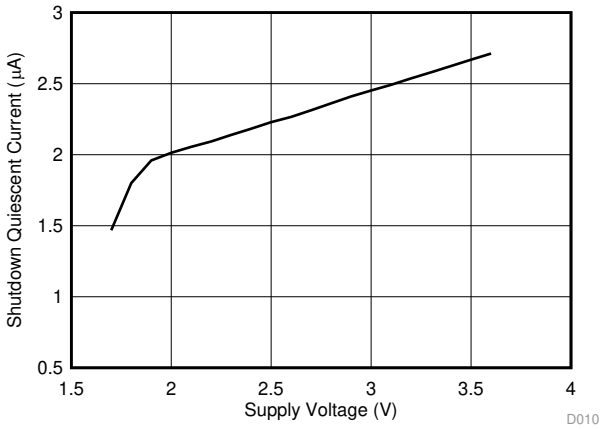

图 10. Shutdown Quiescent Current vs Supply Voltage

版权 © 2017–2020, Texas Instruments Incorporated

7 Detailed Description

7.1 Overview

The TMP461-SP device is a digital temperature sensor that combines a local temperature measurement channel and a remote-junction temperature measurement channel in a single CFP HKU-10 package. The device is two-wire- and SMBus-interface-compatible with nine pin-programmable bus address options, and is specified over a temperature range of –55°C to 125°C. The TMP461-SP device also contains multiple registers for programming and holding configuration settings, temperature limits, and temperature measurement results.

7.2 Functional Block Diagram

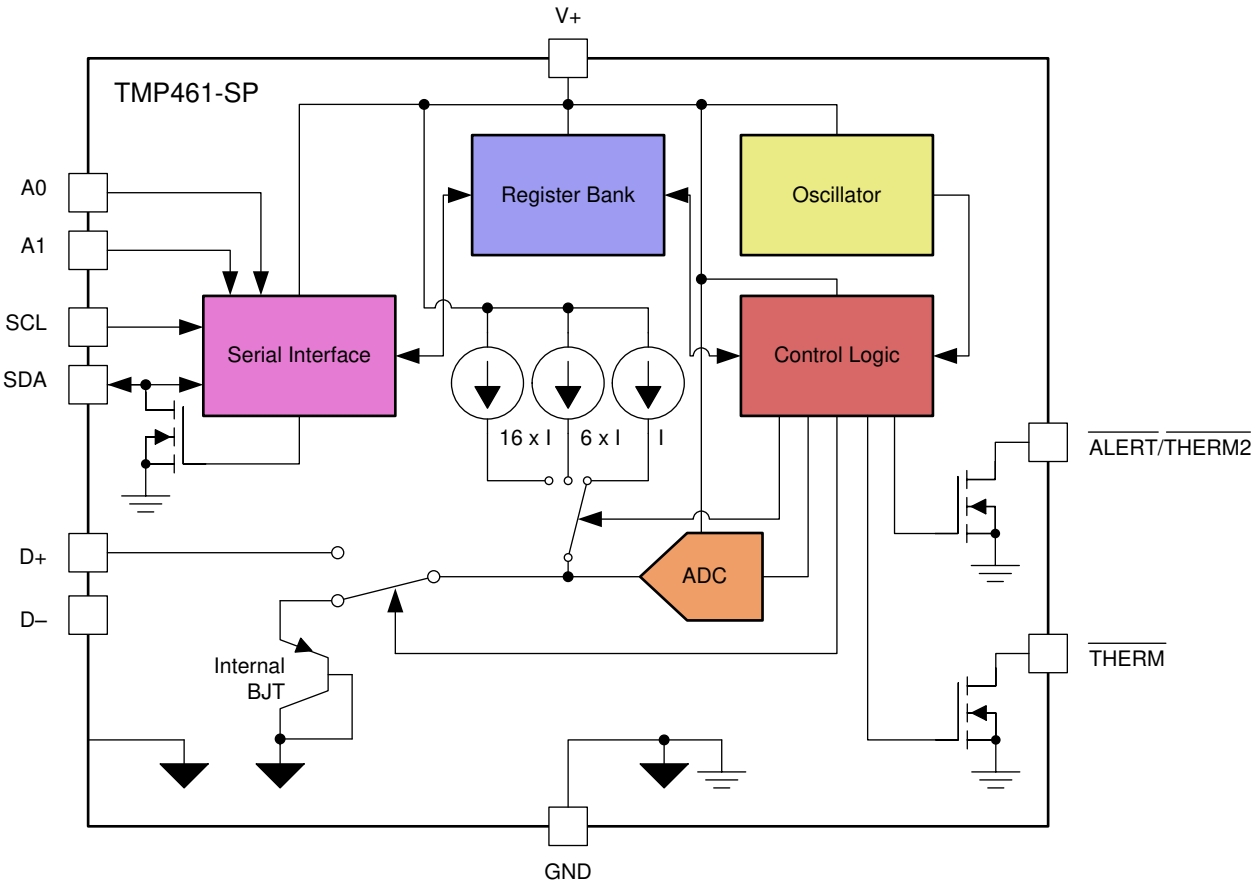

Copyright © 2017, Texas Instruments Incorporated

7.3 Feature Description

7.3.1 Temperature Measurement Data

The local and remote temperature sensors have a resolution of 12 bits (0.0625°C). Temperature data that result from conversions within the default measurement range are represented in binary form, as shown in the *Standard Binary* column of 表 2. Any temperatures above 127°C result in a value that rails to 127.9375 (7FFh). The device can be set to measure over an extended temperature range by changing bit 2 (RANGE) of the configuration register from low to high. The change in measurement range and data format from standard binary to extended binary occurs at the next temperature conversion. For data captured in the extended temperature range configuration, an offset of 64 (40h) is added to the standard binary value, as shown in the *Extended Binary* column of 表 2. This configuration allows measurement of temperatures as low as –64°C, and as high as 191°C; however, most temperature-sensing diodes only operate within the range of –55°C to 150°C. Additionally, the TMP461-SP is specified only for ambient temperatures ranging from –55°C to 125°C; parameters in the *Absolute Maximum Ratings* table must be observed.

表 2. Temperature Data Format (Local and Remote Temperature High Bytes)

TEMPERATURE (°C)	LOCAL AND REMOTE TEMPERATURE REGISTER HIGH BYTE VALUE (1°C Resolution)			
	STANDARD BINARY(1)		EXTENDED BINARY(2)	
	BINARY	HEX	BINARY	HEX
–64	1100 0000	C0	0000 0000	00
–50	1100 1110	CE	0000 1110	0E
–25	1110 0111	E7	0010 0111	27
0	0000 0000	00	0100 0000	40
1	0000 0001	01	0100 0001	41
5	0000 0101	05	0100 0101	45
10	0000 1010	0A	0100 1010	4A
25	0001 1001	19	0101 1001	59
50	0011 0010	32	0111 0010	72
75	0100 1011	4B	1000 1011	8B
100	0110 0100	64	1010 0100	A4
125	0111 1101	7D	1011 1101	BD
127	0111 1111	7F	1011 1111	BF
150	0111 1111	7F	1101 0110	D6
175	0111 1111	7F	1110 1111	EF
191	0111 1111	7F	1111 1111	FF

(1) Resolution is 1°C per count. Negative numbers are represented in twos complement format.
(2) Resolution is 1°C per count. All values are unsigned with a –64°C offset.

版权 © 2017–2020, Texas Instruments Incorporated

Both local and remote temperature data use two bytes for data storage. The high byte stores the temperature with 1°C resolution. The second or low byte stores the decimal fraction value of the temperature and allows a higher measurement resolution, as shown in 表 3. The measurement resolution for both the local and the remote channels is 0.0625°C.

表 3. Decimal Fraction Temperature Data Format (Local and Remote Temperature Low Bytes)

TEMPERATURE (°C)	TEMPERATURE REGISTER LOW BYTE VALUE (0.0625°C Resolution)(1)	
	STANDARD AND EXTENDED BINARY	HEX
0	0000 0000	00
0.0625	0001 0000	10
0.1250	0010 0000	20
0.1875	0011 0000	30
0.2500	0100 0000	40
0.3125	0101 0000	50
0.3750	0110 0000	60
0.4375	0111 0000	70
0.5000	1000 0000	80
0.5625	1001 0000	90
0.6250	1010 0000	A0
0.6875	1011 0000	B0
0.7500	1100 0000	C0
0.8125	1101 0000	D0
0.8750	1110 0000	E0
0.9375	1111 0000	F0

(1) Resolution is 0.0625°C per count. All possible values are shown.

7.3.1.1 Standard Binary to Decimal Temperature Data Calculation Example

High-byte conversion (for example, 0111 0011):

Convert the right-justified binary high byte to hexadecimal.

From hexadecimal, multiply the first number by $16^0 = 1$ and the second number by $16^1 = 16$.

The sum equals the decimal equivalent.

0111 0011b → 73h → $(3 \times 16^0) + (7 \times 16^1) = 115$.

Low-byte conversion (for example, 0111 0000):

To convert the left-justified binary low-byte to decimal, use bits 7 through 4 and ignore bits 3 through 0 because they do not affect the value of the number.

0111b → $(0 \times 1 / 2)^1 + (1 \times 1 / 2)^2 + (1 \times 1 / 2)^3 + (1 \times 1 / 2)^4 = 0.4375$.

7.3.1.2 Standard Decimal to Binary Temperature Data Calculation Example

For positive temperatures (for example, 20°C):

(20°C) / (1°C per count) = 20 → 14h → 0001 0100.

Convert the number to binary code with 8-bit, right-justified format, and MSB = 0 to denote a positive sign.

20°C is stored as 0001 0100 → 14h.

For negative temperatures (for example, –20°C):

(|–20|) / (1°C per count) = 20 → 14h → 0001 0100.

Generate the twos complement of a negative number by complementing the absolute value binary number and adding 1.

–20°C is stored as 1110 1100 → ECh.

7.3.2 Series Resistance Cancellation

Series resistance cancellation automatically eliminates the temperature error caused by the resistance of the routing to the remote transistor or by the resistors of the optional external low-pass filter. A total of up to 1 kΩ of series resistance can be cancelled by the TMP461-SP device, thus eliminating the need for additional characterization and temperature offset correction. See 图 5 (*Remote Temperature Error vs Series Resistance*) for details on the effects of series resistance on sensed remote temperature error.

7.3.3 Differential Input Capacitance

The TMP461-SP device tolerates differential input capacitance of up to 1000 pF with minimal change in temperature error. The effect of capacitance on the sensed remote temperature error is illustrated in 图 6 (*Remote Temperature Error vs Differential Capacitance*).

7.3.4 Filtering

Remote junction temperature sensors are usually implemented in a noisy environment. Noise is most often created by fast digital signals that can corrupt measurements. The TMP461-SP device has a built-in, 65-kHz filter on the D+ and D– inputs to minimize the effects of noise. However, a bypass capacitor placed differentially across the inputs of the remote temperature sensor is recommended to make the application more robust against unwanted coupled signals. For this capacitor, select a value between 100 pF differential and 1 nF. Some applications attain better overall accuracy with additional series resistance. However, this increased accuracy is application-specific. When series resistance is added, the total value must not be greater than 1 kΩ. If filtering is required, suggested component values are 100 pF differential and 50 Ω on each input; exact values are application-specific.

Additionally, a digital filter is available for the remote temperature measurements to further reduce the effect of noise. This filter is programmable and has two levels when enabled. Level 1 performs a moving average of four consecutive samples. Level 1 filtering can be achieved by setting the digital filter control register (read address 24h, write address 24h) to 01h. Level 2 performs a moving average of eight consecutive samples. Level 2 filtering can be achieved by setting the digital filter control register (read address 24h, write address 24h) to 02h. The value stored in the remote temperature result register is the output of the digital filter, and is the value that the $\overline{\text{ALERT}}$ and $\overline{\text{THERM}}$ limits are compared to. The digital filter provides additional immunity to noise and spikes on the $\overline{\text{ALERT}}$ and $\overline{\text{THERM}}$ outputs. The filter responses to impulse and step inputs are shown in 图 11 and 图 12, respectively. The filter can be enabled or disabled by programming the desired levels in the digital filter register; see 表 5. The digital filter is disabled by default and on POR.

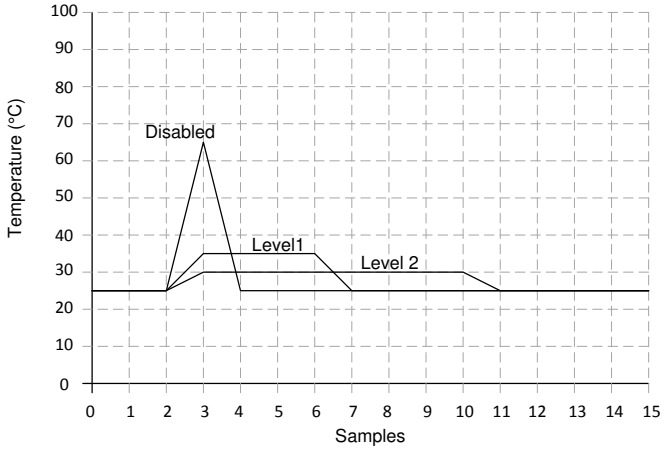

图 11. Filter Response to Impulse Inputs

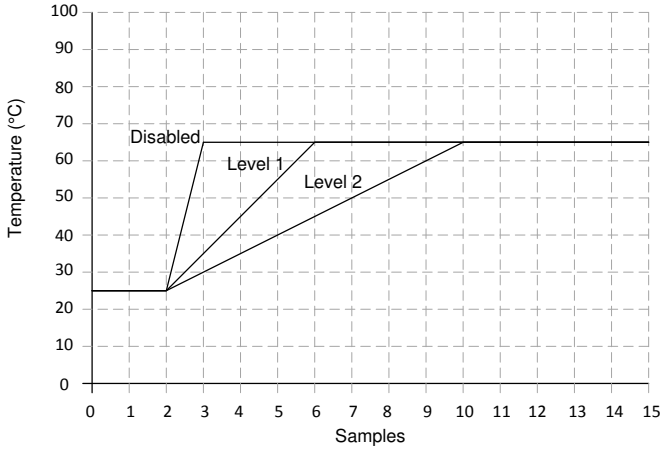

图 12. Filter Response to Step Inputs

版权 © 2017–2020, Texas Instruments Incorporated

7.3.5 Sensor Fault

The TMP461-SP device can sense a fault at the D+ input resulting from an incorrect diode connection. The TMP461-SP device can also sense an open circuit. Short-circuit conditions return a value of –64°C. The detection circuitry consists of a voltage comparator that trips when the voltage at D+ exceeds (V+) – 0.3 V (typical). The comparator output is continuously checked during a conversion. If a fault is detected, then OPEN (bit 2) in the status register is set to 1.

When not using the remote sensor with the TMP461-SP device, D+ must be connected to D– or GND to prevent meaningless fault warnings.

7.3.6 $\overline{\text{ALERT}}$ and $\overline{\text{THERM}}$ Functions

Operation of the $\overline{\text{ALERT}}$ (pin 7) and $\overline{\text{THERM}}$ (pin 4) interrupts is shown in 图 13. Operation of the $\overline{\text{THERM}}$ (pin 4) and $\overline{\text{THERM2}}$ (pin 7) interrupts is shown in 图 14. The $\overline{\text{ALERT}}$ and $\overline{\text{THERM}}$ pin setting is determined by bit 5 of the configuration register.

The hysteresis value is stored in the $\overline{\text{THERM}}$ hysteresis register and applies to both the $\overline{\text{THERM}}$ and $\overline{\text{THERM2}}$ interrupts. The value of the CONAL[2:0] bits in the consecutive $\overline{\text{ALERT}}$ register (see 表 5) determines the number of limit violations before the $\overline{\text{ALERT}}$ pin is tripped. The default value is 000b and corresponds to one violation, 001b programs two consecutive violations, 011b programs three consecutive violations, and 111b programs four consecutive violations. The CONAL[2:0] bits provide additional filtering for the $\overline{\text{ALERT}}$ pin state.

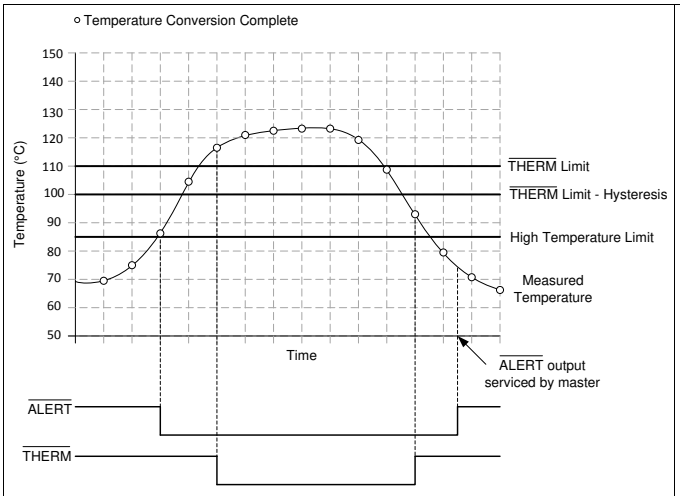

图 13. $\overline{\text{ALERT}}$ and $\overline{\text{THERM}}$ Interrupt Operation

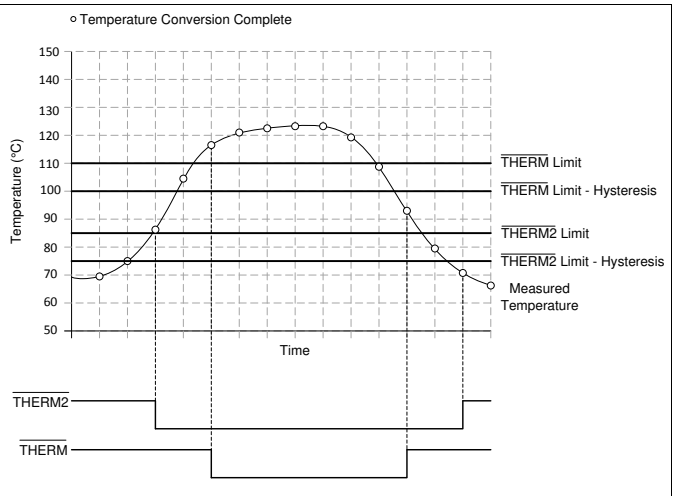

图 14. $\overline{\text{THERM}}$ and $\overline{\text{THERM2}}$ Interrupt Operation

7.4 Device Functional Modes

7.4.1 Shutdown Mode (SD)

The TMP461-SP shutdown mode enables the user to save maximum power by shutting down all device circuitry other than the serial interface, and reducing current consumption to typically less than 3 μA; see 图 10 (*Shutdown Quiescent Current vs Supply Voltage*). Shutdown mode is enabled when the SD bit (bit 6) of the configuration register is high; the device shuts down after the current conversion is finished. When the SD bit is low, the device maintains a continuous-conversion state.

7.5 Programming

7.5.1 Serial Interface

The TMP461-SP device operates only as a slave device on either the two-wire bus or the SMBus. Connections to either bus are made using the open-drain I/O lines, SDA and SCL. The SDA and SCL pins feature integrated spike suppression filters and Schmitt triggers to minimize the effects of input spikes and bus noise. The TMP461-SP device supports the transmission protocol for fast (1 kHz to 400 kHz) and high-speed (1 kHz to 2.17 MHz) modes. All data bytes are transmitted MSB first.

7.5.1.1 Bus Overview

The TMP461-SP device is SMBus-interface-compatible. In SMBus protocol, the device that initiates the transfer is called a *master*, and the devices controlled by the master are *slaves*. The bus must be controlled by a master device that generates the serial clock (SCL), controls the bus access, and generates the start and stop conditions.

To address a specific device, a start condition is initiated. A start condition is indicated by pulling the data line (SDA) from a high-to-low logic level when SCL is high. All slaves on the bus shift in the slave address byte, with the last bit indicating whether a read or write operation is intended. During the ninth clock pulse, the slave being addressed responds to the master by generating an *acknowledge* bit and pulling SDA low.

Data transfer is then initiated and sent over eight clock pulses followed by an acknowledge bit. During data transfer, SDA must remain stable when SCL is high. A change in SDA when SCL is high is interpreted as a control signal.

After all data are transferred, the master generates a stop condition. A stop condition is indicated by pulling SDA from low to high when SCL is high.

7.5.1.2 Bus Definitions

The TMP461-SP device is two-wire- and SMBus-compatible. 图 15 and 图 16 illustrate the timing for various operations on the TMP461-SP device. The bus definitions are as follows:

Bus Idle: Both SDA and SCL lines remain high.

Start Data Transfer: A change in the state of the SDA line (from high to low) when the SCL line is high defines a start condition. Each data transfer initiates with a start condition.

Stop Data Transfer: A change in the state of the SDA line (from low to high) when the SCL line is high defines a stop condition. Each data transfer terminates with a repeated start or stop condition.

Data Transfer: The number of data bytes transferred between a start and stop condition is not limited and is determined by the master device. The receiver acknowledges the data transfer.

Acknowledge: Each receiving device, when addressed, is obliged to generate an acknowledge bit. A device that acknowledges must pull down the SDA line during the acknowledge clock pulse in such a way that the SDA line is stable low during the high period of the acknowledge clock pulse. Take setup and hold times into account. On a master receive, data transfer termination can be signaled by the master generating a not-acknowledge on the last byte that is transmitted by the slave.

版权 © 2017–2020, Texas Instruments Incorporated

Programming (接下页)

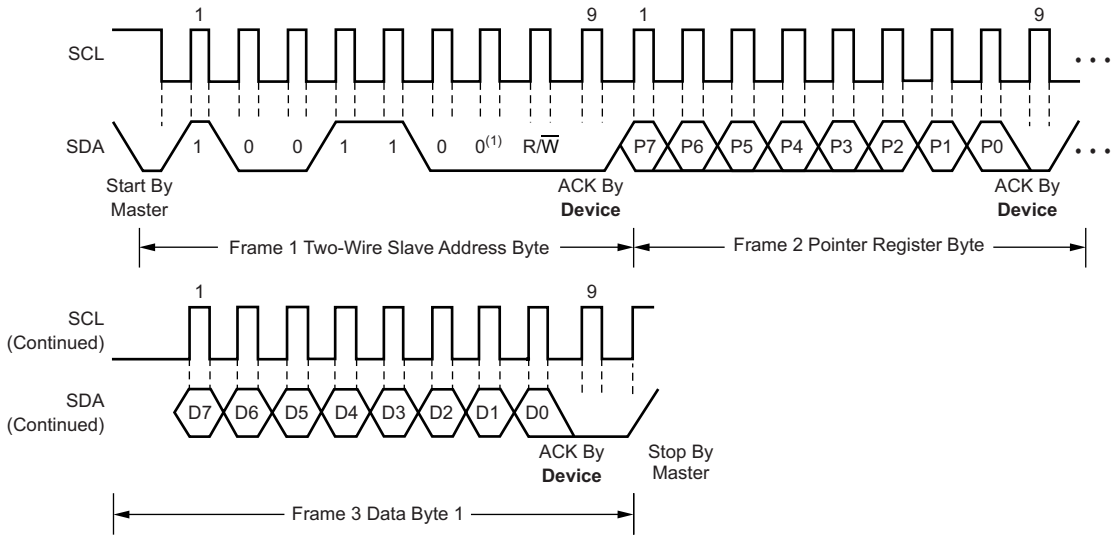

(1) Slave address 1001100 is shown.

图 15. Two-Wire Timing Diagram for Write Word Format

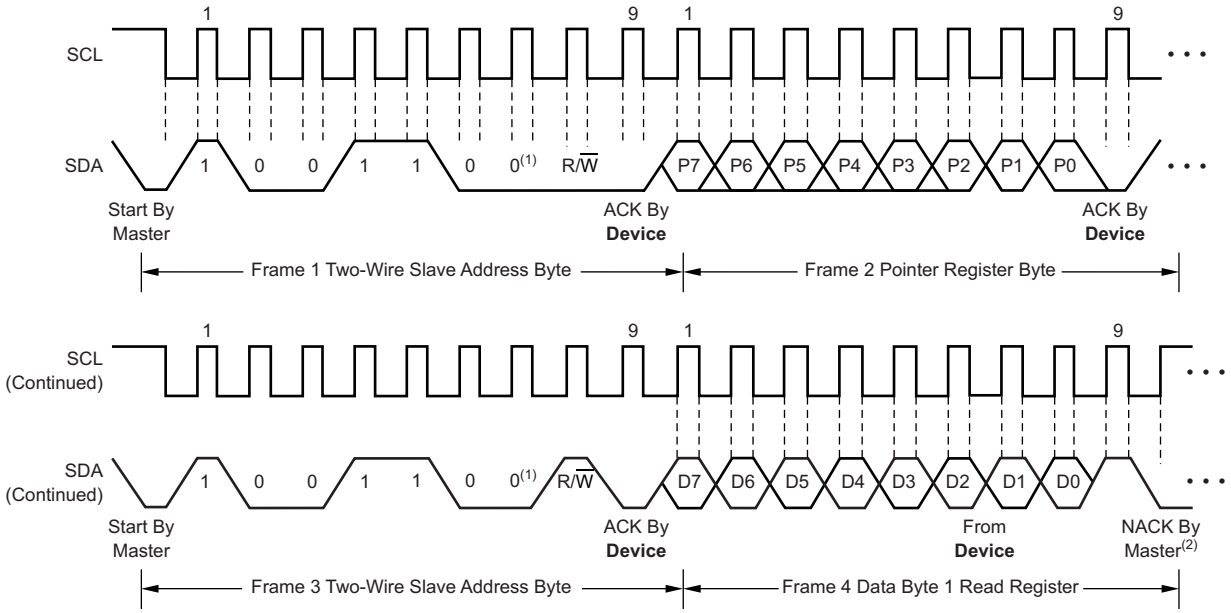

(1) Slave address 1001100 is shown.

(2) The master must leave SDA high to terminate a single-byte read operation.

图 16. Two-Wire Timing Diagram for Single-Byte Read Format

7.5.1.3 Serial Bus Address

To communicate with the TMP461-SP device, the master must first address slave devices using a slave address byte. The slave address byte consists of seven address bits and a direction bit indicating the intent of executing a read or write operation. The TMP461-SP allows up to nine devices to be connected to the SMBus, depending on the A0, A1 pin connections as described in 表 4. The A0 and A1 address pins must be isolated from noisy or high-frequency signals traces in order to avoid false address settings when these pins are set to a float state.

Programming (接下页)

表 4. TMP461-SP Slave Address Options

A1 CONNECTION	A0 CONNECTION	SLAVE ADDRESS	
		BINARY	HEX
GND	GND	1001 000	48
GND	Float	1001 001	49
GND	V+	1001 010	4A
Float	GND	1001 011	4B
Float	Float	1001 100	4C
Float	V+	1001 101	4D
V+	GND	1001 110	4E
V+	Float	1001 111	4F
V+	V+	1010 000	50

7.5.1.4 Read and Write Operations

Accessing a particular register on the TMP461-SP device is accomplished by writing the appropriate value to the pointer register. The value for the pointer register is the first byte transferred after the slave address byte with the R/$\overline{W}$ bit low. Every write operation to the TMP461-SP device requires a value for the pointer register (see 图 15).

When reading from the TMP461-SP device, the last value stored in the pointer register by a write operation is used to determine which register is read by a read operation. To change which register is read for a read operation, a new value must be written to the pointer register. This transaction is accomplished by issuing a slave address byte with the R/$\overline{W}$ bit low, followed by the pointer register byte; no additional data are required. The master can then generate a start condition and send the slave address byte with the R/$\overline{W}$ bit high to initiate the read command; see 图 16 for details of this sequence.

If repeated reads from the same register are desired, continually sending the pointer register bytes is not necessary because the TMP461-SP retains the pointer register value until it is changed by the next write operation. The register bytes are sent MSB first, followed by the LSB. However, to mitigate effects of single-event upsets and single-event functional interrupts, it is recommended that appropriate value be written to the pointer register each time a read operation is performed. Relying on the last value stored in the pointer register may increase the probability of a failed read due to a single event upset.

Terminate read operations by issuing a *not-acknowledge* command at the end of the last byte to be read. For a single-byte operation, the master must leave the SDA line high during the acknowledge time of the first byte that is read from the slave.

7.5.1.5 Timeout Function

The TMP461-SP device resets the serial interface if either SCL or SDA are held low for 25 ms (typical) between a start and stop condition. If the TMP461-SP device is holding the bus low, the device releases the bus and waits for a start condition. To avoid activating the timeout function, maintaining a communication speed of at least 1 kHz for the SCL operating frequency is necessary.

7.5.1.6 High-Speed Mode

For the two-wire bus to operate at frequencies above 1 MHz, the master device must issue a high-speed mode (HS-mode) master code (0000 1xxx) as the first byte after a start condition to switch the bus to high-speed operation. The TMP461-SP device does not acknowledge this byte, but switches the input filters on SDA and SCL and the output filter on SDA to operate in HS-mode, thus allowing transfers at up to 2.17 MHz. After the HS-mode master code is issued, the master transmits a two-wire slave address to initiate a data transfer operation. The bus continues to operate in HS-mode until a stop condition occurs on the bus. Upon receiving the stop condition, the TMP461-SP device switches the input and output filters back to fast mode operation.

版权 © 2017–2020, Texas Instruments Incorporated

7.5.2 General-Call Reset

The TMP461-SP device supports reset using the two-wire general-call address 00h (0000 0000b). The TMP461-SP device acknowledges the general-call address and responds to the second byte. If the second byte is 06h (0000 0110b), the TMP461-SP device executes a software reset. This software reset restores the power-on reset state to all TMP461-SP registers and aborts any conversion in progress. The TMP461-SP device takes no action in response to other values in the second byte.

7.6 Register Map

表 5. Register Map

POINTER READ (HEX)	POINTER WRITE (HEX)	POR (HEX)	BIT DESCRIPTION								REGISTER DESCRIPTION
			7	6	5	4	3	2	1	0	
00	N/A	00	LT11	LT10	LT9	LT8	LT7	LT6	LT5	LT4	Local Temperature Register (high byte)
01	N/A	00	RT11	RT10	RT9	RT8	RT7	RT6	RT5	RT4	Remote Temperature Register (high byte)
02	N/A	N/A	BUSY	LHIGH	LLOW	RHIGH	RLOW	OPEN	RTHRM	LTHRM	Status Register
03	09	00	MASK1	SD	$\overline{\text{ALERT}}$/$\overline{\text{THERM2}}$	0	0	RANGE	0	0	Configuration Register
04	0A	08	0	0	0	0	CR3	CR2	CR1	CR0	Conversion Rate Register
05	0B	7F	LTHL11	LTHL10	LTHL9	LTHL8	LTHL7	LTHL6	LTHL5	LTHL4	Local Temperature High Limit Register
06	0C	80	LTLL11	LTLL10	LTLL9	LTLL8	LTLL7	LTLL6	LTLL5	LTLL4	Local Temperature Low Limit Register
07	0D	7F	RTHL11	RTHL10	RTHL9	RTHL8	RTHL7	RTHL6	RTHL5	RTHL4	Remote Temperature High Limit Register (high byte)
08	0E	80	RTLL11	RTLL10	RTLL9	RTLL8	RTLL7	RTLL6	RTLL5	RTLL4	Remote Temperature Low Limit Register (high byte)
N/A	0F	N/A	X	X	X	X	X	X	X	X	One-Shot Start Register(1)
10	N/A	00	RT3	RT2	RT1	RT0	0	0	0	0	Remote Temperature Register (low byte)
11	11	00	RTOS11	RTOS10	RTOS9	RTOS8	RTOS7	RTOS6	RTOS5	RTOS4	Remote Temperature Offset Register (high byte)
12	12	00	RTOS3	RTOS2	RTOS1	RTOS0	0	0	0	0	Remote Temperature Offset Register (low byte)
13	13	F0	RTHL3	RTHL2	RTHL1	RTHL0	0	0	0	0	Remote Temperature High Limit Register (low byte)
14	14	00	RTLL3	RTLL2	RTLL1	RTLL0	0	0	0	0	Remote Temperature Low Limit Register (low byte)
15	N/A	00	LT3	LT2	LT1	LT0	0	0	0	0	Local Temperature Register (low byte)
16	16	03	0	0	0	0	0	0	REN	LEN	Channel Enable Register
19	19	7F	RTH11	RTH10	RTH9	RTH8	RTH7	RTH6	RTH5	RTH4	Remote Temperature $\overline{\text{THERM}}$ Limit Register
20	20	7F	LTH11	LTH10	LTH9	LTH8	LTH7	LTH6	LTH5	LTH4	Local Temperature $\overline{\text{THERM}}$ Limit Register
21	21	0A	HYS11	HYS10	HYS9	HYS8	HYS7	HYS6	HYS5	HYS4	$\overline{\text{THERM}}$ Hysteresis Register
22	22	01	0	0	0	0	CONAL2	CONAL1	CONAL0	1	Consecutive $\overline{\text{ALERT}}$ Register
23	23	00	NC7	NC6	NC5	NC4	NC3	NC2	NC1	NC0	η-Factor Correction Register
24	24	00	0	0	0	0	0	0	DF1	DF0	Digital Filter Control Register
FE	N/A	55	0	1	0	1	0	1	0	1	Manufacturer Identification Register

(1) X = undefined. Writing any value to this register initiates a one-shot start; see the *One-Shot Conversion* section.

版权 © 2017–2020, Texas Instruments Incorporated

7.6.1 Register Information

The TMP461-SP device contains multiple registers for holding configuration information, temperature measurement results, and status information. These registers are described in 图 17 and 表 5.

7.6.1.1 Pointer Register

图 17 shows the internal register structure of the TMP461-SP device. The 8-bit pointer register is used to address a given data register. The pointer register identifies which of the data registers must respond to a read or write command on the two-wire bus. This register is set with every write command. A write command must be issued to set the proper value in the pointer register before executing a read command. 表 5 describes the pointer register and the internal structure of the TMP461-SP registers. The power-on reset (POR) value of the pointer register is 00h (0000 0000b).

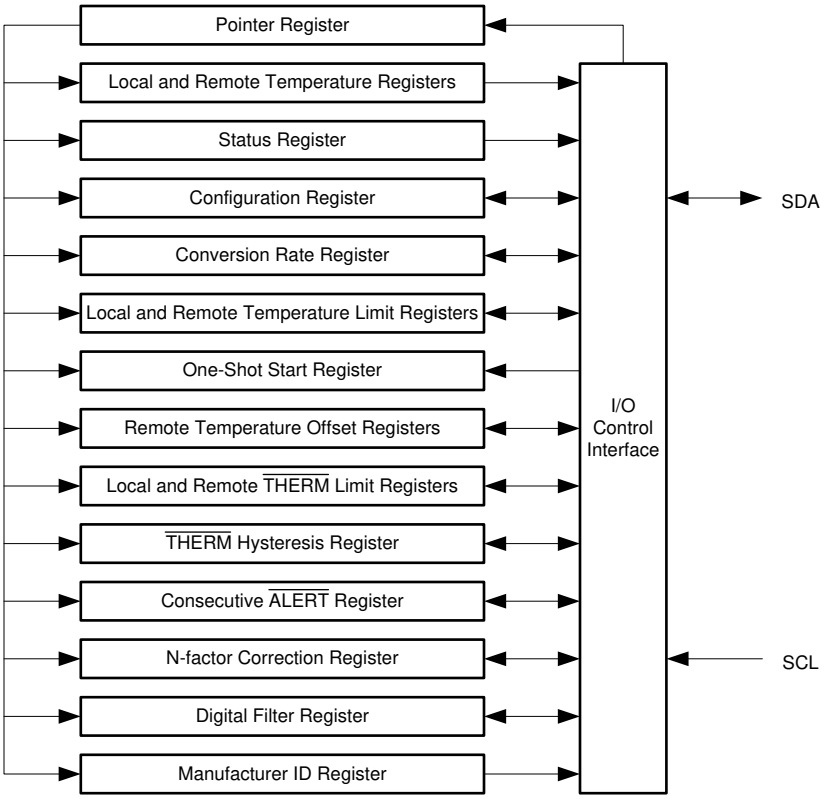

图 17. Internal Register Structure

7.6.1.2 Local and Remote Temperature Registers

The TMP461-SP device has multiple 8-bit registers that hold temperature measurement results. The eight most significant bits (MSBs) of the local temperature sensor result are stored in register 00h, and the four least significant bits (LSBs) are stored in register 15h (the four MSBs of register 15h). The eight MSBs of the remote temperature sensor result are stored in register 01h, and the four LSBs are stored in register 10h (the four MSBs of register 10h). The four LSBs of both the local and remote sensor indicate the temperature value after the decimal point (for example, if the temperature result is 10.0625°C, then the high byte is 0000 1010 and the low byte is 0001 0000). These registers are read-only and are updated by the ADC each time a temperature measurement is completed.

When the full temperature value is needed, reading the MSB value first causes the LSB value to be locked (the ADC does not write to it) until the LSB value is read. The same thing happens upon reading the LSB value first (the MSB value is locked until it is read). This mechanism assures that both bytes of the read operation are from the same ADC conversion. This assurance remains valid only until another register is read. For proper operation, read the high byte of the temperature result first. Read the low byte register in the next read command; if the LSBs are not needed, the register can be left unread. The power-on reset value of all temperature registers is 00h.

版权 © 2017–2020, Texas Instruments Incorporated

7.6.1.3 Status Register

The status register reports the state of the temperature ADC, the temperature limit comparators, and the connection to the remote sensor. 表 6 lists the status register bits. The status register is read-only and is read by accessing pointer address 02h.

表 6. Status Register Format

STATUS REGISTER (Read = 02h, Write = N/A)		
BIT NUMBER	**BIT NAME**	**FUNCTION**
7	BUSY	= 1 when the ADC is converting
6	LHIGH(1)	= 1 when the local high temperature limit is tripped
5	LLOW(1)	= 1 when the local low temperature limit is tripped
4	RHIGH(1)	= 1 when the remote high temperature limit is tripped
3	RLOW(1)	= 1 when the remote low temperature limit is tripped
2	OPEN(1)	= 1 when the remote sensor is an open circuit
1	RTHRM	= 1 when the remote $\overline{\text{THERM}}$ limit is tripped
0	LTHRM	= 1 when the local $\overline{\text{THERM}}$ limit is tripped

(1) These flags stay high until the status register is read or are reset by a POR when pin 7 is configured as $\overline{\text{ALERT}}$. Only bit 2 (OPEN) stays high until the status register is read or is reset by a POR when pin 7 is configured as $\overline{\text{THERM2}}$.

The BUSY bit = 1 if the ADC is making a conversion. This bit is set to 0 if the ADC is not converting.

The LHIGH and LLOW bits indicate a local sensor overtemperature or undertemperature event, respectively. The RHIGH and RLOW bits indicate a remote sensor overtemperature or undertemperature event, respectively. The HIGH bit is set when the temperature exceeds the high limit in alert mode and therm mode and the low bit is set when the temperature goes below the low limit in alert mode. The OPEN bit indicates an open-circuit condition on the remote sensor. When pin 7 is configured as the $\overline{\text{ALERT}}$ output, the five flags are NORed together. If any of the five flags are high, the $\overline{\text{ALERT}}$ interrupt latch is set and the $\overline{\text{ALERT}}$ output goes low. Reading the status register clears the five flags, provided that the condition that caused the setting of the flags is not present anymore (that is, the value of the corresponding result register is within the limits, or the remote sensor is connected properly and functional). The $\overline{\text{ALERT}}$ interrupt latch (and the $\overline{\text{ALERT}}$ pin correspondingly) is not reset by reading the status register. The reset is done by the master reading the temperature sensor device address to service the interrupt, and only if the flags are reset and the condition that caused them to be set is no longer present.

The RTHRM and LTHRM flags are set when the corresponding temperature exceeds the programmed $\overline{\text{THERM}}$ limit. These flags are reset automatically when the temperature returns to within the limits. The $\overline{\text{THERM}}$ output goes low in the case of overtemperature on either the local or remote channel, and goes high as soon as the measurements are within the limits again. The $\overline{\text{THERM}}$ hysteresis register (21h) allows hysteresis to be added so that the flag resets and the output goes high when the temperature returns to or goes below the limit value minus the hysteresis value.

When pin 7 is configured as $\overline{\text{THERM2}}$, only the high limits matter. The LHIGH and RHIGH flags are set if the respective temperatures exceed the limit values, and the pin goes low to indicate the event. The LLOW and RLOW flags have no effect on $\overline{\text{THERM2}}$ and the output behaves the same way when configured as $\overline{\text{THERM}}$.

版权 © 2017–2020, Texas Instruments Incorporated

7.6.1.4 Configuration Register

The configuration register sets the temperature range, the $\overline{\text{ALERT}}$/$\overline{\text{THERM}}$ modes, and controls the shutdown mode. The configuration register is set by writing to pointer address 09h, and is read by reading from pointer address 03h. 表 7 summarizes the bits of the configuration register.

表 7. Configuration Register Bit Descriptions

CONFIGURATION REGISTER (Read = 03h, Write = 09h, POR = 00h)			
BIT NUMBER	**NAME**	**FUNCTION**	**POWER-ON RESET VALUE**
7	MASK1	0 = $\overline{\text{ALERT}}$ enabled 1 = $\overline{\text{ALERT}}$ masked	0
6	SD	0 = Run 1 = Shut down	0
5	$\overline{\text{ALERT}}$/$\overline{\text{THERM2}}$	0 = $\overline{\text{ALERT}}$ 1 = $\overline{\text{THERM2}}$	0
4:3	Reserved	—	0
2	RANGE	0 = –40°C to +127°C 1 = –64°C to +191°C	0
1:0	Reserved	—	0

MASK1 (bit 7) of the configuration register masks the $\overline{\text{ALERT}}$ output. If MASK1 is 0 (default), the $\overline{\text{ALERT}}$ output is enabled. If MASK1 is set to 1, the $\overline{\text{ALERT}}$ output is disabled. This configuration applies only if the value of $\overline{\text{ALERT}}$/$\overline{\text{THERM2}}$ (bit 5) is 0 (that is, pin 7 is configured as the $\overline{\text{ALERT}}$ output). If pin 7 is configured as the $\overline{\text{THERM2}}$ output, the value of the MASK1 bit has no effect.

The shutdown bit (SD, bit 6) enables or disables the temperature-measurement circuitry. If SD = 0 (default), the TMP461-SP device converts continuously at the rate set in the conversion rate register. When SD is set to 1, the TMP461-SP device stops converting when the current conversion sequence is complete and enters a shutdown mode. When SD is set to 0 again, the TMP461-SP resumes continuous conversions. When SD = 1, a single conversion can be started by writing to the one-shot start register; see the *One-Shot Start Register* section for more information.

$\overline{\text{ALERT}}$/$\overline{\text{THERM2}}$ (bit 5) sets the configuration of pin 7. If the $\overline{\text{ALERT}}$/$\overline{\text{THERM2}}$ bit is 0 (default), then pin 7 is configured as the $\overline{\text{ALERT}}$ output; if this bit is set to 1, then pin 7 is configured as the $\overline{\text{THERM2}}$ output.

The temperature range is set by configuring RANGE (bit 2) of the configuration register. Setting this bit low (default) configures the TMP461-SP device for the standard measurement range (–40°C to +127°C); temperature conversions are stored in the standard binary format. Setting bit 2 high configures the TMP461-SP device for the extended measurement range (–64°C to +191°C); temperature conversions are stored in the extended binary format (see 表 2).

The remaining bits of the configuration register are reserved and must always be set to 0. The power-on reset value for this register is 00h.

版权 © 2017–2020, Texas Instruments Incorporated

7.6.1.5 Conversion Rate Register

The conversion rate register (read address 04h, write address 0Ah) controls the rate at which temperature conversions are performed. This register adjusts the idle time between conversions but not the conversion time itself, thereby allowing the TMP461-SP power dissipation to be balanced with the temperature register update rate. 表 8 lists the conversion rate options and corresponding time between conversions. The default value of the register is 08h, which gives a default rate of 16 conversions per second.

表 8. Conversion Rate

VALUE	CONVERSIONS PER SECOND	TIME (Seconds)
00h	0.0625	16
01h	0.125	8
02h	0.25	4
03h	0.5	2
04h	1	1
05h	2	0.5
06h	4	0.25
07h	8	0.125
08h	16 (default)	0.0625 (default)
09h	32	0.03125

7.6.1.6 One-Shot Start Register

When the TMP461-SP device is in shutdown mode (SD = 1 in the configuration register), a single conversion is started by writing any value to the one-shot start register, pointer address 0Fh. This write operation starts one conversion and comparison cycle on either both the local and remote sensors or on only one or the other sensor, depending on the LEN and REN values configured in the channel enable register (read address 16h, write address 16h). The TMP461-SP device returns to shutdown mode when the cycle completes. The value of the data sent in the write command is irrelevant and is not stored by the TMP461-SP device.

7.6.1.7 Channel Enable Register

The channel enable register (read address 16h, write address 16h) enables or disables the temperature conversion of remote and local temperature sensors. LEN (bit 0) of the channel enable register enables/disables the conversion of local temperature. REN (bit 1) of the channel enable register enables/disables the conversion of remote temperature. Both LEN and REN are set to 1 (default), this enables the ADC to convert both local and remote temperatures. If LEN is set to 0, the local temperature conversion is disabled and similarly if REN is set to 0, the remote temperature conversion is disabled.

Both local and remote temperatures are converted by the internal ADC as a default mode. Channel Enable register can be configured to achieve power savings by reducing the total ADC conversion time to half for applications that do not require both remote and local temperature information.

7.6.1.8 Consecutive $\overline{\text{ALERT}}$ Register

The Consecutive $\overline{\text{ALERT}}$ register (read address 22h, write address 22h) controls the number of out-of-limit temperature measurements required for $\overline{\text{ALERT}}$ to be asserted. 表 9 summarizes the values of the consecutive $\overline{\text{ALERT}}$ register. The number programmed in the consecutive $\overline{\text{ALERT}}$ applies to both the remote and local temperature results. When the number of times that the temperature result consecutively exceeds the high limit register value is equal to the value programmed in the consecutive $\overline{\text{ALERT}}$ register, $\overline{\text{ALERT}}$ is asserted. Similarly, the consecutive $\overline{\text{ALERT}}$ register setting is also applicable to the low-limit register.

表 9. Consecutive $\overline{\text{ALERT}}$

REGISTER VALUE	NUMBER OF OUT-OF-LIMIT MEASUREMENTS REQUIRED TO ASSERT $\overline{\text{ALERT}}$
01h	1 (default)
03h	2
07h	3
0Fh	4

版权 © 2017–2020, Texas Instruments Incorporated

7.6.1.9 η-Factor Correction Register

The TMP461-SP device allows for a different η-factor value to be used for converting remote channel measurements to temperature. The remote channel uses sequential current excitation to extract a differential V_{BE} voltage measurement to determine the temperature of the remote transistor. 公式 1 shows this voltage and temperature.

$$V_{BE2} - V_{BE1} = \frac{\eta kT}{q} \ln\left(\frac{I_2}{I_1}\right) \quad (1)$$

The value η in 公式 1 is a characteristic of the particular transistor used for the remote channel. The power-on reset value for the TMP461-SP device is η = 1.008. The value in the η-factor correction register can be used to adjust the effective η-factor according to 公式 2 and 公式 3.

$$\eta_{eff} = \left(\frac{1.008 \times 2088}{2088 + N_{ADJUST}}\right) \quad (2)$$

$$N_{ADJUST} = \left(\frac{1.008 \times 2088}{\eta_{eff}}\right) - 2088 \quad (3)$$

The η-factor correction value must be stored in twos complement format, yielding an effective data range from –128 to 127. The η-factor correction value is written to and read from pointer address 23h. The register power-on reset value is 00h, thus having no effect unless a different value is written to it. The resolution of the η-factor register is 0.000483.

表 10. η-Factor Range

N_{ADJUST}			η
BINARY	HEX	DECIMAL	
0111 1111	7F	127	0.950205
0000 1010	0A	10	1.003195
0000 1000	08	8	1.004153
0000 0110	06	6	1.005112
0000 0100	04	4	1.006073
0000 0010	02	2	1.007035
0000 0001	01	1	1.007517
0000 0000	00	0	1.008
1111 1111	FF	–1	1.008483
1111 1110	FE	–2	1.008966
1111 1100	FC	–4	1.009935
1111 1010	FA	–6	1.010905
1111 1000	F8	–8	1.011877
1111 0110	F6	–10	1.012851
1000 0000	80	–128	1.073829

7.6.1.10 Remote Temperature Offset Register

The offset register allows the TMP461-SP device to store any system offset compensation value that may result from precision calibration. The value in the register is stored in the same format as the temperature result, and is added to the remote temperature result upon every conversion. Combined with the η-factor correction, this function allows for very accurate system calibration over the entire temperature range.

7.6.1.11 Manufacturer Identification Register

The TMP461-SP device allows for the two-wire bus controller to query the device for manufacturer and device IDs to enable software identification of the device at the particular two-wire bus address. The manufacturer ID is obtained by reading from pointer address FEh. The TMP461-SP device reads 55h for the manufacturer code.

版权 © 2017–2020, Texas Instruments Incorporated

8 Application and Implementation

注

Information in the following applications sections is not part of the TI component specification, and TI does not warrant its accuracy or completeness. TI's customers are responsible for determining suitability of components for their purposes. Customers should validate and test their design implementation to confirm system functionality.

8.1 Application Information

The TMP461-SP device requires only a transistor connected between the D+ and D– pins for remote temperature measurement. Tie the D+ pin to D– or GND if the remote channel is not used and only the local temperature is measured. The SDA, ALERT, and THERM pins (and SCL, if driven by an open-drain output) require pullup resistors as part of the communication bus. A 0.1-µF power-supply decoupling capacitor is recommended for local bypassing. 图 18 illustrates the typical configurations for the TMP461-SP device.

8.2 Typical Application

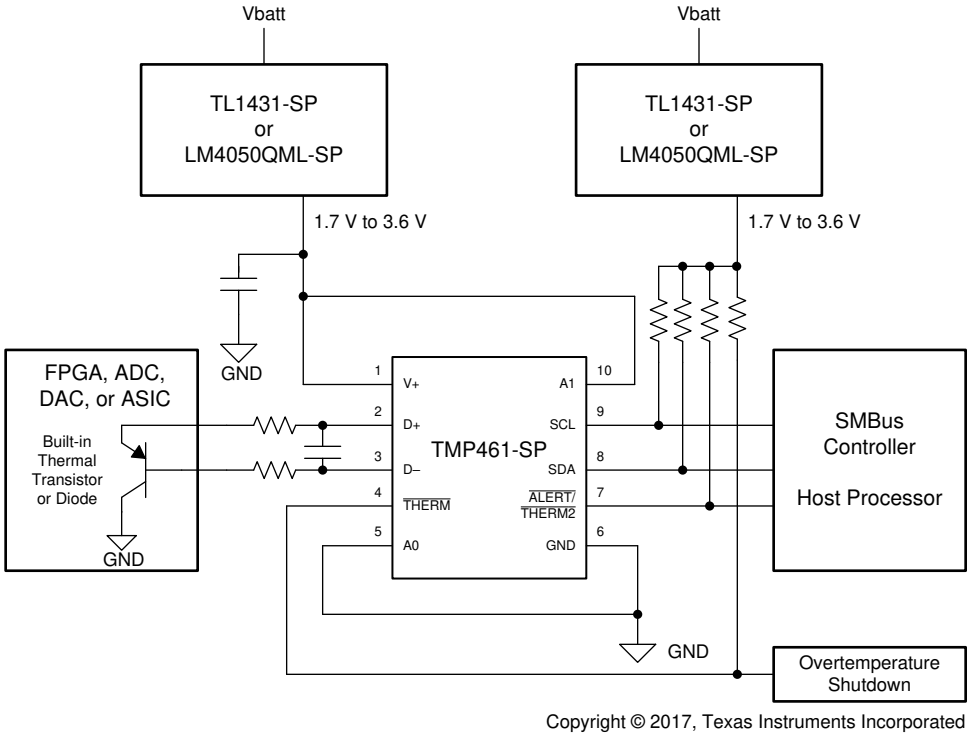

图 18. TMP461-SP Basic Connections Using a Processor Built-In Remote Transistor

8.2.1 Design Requirements

The TMP461-SP device is designed to be used with either discrete transistors or substrate transistors built into processor chips and application-specific integrated circuits (ASICs). Either NPN or PNP transistors can be used, as long as the base-emitter junction is used as the remote temperature sense. NPN transistors must be diode-connected. PNP transistors can either be transistor- or diode-connected (see 图 18).

Errors in remote temperature sensor readings are typically the consequence of the ideality factor and current excitation used by the TMP461-SP device versus the manufacturer-specified operating current for a given transistor. Some manufacturers specify a high-level and low-level current for the temperature-sensing substrate transistors. The TMP461-SP device uses 7.5 µA for I_{LOW} and 120 µA for I_{HIGH}.

The ideality factor (η) is a measured characteristic of a remote temperature sensor diode as compared to an ideal diode. The TMP461-SP allows for different η-factor values; see the *η-Factor Correction Register* section.

版权 © 2017–2020, Texas Instruments Incorporated

Typical Application (接下页)

The ideality factor for the TMP461-SP device is trimmed to be 1.008. For transistors that have an ideality factor that does not match the TMP461-SP, 公式 4 can be used to calculate the temperature error.

注

For 公式 4 to be used correctly, the actual temperature (°C) must be converted to Kelvin (K).

$$T_{ERR} = \left(\frac{\eta - 1.008}{1.008}\right) \times (273.15 + T(°C)) \quad (4)$$

where

- T_{ERR} = error in the TMP461-SP device because $\eta \neq 1.008$,
- η = ideality factor of the remote temperature sensor,
- T(°C) = actual temperature, and

In 公式 4, the degree of delta is the same for °C and K.

For η = 1.004 and T(°C) = 100°C:

$$T_{ERR} = \left(\frac{1.004 - 1.008}{1.008}\right) \times (273.15 + 100°C)$$

$$T_{ERR} = -1.48°C \quad (5)$$

If a discrete transistor is used as the remote temperature sensor with the TMP461-SP, the best accuracy can be achieved by selecting the transistor according to the following criteria:

1. Base-emitter voltage is > 0.25 V at 7.5 μA, at the highest-sensed temperature.
2. Base-emitter voltage is < 0.95 V at 120 μA, at the lowest-sensed temperature.
3. Base resistance is < 100 Ω.
4. Tight control of V_{BE} characteristics indicated by small variations in h_{FE} (that is, 50 to 150).

Based on this criteria, two recommended small-signal transistors are the 2N3904 (NPN) or 2N3906 (PNP).

8.2.2 Detailed Design Procedure

The local temperature sensor inside the TMP461-SP device monitors the ambient air around the device. The thermal time constant for the TMP461-SP device is approximately two seconds. This constant implies that if the ambient air changes quickly by 100°C, then the TMP461-SP device takes approximately 10 seconds (that is, five thermal time constants) to settle to within 1°C of the final value. In most applications, the TMP461-SP package is in electrical, and therefore thermal, contact with the printed circuit board (PCB), as well as subjected to forced airflow. The accuracy of the measured temperature directly depends on how accurately the PCB and forced airflow temperatures represent the temperature that the TMP461-SP is measuring. Additionally, the internal power dissipation of the TMP461-SP can cause the temperature to rise above the ambient or PCB temperature. The internal power dissipated as a result of exciting the remote temperature sensor is negligible because of the small currents used. 公式 6 can be used to calculate the average conversion current for power dissipation and self-heating based on the number of conversions per second and temperature sensor channel enabled. 公式 7 shows an example with local and remote sensor channels enabled and 16 conversions per second; see the *Electrical Characteristics* table for typical values required for these calculations. For a 3.3-V supply and a conversion rate of 16 conversions per second, the TMP461-SP device dissipates 0.531 mW (PD_{IQ} = 3.3 V × 161 μA) when both the remote and local channels are enabled.

$$\begin{aligned}\text{Average Conversion Current} = {} & (\text{Local ADC Conversion Time}) \times (\text{Conversions per Second}) \times (\text{Local Active } I_Q) \\ & + (\text{Remote ADC Conversion Time}) \times (\text{Conversions per Second}) \times (\text{Remote Active } I_Q) \\ & + (\text{Standby Mode } I_Q) \times [1 - (\text{Local ADC Conversion Time} + \text{Remote ADC Conversion Time}) \times (\text{Conversions per Second})]\end{aligned} \quad (6)$$

Typical Application (接下页)

$$\begin{aligned}\text{Average Conversion Current} &= (15\ \text{ms})\left(\frac{16}{\text{s}}\right)\times(240\ \mu\text{A}) \\ &+(15\ \text{ms})\times\left(\frac{16}{\text{s}}\right)(400\ \mu\text{A}) \\ &+(15\ \mu\text{A})\times\left[1-(15\ \text{ms}+15\ \text{ms})\times\left(\frac{16}{\text{s}}\right)\right] \\ &= 161\ \mu\text{A}\end{aligned} \tag{7}$$

The temperature measurement accuracy of the TMP461-SP device depends on the remote and local temperature sensor being at the same temperature as the system point being monitored. If the temperature sensor is not in good thermal contact with the part of the system being monitored, then there is a delay between the sensor response and the system changing temperature. This delay is usually not a concern for remote temperature-sensing applications that use a substrate transistor (or a small, SOT23 transistor) placed close to the device being monitored.

版权 © 2017–2020, Texas Instruments Incorporated

Typical Application (接下页)

8.2.3 Application Curve

图 19 shows the typical step response to submerging a sensor in an oil bath with a temperature of 100°C.

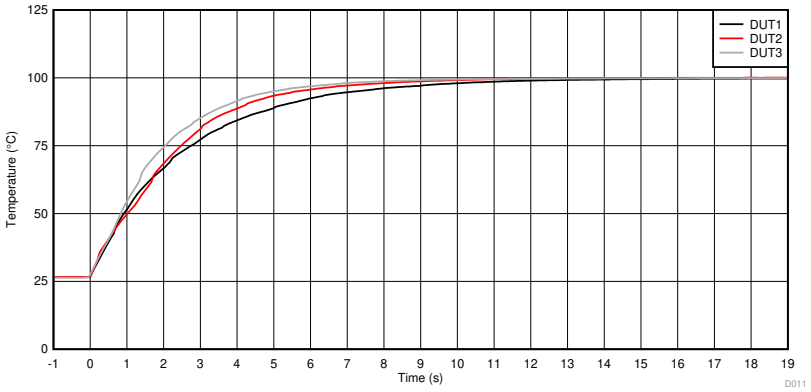

图 19. Temperature Step Response

8.3 Radiation Environments

Careful consideration should be given to environmental conditions when using a product in a radiation environment.

8.3.1 Single Event Latch-Up

One-time single event latch-up (SEL) testing was preformed according to EIA/JEDEC Standard, EIA/JEDEC57. The linear energy transfer threshold (LETth) shown in Features is the maximum LET tested. A test report is available upon request.

8.3.2 Single Event Functional Interrupt

To mitigate effects of single-event upsets and single-event functional interrupts, it is recommended that appropriate value be written to the pointer register each time a read operation is performed. Relying on the last value stored in the pointer register may increase the probability of a failed read due to a single event upset.

If other functions are being used, such as the temperature limit register, it may be necessary to rewrite these registers on occasion.

8.3.3 Single Event Upset

A report on single event upset (SEU) is available upon request.

9 Power Supply Recommendations

The TMP461-SP device operates with a power-supply range of 1.7 V to 3.6 V. The device is optimized for operation at a 3.3-V supply but can measure temperature accurately in the full supply range.

A power-supply bypass capacitor is recommended. Place this capacitor as close as possible to the supply and ground pins of the device. A typical value for this supply bypass capacitor is 0.1 μF. Applications with noisy or high-impedance power supplies may require additional decoupling capacitors to reject power-supply noise.

10 Layout

10.1 Layout Guidelines

Remote temperature sensing on the TMP461-SP device measures very small voltages using very low currents; therefore, noise at the device inputs must be minimized. Most applications using the TMP461-SP have high digital content, with several clocks and logic-level transitions that create a noisy environment. Layout must adhere to the following guidelines:

1. Place the TMP461-SP device as close to the remote junction sensor as possible.
2. Route the D+ and D– traces next to each other and shield them from adjacent signals through the use of ground guard traces, as shown in 图 20. If a multilayer PCB is used, bury these traces between the ground or V+ planes to shield them from extrinsic noise sources. 5-mil (0.127 mm) PCB traces are recommended.
3. Minimize additional thermocouple junctions caused by copper-to-solder connections. If these junctions are used, make the same number and approximate locations of copper-to-solder connections in both the D+ and D– connections to cancel any thermocouple effects.
4. Use a 0.1-μF local bypass capacitor directly between the V+ and GND of the TMP461-SP device. For optimum measurement performance, minimize filter capacitance between D+ and D– to 1000 pF or less. This capacitance includes any cable capacitance between the remote temperature sensor and the TMP461-SP device.
5. If the connection between the remote temperature sensor and the TMP461-SP device is less than 8-in (20.32 cm) long, use a twisted-wire pair connection. For lengths greater than 8 in, use a twisted, shielded pair with the shield grounded as close to the TMP461-SP device as possible. Leave the remote sensor connection end of the shield wire open to avoid ground loops and 60-Hz pickup.
6. Thoroughly clean and remove all flux residue in and around the pins of the TMP461-SP device to avoid temperature offset readings as a result of leakage paths between D+ and GND, or between D+ and V+.

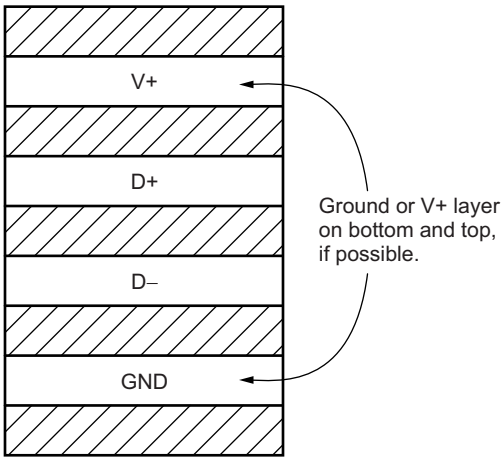

NOTE: Use a minimum of 5-mil (0.127 mm) traces with 5-mil spacing.

图 20. Suggested PCB Layer Cross-Section

版权 © 2017–2020, Texas Instruments Incorporated

10.2 Layout Example

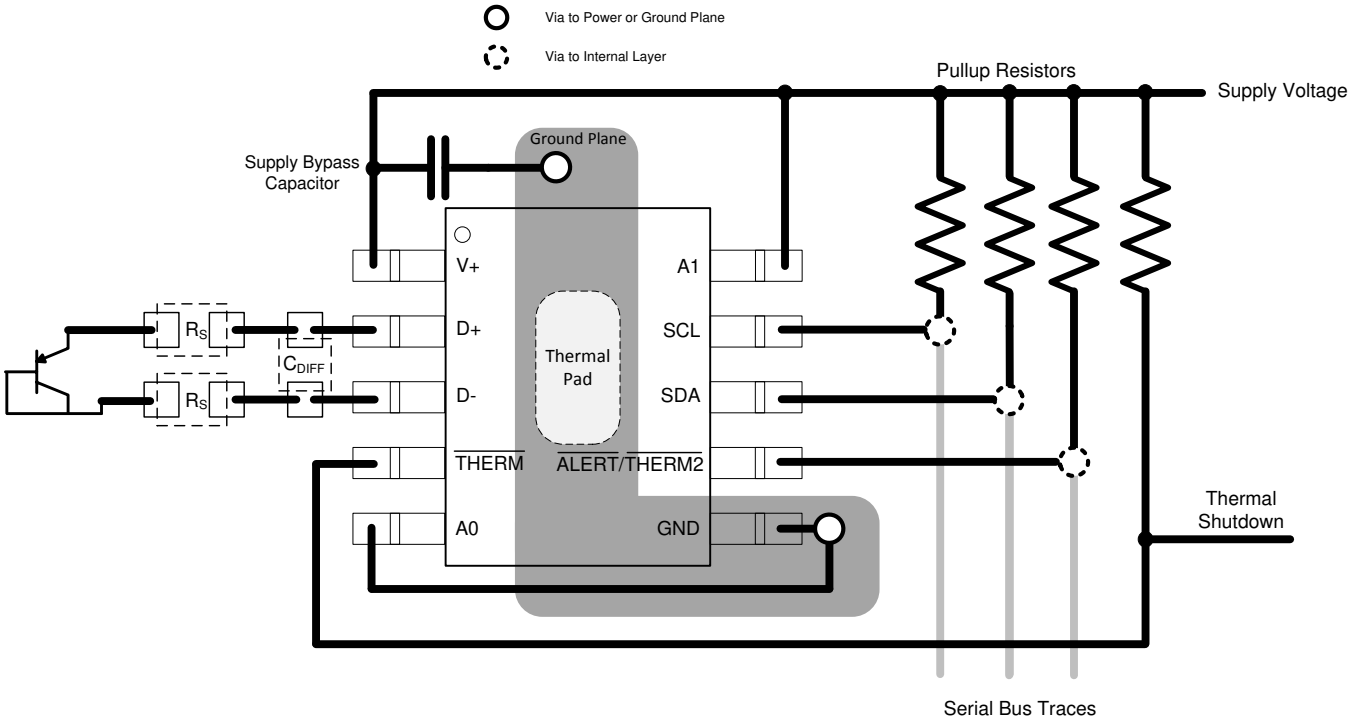

图 21. TMP461-SP Layout Example

11 器件和文档支持

11.1 接收文档更新通知

要接收文档更新通知，请导航至 ti.com.cn 上的器件产品文件夹。单击右上角的*通知我*进行注册，即可每周接收产品信息更改摘要。有关更改的详细信息，请查看任何已修订文档中包含的修订历史记录。

11.2 社区资源

TI E2E™ support forums are an engineer's go-to source for fast, verified answers and design help — straight from the experts. Search existing answers or ask your own question to get the quick design help you need.

Linked content is provided "AS IS" by the respective contributors. They do not constitute TI specifications and do not necessarily reflect TI's views; see TI's Terms of Use.

11.3 商标

E2E is a trademark of Texas Instruments.
SMBus is a trademark of Intel Corporation.
All other trademarks are the property of their respective owners.

11.4 静电放电警告

ESD 可能会损坏该集成电路。德州仪器 (TI) 建议通过适当的预防措施处理所有集成电路。如果不遵守正确的处理措施和安装程序，可能会损坏集成电路。

ESD 的损坏小至导致微小的性能降级，大至整个器件故障。 精密的集成电路可能更容易受到损坏，这是因为非常细微的参数更改都可能会导致器件与其发布的规格不相符。

11.5 Glossary

SLYZ022 — *TI Glossary*.

This glossary lists and explains terms, acronyms, and definitions.

12 机械、封装和可订购信息

以下页面包含机械、封装和可订购信息。这些信息是指定器件的最新可用数据。数据如有变更，恕不另行通知，且不会对此文档进行修订。如需获取此数据表的浏览器版本，请查阅左侧的导航栏。

版权 © 2017–2020, Texas Instruments Incorporated

PACKAGING INFORMATION

Orderable part number	Status (1)	Material type (2)	Package | Pins	Package qty | Carrier	RoHS (3)	Lead finish/ Ball material (4)	MSL rating/ Peak reflow (5)	Op temp (°C)	Part marking (6)
5962-1721801VXC	Active	Production	CFP (HKU) | 10	25 | TUBE	ROHS Exempt	NIAU	N/A for Pkg Type	-55 to 125	5962-1721801VXC TMP461-SP
5962-1721801VXC.A	Active	Production	CFP (HKU) | 10	25 | TUBE	ROHS Exempt	NIAU	N/A for Pkg Type	-55 to 125	5962-1721801VXC TMP461-SP
5962R1721801VXC	Active	Production	CFP (HKU) | 10	25 | TUBE	ROHS Exempt	NIAU	N/A for Pkg Type	-55 to 125	5962R1721801VXC TMP461-SP
5962R1721801VXC.A	Active	Production	CFP (HKU) | 10	25 | TUBE	ROHS Exempt	NIAU	N/A for Pkg Type	-55 to 125	5962R1721801VXC TMP461-SP
TMP461HKU/EM	Active	Production	CFP (HKU) | 10	25 | TUBE	ROHS Exempt	NIAU	N/A for Pkg Type	25 to 25	TMP461HKU/EM EVAL ONLY
TMP461HKU/EM.A	Active	Production	CFP (HKU) | 10	25 | TUBE	ROHS Exempt	NIAU	N/A for Pkg Type	25 to 25	TMP461HKU/EM EVAL ONLY

(1) **Status:** For more details on status, see our product life cycle.

(2) **Material type:** When designated, preproduction parts are prototypes/experimental devices, and are not yet approved or released for full production. Testing and final process, including without limitation quality assurance, reliability performance testing, and/or process qualification, may not yet be complete, and this item is subject to further changes or possible discontinuation. If available for ordering, purchases will be subject to an additional waiver at checkout, and are intended for early internal evaluation purposes only. These items are sold without warranties of any kind.

(3) **RoHS values:** Yes, No, RoHS Exempt. See the TI RoHS Statement for additional information and value definition.

(4) **Lead finish/Ball material:** Parts may have multiple material finish options. Finish options are separated by a vertical ruled line. Lead finish/Ball material values may wrap to two lines if the finish value exceeds the maximum column width.

(5) **MSL rating/Peak reflow:** The moisture sensitivity level ratings and peak solder (reflow) temperatures. In the event that a part has multiple moisture sensitivity ratings, only the lowest level per JEDEC standards is shown. Refer to the shipping label for the actual reflow temperature that will be used to mount the part to the printed circuit board.

(6) **Part marking:** There may be an additional marking, which relates to the logo, the lot trace code information, or the environmental category of the part.

Multiple part markings will be inside parentheses. Only one part marking contained in parentheses and separated by a "~" will appear on a part. If a line is indented then it is a continuation of the previous line and the two combined represent the entire part marking for that device.

Important Information and Disclaimer: The information provided on this page represents TI's knowledge and belief as of the date that it is provided. TI bases its knowledge and belief on information provided by third parties, and makes no representation or warranty as to the accuracy of such information. Efforts are underway to better integrate information from third parties. TI has taken and continues to take reasonable steps to provide representative and accurate information but may not have conducted destructive testing or chemical analysis on incoming materials and chemicals. TI and TI suppliers consider certain information to be proprietary, and thus CAS numbers and other limited information may not be available for release.

In no event shall TI's liability arising out of such information exceed the total purchase price of the TI part(s) at issue in this document sold by TI to Customer on an annual basis.

OTHER QUALIFIED VERSIONS OF TMP461-SP :

- Catalog : TMP461
- Enhanced Product : TMP461-EP

NOTE: Qualified Version Definitions:

- Catalog - TI's standard catalog product
- Enhanced Product - Supports Defense, Aerospace and Medical Applications

TUBE

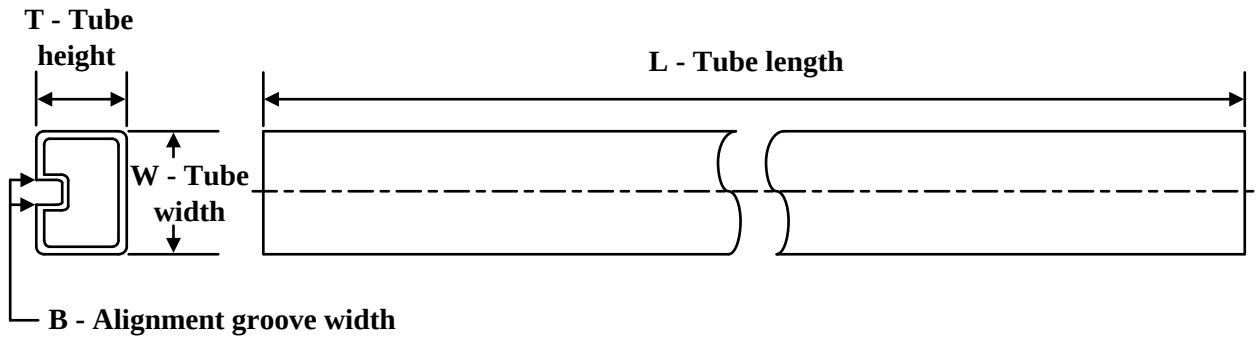

*All dimensions are nominal

Device	Package Name	Package Type	Pins	SPQ	L (mm)	W (mm)	T (µm)	B (mm)
5962-1721801VXC	HKU	CFP	10	25	506.98	26.16	6220	NA
5962-1721801VXC.A	HKU	CFP	10	25	506.98	26.16	6220	NA
5962R1721801VXC	HKU	CFP	10	25	506.98	26.16	6220	NA
5962R1721801VXC.A	HKU	CFP	10	25	506.98	26.16	6220	NA
TMP461HKU/EM	HKU	CFP	10	25	506.98	26.16	6220	NA
TMP461HKU/EM.A	HKU	CFP	10	25	506.98	26.16	6220	NA

PACKAGE OUTLINE

HKU0010A

CFP - 2.63mm max height

CERAMIC DUAL FLATPACK

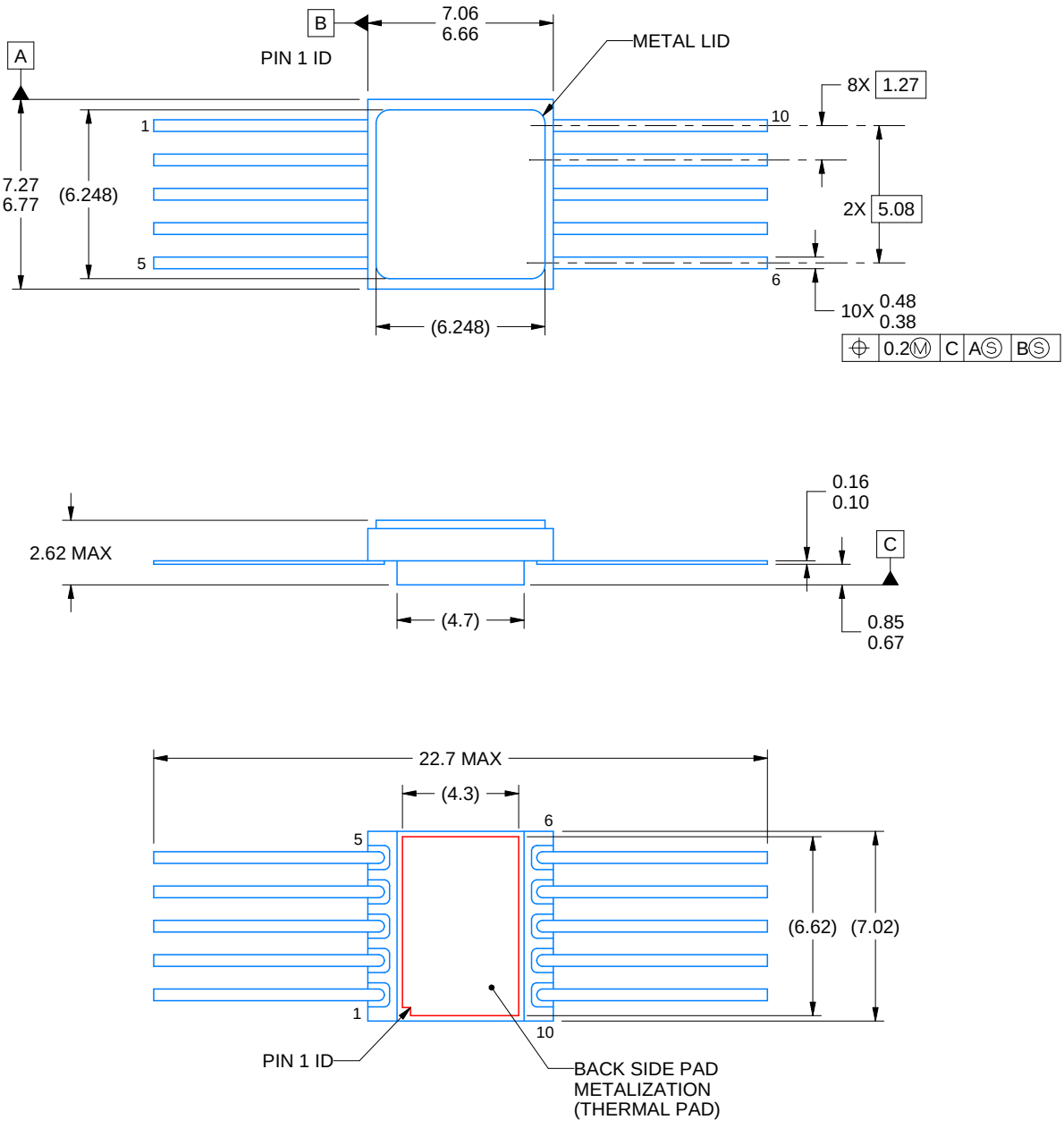

4226200/A 09/2020

NOTES:

1. All linear dimensions are in millimeters. Any dimensions in parenthesis are for reference only. Dimensioning and tolerancing per ASME Y14.5M.
2. This drawing is subject to change without notice.
3. This package is hermetically sealed with a metal lid.
4. The terminals are gold plated.
5. This drawing does not comply with MIL STD 1835. Do not use this package for compliant product.
6. Metal lid is connected to back side pad metalization.

EXAMPLE BOARD LAYOUT

HKU0010A

CFP - 2.63mm max height

CERAMIC DUAL FLATPACK

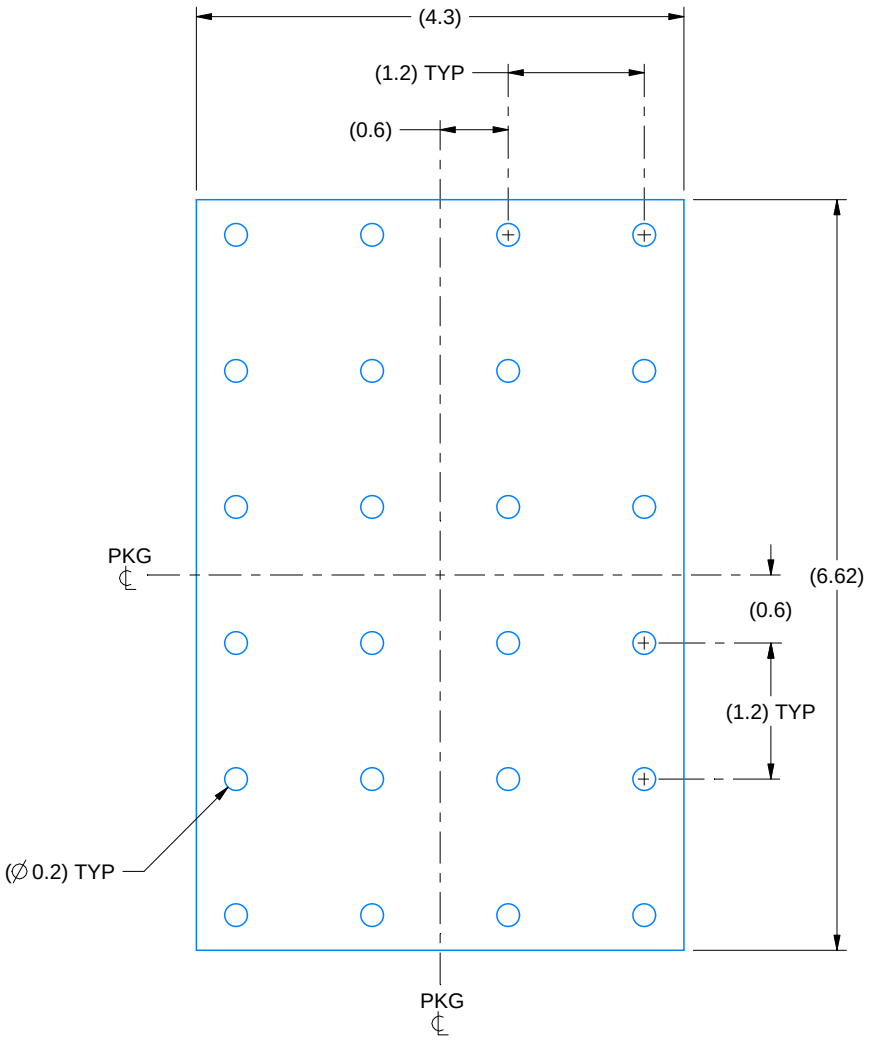

HEATSINK LAND PATTERN EXAMPLE
EXPOSED METAL SHOWN
SCALE:15X

重要通知和免责声明

TI“按原样”提供技术和可靠性数据（包括数据表）、设计资源（包括参考设计）、应用或其他设计建议、网络工具、安全信息和其他资源，不保证没有瑕疵且不做出任何明示或暗示的担保，包括但不限于对适销性、与某特定用途的适用性或不侵犯任何第三方知识产权的暗示担保。

这些资源可供使用 TI 产品进行设计的熟练开发人员使用。您将自行承担以下全部责任：(1) 针对您的应用选择合适的 TI 产品，(2) 设计、验证并测试您的应用，(3) 确保您的应用满足相应标准以及任何其他安全、安保法规或其他要求。

这些资源如有变更，恕不另行通知。TI 授权您仅可将这些资源用于研发本资源所述的 TI 产品的相关应用。严禁以其他方式对这些资源进行复制或展示。您无权使用任何其他 TI 知识产权或任何第三方知识产权。对于因您对这些资源的使用而对 TI 及其代表造成的任何索赔、损害、成本、损失和债务，您将全额赔偿，TI 对此概不负责。

TI 提供的产品受 TI 销售条款)、TI 通用质量指南 或 ti.com 上其他适用条款或 TI 产品随附的其他适用条款的约束。TI 提供这些资源并不会扩展或以其他方式更改 TI 针对 TI 产品发布的适用的担保或担保免责声明。 除非德州仪器 (TI) 明确将某产品指定为定制产品或客户特定产品，否则其产品均为按确定价格收入目录的标准通用器件。

TI 反对并拒绝您可能提出的任何其他或不同的条款。

版权所有 © 2026，德州仪器 (TI) 公司

最后更新日期：2025 年 10 月