TLV237x 具有关断功能的 500-µA/Ch、3-MHz 轨至轨输入和输出运算放大器

1 特性

- 轨至轨输入和输出
- 宽带宽：3MHz
- 高转换率：2.4 V/µs
- 高输出驱动：105mA
- 电源电压范围：2.7V 至 16V
- 电源电流：550µA/通道
- 低功耗关断模式
  - $I_{DD(SHDN)}$：25µA/通道
- 输入偏置电流：1pA
- 输入噪声电压：39nV/√Hz
- 单位增益稳定
- 额定 温度范围：
  - −40°C 至 +125°C（工业级）
- 超小型封装：
  - 5 引脚或 6 引脚 SOT-23（TLV2370、TLV2371）
  - 8 引脚或 10 引脚 VSSOP（TLV2372、TLV2373）

2 应用

- 白色家电
- 手持测试设备
- 便携式血糖仪
- 远程感测
- 有源滤波器
- 工业自动化
- 电池供电型电子产品

3 说明

TLV237x 单电源运算放大器具有轨至轨输入和输出功能。TLV237x 在扩展级工业温度范围内的最小工作电源电压低至 2.7V，同时还增添了轨到轨输出摆幅特性。TLV237x 可由低至仅 550µA 的电流提供 3MHz 带宽。最大建议电源电压为 16V，由此，器件可以由多种可充电电池供电运行（支持 ±8V 低至 ±1.35V 的电源）。

适用于高阻抗传感器接口的 CMOS 输入特性以及低压运行功能使其成为电池供电应用中 TLV227x 的理想替代 器件。轨到轨输入级进一步增强了其多功能性。TLV237x 是 TI 快速发展的 RRIO 产品中推出的第七款器件，也是首款具有出色交流性能且可支持高达 16V 电源轨的器件。

该系列所有产品均采用 PDIP 与 SOIC 封装，单通道器件采用小型 SOT-23 封装，双通道器件采用 MSOP 封装，四通道产品采用 TSSOP 封装。TLV237x 可在 2.7V 电压下运行，兼容锂离子电池供电系统和当今多种微功耗微控制器工作电源电压范围，包括 TI 的 MSP430。

器件信息(1)

器件型号	封装	封装尺寸（标称值）
TLV237x	PDIP (8)	9.81mm × 6.35mm
	PDIP (14)	19.30mm x 6.35mm
	SOIC (8)	4.90mm × 3.91mm
	SOIC (14)	8.65mm x 3.91mm
	TSSOP (14)	5.00mm x 4.40mm
	TSSOP (16)	
	SOT-23 (6)	2.90mm x 1.60mm
	SOT-23 (5)	
	VSSOP (8)	3.00mm × 3.00mm
	VSSOP (10)	

(1) 如需了解所有可用封装，请参阅产品说明书末尾的可订购产品附录。

运算放大器

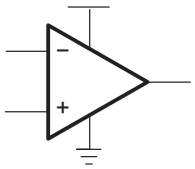

An IMPORTANT NOTICE at the end of this data sheet addresses availability, warranty, changes, use in safety-critical applications, intellectual property matters and other important disclaimers. PRODUCTION DATA.

目录

1 特性 ... 1
2 应用 ... 1
3 说明 ... 1
4 修订历史记录 ... 2
5 **Device Comparison Tables** ... 3
6 **Pin Configuration and Functions** ... 4
7 **Specifications** ... 9
7.1 Absolute Maximum Ratings ... 9
7.2 Recommended Operating Conditions ... 9
7.3 Thermal Information: TLV2370 ... 10
7.4 Thermal Information: TLV2371 ... 10
7.5 Thermal Information: TLV2372 ... 10
7.6 Thermal Information: TLV2373 ... 11
7.7 Thermal Information: TLV2374 ... 11
7.8 Thermal Information: TLV2375 ... 11
7.9 Electrical Characteristics ... 12
8 **Typical Characteristics** ... 18
9 **Detailed Description** ... 25
9.1 Overview ... 25
9.2 Functional Block Diagram ... 25
9.3 Feature Description ... 26
9.4 Device Functional Modes ... 27
10 **Application and Implementation** ... 28
10.1 Application Information ... 28
10.2 Typical Application ... 28
11 **Power Supply Recommendations** ... 30
12 **Layout** ... 30
12.1 Layout Guidelines ... 30
12.2 Layout Example ... 31
12.3 Power Dissipation Considerations ... 32
13 器件和文档支持 ... 33
13.1 文档支持 ... 33
13.2 相关链接 ... 33
13.3 接收文档更新通知 ... 33
13.4 社区资源 ... 33
13.5 商标 ... 33
13.6 静电放电警告 ... 33
13.7 Glossary ... 33
14 机械、封装和可订购信息 ... 33

4 修订历史记录

Changes from Revision E (May 2016) to Revision F — **Page**

- Changed names of pins 2 and 3 in TLV2372 D, DGK, and P packages pinout diagram ... 5

Changes from Revision D (January 2005) to Revision E — **Page**

- *添加了 ESD 额定值 表、特性 说明部分、器件功能模式、应用和实施部分、电源建议部分、布局部分、器件和文档支持部分以及机械、封装和可订购信息部分。* ... 1
- Deleted *TLV2370 and TLV2371 Available Options*, *TLV2372 AND TLV2373 Available Options*, and *TLV2374 and TLV2375 Available Options* tables ... 3
- Deleted *Continuous total power dissipation* and *lead temperature* specifications from *Absolute Maximum Ratings* table ... 9
- Deleted *Dissipation Ratings* table ... 17

Copyright © 2001–2016, Texas Instruments Incorporated

5 Device Comparison Tables

Table 1. Selection of Signal Amplifier Products(1)

DEVICE	V_{DD} (V)	V_{IO} (µV)	I_Q/Ch (µA)	I_{IB} (pA)	GBW (MHz)	SR (V/µs)	SHUTDOWN	RAIL-TO-RAIL	SINGLES, DUALS, QUADS
TLV237x	2.7 to 16	500	550	1	3	2.4	Yes	I/O	S, D, Q
TLC227x	4 to 16	300	1100	1	2.2	3.6	—	O	D, Q
TLV27x	2.7 to 16	500	550	1	3	2.4	—	O	S, D, Q
TLC27x	3 to 16	1100	675	1	1.7	3.6	—	—	S, D, Q
TLV246x	2.7 to 16	150	550	1300	6.4	1.6	Yes	I/O	S, D, Q
TLV247x	2.7 to 16	250	600	2	2.8	1.5	Yes	I/O	S, D, Q
TLV244x	2.7 to 10	300	725	1	1.8	1.4	—	O	D, Q

(1) Typical values measured at 5 V and 25°C.

Table 2. Family Package Table(1)

DEVICE	NUMBER OF CHANNELS	PACKAGE TYPES					SHUTDOWN	UNIVERSAL EVM BOARD
		PDIP	SOIC	SOT-23	TSSOP	MSOP		
TLV2370	1	8	8	6	—	—	Yes	See the *EVM Selection Guide*
TLV2371	1	8	8	5	—	—	—	
TLV2372	2	8	8	—	—	8	—	
TLV2373	2	14	14	—	—	10	Yes	
TLV2374	4	14	14	—	14	—	—	
TLV2375	4	16	16	—	16	—	Yes	

(1) For the most current package and ordering information, see the Package Option Addendum at the end of this document, or see the TI website at www.ti.com.

Copyright © 2001–2016, Texas Instruments Incorporated

6 Pin Configuration and Functions

TLV2370 DBV Package
6-Pin SOT-23
Top View

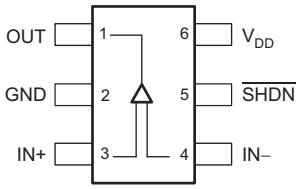

TLV2370 D and P Packages
8-Pin SOIC and PDIP
Top View

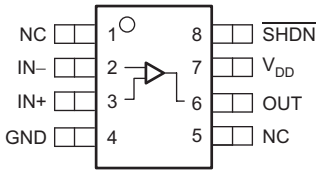

Pin Functions: TLV2370

PIN			I/O	DESCRIPTION
NAME	SOT-23	SOIC, PDIP		
GND	2	4	—	Ground connection
IN–	4	2	I	Negative (inverting) input
IN+	3	3	I	Positive (noninverting) input
NC	—	1, 5	—	No internal connection (can be left floating)
OUT	1	6	O	Output
$\overline{SHDN}$	5	8	I	Shutdown control (active low, can be left floating)
V_{DD}	6	7	—	Positive power supply

TLV2371 DBV Package
5-Pin SOT-23
Top View

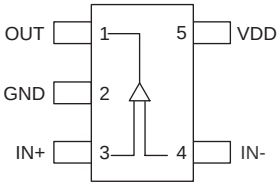

TLV2371 D and P Packages
8-Pin SOIC and PDIP
Top View

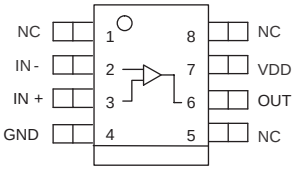

NC- no internal connection

Pin Functions: TLV2371

PIN			I/O	DESCRIPTION
NAME	SOT-23	SOIC, PDIP		
GND	2	4	—	Ground connection
IN–	4	2	I	Negative (inverting) input
IN+	3	3	I	Positive (noninverting) input
NC	—	1, 5, 8	—	No internal connection (can be left floating)
OUT	1	6	O	Output
V_{DD}	5	7	—	Positive power supply

TLV2372 D, DGK , and P Packages
8-Pin SOIC, VSSOP, and PDIP
Top View

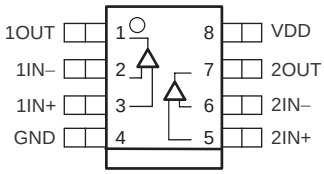

Copyright © 2001–2016, Texas Instruments Incorporated

Pin Functions: TLV2372

PIN		I/O	DESCRIPTION
NAME	SOIC, VSSOP, PDIP		
GND	4	—	Ground connection
1IN–	2	I	Inverting input, channel 1
1IN+	3	I	Noninverting input, channel 1
2IN–	6	I	Inverting input, channel 2
2IN+	5	I	Noninverting input, channel 2
1OUT	1	O	Output, channel 1
2OUT	7	O	Output, channel 2
V_{DD}	8	—	Positive power supply

Copyright © 2001–2016, Texas Instruments Incorporated

TLV2373 DGS Package
10-Pin VSSOP
Top View

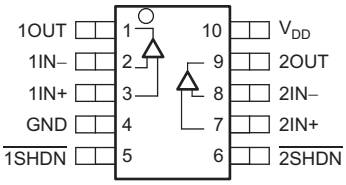

TLV2373 D and N Packages
14-Pin SOIC and PDIP
Top View

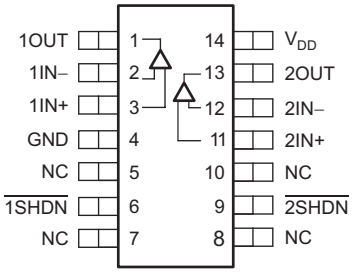

Pin Functions: TLV2373

PIN			I/O	DESCRIPTION
NAME	SOIC, PDIP	VSSOP		
GND	4	4	—	Ground connection
1IN–	2	2	I	Inverting input, channel 1
1IN+	3	3	I	Noninverting input, channel 1
2IN–	12	8	I	Inverting input, channel 2
2IN+	11	7	I	Noninverting input, channel 2
1OUT	1	1	O	Output, channel 1
2OUT	13	9	O	Output, channel 2
$\overline{1SHDN}$	6	5	I	Shutdown control, channel 1, (active low, can be left floating)
$\overline{2SHDN}$	9	6	I	Shutdown control, channel 2, (active low, can be left floating)
V_{DD}	14	10	—	Positive power supply
NC	5, 7, 8, 10	—	—	No internal connection (can be left floating)

Copyright © 2001–2016, Texas Instruments Incorporated

TLV2374 D, N, and PW Packages
14-Pin SOIC, PDIP, and TSSOP
Top View

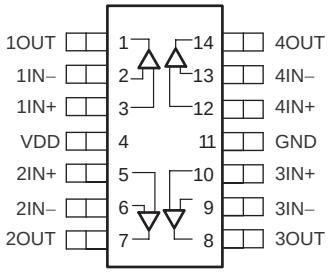

Pin Functions: TLV2374

PIN		I/O	DESCRIPTION
NAME	SOIC, PDIP, TSSOP		
GND	11	—	Ground connection
1IN–	2	I	Inverting input, channel 1
1IN+	3	I	Noninverting input, channel 1
2IN–	6	I	Inverting input, channel 2
2IN+	5	I	Noninverting input, channel 2
3IN–	9	I	Inverting input, channel 3
3IN+	10	I	Noninverting input, channel 3
4IN–	13	I	Inverting input, channel 4
4IN+	12	I	Noninverting input, channel 4
1OUT	1	O	Output, channel 1
2OUT	7	O	Output, channel 2
3OUT	8	O	Output, channel 3
4OUT	14	O	Output, channel 4
V_{DD}	4	—	Positive power supply

Copyright © 2001–2016, Texas Instruments Incorporated

TLV2375 D, N, and PW Packages
16-Pin SOIC, PDIP, and TSSOP
Top View

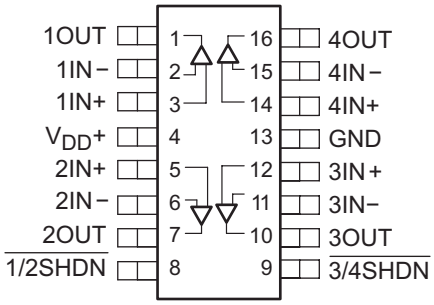

Pin Functions: TLV2375

PIN		I/O	DESCRIPTION
NAME	SOIC, PDIP, TSSOP		
GND	13	—	Ground connection
1IN–	2	I	Inverting input, channel 1
2IN–	6	I	Inverting input, channel 2
3IN–	11	I	Inverting input, channel 3
4IN–	15	I	Inverting input, channel 4
1IN+	3	I	Noninverting input, channel 1
2IN+	5	I	Noninverting input, channel 2
3IN+	12	I	Noninverting input, channel 3
4IN+	14	I	Noninverting input, channel 4
1OUT	1	O	Output, channel 1
2OUT	7	O	Output, channel 2
3OUT	10	O	Output, channel 3
4OUT	16	O	Output, channel 4
$\overline{1/2SHDN}$	8	I	Shutdown control, channels 1 and 2, (active low, can be left floating)
$\overline{3/4SHDN}$	9	I	Shutdown control, channels 3 and 4, (active low, can be left floating)
V_{DD}	4	—	Positive power supply

Copyright © 2001–2016, Texas Instruments Incorporated

7 Specifications

7.1 Absolute Maximum Ratings

over operating free-air temperature range (unless otherwise noted)[1]

		MIN	MAX	UNIT
Voltage	Supply voltage, V_{DD} [2]		16.5	V
	Differential input voltage, V_{ID}	$-V_{DD}$	V_{DD}	
	Input voltage, V_I[2]	–0.2	V_{DD} + 0.2	
Current	Input current, I_{IN}	–10	10	mA
	Output current, I_O	–100	100	
Temperature	Operating free-air temperature, T_A: I-suffix	–40	125	°C
	Maximum junction temperature, T_J		150	
	Storage temperature, T_{stg}	–65	150	

(1) Stresses beyond those listed under *Absolute Maximum Ratings* may cause permanent damage to the device. These are stress ratings only, which do not imply functional operation of the device at these or any other conditions beyond those indicated under *Recommended Operating Conditions*. Exposure to absolute-maximum-rated conditions for extended periods may affect device reliability.
(2) All voltage values, except differential voltages, are with respect to GND.

7.2 Recommended Operating Conditions

over operating free-air temperature range (unless otherwise noted).

		MIN	MAX	UNIT
Supply voltage, V_{DD}	Single supply	2.7	16	V
	Split supply	±1.35	±8	
Common-mode input voltage, V_{CM}		0	V_{DD}	V
Operating free-air temperature, T_A	I-suffix	–40	125	°C
Turnon voltage (shutdown pin voltage level), $V_{(ON)}$, relative to GND pin voltage			2	V
Turnoff (shutdown pin voltage level), $V_{(OFF)}$, relative to GND pin voltage		0.8		V

Copyright © 2001–2016, Texas Instruments Incorporated

7.3 Thermal Information: TLV2370

THERMAL METRIC[1]		TLV2370			UNIT
		DBV (SOT-23)	D (SOIC)	P (PDIP)	
		6 PINS	8 PINS	8 PINS	
$R_{\theta JA}$	Junction-to-ambient thermal resistance	228.5	138.4	49.2	°C/W
$R_{\theta JC(top)}$	Junction-to-case (top) thermal resistance	99.1	89.5	39.4	°C/W
$R_{\theta JB}$	Junction-to-board thermal resistance	54.6	78.6	26.4	°C/W
ψ_{JT}	Junction-to-top characterization parameter	7.7	29.9	15.4	°C/W
ψ_{JB}	Junction-to-board characterization parameter	53.8	78.1	26.3	°C/W
$R_{\theta JC(bot)}$	Junction-to-case (bottom) thermal resistance	n/a	n/a	n/a	°C/W

(1) For more information about traditional and new thermal metrics, see the *Semiconductor and IC Package Thermal Metrics* application report.

7.4 Thermal Information: TLV2371

THERMAL METRIC[1]		TLV2371			UNIT
		DBV (SOT-23)	D (SOIC)	P (PDIP)	
		5 PINS	8 PINS	8 PINS	
$R_{\theta JA}$	Junction-to-ambient thermal resistance	228.5	138.4	49.2	°C/W
$R_{\theta JC(top)}$	Junction-to-case (top) thermal resistance	99.1	89.5	39.4	°C/W
$R_{\theta JB}$	Junction-to-board thermal resistance	54.6	78.6	26.4	°C/W
ψ_{JT}	Junction-to-top characterization parameter	7.7	29.9	15.4	°C/W
ψ_{JB}	Junction-to-board characterization parameter	53.8	78.1	26.3	°C/W
$R_{\theta JC(bot)}$	Junction-to-case (bottom) thermal resistance	n/a	n/a	n/a	°C/W

(1) For more information about traditional and new thermal metrics, see the *Semiconductor and IC Package Thermal Metrics* application report.

7.5 Thermal Information: TLV2372

THERMAL METRIC[1]		TLV2372			UNIT
		D (SOIC)	DGK (VSSOP)	P (PDIP)	
		8 PINS	8 PINS	8 PINS	
$R_{\theta JA}$	Junction-to-ambient thermal resistance	138.4	191.2	49.2	°C/W
$R_{\theta JC(top)}$	Junction-to-case (top) thermal resistance	89.5	61.9	39.4	°C/W
$R_{\theta JB}$	Junction-to-board thermal resistance	78.6	111.9	26.4	°C/W
ψ_{JT}	Junction-to-top characterization parameter	29.9	5.1	15.4	°C/W
ψ_{JB}	Junction-to-board characterization parameter	78.1	110.2	26.3	°C/W
$R_{\theta JC(bot)}$	Junction-to-case (bottom) thermal resistance	n/a	n/a	n/a	°C/W

(1) For more information about traditional and new thermal metrics, see the *Semiconductor and IC Package Thermal Metrics* application report.

Copyright © 2001–2016, Texas Instruments Incorporated

7.6 Thermal Information: TLV2373

THERMAL METRIC[1]		TLV2373			UNIT
		DGS (VSSOP)	D (SOIC)	P (PDIP)	
		10 PINS	14 PINS	14 PINS	
$R_{\theta JA}$	Junction-to-ambient thermal resistance	166.5	67	66.3	°C/W
$R_{\theta JC(top)}$	Junction-to-case (top) thermal resistance	41.8	24.1	20.5	°C/W
$R_{\theta JB}$	Junction-to-board thermal resistance	86.1	22.5	26.8	°C/W
ψ_{JT}	Junction-to-top characterization parameter	1.5	2.2	2.1	°C/W
ψ_{JB}	Junction-to-board characterization parameter	84.7	22.1	26.2	°C/W
$R_{\theta JC(bot)}$	Junction-to-case (bottom) thermal resistance	n/a	n/a	n/a	°C/W

(1) For more information about traditional and new thermal metrics, see the *Semiconductor and IC Package Thermal Metrics* application report.

7.7 Thermal Information: TLV2374

THERMAL METRIC[1]		TLV2374			UNIT
		D (SOIC)	N (PDIP)	PW (TSSOP)	
		14 PINS	14 PINS	14 PINS	
$R_{\theta JA}$	Junction-to-ambient thermal resistance	67	66.3	121	°C/W
$R_{\theta JC(top)}$	Junction-to-case (top) thermal resistance	24.1	20.5	49.4	°C/W
$R_{\theta JB}$	Junction-to-board thermal resistance	22.5	26.8	62.8	°C/W
ψ_{JT}	Junction-to-top characterization parameter	2.2	2.1	5.9	°C/W
ψ_{JB}	Junction-to-board characterization parameter	22.1	26.2	62.2	°C/W
$R_{\theta JC(bot)}$	Junction-to-case (bottom) thermal resistance	n/a	n/a	n/a	°C/W

(1) For more information about traditional and new thermal metrics, see the *Semiconductor and IC Package Thermal Metrics* application report.

7.8 Thermal Information: TLV2375

THERMAL METRIC[1]		TLV2375			UNIT
		D (SOIC)	N (PDIP)	PW (TSSOP)	
		16 PINS	16 PINS	16 PINS	
$R_{\theta JA}$	Junction-to-ambient thermal resistance	83	55.8	115.6	°C/W
$R_{\theta JC(top)}$	Junction-to-case (top) thermal resistance	44	43.1	50.5	°C/W
$R_{\theta JB}$	Junction-to-board thermal resistance	40.5	35.8	60.7	°C/W
ψ_{JT}	Junction-to-top characterization parameter	11.5	27.9	7.4	°C/W
ψ_{JB}	Junction-to-board characterization parameter	40.2	35.7	60.1	°C/W
$R_{\theta JC(bot)}$	Junction-to-case (bottom) thermal resistance	n/a	n/a	n/a	°C/W

(1) For more information about traditional and new thermal metrics, see the *Semiconductor and IC Package Thermal Metrics* application report.

Copyright © 2001–2016, Texas Instruments Incorporated

7.9 Electrical Characteristics

at T_A = 25°C, V_{DD} = 2.7 V, 5 V, and 15 V (unless otherwise noted).

PARAMETER		TEST CONDITIONS		MIN	TYP	MAX	UNIT
DC PERFORMANCE							
V_{OS}	Input offset voltage	At T_A = 25°C, V_{IC} = V_{DD}/2, V_O = V_{DD}/2, R_S = 50 Ω			2	4.5	mV
		At T_A = –40°C to +125°C, V_{IC} = V_{DD}/2, V_O = V_{DD}/2, R_S = 50 Ω				6	mV
dV_{OS}/dT	Offset voltage drift	At T_A = 25°C, V_{IC} = V_{DD}/2, V_O = V_{DD}/2, R_S = 50 Ω			2		µV/°C
CMRR	Common-mode rejection ratio	V_{DD} = 2.7 V, R_S = 50 Ω	V_{IC} = 0 to V_{DD}	50	68		dB
			At T_A = –40°C to +125°C, V_{IC} = 0 to V_{DD}	49			
			V_{IC} = 0 to V_{DD} − 1.35 V	56	70		
			At T_A = –40°C to +125°C, V_{IC} = 0 to V_{DD} − 1.35 V	54			
		V_{DD} = 5 V, R_S = 50 Ω	V_{IC} = 0 to V_{DD}	55	72		
			At T_A = –40°C to +125°C, V_{IC} = 0 to V_{DD}	54			
			V_{IC} = 0 to V_{DD} − 1.35 V	67	80		
			At T_A = –40°C to +125°C, V_{IC} = 0 to V_{DD} − 1.35 V	64			
		V_{DD} = 15 V, R_S = 50 Ω	V_{IC} = 0 to V_{DD}	64	82		
			At T_A = –40°C to +125°C, V_{IC} = 0 to V_{DD}	63			
			V_{IC} = 0 to V_{DD} − 1.35 V	67	84		
			At T_A = –40°C to +125°C, V_{IC} = 0 to V_{DD} − 1.35 V	66			
A_{VD}	Large-signal differential voltage amplification	V_{DD} = 2.7 V, $V_{O(PP)}$ = V_{DD}/2, R_L = 10 kΩ		98	106		dB
			At T_A = –40°C to +125°C	76			
		V_{DD} = 5 V, $V_{O(PP)}$ = V_{DD}/2, R_L = 10 kΩ		100	110		
			At T_A = –40°C to +125°C	86			
		V_{DD} = 15 V, $V_{O(PP)}$ = V_{DD}/2, R_L = 10 kΩ		81	83		
			At T_A = –40°C to +125°C	79			
INPUT CHARACTERISTICS							
I_{OS}	Input offset current	V_{DD} = 15 V, V_{IC} = V_O = V_{DD}/2			1	60	pA
			At T_A = 70°C			100	
			At T_A = 125°C			1000	
I_B	Input bias current	V_{DD} = 15 V, V_{IC} = V_O = V_{DD}/2			1	60	pA
			At T_A = 70°C			100	
			At T_A = 125°C			1000	
	Differential input resistance				1000		GΩ
	Common-mode input capacitance	f = 21 kHz			8		pF

Copyright © 2001–2016, Texas Instruments Incorporated

Electrical Characteristics (continued)

at T_A = 25°C, V_{DD} = 2.7 V, 5 V, and 15 V (unless otherwise noted).

PARAMETER	TEST CONDITIONS	MIN	TYP	MAX	UNIT
OUTPUT CHARACTERISTICS					

Electrical Characteristics (continued)

at T_A = 25°C, V_{DD} = 2.7 V, 5 V, and 15 V (unless otherwise noted).

PARAMETER		TEST CONDITIONS		MIN	TYP	MAX	UNIT
V_{OH}	High-level output voltage	V_{DD} = 2.7 V	At T_A = 25°C, V_{IC} = V_{DD}/2, I_{OH} = −1 mA	2.55	2.58		V
			At T_A = –40°C to +125°C, V_{IC} = V_{DD}/2, I_{OH} = −1 mA	2.48			
		V_{DD} = 5 V	At T_A = 25°C, V_{IC} = V_{DD}/2, I_{OH} = −1 mA	4.9	4.93		
			At T_A = –40°C to +125°C, V_{IC} = V_{DD}/2, I_{OH} = −1 mA	4.85			
		V_{DD} = 15 V	At T_A = 25°C, V_{IC} = V_{DD}/2, I_{OH} = −1 mA	14.92	14.96		
			At T_A = –40°C to +125°C, V_{IC} = V_{DD}/2, I_{OH} = −1 mA	14.9			
		V_{DD} = 2.7 V	At T_A = 25°C, V_{IC} = V_{DD}/2, I_{OH} = −5 mA	1.9	2		
			At T_A = –40°C to +125°C, V_{IC} = V_{DD}/2, I_{OH} = −5 mA	1.6			
		V_{DD} = 5 V	At T_A = 25°C, V_{IC} = V_{DD}/2, I_{OH} = −5 mA	4.6	4.68		
			At T_A = –40°C to +125°C, V_{IC} = V_{DD}/2, I_{OH} = −5 mA	4.5			
		V_{DD} = 15 V	At T_A = 25°C, V_{IC} = V_{DD}/2, I_{OH} = −5 mA	14.7	14.8		
			At T_A = –40°C to +125°C, V_{IC} = V_{DD}/2, I_{OH} = −5 mA	14.6			
V_{OL}	Low-level output voltage	V_{DD} = 2.7 V	At T_A = 25°C, V_{IC} = V_{DD}/2, I_{OL} = 1 mA		0.1	0.15	V
			At T_A = –40°C to +125°C, V_{IC} = V_{DD}/2, I_{OL} = 1 mA			0.22	
		V_{DD} = 5 V	At T_A = 25°C, V_{IC} = V_{DD}/2, I_{OL} = 1 mA		0.05	0.1	
			At T_A = –40°C to +125°C, V_{IC} = V_{DD}/2, I_{OL} = 1 mA			0.15	
		V_{DD} = 15 V	At T_A = 25°C, V_{IC} = V_{DD}/2, I_{OL} = 1 mA		0.05	0.08	
			At T_A = –40°C to +125°C, V_{IC} = V_{DD}/2, I_{OL} = 1 mA			0.1	
		V_{DD} = 2.7 V	At T_A = 25°C, V_{IC} = V_{DD}/2, I_{OL} = 5 mA		0.52	0.7	
			At T_A = –40°C to +125°C, V_{IC} = V_{DD}/2, I_{OL} = 5 mA			1.1	
		V_{DD} = 5 V	At T_A = 25°C, V_{IC} = V_{DD}/2, I_{OL} = 5 mA		0.28	0.4	
			At T_A = –40°C to +125°C, V_{IC} = V_{DD}/2, I_{OL} = 5 mA			0.5	

Copyright © 2001–2016, Texas Instruments Incorporated

Electrical Characteristics (continued)

at T_A = 25°C, V_{DD} = 2.7 V, 5 V, and 15 V (unless otherwise noted)

PARAMETER		TEST CONDITIONS		MIN	TYP	MAX	UNIT
		At T_A = 25°C, V_{IC} = V_{DD}/2, I_{OL} = 5 mA			0.19	0.3	
		V_{DD} = 15 V	At T_A = –40°C to +125°C, V_{IC} = V_{DD}/2, I_{OL} = 5 mA			0.35	
I_O	Output current	V_{DD} = 2.7 V, V_O = 0.5 V from rail	Positive rail		4		mA
			Negative rail		5		
		V_{DD} = 5 V, V_O = 0.5 V from rail	Positive rail		7		
			Negative rail		8		
		V_{DD} = 15 V, V_O = 0.5 V from rail	Positive rail		16		
			Negative rail		15		

Copyright © 2001–2016, Texas Instruments Incorporated

Electrical Characteristics (continued)

at T_A = 25°C, V_{DD} = 2.7 V, 5 V, and 15 V (unless otherwise noted).

PARAMETER		TEST CONDITIONS		MIN	TYP	MAX	UNIT
POWER SUPPLY							
I_{DD}	Supply current (per channel)	V_{DD} = 2.7 V, V_O = V_{DD}/2			470	560	µA
		V_{DD} = 5 V, V_O = V_{DD}/2			550	660	
		V_{DD} = 15 V, V_O = V_{DD}/2	At T_A = 25°C		750	900	
			At T_A = –40°C to +125°C			1200	
PSRR	Power-supply rejection ratio ($\Delta V_{DD}/\Delta V_{IO}$)	V_{DD} = 2.7 V to 15 V, V_{IC} = V_{DD}/2, no load	At T_A = 25°C	70	80		dB
			At T_A = –40°C to +125°C	65			
DYNAMIC PERFORMANCE							
UGBW	Unity gain bandwidth	V_{DD} = 2.7 V	R_L = 2 kΩ, C_L = 10 pF		2.4		MHz
		V_{DD} = 5 V to 15 V	R_L = 2 kΩ, C_L = 10 pF		3		
SR	Slew rate at unity gain	V_{DD} = 2.7 V	At T_A = 25°C, $V_{O(PP)}$ = V_{DD}/2, C_L = 50 pF, R_L = 10 kΩ	1.4	2		V/µs
			At T_A = –40°C to +125°C, $V_{O(PP)}$ = V_{DD}/2, C_L = 50 pF, R_L = 10 kΩ	1			
		V_{DD} = 5 V	At T_A = 25°C, $V_{O(PP)}$ = V_{DD}/2, C_L = 50 pF, R_L = 10 kΩ	1.6	2.4		
			At T_A = –40°C to +125°C, $V_{O(PP)}$ = V_{DD}/2, C_L = 50 pF, R_L = 10 kΩ	1.2			
		V_{DD} = 15 V	At T_A = 25°C, $V_{O(PP)}$ = V_{DD}/2, C_L = 50 pF, R_L = 10 kΩ	1.9	2.1		
			At T_A = –40°C to +125°C, $V_{O(PP)}$ = V_{DD}/2, C_L = 50 pF, R_L = 10 kΩ	1.4			
φm	Phase margin	R_L = 2 kΩ, C_L = 100 pF			65		°
	Gain margin	R_L = 2 kΩ, C_L = 10 pF			18		dB
t_s	Settling time	V_{DD} = 2.7 V, $V_{(STEP)PP}$ = 1 V, A_V = −1, C_L = 10 pF, R_L = 2 kΩ, 0.1%			2.9		µs
		V_{DD} = 5 V, 15 V, $V_{(STEP)PP}$ = 1 V, A_V = −1, C_L = 47 pF, R_L = 2 kΩ, 0.1%			2		

Copyright © 2001–2016, Texas Instruments Incorporated

Electrical Characteristics (continued)

at T_A = 25°C, V_{DD} = 2.7 V, 5 V, and 15 V (unless otherwise noted).

PARAMETER		TEST CONDITIONS		MIN	TYP	MAX	UNIT
NOISE, DISTORTION PERFORMANCE							
THD + N	Total harmonic distortion plus noise	V_{DD} = 2.7 V	$V_{O(PP)}$= V_{DD}/2 V, R_L = 2 kΩ, f = 10 kHz, A_V = 1		0.02%		
			$V_{O(PP)}$= V_{DD}/2 V, R_L = 2 kΩ, f = 10 kHz, A_V = 10		0.05%		
			$V_{O(PP)}$= V_{DD}/2 V, R_L = 2 kΩ, f = 10 kHz, A_V = 100		0.18%		
		V_{DD} = 5 V, 15 V	$V_{O(PP)}$= V_{DD}/2 V, R_L = 2 kΩ, f = 10 kHz, A_V = 1		0.02%		
			$V_{O(PP)}$= V_{DD}/2 V, R_L = 2 kΩ, f = 10 kHz, A_V = 10		0.09%		
			$V_{O(PP)}$= V_{DD}/2 V, R_L = 2 kΩ, f = 10 kHz, A_V = 100		0.5%		
V_n	Equivalent input noise voltage	f = 1 kHz			39		nV/√Hz
		f = 10 kHz			35		
I_n	Equivalent input noise current	f = 1 kHz			0.6		fA/√Hz
SHUTDOWN CHARACTERISTICS							
$I_{DD(SHDN)}$	Supply current in shutdown mode (TLV2370, TLV2373, TLV2375) (per channel)	V_{DD} = 2.7 V, 5 V, $\overline{SHDN}$ = 0 V	At T_A = 25°C		25	30	µA
			At T_A = –40°C to +125°C			35	
		V_{DD} = 15 V, $\overline{SHDN}$ = 0 V	At T_A = 25°C		40	45	
			At T_A = –40°C to +125°C			50	
$t_{(on)}$	Amplifier turnon time (1)	R_L = 2 kΩ			0.8		µs
$t_{(off)}$	Amplifier turnoff time (1)	R_L = 2 kΩ			1		µs

(1) Disable time and enable time are defined as the interval between application of the logic signal to the SHDN terminal and the point at which the supply current has reached one half of its final value.

Copyright © 2001–2016, Texas Instruments Incorporated

8 Typical Characteristics

Table 3. Table of Graphs

			FIGURE
V_{IO}	Input offset voltage	vs Common-mode input voltage	Figure 1, Figure 2, Figure 3
CMRR	Common-mode rejection ratio	vs Frequency	Figure 4
	Input bias and offset current	vs Free-air temperature	Figure 5
V_{OL}	Low-level output voltage	vs Low-level output current	Figure 6, Figure 8, Figure 10
V_{OH}	High-level output voltage	vs High-level output current	Figure 7, Figure 9, Figure 11
$V_{O(PP)}$	Peak-to-peak output voltage	vs Frequency	Figure 12
I_{DD}	Supply current	vs Supply voltage	Figure 13
PSRR	Power supply rejection ratio	vs Frequency	Figure 14
A_{VD}	Differential voltage gain and phase	vs Frequency	Figure 15
	Gain-bandwidth product	vs Free-air temperature	Figure 16
SR	Slew rate	vs Supply voltage	Figure 17
		vs Free-air temperature	Figure 18
φm	Phase margin	vs Capacitive load	Figure 19
V_n	Equivalent input noise voltage	vs Frequency	Figure 20
	Voltage-follower large-signal pulse response		Figure 21, Figure 22
	Voltage-follower small-signal pulse response		Figure 23
	Inverting large-signal response		Figure 24, Figure 25
	Inverting small-signal response		Figure 26
	Crosstalk	vs Frequency	Figure 27
	Shutdown forward & reverse isolation	vs Frequency	Figure 28
$I_{DD(SHDN)}$	Shutdown supply current	vs Supply voltage	Figure 29
$I_{DD(SHDN)}$	Shutdown pin leakage current	vs Shutdown pin voltage	Figure 30
$I_{DD(SHDN)}$	Shutdown supply current, output voltage	vs Time	Figure 31, Figure 32

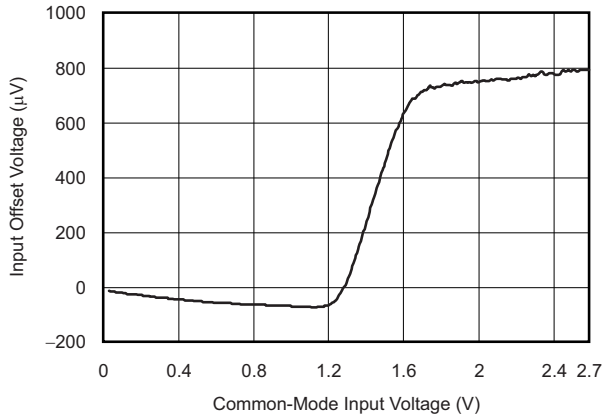

Figure 1. Input Offset Voltage vs Common-Mode Input Voltage

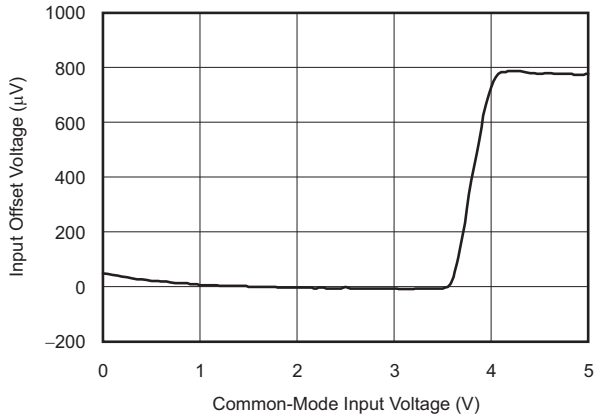

Figure 2. Input Offset Voltage vs Common-Mode Input Voltage

Copyright © 2001–2016, Texas Instruments Incorporated

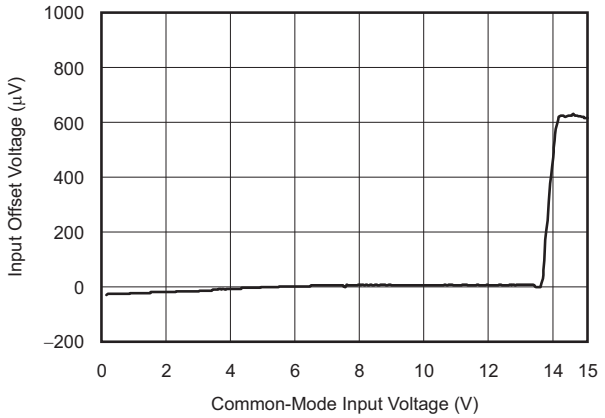

Figure 3. Input Offset Voltage vs Common-Mode Input Voltage

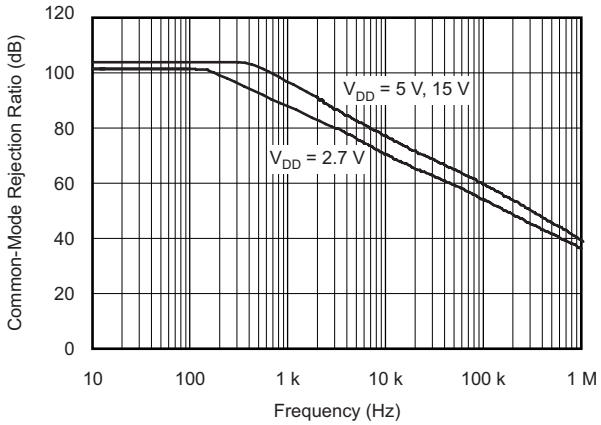

Figure 4. Common-Mode Rejection Ratio vs Frequency

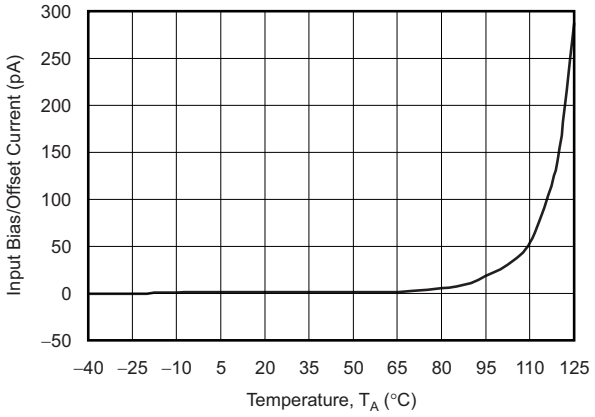

Figure 5. Input Bias or Offset Current vs Free-Air Temperature

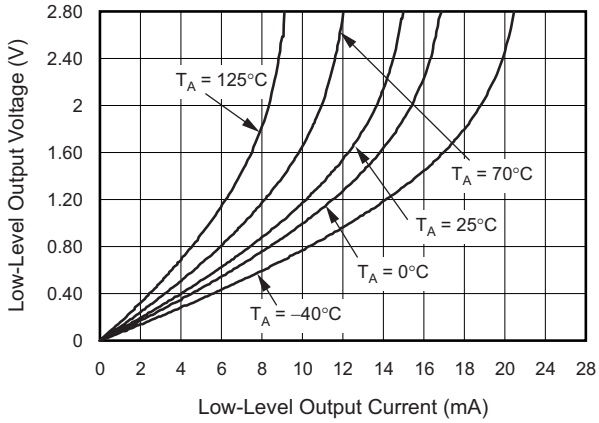

Figure 6. Low-Level Output Voltage vs Low-Level Output Current

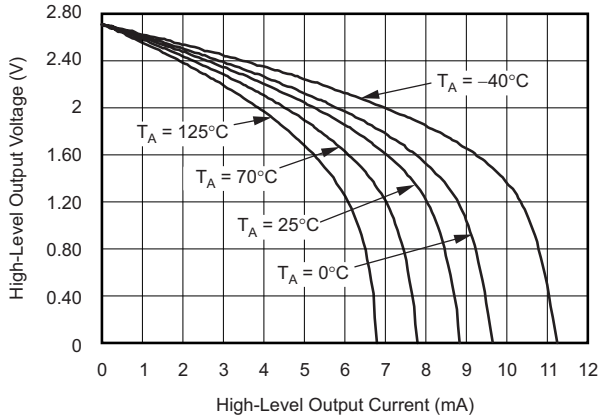

Figure 7. High-Level Output Voltage vs High-Level Output Current

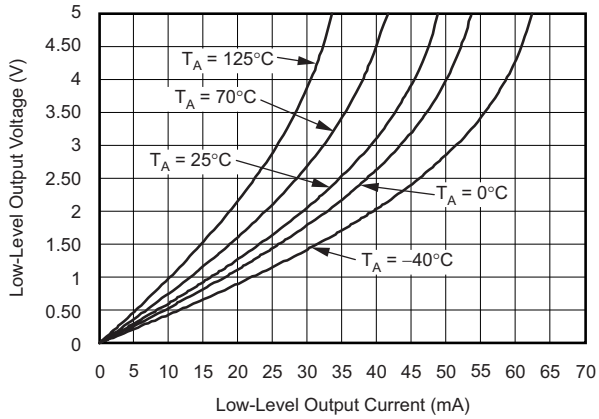

Figure 8. Low-Level Output Voltage vs Low-Level Output Current

Copyright © 2001–2016, Texas Instruments Incorporated

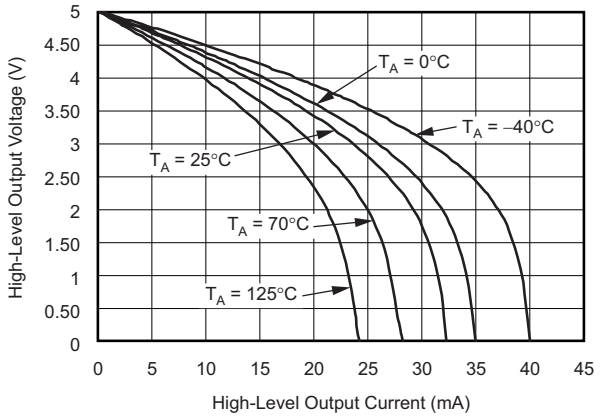

Figure 9. High-Level Output Voltage vs High-Level Output Current

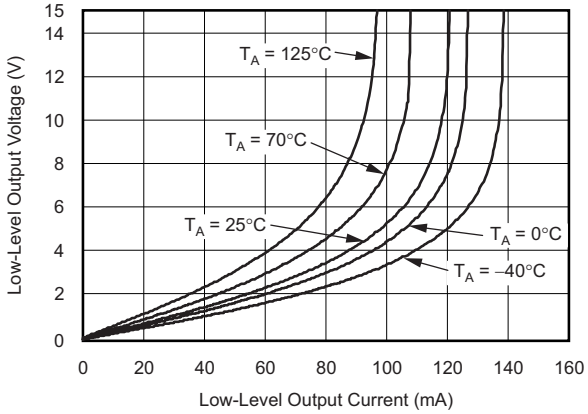

Figure 10. Low-Level Output Voltage vs Low-Level Output Current

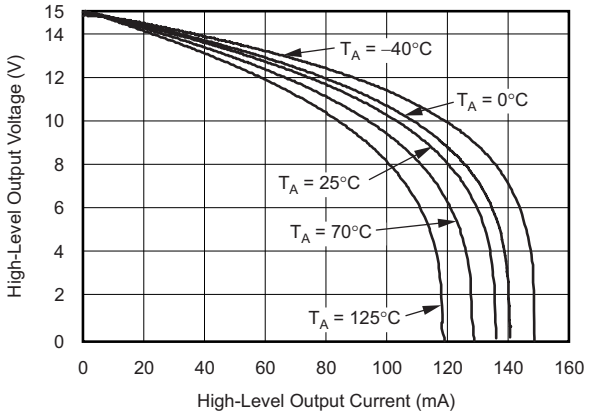

Figure 11. High-Level Output Voltage vs High-Level Output Current

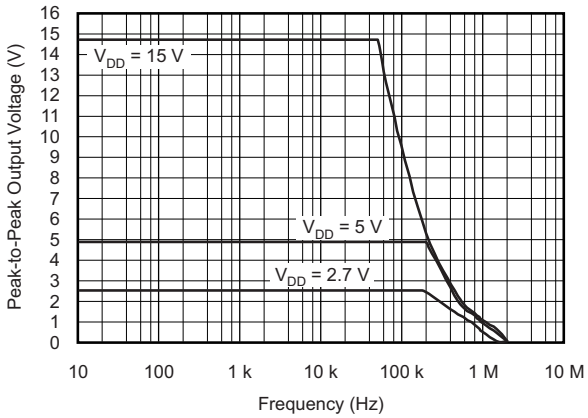

Figure 12. Peak-to-Peak Output Voltage vs Frequency

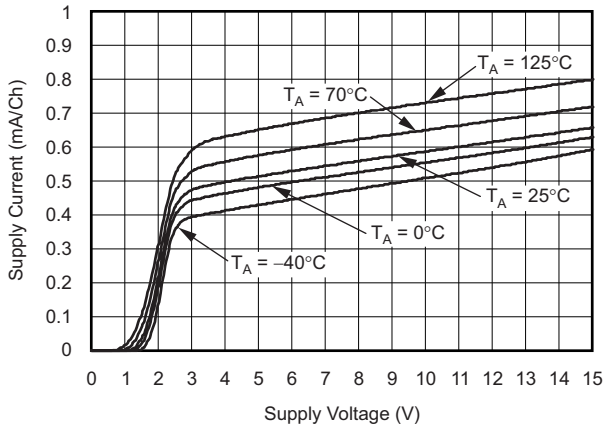

Figure 13. Supply Current vs Supply Voltage

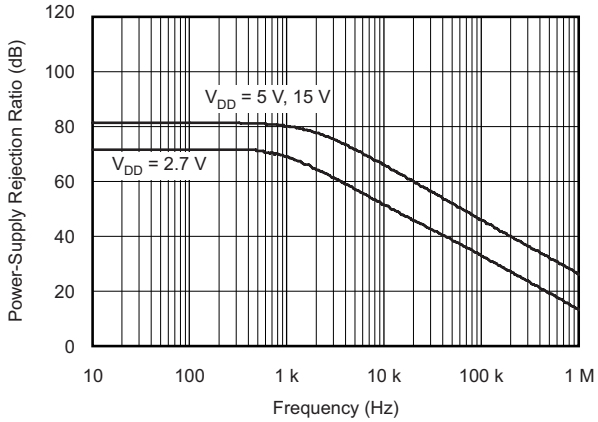

Figure 14. Power Supply Rejection Ratio vs Frequency

Copyright © 2001–2016, Texas Instruments Incorporated

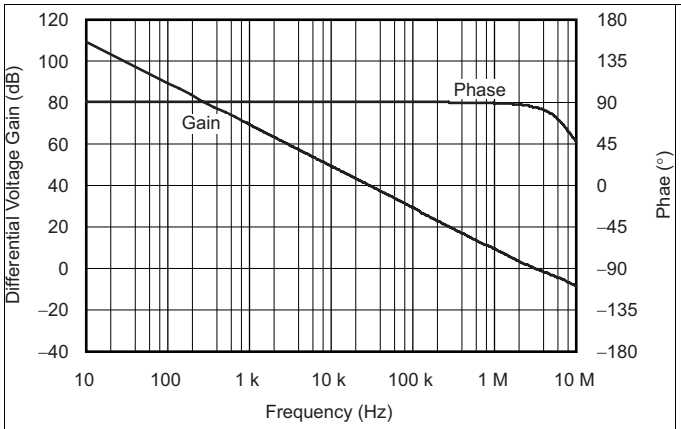

Figure 15. Differential Voltage Gain and Phase vs Frequency

Figure 16. Gain Bandwidth Product vs Free-Air Temperature

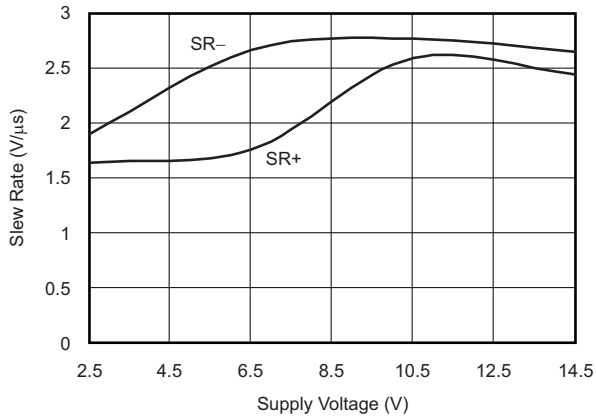

Figure 17. Slew Rate vs Supply Voltage

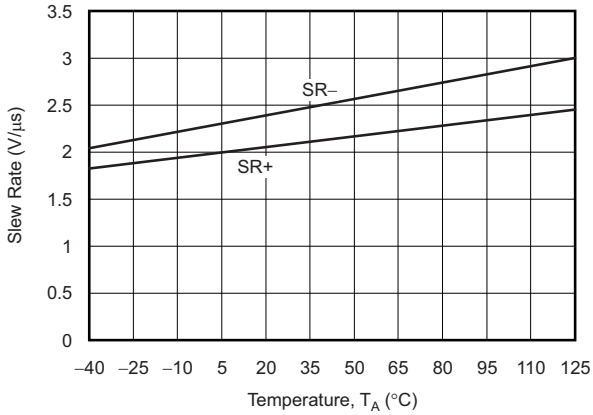

Figure 18. Slew Rate vs Free-Air Temperature

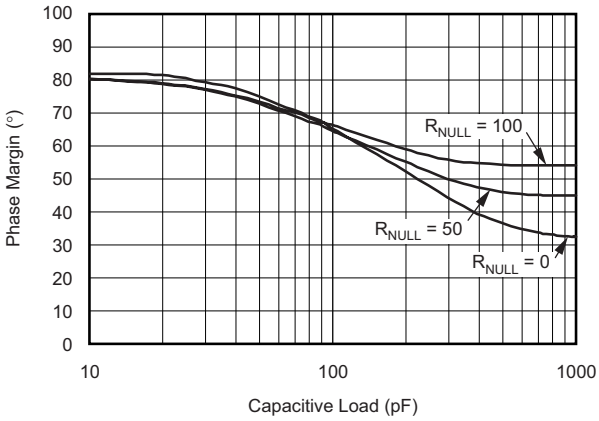

Figure 19. Phase Margin vs Capacitive Load

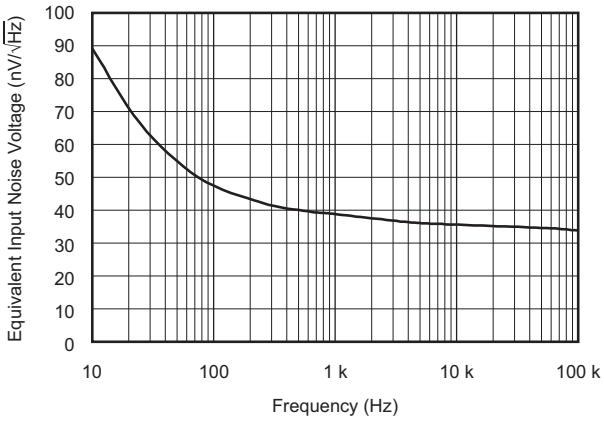

Figure 20. Equivalent Input Noise Voltage vs Frequency

Copyright © 2001–2016, Texas Instruments Incorporated

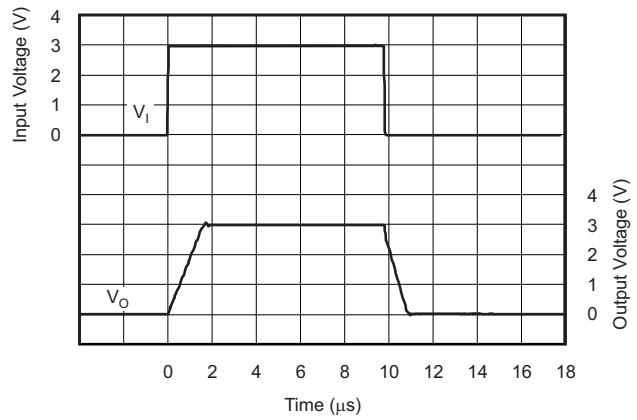

Figure 21. Voltage-Follower Large-Signal Pulse Response

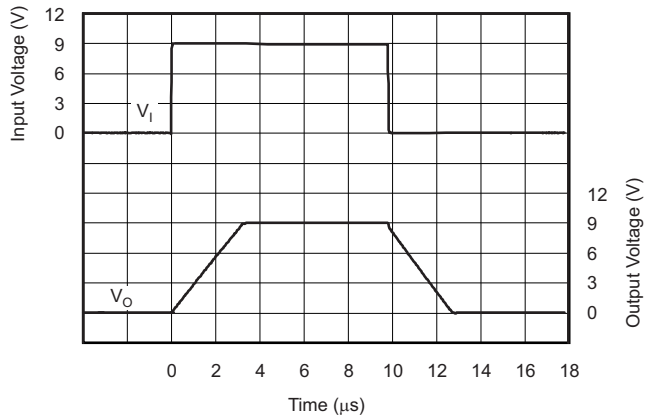

Figure 22. Voltage-Follower Large-Signal Pulse Response

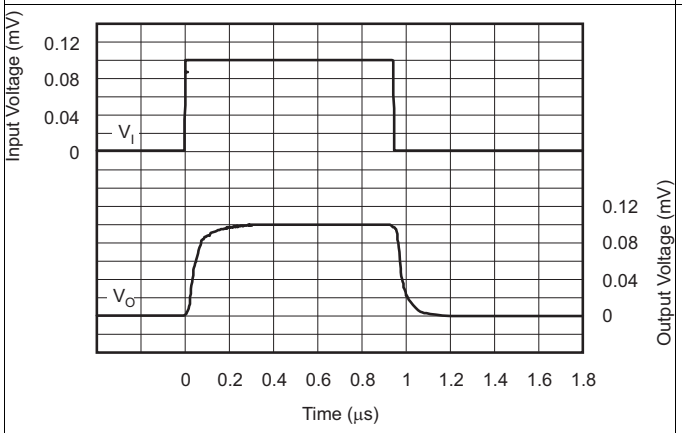

Figure 23. Voltage-Follower Small-Signal Pulse Response

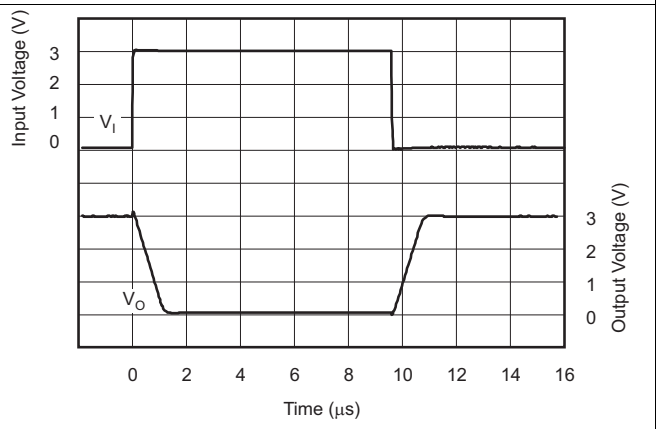

Figure 24. Inverting Large-Signal Response

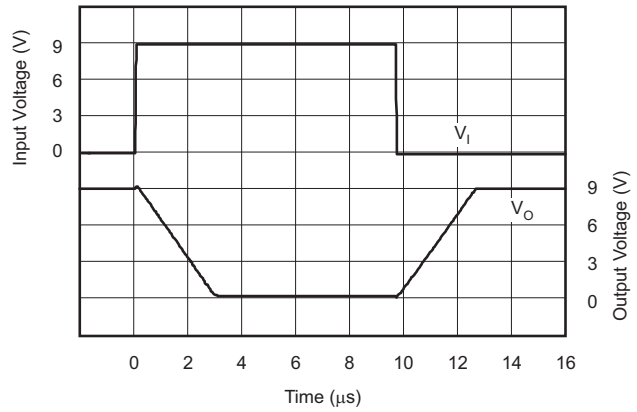

Figure 25. Inverting Large-Signal Response

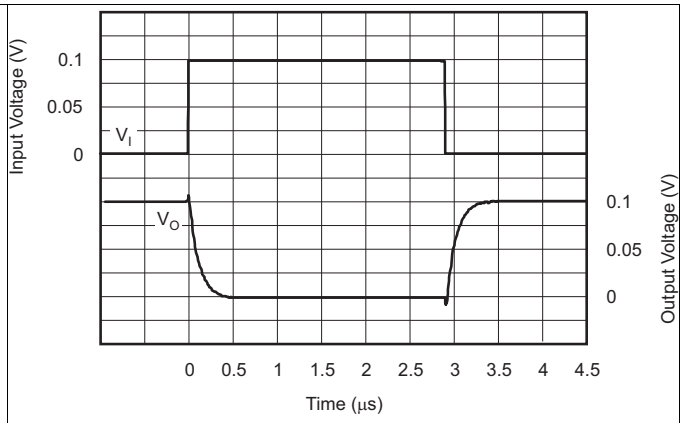

Figure 26. Inverting Small-Signal Response

Copyright © 2001–2016, Texas Instruments Incorporated

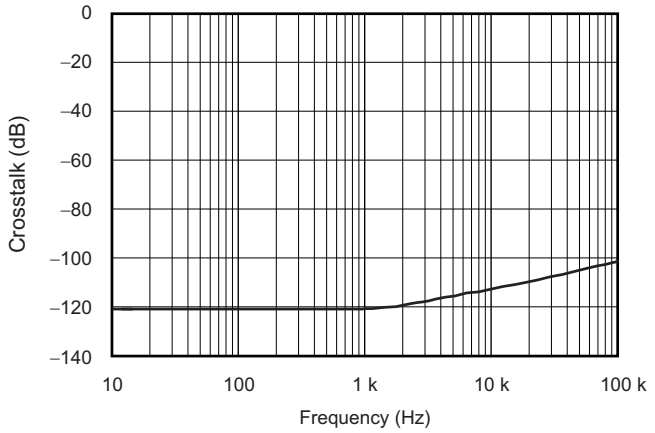

Figure 27. Crosstalk vs Frequency

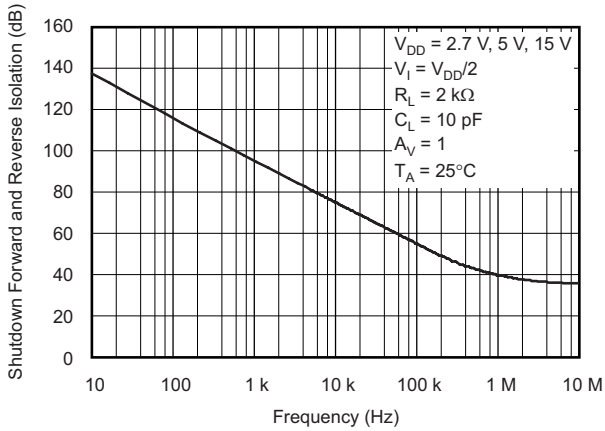

Figure 28. Shutdown Forward and Reverse Isolation vs Frequency

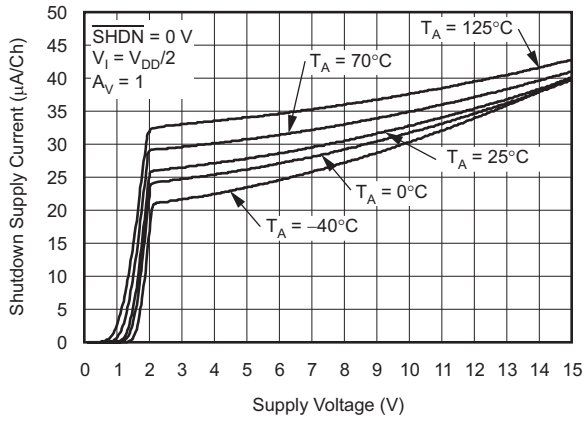

Figure 29. Shutdown Supply Current vs Supply Voltage

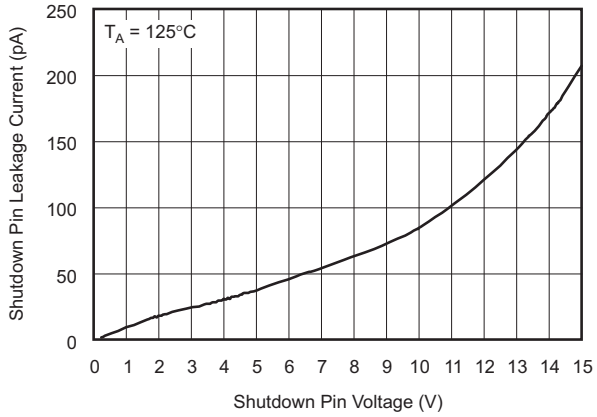

Figure 30. Shutdown Pin Leakage Current vs Shutdown Pin Voltage

Copyright © 2001–2016, Texas Instruments Incorporated

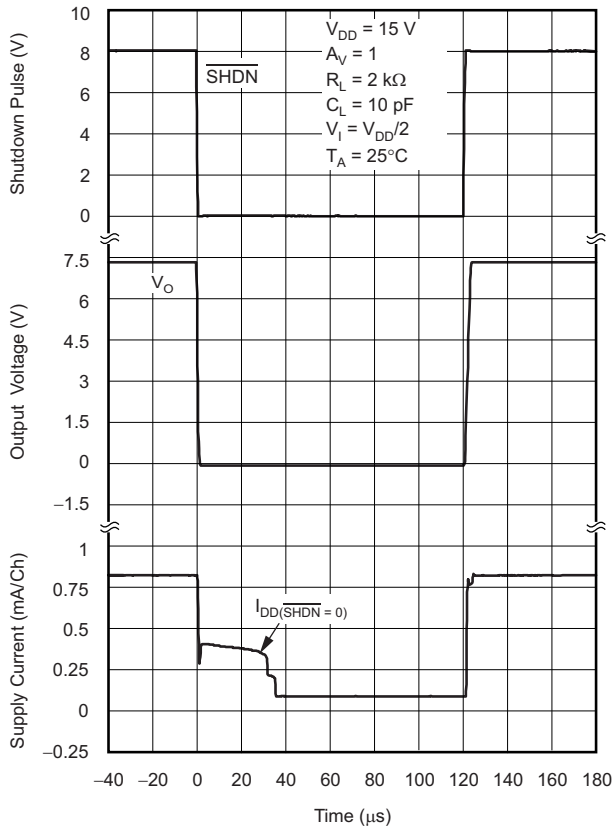

Figure 31. Shutdown Supply Current and Output Voltage vs Time

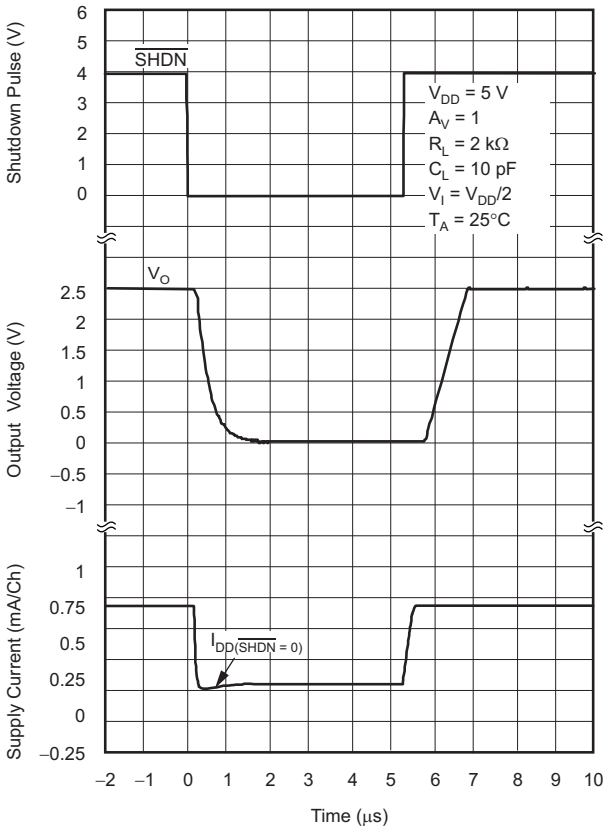

Figure 32. Shutdown Supply Current/output Voltage vs Time

Copyright © 2001–2016, Texas Instruments Incorporated

9 Detailed Description

9.1 Overview

The TLV237x single-supply CMOS operational amplifiers provide rail-to-rail input and output capability with 3-MHz bandwidth. Consuming 550 μA, the TLV237x is designed for portable and battery-operated applications. The maximum recommended supply voltage is 16 V, which allows the devices to operate from (±8-V supplies down to ±1.35 V) a variety of rechargeable cells . The rail-to-rail inputs with high input impedance make the TLV237x an option for sensor signal-conditioning applications.

9.2 Functional Block Diagram

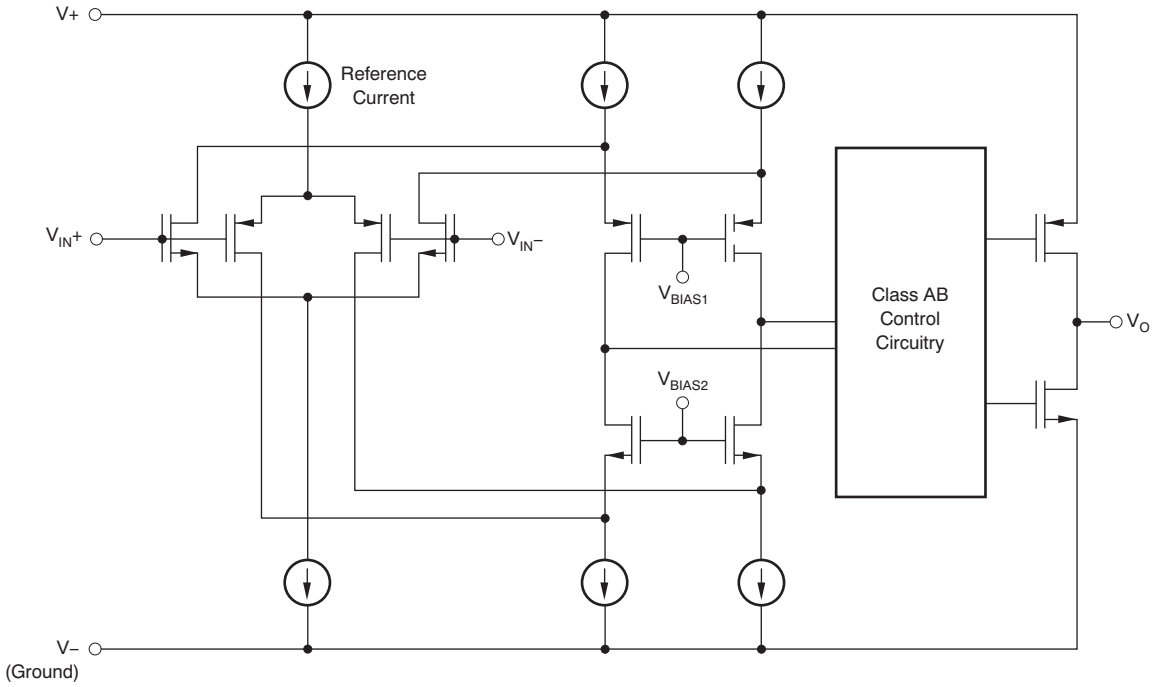

9.3 Feature Description

9.3.1 Rail-to-Rail Input Operation

The TLV237x input stage consists of two differential transistor pairs (NMOS and PMOS) that operate together to achieve rail-to-rail input operation. The transition point between these two pairs are shown in Figure 1, Figure 2, and Figure 3 for a 2.7-V, 5-V, and 15-V supply. As the common-mode input voltage approaches the positive supply rail, the input pair switches from the PMOS differential pair to the NMOS differential pair. This transition occurs approximately 1.35 V from the positive rail and results in a change in offset voltage due to different device characteristics between the NMOS and PMOS pairs. If the input signal to the device is large enough to swing between both rails, this transition results in a reduction in common-mode rejection ratio (CMRR). If the input signal does not swing between both rails, bias the signal in the region where only one input pair is active. This is the region in Figure 1 and Figure 3 where the offset voltage varies slightly across the input range and optimal CMRR can be achieved. This has the greatest impact when operating from a 2.7-V supply voltage.

9.3.2 Driving a Capacitive Load

When the amplifier is configured in this manner, capacitive loading directly on the output decreases the device phase margin leading to high frequency ringing or oscillations. Therefore, for capacitive loads of greater than 10 pF, TI recommends placing a resistor in series (R_{NULL}) with the output of the amplifier, as shown in Figure 33. A minimum value of 20 Ω works well for most applications.

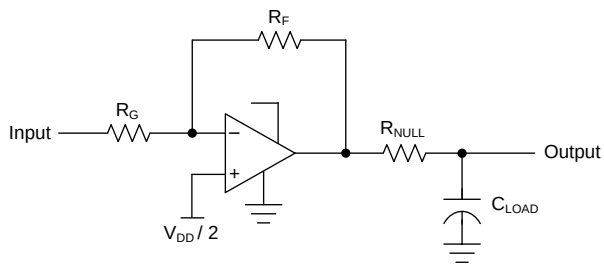

Figure 33. Driving a Capacitive Load

9.3.3 Offset Voltage

The output offset voltage (VOO) is the sum of the input offset voltage (VIO) and input bias currents (IIB) times the corresponding gains. Figure 34 ~~!~ can be~~!~ is used to calculate the output offset voltage. Note that this does not include other parameters that can affect the offset voltage, such as PSRR and CMRR.

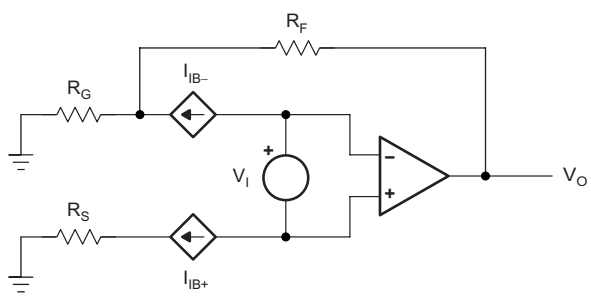

$$V_{OO} = V_{IO}\left(1 + \left(\frac{R_F}{R_G}\right)\right) \pm I_{IB+} R_S\left(1 + \left(\frac{R_F}{R_G}\right)\right) \pm I_{IB-} R_F$$

Figure 34. Output Offset Voltage Model

Copyright © 2001–2016, Texas Instruments Incorporated

Feature Description (continued)

9.3.4 General Configurations

When receiving low-level signals, limiting the bandwidth of the incoming signals into the system is often required. ~~!~ The simplest way to accomplish this is to place an RC filter at the noninverting terminal~~!~ To accomplish this, place an RC filter at the noninverting terminal (see Figure 35).

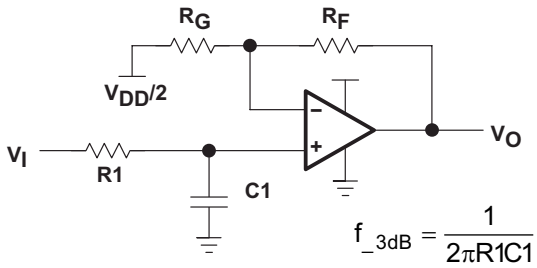

$$f_{-3dB} = \frac{1}{2\pi R1C1}$$

$$\frac{V_O}{V_I} = \left(1 + \frac{R_F}{R_G}\right)\left(\frac{1}{1 + 2\pi fR1C1}\right)$$

Figure 35. Single-Pole Low-Pass Filter

If even more attenuation is required, a multiple pole filter is required. The Sallen-key filter ~~!~ can be~~!~ is used for this task. For best results, the amplifier must have a bandwidth that is eight to 10 times the filter frequency bandwidth. Failure to do this ~~!~ can result~~!~ results in phase shift of the amplifier.

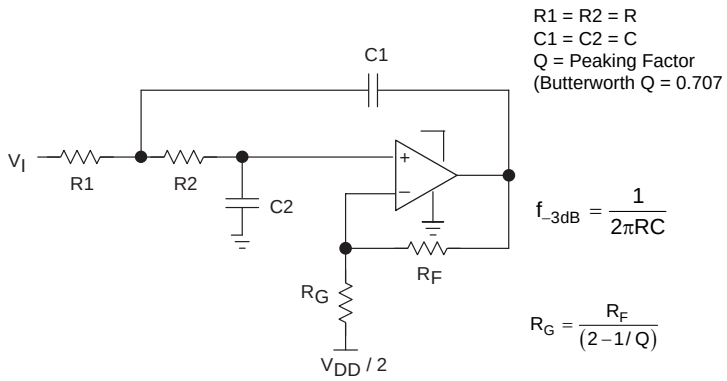

$$f_{-3dB} = \frac{1}{2\pi RC}$$

$$R_G = \frac{R_F}{(2 - 1/Q)}$$

Figure 36. 2-Pole, Low-Pass, Sallen-Key Filter

9.3.5 Shutdown Function

Three members of the TLV237x family (TLV2370, TLV2373, and TLV2375) have a shutdown terminal for conserving battery life in portable applications. When the shutdown terminal is tied low, the supply current is reduced to 25 μA/channel, the amplifier is disabled, and the outputs are placed in a high impedance mode. To enable the amplifier, the shutdown terminal can either be left floating or pulled high. When the shutdown terminal is left floating, take care to ensure that parasitic leakage current at the shutdown terminal does not inadvertently place the operational amplifier into shutdown.

9.4 Device Functional Modes

The TLV2371, TLV2372, and TLV2374 have a single functional mode. These devices are operable as long as the power-supply voltage is between 2.7 V (±1.35 V) and 16 V (±8 V).

The TLV2370, TLV2373, and TLV2375 are likewise operational as long as the power-supply voltage is between 2.7 V (±1.35 V) and 16 V (±8 V), additionally these devices also have a shutdown capability. When the shutdown control pin is driven below 0.8 V above ground, the device is in shutdown. If the shutdown control pin voltage is driven to greater than 2 V above ground, the device is in its normal operating mode. See *Shutdown Function* for additional information regarding shutdown operation.

Copyright © 2001–2016, Texas Instruments Incorporated

10 Application and Implementation

NOTE

Information in the following applications sections is not part of the TI component specification, and TI does not warrant its accuracy or completeness. TI's customers are responsible for determining suitability of components for their purposes. Customers should validate and test their design implementation to confirm system functionality.

10.1 Application Information

When designing for low power, choose system components carefully. To minimize current consumption, select large-value resistors. Any resistors react with stray capacitance in the circuit and the input capacitance of the operational amplifier. These parasitic RC combinations affect the stability of the overall system. Use of a feedback capacitor assures stability and limits overshoot or gain peaking.

10.2 Typical Application

A typical application for an operational amplifier is an inverting amplifier, as Figure 37 shows. An inverting amplifier takes a positive voltage on the input and outputs a signal inverted to the input, ~~!~ making~~!~ which results in a negative voltage of the same magnitude. In the same manner, the amplifier makes negative input voltages positive on the output. ~~!~ In addition, amplification can be added by selecting~~!~ Select the input resistor (R_I) and the feedback resistor (R_F!~ to add amplification.)

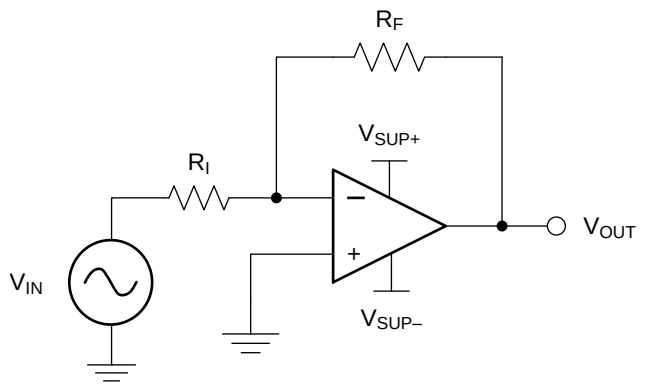

Copyright © 2017, Texas Instruments Incorporated

Figure 37. Application Schematic

Copyright © 2001–2016, Texas Instruments Incorporated

Typical Application (continued)

10.2.1 Design Requirements

The selected supply voltage must be larger than the input voltage range and the desired output range. Consider the limits of the input common-mode range (V_{CM}) and the output voltage swing to the rails (V_O) . For example, this application scales a signal of ±0.5 V (1 V) to ±1.8 V (3.6 V). Setting the supply at ±2.5 V is sufficient to accommodate this application.

10.2.2 Detailed Design Procedure

Determine the gain required by the inverting amplifier using Equation 1 and Equation 2:

$$A_V = \frac{V_{OUT}}{V_{IN}} \tag{1}$$

$$A_V = \frac{1.8}{-0.5} = -3.6 \tag{2}$$

When the desired gain is determined, choose a value for R_I or R_F. Choosing a value in the kΩ range is desirable for general-purpose applications because the amplifier circuit uses currents in the milliamp range. This milliamp current range ensures the device does not draw too much current. The trade-off is that very large resistors (100s of kΩ) draw the smallest current but generate the highest noise. Very small resistors (100s of Ω) generate low noise but draw high current. This example uses 10 kΩ for R_I, meaning 36 kΩ is used for R_F. These values are determined by Equation 3:

$$A_V = -\frac{R_F}{R_I} \tag{3}$$

10.2.3 Application Curve

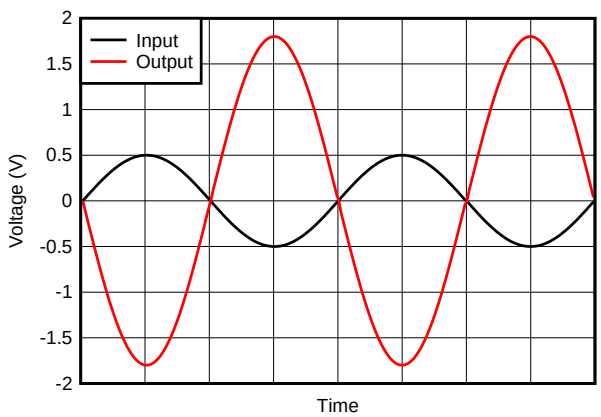

Figure 38. Inverting Amplifier Input and Output

11 Power Supply Recommendations

The TLV237x family is specified for operation from 2.7 V to 16 V (±1.35 V to ±8 V); many specifications apply from –40°C to +125°C. The *Typical Characteristics* presents parameters that can exhibit significant variance with regard to operating voltage or temperature.

CAUTION

Supply voltages larger than 16 V can permanently damage the device (see the *Absolute Maximum Ratings* table).

Place 0.1-µF bypass capacitors close to the power-supply pins to reduce errors coupling in from noisy or high-impedance power supplies. For more detailed information on bypass capacitor placement, see *Layout*.

12 Layout

12.1 Layout Guidelines

To achieve the levels of high performance of the TLV237x , follow proper printed-circuit board design techniques. A general set of guidelines is shown in the following list:

- Ground planes: TI highly recommends using a ground plane on the board to provide all components with a low inductive ground connection. However, in the areas of the amplifier inputs and output, the ground plane can be removed to minimize the stray capacitance.
- Proper power supply decoupling: Use a 6.8-µF tantalum capacitor in parallel with a 0.1-µF ceramic capacitor on each supply ~~!~ terminal~~!~ pin. It may be possible to share the tantalum among several amplifiers depending on the application!~.~~!~ , !~ but a 0.1-µF ceramic capacitor must always be used on the supply terminal of every amplifier~~!~ Always use a 0.1-µF ceramic capacitor on the supply pin of every amplifier. In addition, the 0.1-µF capacitor must be placed as close!~ to the supply pin as possible. ~~!~ as possible to the supply terminal.~~ As this distance increases, the inductance in the connecting trace makes the capacitor less effective. The designer must strive for distances of less than 0.1 inches between the device power ~~!~ terminals~~!~ pins and the ceramic capacitors.
- Sockets: Sockets can be used but are not recommended. The additional lead inductance in the socket pins often lead to stability problems.~~!~ Surface-mount packages soldered directly to the printed-circuit board is the best implementation~~!~ For best results, solder the surface mount packages directly to the printed circuit board.
- Short trace runs and compact part placements: Optimum high performance is achieved when stray series inductance are minimized. To realize this, the circuit layout must be made as compact as possible, which minimizes the length of all trace runs. Pay particular attention to the inverting input of the amplifier. The length of the inverting input must be kept as short as possible. This helps to minimize stray capacitance at the input of the amplifier.
- Surface-mount passive components: Using surface-mount passive components is recommended for high performance amplifier circuits for several reasons. First, because of the low lead inductance of surface-mount components, the problem with stray series inductance is reduced. Second, the small size of surface-mount components naturally leads to a more compact layout, which minimizes stray inductance and capacitance. TI recommends that lead lengths are kept as short as possible if leaded components are used.

Copyright © 2001–2016, Texas Instruments Incorporated

12.2 Layout Example

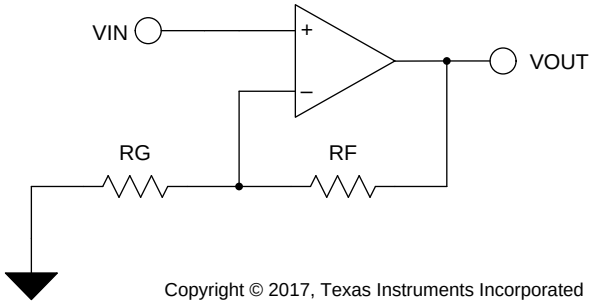

Figure 39. Schematic Representation

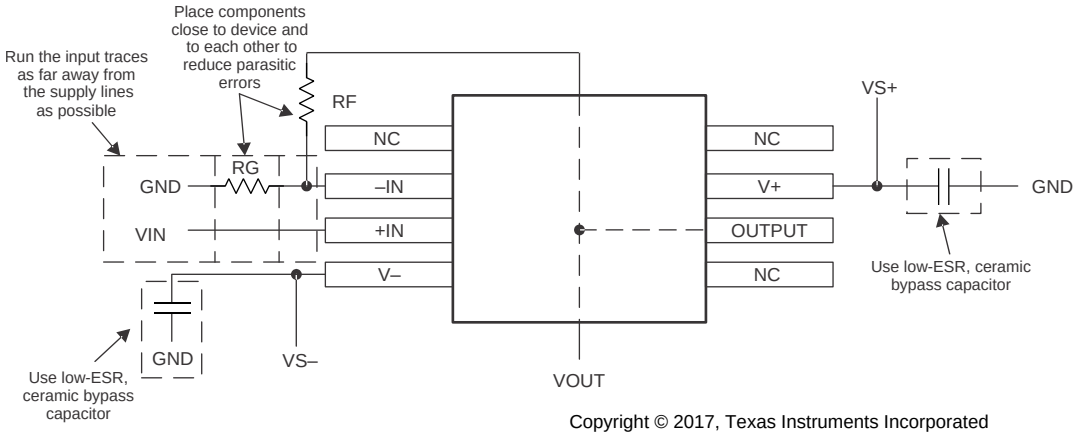

Figure 40. Operational Amplifier Board Layout for Noninverting Configuration

12.3 Power Dissipation Considerations

For a given θ_{JA} value, the maximum power dissipation is shown in Figure 41 and is calculated by Equation 4:

$$P_D = \left(\frac{T_{MAX} - T_A}{\theta_{JA}}\right)$$

where

- P_D = Maximum power dissipation of TLV237x IC (watts)
- T_{MAX} = Absolute maximum junction temperature (150°C)
- T_A = Free-ambient air temperature (°C)
- $\theta_{JA} = \theta_{JC}$ (Thermal coefficient from junction to case) + θ_{CA} (Thermal coefficient from case to ambient air (°C/W)) (4)

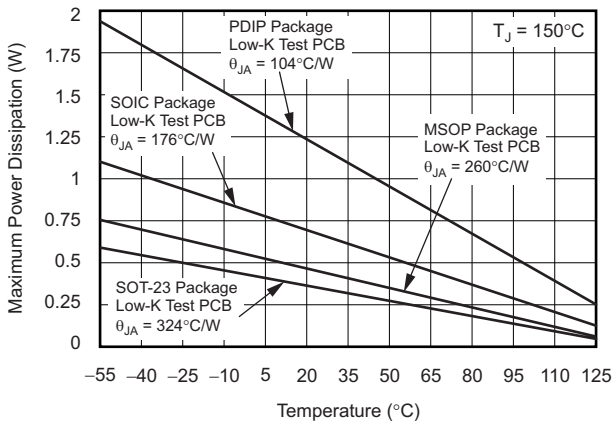

Results are with no air flow and using JEDEC Standard Low-K test PCB.

Figure 41. Maximum Power Dissipation vs Free-Air Temperature

版权 © 2001–2016, Texas Instruments Incorporated

13 器件和文档支持

13.1 文档支持

13.1.1 相关文档

如需相关文档，请参阅：

《EVM 选择指南》 (SLOU060)

13.2 相关链接

下表列出了快速访问链接。类别包括技术文档、支持和社区资源、工具和软件，以及立即购买的快速链接。

表 4. 相关链接

器件	产品文件夹	立即订购	技术文档	工具和软件	支持和社区
TLV2370	单击此处	单击此处	单击此处	单击此处	单击此处
TLV2371	单击此处	单击此处	单击此处	单击此处	单击此处
TLV2372	单击此处	单击此处	单击此处	单击此处	单击此处
TLV2373	单击此处	单击此处	单击此处	单击此处	单击此处
TLV2374	单击此处	单击此处	单击此处	单击此处	单击此处
TLV2375	单击此处	单击此处	单击此处	单击此处	单击此处

13.3 接收文档更新通知

要接收文档更新通知，请导航至 Ti.com 上的器件产品文件夹。单击右上角的*通知我* 进行注册，即可每周接收产品信息更改摘要。有关更改的详细信息，请查看任何已修订文档中包含的修订历史记录。

13.4 社区资源

下列链接提供到 TI 社区资源的连接。链接的内容由各个分销商"按照原样"提供。这些内容并不构成 TI 技术规范，并且不一定反映 TI 的观点；请参阅 TI 的 《使用条款》。

TI E2E™ 在线社区 ***TI 的工程师对工程师 (E2E) 社区。***此社区的创建目的在于促进工程师之间的协作。在 e2e.ti.com 中，您可以咨询问题、分享知识、拓展思路并与同行工程师一道帮助解决问题。

设计支持 ***TI 参考设计支持*** 可帮助您快速查找有帮助的 E2E 论坛、设计支持工具以及技术支持的联系信息。

13.5 商标

E2E is a trademark of Texas Instruments.
All other trademarks are the property of their respective owners.

13.6 静电放电警告

ESD 可能会损坏该集成电路。德州仪器 (TI) 建议通过适当的预防措施处理所有集成电路。如果不遵守正确的处理措施和安装程序，可能会损坏集成电路。

ESD 的损坏小至导致微小的性能降级，大至整个器件故障。 精密的集成电路可能更容易受到损坏，这是因为非常细微的参数更改都可能会导致器件与其发布的规格不相符。

13.7 Glossary

SLYZ022 — *TI Glossary*.

This glossary lists and explains terms, acronyms, and definitions.

14 机械、封装和可订购信息

以下页面包含机械、封装和可订购信息。这些信息是指定器件的最新可用数据。数据如有变更，恕不另行通知和修订此文档。如欲获取此数据表的浏览器版本，请参阅左侧的导航。

PACKAGING INFORMATION

Orderable part number	Status (1)	Material type (2)	Package | Pins	Package qty | Carrier	RoHS (3)	Lead finish/ Ball material (4)	MSL rating/ Peak reflow (5)	Op temp (°C)	Part marking (6)
TLV2370ID	Obsolete	Production	SOIC (D) | 8	-	-	Call TI	Call TI	-40 to 125	2370I
TLV2370IDBVR	Active	Production	SOT-23 (DBV) | 6	3000 | LARGE T&R	Yes	NIPDAU	Level-1-260C-UNLIM	-40 to 125	VBFI
TLV2370IDBVR.A	Active	Production	SOT-23 (DBV) | 6	3000 | LARGE T&R	Yes	NIPDAU	Level-1-260C-UNLIM	-40 to 125	VBFI
TLV2370IDBVR.B	Active	Production	SOT-23 (DBV) | 6	3000 | LARGE T&R	Yes	NIPDAU	Level-1-260C-UNLIM	-40 to 125	VBFI
TLV2370IDBVR1G4	Active	Production	SOT-23 (DBV) | 6	3000 | LARGE T&R	Yes	NIPDAU	Level-1-260C-UNLIM	-40 to 125	VBFI
TLV2370IDBVR1G4.A	Active	Production	SOT-23 (DBV) | 6	3000 | LARGE T&R	Yes	NIPDAU	Level-1-260C-UNLIM	-40 to 125	VBFI
TLV2370IDBVR1G4.B	Active	Production	SOT-23 (DBV) | 6	3000 | LARGE T&R	Yes	NIPDAU	Level-1-260C-UNLIM	-40 to 125	VBFI
TLV2370IDBVT	Active	Production	SOT-23 (DBV) | 6	250 | SMALL T&R	Yes	NIPDAU	Level-1-260C-UNLIM	-40 to 125	VBFI
TLV2370IDBVT.A	Active	Production	SOT-23 (DBV) | 6	250 | SMALL T&R	Yes	NIPDAU	Level-1-260C-UNLIM	-40 to 125	VBFI
TLV2370IDBVT.B	Active	Production	SOT-23 (DBV) | 6	250 | SMALL T&R	Yes	NIPDAU	Level-1-260C-UNLIM	-40 to 125	VBFI
TLV2370IDR	Active	Production	SOIC (D) | 8	2500 | LARGE T&R	Yes	NIPDAU	Level-1-260C-UNLIM	-40 to 125	2370I
TLV2370IDR.B	Active	Production	SOIC (D) | 8	2500 | LARGE T&R	Yes	NIPDAU	Level-1-260C-UNLIM	-40 to 125	2370I
TLV2370IP	Active	Production	PDIP (P) | 8	50 | TUBE	Yes	NIPDAU	N/A for Pkg Type	-40 to 125	2370I
TLV2370IP.B	Active	Production	PDIP (P) | 8	50 | TUBE	Yes	NIPDAU	N/A for Pkg Type	-40 to 125	2370I
TLV2371ID	Active	Production	SOIC (D) | 8	75 | TUBE	Yes	NIPDAU	Level-1-260C-UNLIM	-40 to 125	2371I
TLV2371ID.B	Active	Production	SOIC (D) | 8	75 | TUBE	Yes	NIPDAU	Level-1-260C-UNLIM	-40 to 125	2371I
TLV2371IDBVR	Active	Production	SOT-23 (DBV) | 5	3000 | LARGE T&R	Yes	NIPDAU	Level-1-260C-UNLIM	-40 to 125	VBGI
TLV2371IDBVR.B	Active	Production	SOT-23 (DBV) | 5	3000 | LARGE T&R	Yes	NIPDAU	Level-1-260C-UNLIM	-40 to 125	VBGI
TLV2371IDBVT	Active	Production	SOT-23 (DBV) | 5	250 | SMALL T&R	Yes	NIPDAU	Level-1-260C-UNLIM	-40 to 125	VBGI
TLV2371IDBVT.B	Active	Production	SOT-23 (DBV) | 5	250 | SMALL T&R	Yes	NIPDAU	Level-1-260C-UNLIM	-40 to 125	VBGI
TLV2371IDG4	Active	Production	SOIC (D) | 8	75 | TUBE	-	Call TI	Call TI	-40 to 125	
TLV2371IDR	Active	Production	SOIC (D) | 8	2500 | LARGE T&R	Yes	NIPDAU	Level-1-260C-UNLIM	-40 to 125	2371I
TLV2371IDR.B	Active	Production	SOIC (D) | 8	2500 | LARGE T&R	Yes	NIPDAU	Level-1-260C-UNLIM	-40 to 125	2371I
TLV2371IDRG4	Active	Production	SOIC (D) | 8	2500 | LARGE T&R	-	Call TI	Call TI	-40 to 125	
TLV2371IP	Active	Production	PDIP (P) | 8	50 | TUBE	Yes	NIPDAU	N/A for Pkg Type	-40 to 125	2371I
TLV2371IP.B	Active	Production	PDIP (P) | 8	50 | TUBE	Yes	NIPDAU	N/A for Pkg Type	-40 to 125	2371I
TLV2371IPE4	Active	Production	PDIP (P) | 8	50 | TUBE	-	Call TI	Call TI	-40 to 125	
TLV2372ID	Active	Production	SOIC (D) | 8	75 | TUBE	Yes	NIPDAU	Level-1-260C-UNLIM	-40 to 125	2372I
TLV2372ID.A	Active	Production	SOIC (D) | 8	75 | TUBE	Yes	NIPDAU	Level-1-260C-UNLIM	-40 to 125	2372I

Orderable part number	Status (1)	Material type (2)	Package | Pins	Package qty | Carrier	RoHS (3)	Lead finish/ Ball material (4)	MSL rating/ Peak reflow (5)	Op temp (°C)	Part marking (6)
TLV2372ID.B	Active	Production	SOIC (D) | 8	75 | TUBE	Yes	NIPDAU	Level-1-260C-UNLIM	-40 to 125	2372I
TLV2372IDGK	Active	Production	VSSOP (DGK) | 8	80 | TUBE	Yes	NIPDAU | NIPDAUAG	Level-1-260C-UNLIM	-40 to 125	APG
TLV2372IDGK.A	Active	Production	VSSOP (DGK) | 8	80 | TUBE	Yes	NIPDAU	Level-1-260C-UNLIM	-40 to 125	APG
TLV2372IDGK.B	Active	Production	VSSOP (DGK) | 8	80 | TUBE	Yes	NIPDAU	Level-1-260C-UNLIM	-40 to 125	APG
TLV2372IDGKG4	Active	Production	VSSOP (DGK) | 8	80 | TUBE	-	Call TI	Call TI	-40 to 125	
TLV2372IDGKR	Active	Production	VSSOP (DGK) | 8	2500 | LARGE T&R	Yes	NIPDAU | NIPDAUAG	Level-1-260C-UNLIM	-40 to 125	APG
TLV2372IDGKR.A	Active	Production	VSSOP (DGK) | 8	2500 | LARGE T&R	Yes	NIPDAU	Level-1-260C-UNLIM	-40 to 125	APG
TLV2372IDGKR.B	Active	Production	VSSOP (DGK) | 8	2500 | LARGE T&R	Yes	NIPDAU	Level-1-260C-UNLIM	-40 to 125	APG
TLV2372IDR	Active	Production	SOIC (D) | 8	2500 | LARGE T&R	Yes	NIPDAU	Level-1-260C-UNLIM	-40 to 125	2372I
TLV2372IDR.A	Active	Production	SOIC (D) | 8	2500 | LARGE T&R	Yes	NIPDAU	Level-1-260C-UNLIM	-40 to 125	2372I
TLV2372IDR.B	Active	Production	SOIC (D) | 8	2500 | LARGE T&R	Yes	NIPDAU	Level-1-260C-UNLIM	-40 to 125	2372I
TLV2372IDRG4	Active	Production	SOIC (D) | 8	2500 | LARGE T&R	-	Call TI	Call TI	-40 to 125	
TLV2372IP	Active	Production	PDIP (P) | 8	50 | TUBE	Yes	NIPDAU	N/A for Pkg Type	-40 to 125	2372I
TLV2372IP.A	Active	Production	PDIP (P) | 8	50 | TUBE	Yes	NIPDAU	N/A for Pkg Type	-40 to 125	2372I
TLV2372IP.B	Active	Production	PDIP (P) | 8	50 | TUBE	Yes	NIPDAU	N/A for Pkg Type	-40 to 125	2372I
TLV2372IPE4	Active	Production	PDIP (P) | 8	50 | TUBE	-	Call TI	Call TI	-40 to 125	
TLV2373ID	Obsolete	Production	SOIC (D) | 14	-	-	Call TI	Call TI	-40 to 125	2373I
TLV2373IDGS	Active	Production	VSSOP (DGS) | 10	80 | TUBE	Yes	NIPDAU | NIPDAUAG	Level-1-260C-UNLIM	-40 to 125	API
TLV2373IDGS.A	Active	Production	VSSOP (DGS) | 10	80 | TUBE	Yes	NIPDAU	Level-1-260C-UNLIM	-40 to 125	API
TLV2373IDGS.B	Active	Production	VSSOP (DGS) | 10	80 | TUBE	Yes	NIPDAU	Level-1-260C-UNLIM	-40 to 125	API
TLV2373IDGSR	Active	Production	VSSOP (DGS) | 10	2500 | LARGE T&R	Yes	NIPDAU | NIPDAUAG	Level-1-260C-UNLIM	-40 to 125	API
TLV2373IDGSR.A	Active	Production	VSSOP (DGS) | 10	2500 | LARGE T&R	Yes	NIPDAU	Level-1-260C-UNLIM	-40 to 125	API
TLV2373IDGSR.B	Active	Production	VSSOP (DGS) | 10	2500 | LARGE T&R	Yes	NIPDAU	Level-1-260C-UNLIM	-40 to 125	API
TLV2373IDGSRG4	Active	Production	VSSOP (DGS) | 10	2500 | LARGE T&R	-	Call TI	Call TI	-40 to 125	
TLV2373IDR	Active	Production	SOIC (D) | 14	2500 | LARGE T&R	Yes	NIPDAU	Level-1-260C-UNLIM	-40 to 125	2373I
TLV2373IDR.A	Active	Production	SOIC (D) | 14	2500 | LARGE T&R	Yes	NIPDAU	Level-1-260C-UNLIM	-40 to 125	2373I
TLV2373IDR.B	Active	Production	SOIC (D) | 14	2500 | LARGE T&R	Yes	NIPDAU	Level-1-260C-UNLIM	-40 to 125	2373I
TLV2373IN	Active	Production	PDIP (N) | 14	25 | TUBE	Yes	NIPDAU	N/A for Pkg Type	-40 to 125	TLV2373I
TLV2373IN.A	Active	Production	PDIP (N) | 14	25 | TUBE	Yes	NIPDAU	N/A for Pkg Type	-40 to 125	TLV2373I
TLV2374ID	Active	Production	SOIC (D) | 14	50 | TUBE	Yes	NIPDAU	Level-1-260C-UNLIM	-40 to 125	2374I
TLV2374ID.A	Active	Production	SOIC (D) | 14	50 | TUBE	Yes	NIPDAU	Level-1-260C-UNLIM	-40 to 125	2374I

Orderable part number	Status (1)	Material type (2)	Package | Pins	Package qty | Carrier	RoHS (3)	Lead finish/ Ball material (4)	MSL rating/ Peak reflow (5)	Op temp (°C)	Part marking (6)
TLV2374ID.B	Active	Production	SOIC (D) | 14	50 | TUBE	Yes	NIPDAU	Level-1-260C-UNLIM	-40 to 125	2374I
TLV2374IDG4	Active	Production	SOIC (D) | 14	50 | TUBE	-	Call TI	Call TI	-40 to 125	
TLV2374IDR	Active	Production	SOIC (D) | 14	2500 | LARGE T&R	Yes	NIPDAU	Level-1-260C-UNLIM	-40 to 125	2374I
TLV2374IDR.A	Active	Production	SOIC (D) | 14	2500 | LARGE T&R	Yes	NIPDAU	Level-1-260C-UNLIM	-40 to 125	2374I
TLV2374IDR.B	Active	Production	SOIC (D) | 14	2500 | LARGE T&R	Yes	NIPDAU	Level-1-260C-UNLIM	-40 to 125	2374I
TLV2374IN	Active	Production	PDIP (N) | 14	25 | TUBE	Yes	NIPDAU	N/A for Pkg Type	-40 to 125	2374I
TLV2374IN.A	Active	Production	PDIP (N) | 14	25 | TUBE	Yes	NIPDAU	N/A for Pkg Type	-40 to 125	2374I
TLV2374IN.B	Active	Production	PDIP (N) | 14	25 | TUBE	Yes	NIPDAU	N/A for Pkg Type	-40 to 125	2374I
TLV2374IPW	Active	Production	TSSOP (PW) | 14	90 | TUBE	Yes	NIPDAU	Level-1-260C-UNLIM	-40 to 125	2374I
TLV2374IPW.A	Active	Production	TSSOP (PW) | 14	90 | TUBE	Yes	NIPDAU	Level-1-260C-UNLIM	-40 to 125	2374I
TLV2374IPW.B	Active	Production	TSSOP (PW) | 14	90 | TUBE	Yes	NIPDAU	Level-1-260C-UNLIM	-40 to 125	2374I
TLV2374IPWR	Active	Production	TSSOP (PW) | 14	2000 | LARGE T&R	Yes	NIPDAU | SN	Level-1-260C-UNLIM	-40 to 125	2374I
TLV2374IPWR.A	Active	Production	TSSOP (PW) | 14	2000 | LARGE T&R	Yes	NIPDAU	Level-1-260C-UNLIM	-40 to 125	2374I
TLV2374IPWR.B	Active	Production	TSSOP (PW) | 14	2000 | LARGE T&R	Yes	NIPDAU	Level-1-260C-UNLIM	-40 to 125	2374I
TLV2374IPWRG4	Active	Production	TSSOP (PW) | 14	2000 | LARGE T&R	-	Call TI	Call TI	-40 to 125	
TLV2375ID	Active	Production	SOIC (D) | 16	40 | TUBE	Yes	NIPDAU	Level-1-260C-UNLIM	-40 to 125	2375I
TLV2375ID.A	Active	Production	SOIC (D) | 16	40 | TUBE	Yes	NIPDAU	Level-1-260C-UNLIM	-40 to 125	2375I
TLV2375ID.B	Active	Production	SOIC (D) | 16	40 | TUBE	Yes	NIPDAU	Level-1-260C-UNLIM	-40 to 125	2375I
TLV2375IDR	Active	Production	SOIC (D) | 16	2500 | LARGE T&R	Yes	NIPDAU	Level-1-260C-UNLIM	-40 to 125	2375I
TLV2375IDR.A	Active	Production	SOIC (D) | 16	2500 | LARGE T&R	Yes	NIPDAU	Level-1-260C-UNLIM	-40 to 125	2375I
TLV2375IDR.B	Active	Production	SOIC (D) | 16	2500 | LARGE T&R	Yes	NIPDAU	Level-1-260C-UNLIM	-40 to 125	2375I
TLV2375IN	Active	Production	PDIP (N) | 16	25 | TUBE	Yes	NIPDAU	N/A for Pkg Type	-40 to 125	2375I
TLV2375IN.A	Active	Production	PDIP (N) | 16	25 | TUBE	Yes	NIPDAU	N/A for Pkg Type	-40 to 125	2375I
TLV2375IN.B	Active	Production	PDIP (N) | 16	25 | TUBE	Yes	NIPDAU	N/A for Pkg Type	-40 to 125	2375I
TLV2375IPW	Active	Production	TSSOP (PW) | 16	90 | TUBE	Yes	NIPDAU	Level-1-260C-UNLIM	-40 to 125	2375I
TLV2375IPW.A	Active	Production	TSSOP (PW) | 16	90 | TUBE	Yes	NIPDAU	Level-1-260C-UNLIM	-40 to 125	2375I
TLV2375IPW.B	Active	Production	TSSOP (PW) | 16	90 | TUBE	Yes	NIPDAU	Level-1-260C-UNLIM	-40 to 125	2375I
TLV2375IPWR	Active	Production	TSSOP (PW) | 16	2000 | LARGE T&R	Yes	NIPDAU	Level-1-260C-UNLIM	-40 to 125	2375I
TLV2375IPWR.A	Active	Production	TSSOP (PW) | 16	2000 | LARGE T&R	Yes	NIPDAU	Level-1-260C-UNLIM	-40 to 125	2375I
TLV2375IPWR.B	Active	Production	TSSOP (PW) | 16	2000 | LARGE T&R	Yes	NIPDAU	Level-1-260C-UNLIM	-40 to 125	2375I
TLV2375IPWRG4	Active	Production	TSSOP (PW) | 16	2000 | LARGE T&R	-	Call TI	Call TI	-40 to 125	

(1) **Status:** For more details on status, see our product life cycle.

(2) **Material type:** When designated, preproduction parts are prototypes/experimental devices, and are not yet approved or released for full production. Testing and final process, including without limitation quality assurance, reliability performance testing, and/or process qualification, may not yet be complete, and this item is subject to further changes or possible discontinuation. If available for ordering, purchases will be subject to an additional waiver at checkout, and are intended for early internal evaluation purposes only. These items are sold without warranties of any kind.

(3) **RoHS values:** Yes, No, RoHS Exempt. See the TI RoHS Statement for additional information and value definition.

(4) **Lead finish/Ball material:** Parts may have multiple material finish options. Finish options are separated by a vertical ruled line. Lead finish/Ball material values may wrap to two lines if the finish value exceeds the maximum column width.

(5) **MSL rating/Peak reflow:** The moisture sensitivity level ratings and peak solder (reflow) temperatures. In the event that a part has multiple moisture sensitivity ratings, only the lowest level per JEDEC standards is shown. Refer to the shipping label for the actual reflow temperature that will be used to mount the part to the printed circuit board.

(6) **Part marking:** There may be an additional marking, which relates to the logo, the lot trace code information, or the environmental category of the part.

Multiple part markings will be inside parentheses. Only one part marking contained in parentheses and separated by a "~" will appear on a part. If a line is indented then it is a continuation of the previous line and the two combined represent the entire part marking for that device.

Important Information and Disclaimer: The information provided on this page represents TI's knowledge and belief as of the date that it is provided. TI bases its knowledge and belief on information provided by third parties, and makes no representation or warranty as to the accuracy of such information. Efforts are underway to better integrate information from third parties. TI has taken and continues to take reasonable steps to provide representative and accurate information but may not have conducted destructive testing or chemical analysis on incoming materials and chemicals. TI and TI suppliers consider certain information to be proprietary, and thus CAS numbers and other limited information may not be available for release.

In no event shall TI's liability arising out of such information exceed the total purchase price of the TI part(s) at issue in this document sold by TI to Customer on an annual basis.

OTHER QUALIFIED VERSIONS OF TLV2371, TLV2372, TLV2374 :

- Automotive : TLV2371-Q1, TLV2372-Q1, TLV2374-Q1
- Enhanced Product : TLV2374-EP

NOTE: Qualified Version Definitions:

- Automotive - Q100 devices qualified for high-reliability automotive applications targeting zero defects
- Enhanced Product - Supports Defense, Aerospace and Medical Applications

TAPE AND REEL INFORMATION

REEL DIMENSIONS

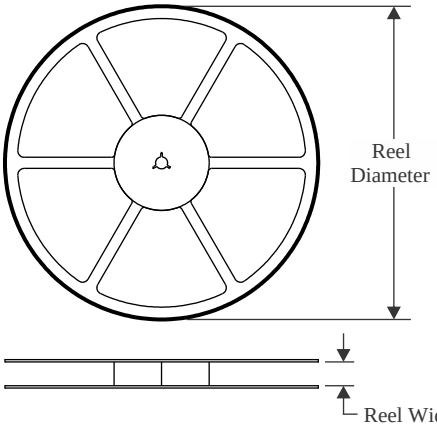

TAPE DIMENSIONS

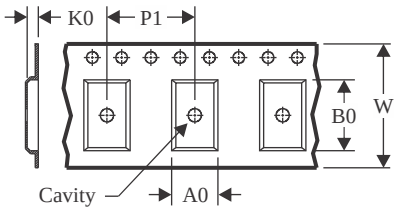

A0	Dimension designed to accommodate the component width
B0	Dimension designed to accommodate the component length
K0	Dimension designed to accommodate the component thickness
W	Overall width of the carrier tape
P1	Pitch between successive cavity centers

QUADRANT ASSIGNMENTS FOR PIN 1 ORIENTATION IN TAPE

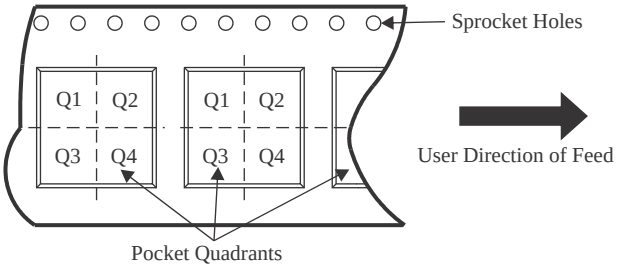

*All dimensions are nominal

Device	Package Type	Package Drawing	Pins	SPQ	Reel Diameter (mm)	Reel Width W1 (mm)	A0 (mm)	B0 (mm)	K0 (mm)	P1 (mm)	W (mm)	Pin1 Quadrant
TLV2370IDBVR	SOT-23	DBV	6	3000	180.0	8.4	3.2	3.2	1.4	4.0	8.0	Q3
TLV2370IDBVR1G4	SOT-23	DBV	6	3000	180.0	8.4	3.2	3.2	1.4	4.0	8.0	Q3
TLV2370IDBVT	SOT-23	DBV	6	250	180.0	8.4	3.2	3.2	1.4	4.0	8.0	Q3
TLV2370IDR	SOIC	D	8	2500	330.0	12.4	6.4	5.2	2.1	8.0	12.0	Q1
TLV2371IDBVR	SOT-23	DBV	5	3000	178.0	9.0	3.23	3.17	1.37	4.0	8.0	Q3
TLV2371IDBVT	SOT-23	DBV	5	250	178.0	9.0	3.3	3.2	1.4	4.0	8.0	Q3
TLV2371IDR	SOIC	D	8	2500	330.0	12.4	6.4	5.2	2.1	8.0	12.0	Q1
TLV2372IDGKR	VSSOP	DGK	8	2500	330.0	12.4	5.3	3.4	1.4	8.0	12.0	Q1
TLV2372IDR	SOIC	D	8	2500	330.0	12.4	6.4	5.2	2.1	8.0	12.0	Q1
TLV2373IDGSR	VSSOP	DGS	10	2500	330.0	12.4	5.3	3.4	1.4	8.0	12.0	Q1
TLV2373IDGSR	VSSOP	DGS	10	2500	330.0	12.4	5.3	3.4	1.4	8.0	12.0	Q1
TLV2373IDR	SOIC	D	14	2500	330.0	16.4	6.5	9.0	2.1	8.0	16.0	Q1
TLV2374IDR	SOIC	D	14	2500	330.0	16.4	6.5	9.0	2.1	8.0	16.0	Q1
TLV2374IPWR	TSSOP	PW	14	2000	330.0	12.4	6.9	5.6	1.6	8.0	12.0	Q1
TLV2374IPWR	TSSOP	PW	14	2000	330.0	12.4	6.9	5.6	1.6	8.0	12.0	Q1
TLV2374IPWR	TSSOP	PW	14	2000	330.0	12.4	6.9	5.3	1.6	8.0	12.0	Q1

Device	Package Type	Package Drawing	Pins	SPQ	Reel Diameter (mm)	Reel Width W1 (mm)	A0 (mm)	B0 (mm)	K0 (mm)	P1 (mm)	W (mm)	Pin1 Quadrant
TLV2375IDR	SOIC	D	16	2500	330.0	16.4	6.5	10.3	2.1	8.0	16.0	Q1
TLV2375IPWR	TSSOP	PW	16	2000	330.0	12.4	6.9	5.6	1.6	8.0	12.0	Q1

TAPE AND REEL BOX DIMENSIONS

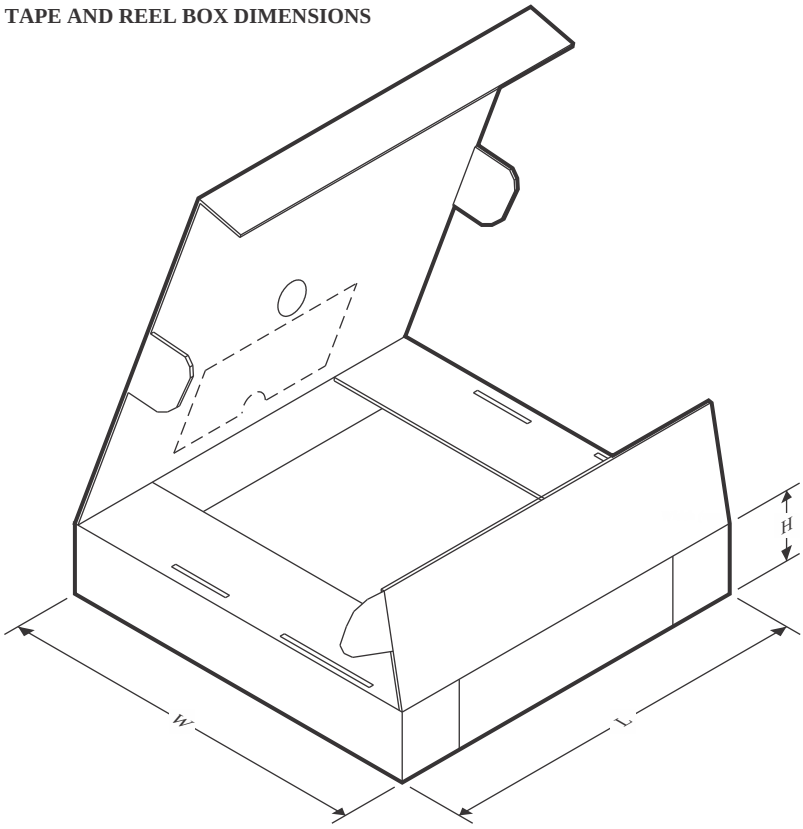

*All dimensions are nominal

Device	Package Type	Package Drawing	Pins	SPQ	Length (mm)	Width (mm)	Height (mm)
TLV2370IDBVR	SOT-23	DBV	6	3000	210.0	185.0	35.0
TLV2370IDBVR1G4	SOT-23	DBV	6	3000	210.0	185.0	35.0
TLV2370IDBVT	SOT-23	DBV	6	250	210.0	185.0	35.0
TLV2370IDR	SOIC	D	8	2500	353.0	353.0	32.0
TLV2371IDBVR	SOT-23	DBV	5	3000	180.0	180.0	18.0
TLV2371IDBVT	SOT-23	DBV	5	250	180.0	180.0	18.0
TLV2371IDR	SOIC	D	8	2500	353.0	353.0	32.0
TLV2372IDGKR	VSSOP	DGK	8	2500	364.0	364.0	27.0
TLV2372IDR	SOIC	D	8	2500	353.0	353.0	32.0
TLV2373IDGSR	VSSOP	DGS	10	2500	364.0	364.0	27.0
TLV2373IDGSR	VSSOP	DGS	10	2500	358.0	335.0	35.0
TLV2373IDR	SOIC	D	14	2500	353.0	353.0	32.0
TLV2374IDR	SOIC	D	14	2500	353.0	353.0	32.0
TLV2374IPWR	TSSOP	PW	14	2000	356.0	356.0	35.0
TLV2374IPWR	TSSOP	PW	14	2000	353.0	353.0	32.0
TLV2374IPWR	TSSOP	PW	14	2000	367.0	367.0	35.0
TLV2375IDR	SOIC	D	16	2500	353.0	353.0	32.0
TLV2375IPWR	TSSOP	PW	16	2000	353.0	353.0	32.0

TUBE

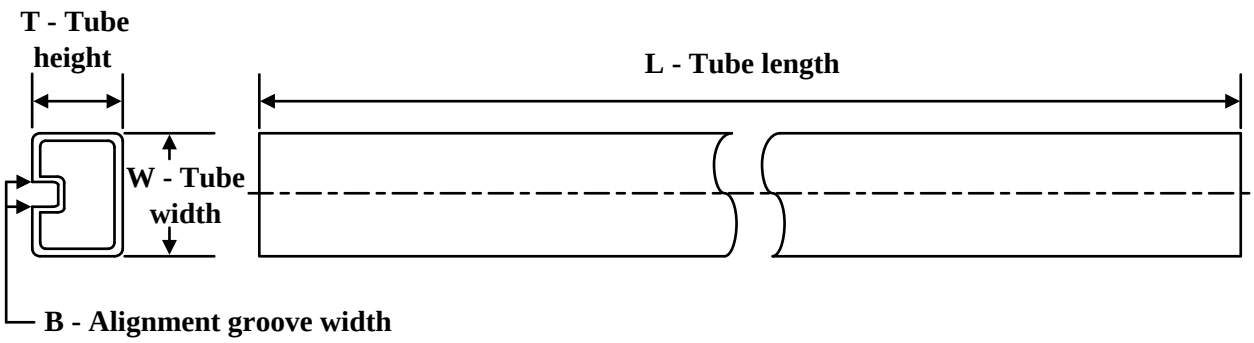

*All dimensions are nominal

Device	Package Name	Package Type	Pins	SPQ	L (mm)	W (mm)	T (µm)	B (mm)
TLV2370IP	P	PDIP	8	50	506	13.97	11230	4.32
TLV2370IP.B	P	PDIP	8	50	506	13.97	11230	4.32
TLV2371ID	D	SOIC	8	75	507	8	3940	4.32
TLV2371ID.B	D	SOIC	8	75	507	8	3940	4.32
TLV2371IP	P	PDIP	8	50	506	13.97	11230	4.32
TLV2371IP.B	P	PDIP	8	50	506	13.97	11230	4.32
TLV2372ID	D	SOIC	8	75	507	8	3940	4.32
TLV2372ID.A	D	SOIC	8	75	507	8	3940	4.32
TLV2372ID.B	D	SOIC	8	75	507	8	3940	4.32
TLV2372IDGK	DGK	VSSOP	8	80	274	6.2	2540	2.5
TLV2372IDGK	DGK	VSSOP	8	80	330	6.55	500	2.88
TLV2372IDGK.A	DGK	VSSOP	8	80	274	6.2	2540	2.5
TLV2372IDGK.A	DGK	VSSOP	8	80	330	6.55	500	2.88
TLV2372IDGK.B	DGK	VSSOP	8	80	330	6.55	500	2.88
TLV2372IDGK.B	DGK	VSSOP	8	80	274	6.2	2540	2.5
TLV2372IP	P	PDIP	8	50	506	13.97	11230	4.32
TLV2372IP.A	P	PDIP	8	50	506	13.97	11230	4.32
TLV2372IP.B	P	PDIP	8	50	506	13.97	11230	4.32
TLV2373IDGS	DGS	VSSOP	10	80	330	6.55	500	2.88
TLV2373IDGS	DGS	VSSOP	10	80	274	6.2	2540	2.5
TLV2373IDGS.A	DGS	VSSOP	10	80	330	6.55	500	2.88
TLV2373IDGS.A	DGS	VSSOP	10	80	274	6.2	2540	2.5
TLV2373IDGS.B	DGS	VSSOP	10	80	330	6.55	500	2.88
TLV2373IDGS.B	DGS	VSSOP	10	80	274	6.2	2540	2.5
TLV2373IN	N	PDIP	14	25	506	13.97	11230	4.32
TLV2373IN.A	N	PDIP	14	25	506	13.97	11230	4.32
TLV2374ID	D	SOIC	14	50	507	8	3940	4.32
TLV2374ID.A	D	SOIC	14	50	507	8	3940	4.32
TLV2374ID.B	D	SOIC	14	50	507	8	3940	4.32

Device	Package Name	Package Type	Pins	SPQ	L (mm)	W (mm)	T (µm)	B (mm)
TLV2374IN	N	PDIP	14	25	506	13.97	11230	4.32
TLV2374IN.A	N	PDIP	14	25	506	13.97	11230	4.32
TLV2374IN.B	N	PDIP	14	25	506	13.97	11230	4.32
TLV2374IPW	PW	TSSOP	14	90	530	10.2	3600	3.5
TLV2374IPW.A	PW	TSSOP	14	90	530	10.2	3600	3.5
TLV2374IPW.B	PW	TSSOP	14	90	530	10.2	3600	3.5
TLV2375ID	D	SOIC	16	40	507	8	3940	4.32
TLV2375ID.A	D	SOIC	16	40	507	8	3940	4.32
TLV2375ID.B	D	SOIC	16	40	507	8	3940	4.32
TLV2375IN	N	PDIP	16	25	506	13.97	11230	4.32
TLV2375IN.A	N	PDIP	16	25	506	13.97	11230	4.32
TLV2375IN.B	N	PDIP	16	25	506	13.97	11230	4.32
TLV2375IPW	PW	TSSOP	16	90	530	10.2	3600	3.5
TLV2375IPW.A	PW	TSSOP	16	90	530	10.2	3600	3.5
TLV2375IPW.B	PW	TSSOP	16	90	530	10.2	3600	3.5

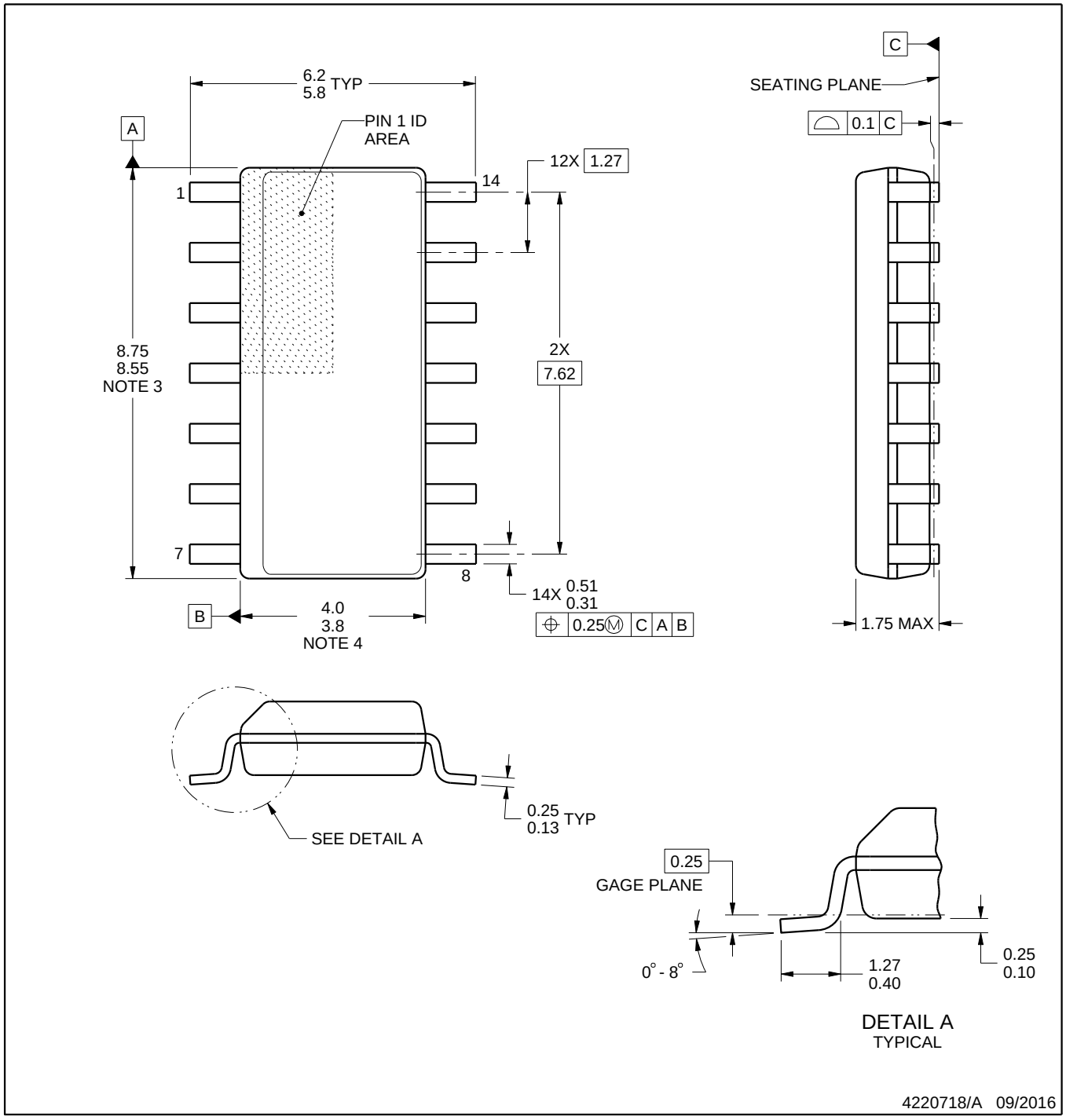

NOTES:

1. All linear dimensions are in millimeters. Dimensions in parenthesis are for reference only. Dimensioning and tolerancing per ASME Y14.5M.
2. This drawing is subject to change without notice.
3. This dimension does not include mold flash, protrusions, or gate burrs. Mold flash, protrusions, or gate burrs shall not exceed 0.15 mm, per side.
4. This dimension does not include interlead flash. Interlead flash shall not exceed 0.43 mm, per side.
5. Reference JEDEC registration MS-012, variation AB.

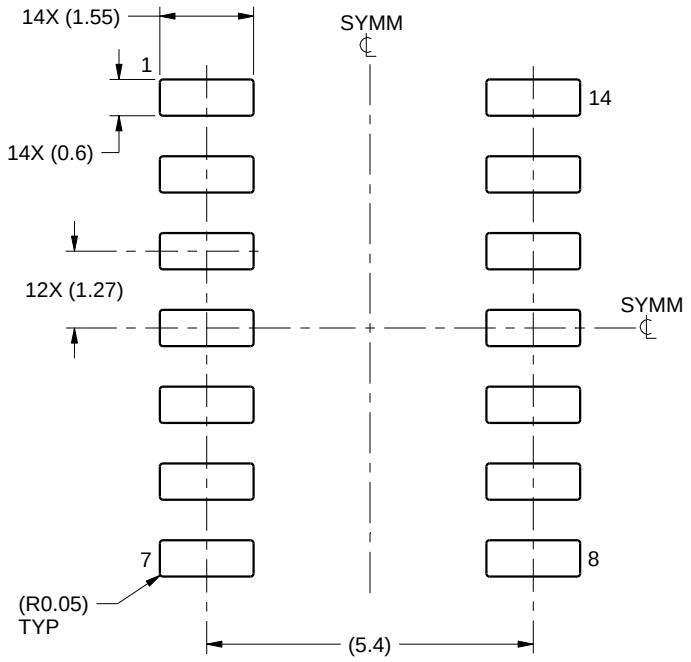

LAND PATTERN EXAMPLE
SCALE:8X

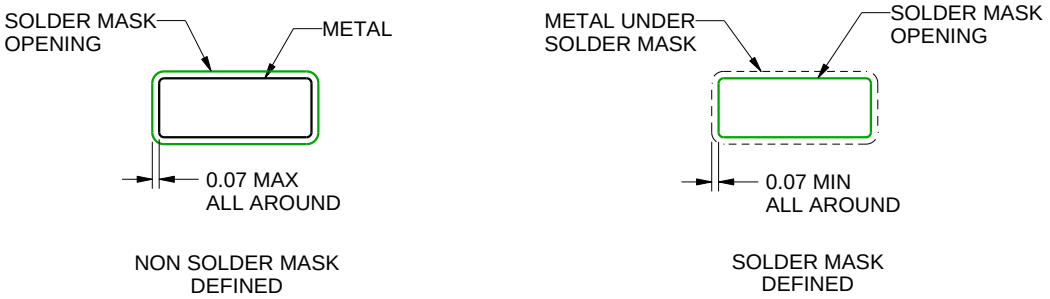

SOLDER MASK DETAILS

4220718/A 09/2016

NOTES: (continued)

6. Publication IPC-7351 may have alternate designs.
7. Solder mask tolerances between and around signal pads can vary based on board fabrication site.

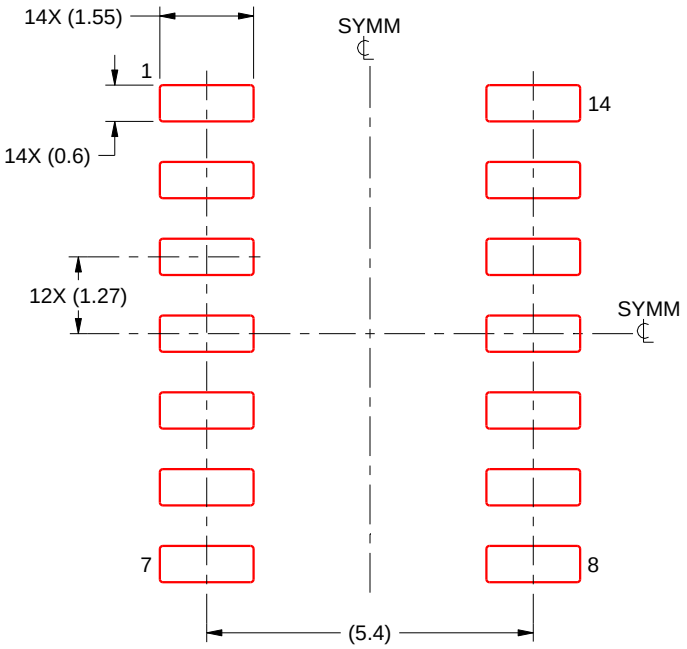

SOLDER PASTE EXAMPLE
BASED ON 0.125 mm THICK STENCIL
SCALE:8X

4220718/A 09/2016

NOTES: (continued)

8. Laser cutting apertures with trapezoidal walls and rounded corners may offer better paste release. IPC-7525 may have alternate design recommendations.
9. Board assembly site may have different recommendations for stencil design.

D (R–PDSO–G16) PLASTIC SMALL OUTLINE

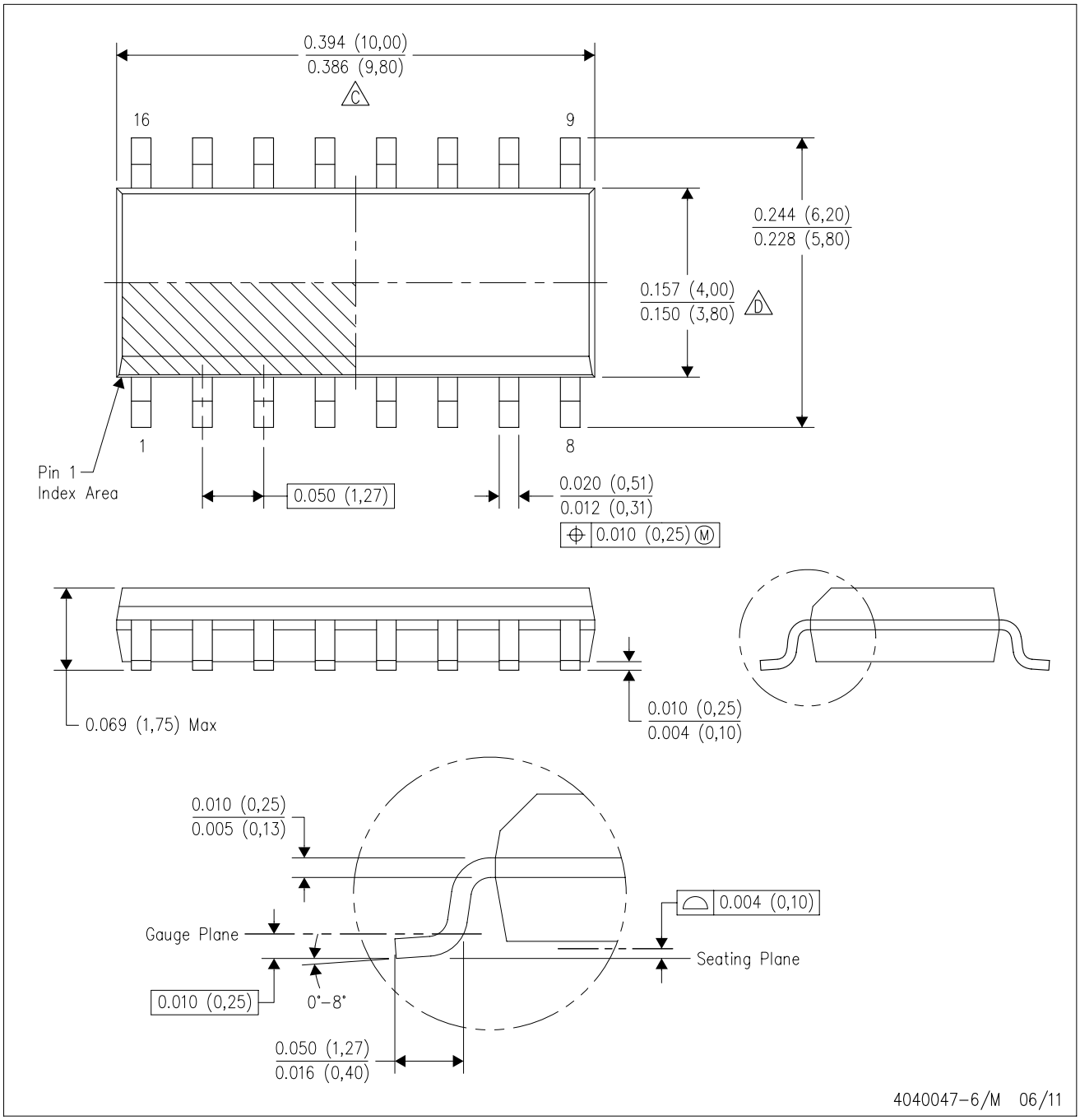

NOTES:
A. All linear dimensions are in inches (millimeters).
B. This drawing is subject to change without notice.
C. Body length does not include mold flash, protrusions, or gate burrs. Mold flash, protrusions, or gate burrs shall not exceed 0.006 (0,15) each side.
D. Body width does not include interlead flash. Interlead flash shall not exceed 0.017 (0,43) each side.
E. Reference JEDEC MS–012 variation AC.

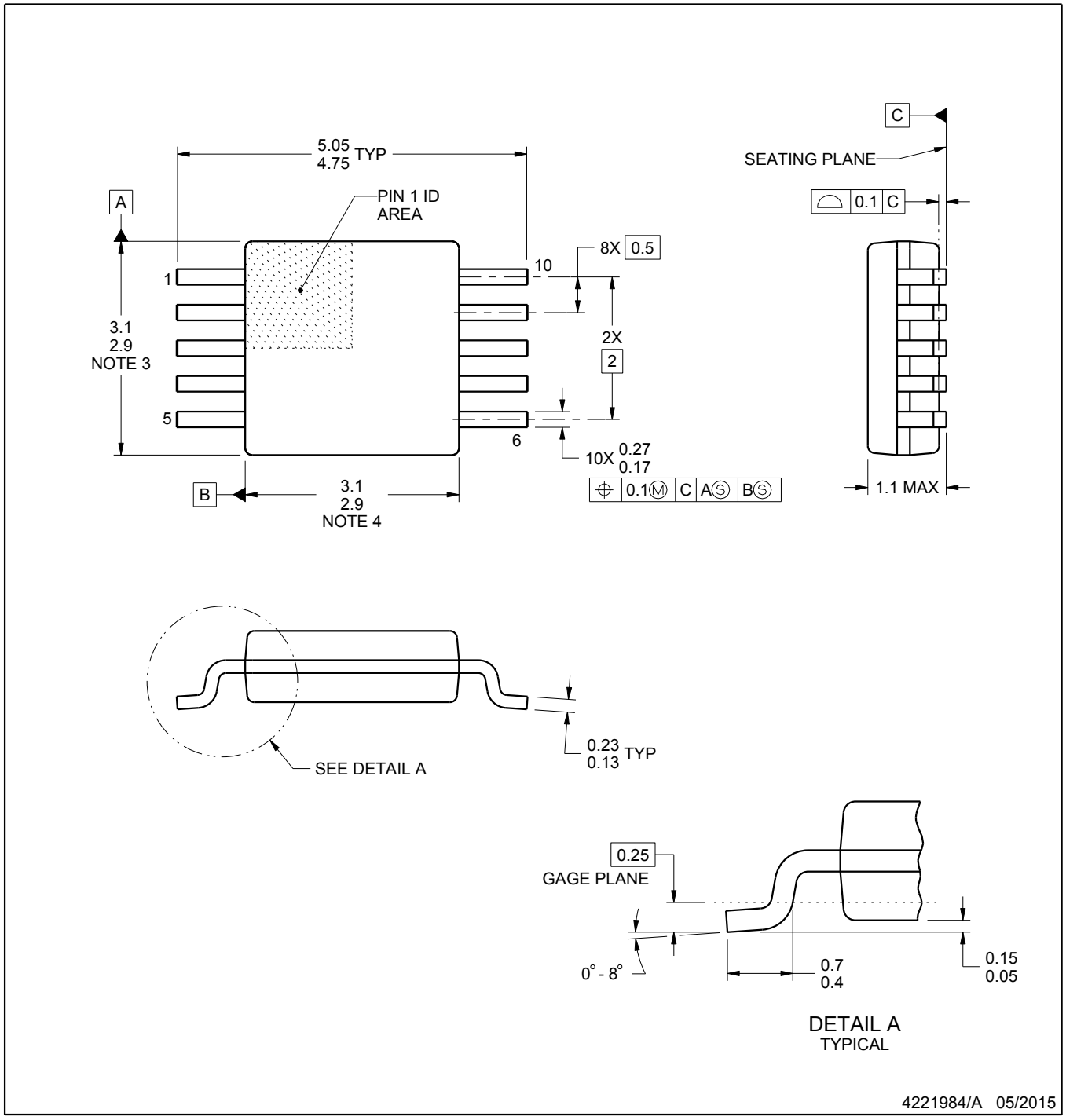

NOTES:

1. All linear dimensions are in millimeters. Any dimensions in parenthesis are for reference only. Dimensioning and tolerancing per ASME Y14.5M.
2. This drawing is subject to change without notice.
3. This dimension does not include mold flash, protrusions, or gate burrs. Mold flash, protrusions, or gate burrs shall not exceed 0.15 mm per side.
4. This dimension does not include interlead flash. Interlead flash shall not exceed 0.25 mm per side.
5. Reference JEDEC registration MO-187, variation BA.

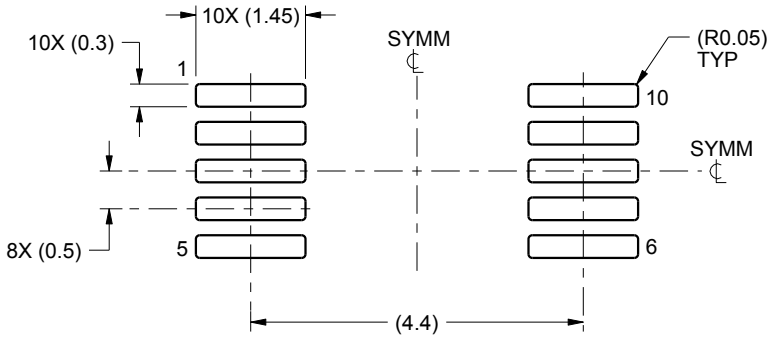

LAND PATTERN EXAMPLE
SCALE:10X

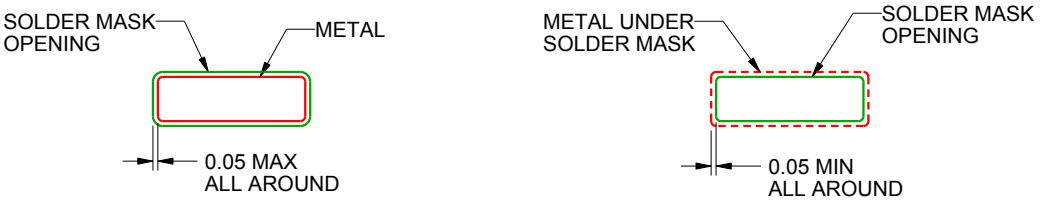

NON SOLDER MASK
DEFINED

SOLDER MASK
DEFINED

SOLDER MASK DETAILS
NOT TO SCALE

4221984/A 05/2015

NOTES: (continued)

6. Publication IPC-7351 may have alternate designs.
7. Solder mask tolerances between and around signal pads can vary based on board fabrication site.

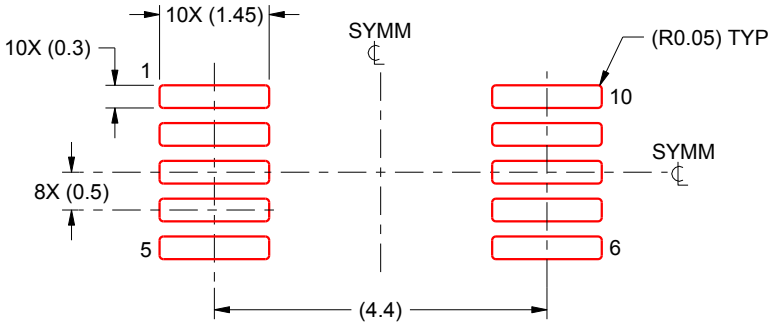

SOLDER PASTE EXAMPLE
BASED ON 0.125 mm THICK STENCIL
SCALE:10X

4221984/A 05/2015

NOTES: (continued)

8. Laser cutting apertures with trapezoidal walls and rounded corners may offer better paste release. IPC-7525 may have alternate design recommendations.
9. Board assembly site may have different recommendations for stencil design.

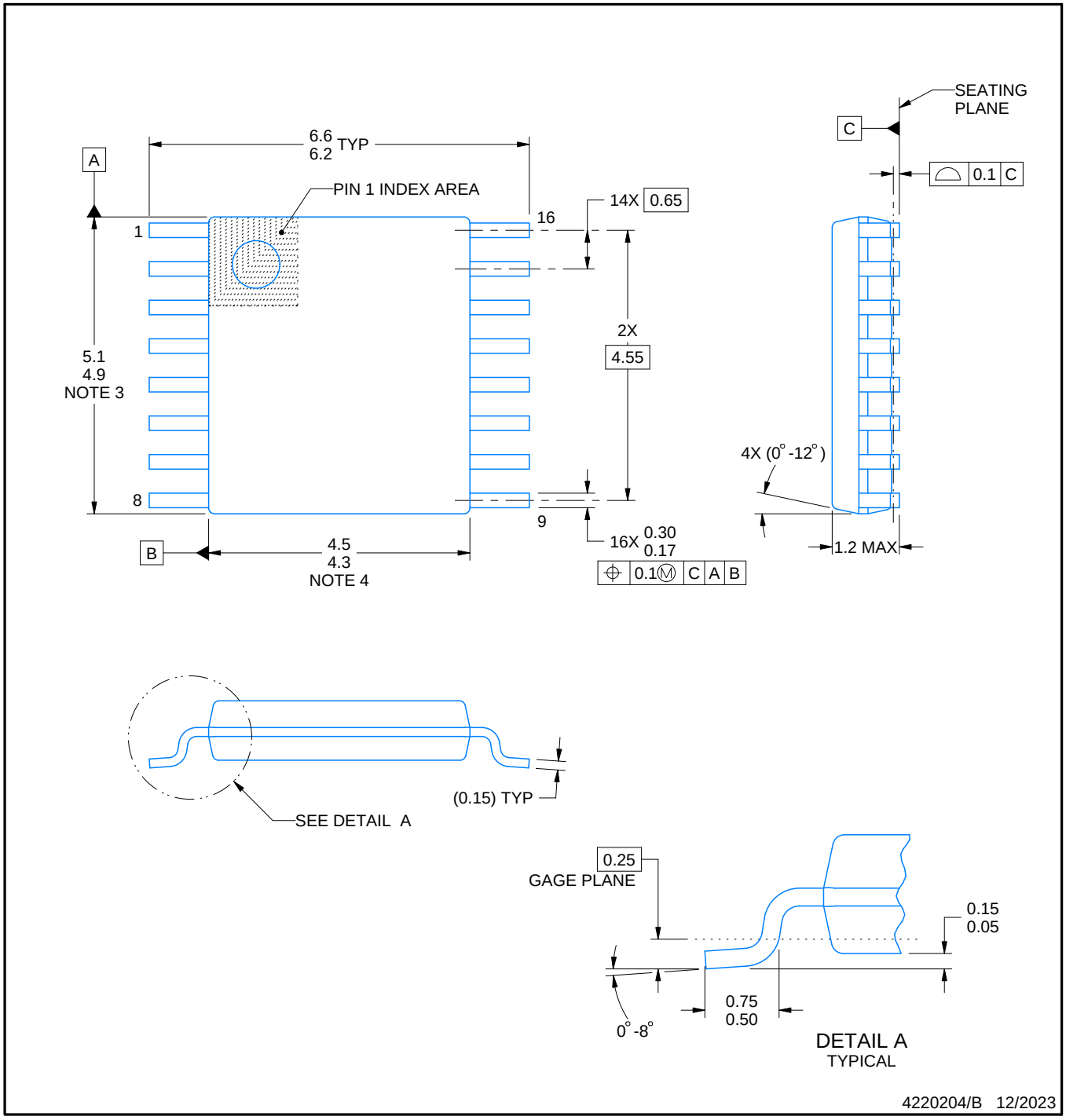

NOTES:

1. All linear dimensions are in millimeters. Any dimensions in parenthesis are for reference only. Dimensioning and tolerancing per ASME Y14.5M.
2. This drawing is subject to change without notice.
3. This dimension does not include mold flash, protrusions, or gate burrs. Mold flash, protrusions, or gate burrs shall not exceed 0.15 mm per side.
4. This dimension does not include interlead flash. Interlead flash shall not exceed 0.25 mm per side.
5. Reference JEDEC registration MO-153.

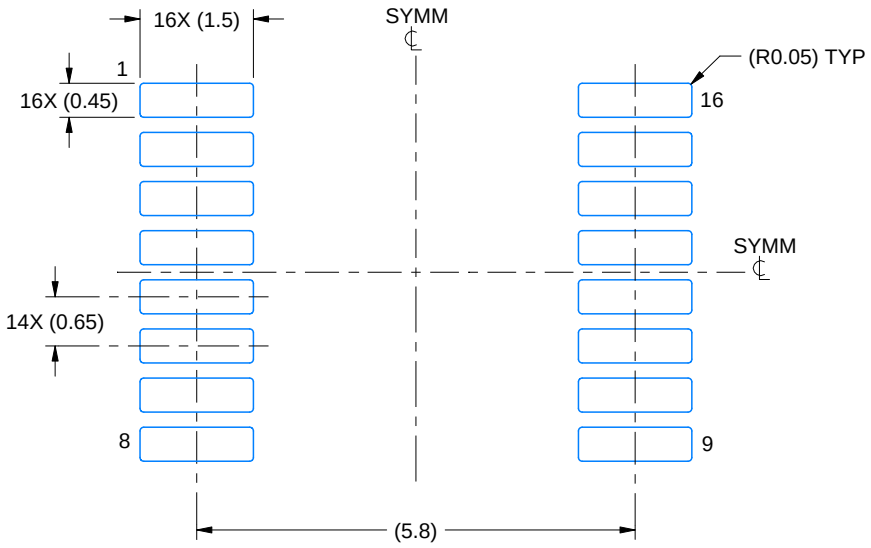

LAND PATTERN EXAMPLE
EXPOSED METAL SHOWN
SCALE: 10X

NON-SOLDER MASK DEFINED (PREFERRED)

SOLDER MASK DEFINED

SOLDER MASK DETAILS

4220204/B 12/2023

NOTES: (continued)

6. Publication IPC-7351 may have alternate designs.
7. Solder mask tolerances between and around signal pads can vary based on board fabrication site.

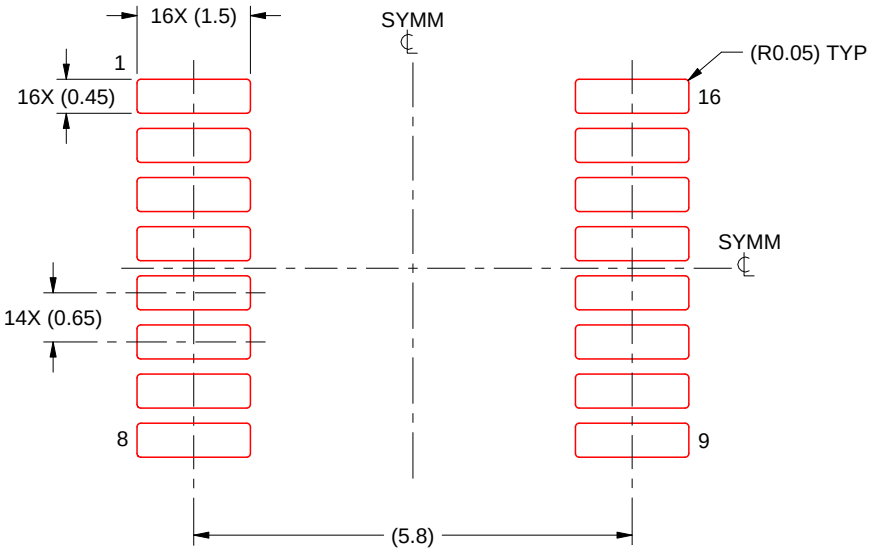

SOLDER PASTE EXAMPLE
BASED ON 0.125 mm THICK STENCIL
SCALE: 10X

4220204/B 12/2023

NOTES: (continued)

8. Laser cutting apertures with trapezoidal walls and rounded corners may offer better paste release. IPC-7525 may have alternate design recommendations.
9. Board assembly site may have different recommendations for stencil design.

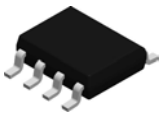

PACKAGE OUTLINE

D0008A

SOIC - 1.75 mm max height

SMALL OUTLINE INTEGRATED CIRCUIT

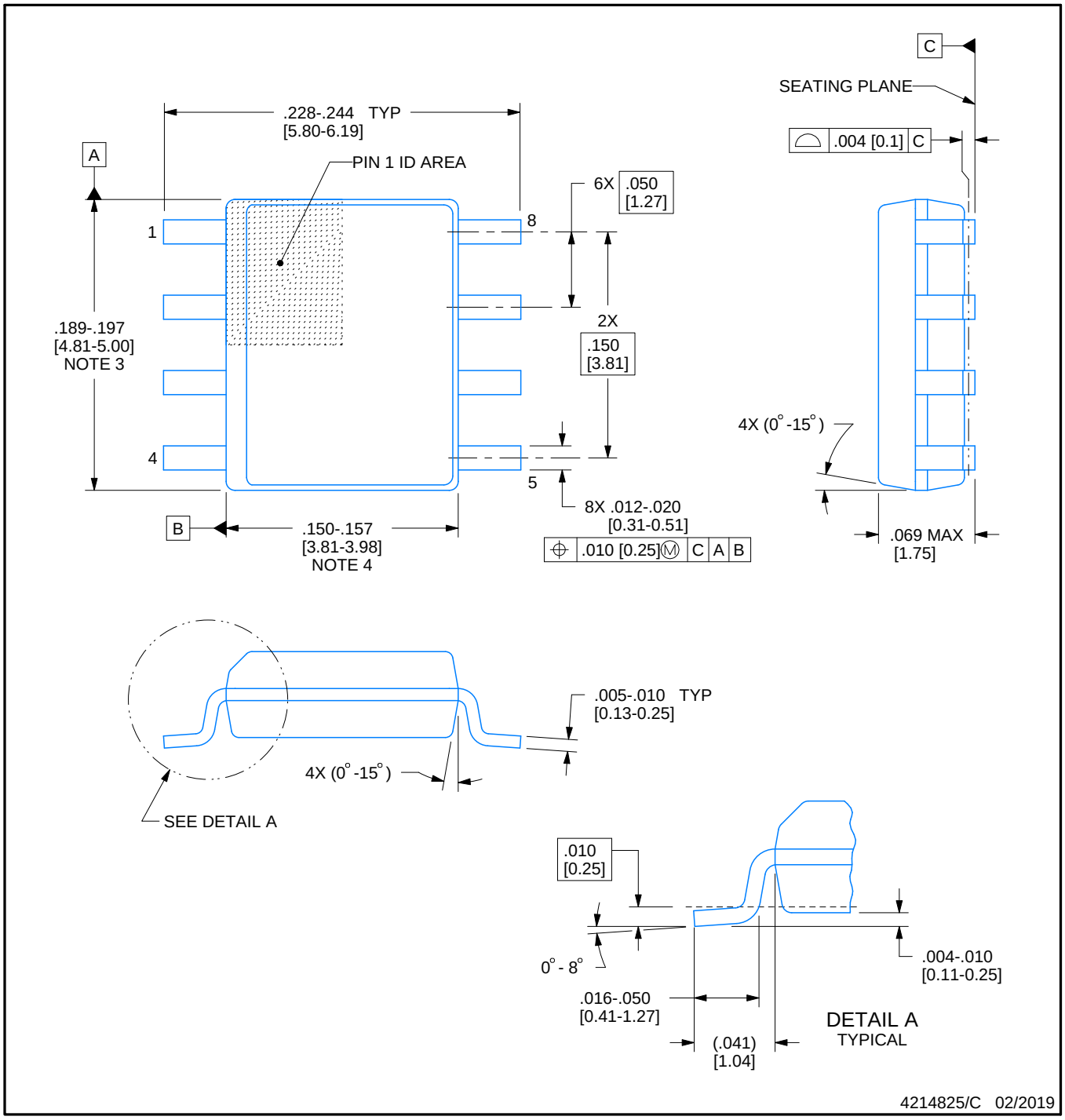

NOTES:

1. Linear dimensions are in inches [millimeters]. Dimensions in parenthesis are for reference only. Controlling dimensions are in inches. Dimensioning and tolerancing per ASME Y14.5M.
2. This drawing is subject to change without notice.
3. This dimension does not include mold flash, protrusions, or gate burrs. Mold flash, protrusions, or gate burrs shall not exceed .006 [0.15] per side.
4. This dimension does not include interlead flash.
5. Reference JEDEC registration MS-012, variation AA.

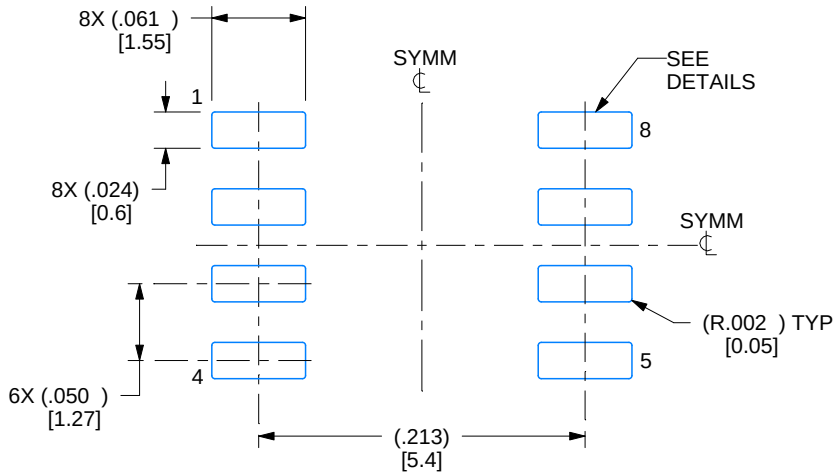

LAND PATTERN EXAMPLE
EXPOSED METAL SHOWN
SCALE:8X

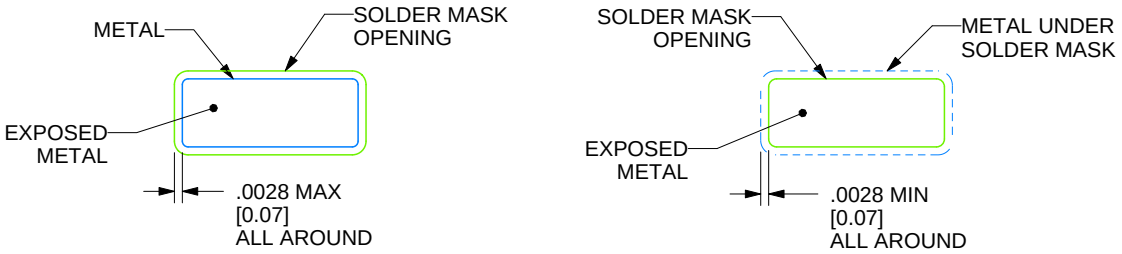

SOLDER MASK DETAILS

4214825/C 02/2019

NOTES: (continued)

6. Publication IPC-7351 may have alternate designs.
7. Solder mask tolerances between and around signal pads can vary based on board fabrication site.

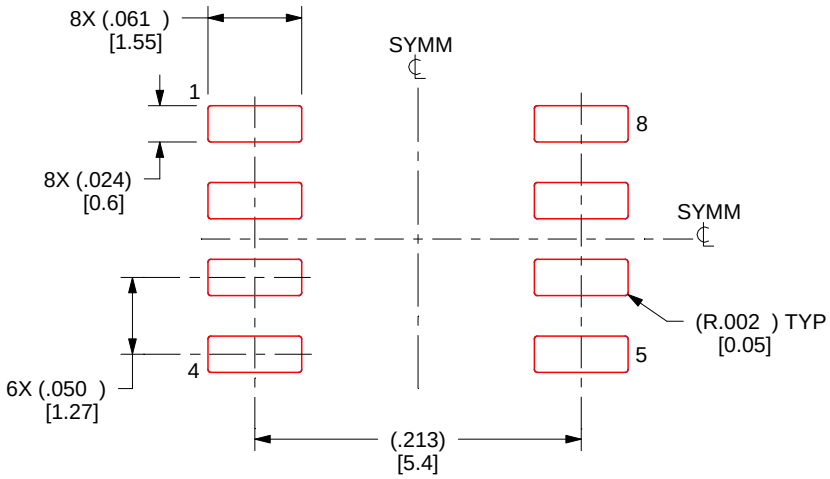

SOLDER PASTE EXAMPLE
BASED ON .005 INCH [0.125 MM] THICK STENCIL
SCALE:8X

4214825/C 02/2019

NOTES: (continued)

8. Laser cutting apertures with trapezoidal walls and rounded corners may offer better paste release. IPC-7525 may have alternate design recommendations.
9. Board assembly site may have different recommendations for stencil design.

P (R–PDIP–T8) PLASTIC DUAL–IN–LINE PACKAGE

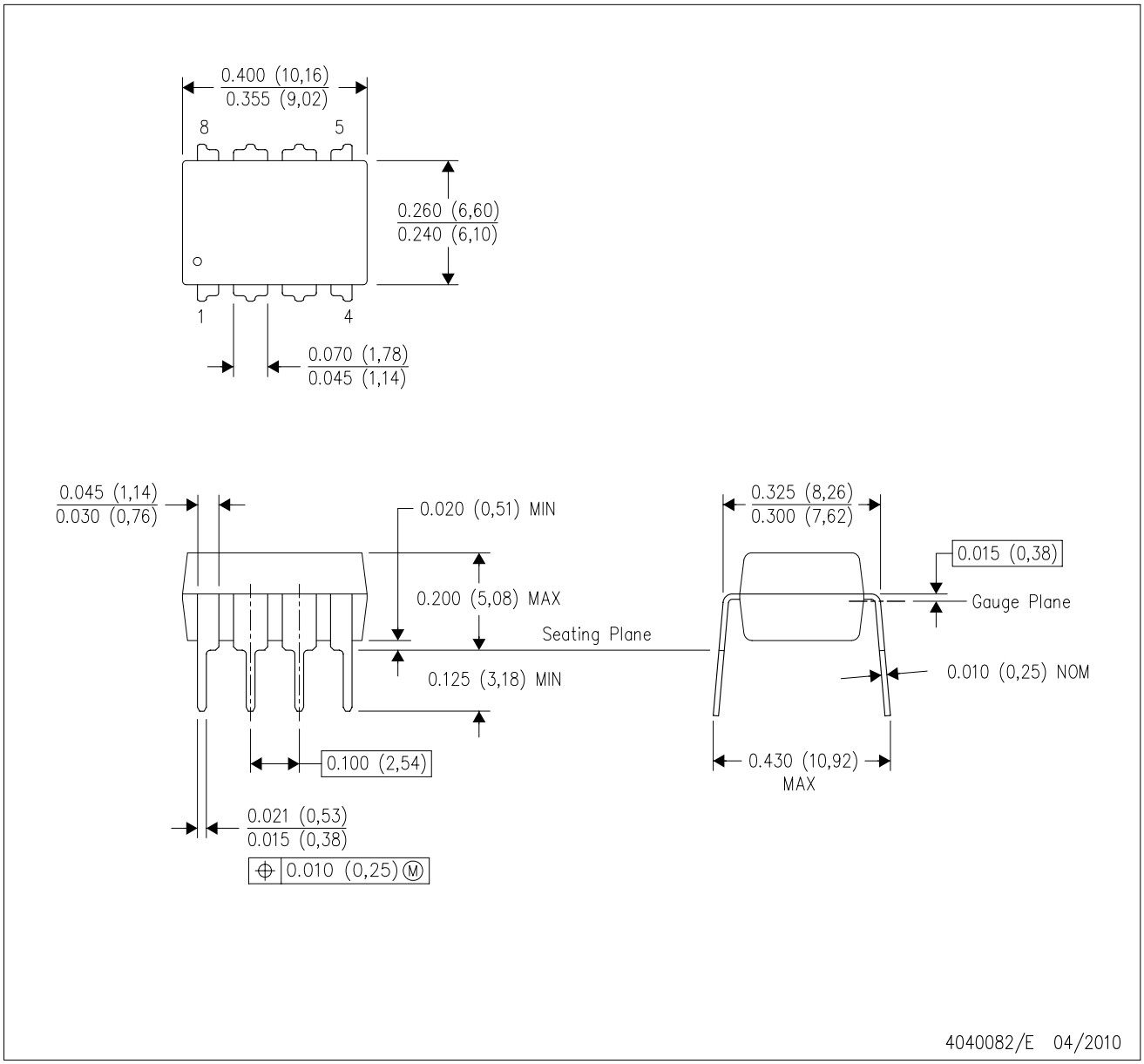

NOTES:
A. All linear dimensions are in inches (millimeters).
B. This drawing is subject to change without notice.
C. Falls within JEDEC MS–001 variation BA.

N (R–PDIP–T**) PLASTIC DUAL–IN–LINE PACKAGE

16 PINS SHOWN

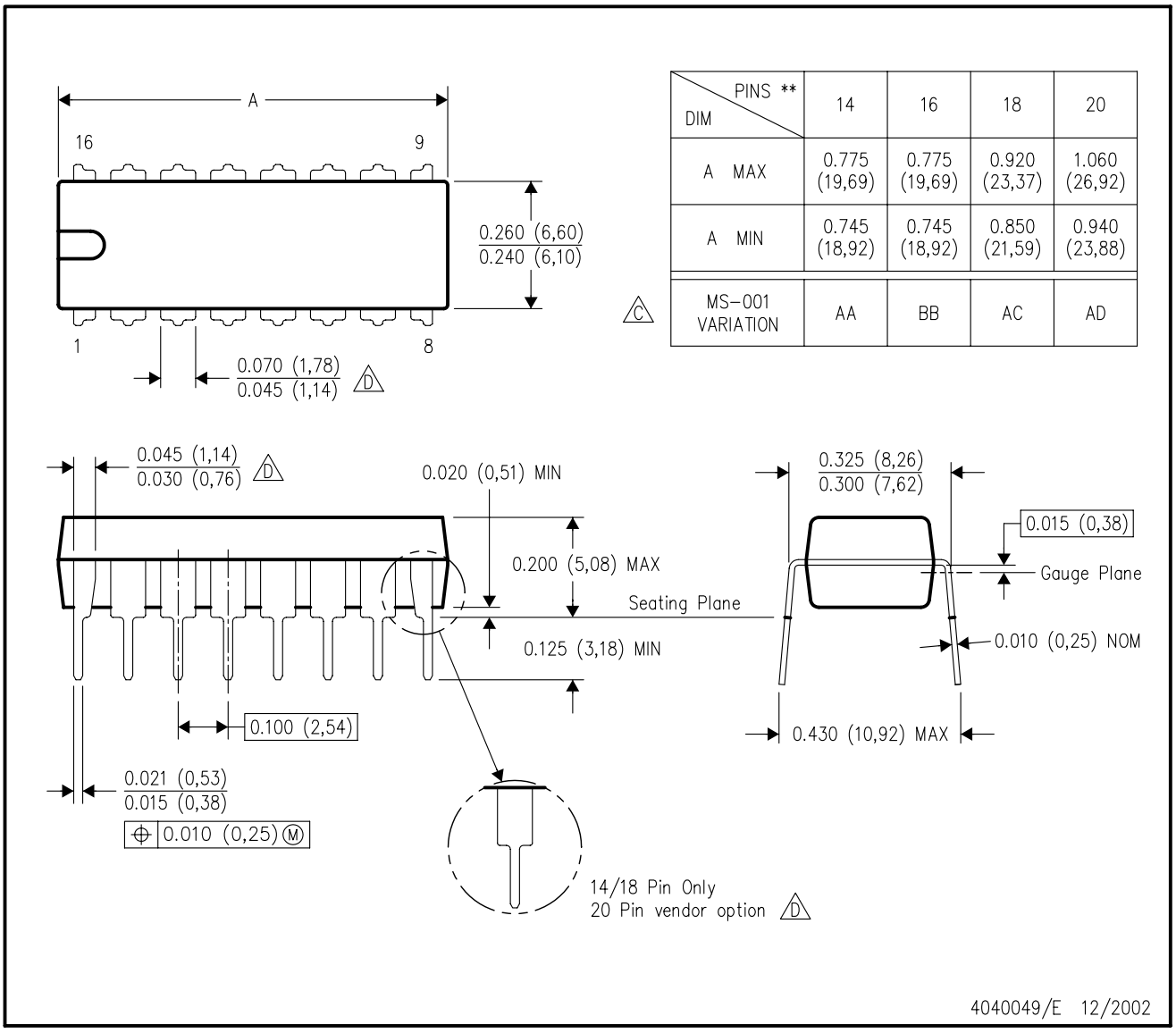

DIM \ PINS **	14	16	18	20
A MAX	0.775 (19,69)	0.775 (19,69)	0.920 (23,37)	1.060 (26,92)
A MIN	0.745 (18,92)	0.745 (18,92)	0.850 (21,59)	0.940 (23,88)
MS–001 VARIATION (C)	AA	BB	AC	AD

NOTES:
A. All linear dimensions are in inches (millimeters).
B. This drawing is subject to change without notice.
C. Falls within JEDEC MS–001, except 18 and 20 pin minimum body length (Dim A).
D. The 20 pin end lead shoulder width is a vendor option, either half or full width.

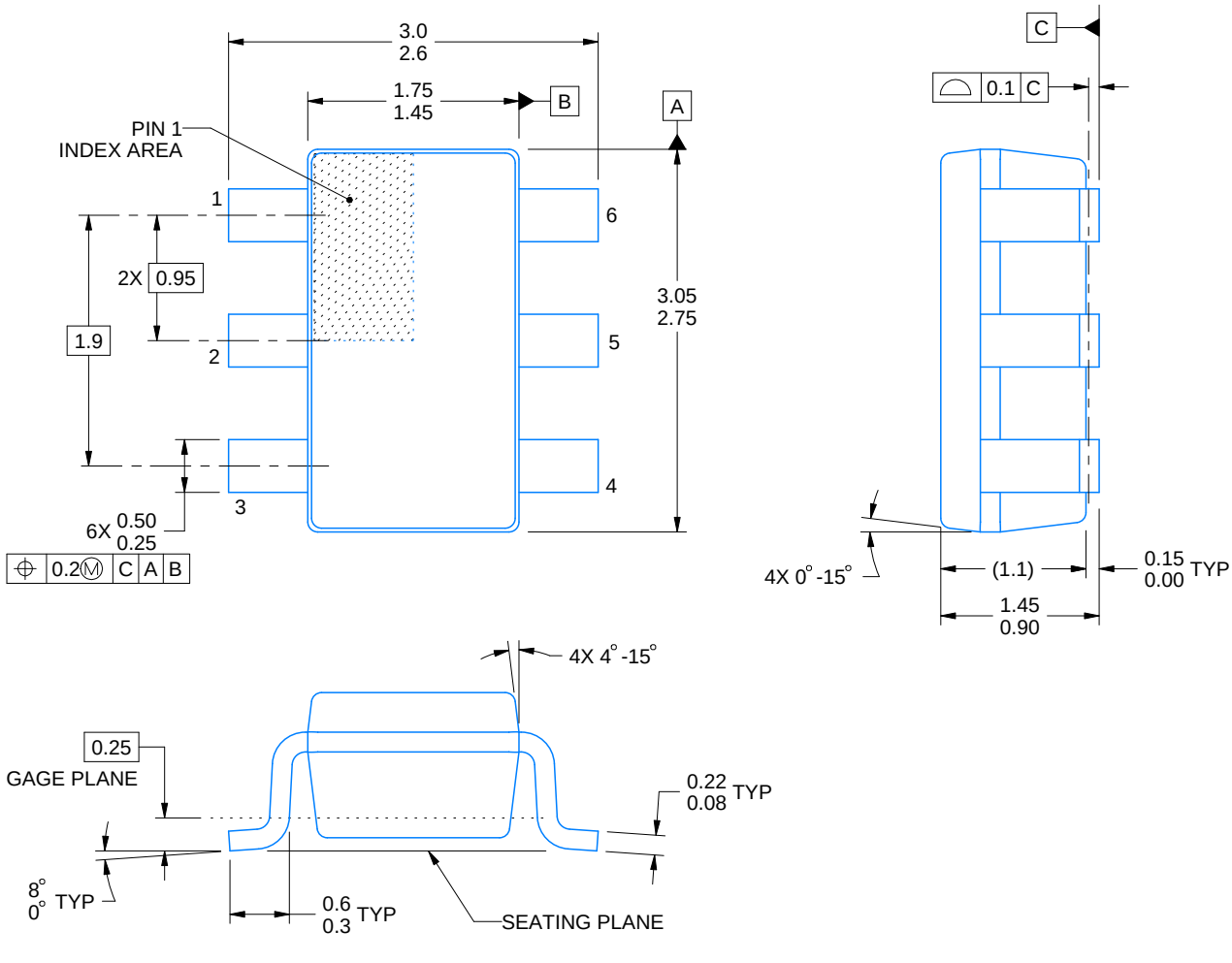

4214840/G 08/2024

NOTES:

1. All linear dimensions are in millimeters. Any dimensions in parenthesis are for reference only. Dimensioning and tolerancing per ASME Y14.5M.
2. This drawing is subject to change without notice.
3. Body dimensions do not include mold flash or protrusion. Mold flash and protrusion shall not exceed 0.25 per side.
4. Leads 1,2,3 may be wider than leads 4,5,6 for package orientation.
5. Refernce JEDEC MO-178.

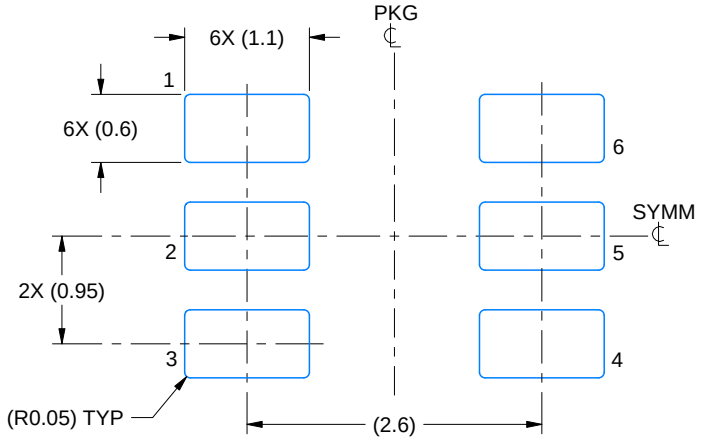

LAND PATTERN EXAMPLE
EXPOSED METAL SHOWN
SCALE:15X

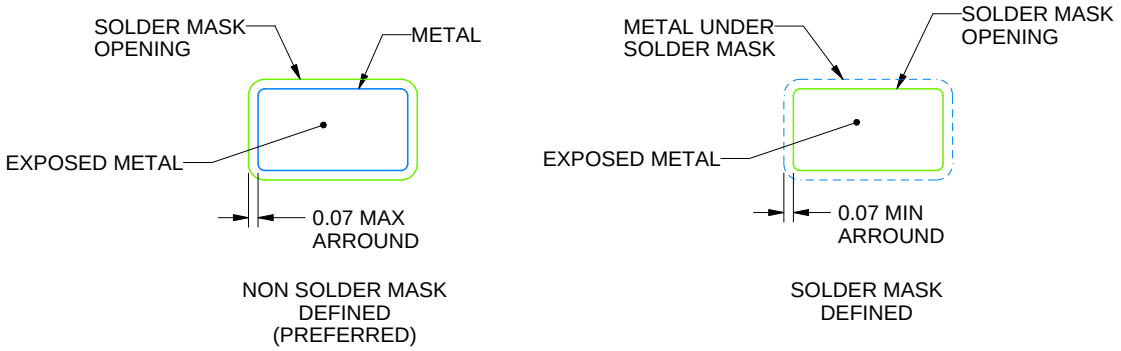

SOLDER MASK DETAILS

4214840/G 08/2024

NOTES: (continued)

6. Publication IPC-7351 may have alternate designs.
7. Solder mask tolerances between and around signal pads can vary based on board fabrication site.

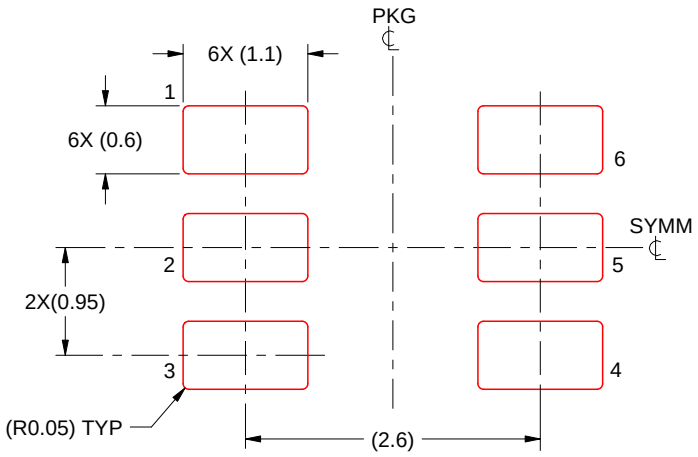

SOLDER PASTE EXAMPLE
BASED ON 0.125 mm THICK STENCIL
SCALE:15X

4214840/G 08/2024

NOTES: (continued)

8. Laser cutting apertures with trapezoidal walls and rounded corners may offer better paste release. IPC-7525 may have alternate design recommendations.
9. Board assembly site may have different recommendations for stencil design.

PW0014A

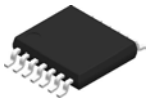

PACKAGE OUTLINE

TSSOP - 1.2 mm max height

SMALL OUTLINE PACKAGE

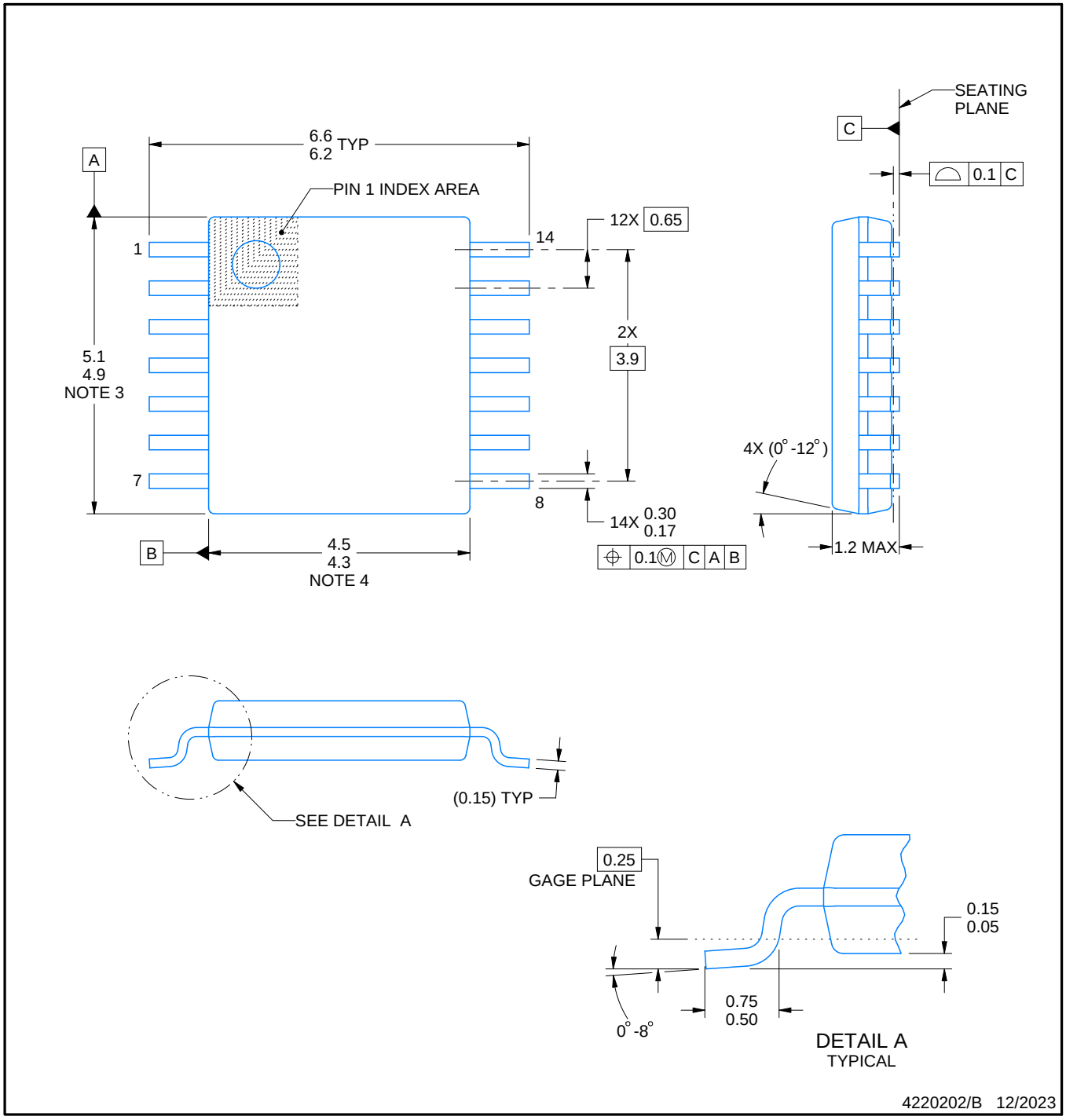

NOTES:

1. All linear dimensions are in millimeters. Any dimensions in parenthesis are for reference only. Dimensioning and tolerancing per ASME Y14.5M.
2. This drawing is subject to change without notice.
3. This dimension does not include mold flash, protrusions, or gate burrs. Mold flash, protrusions, or gate burrs shall not exceed 0.15 mm per side.
4. This dimension does not include interlead flash. Interlead flash shall not exceed 0.25 mm per side.
5. Reference JEDEC registration MO-153.

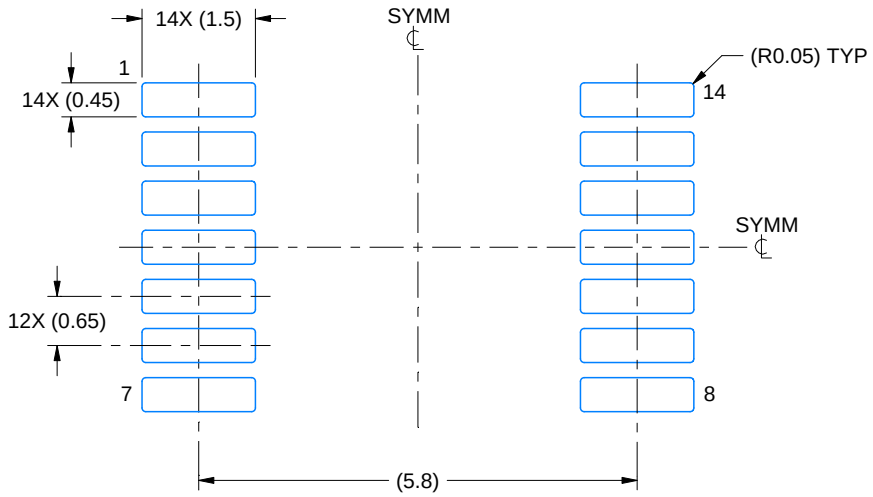

LAND PATTERN EXAMPLE
EXPOSED METAL SHOWN
SCALE: 10X

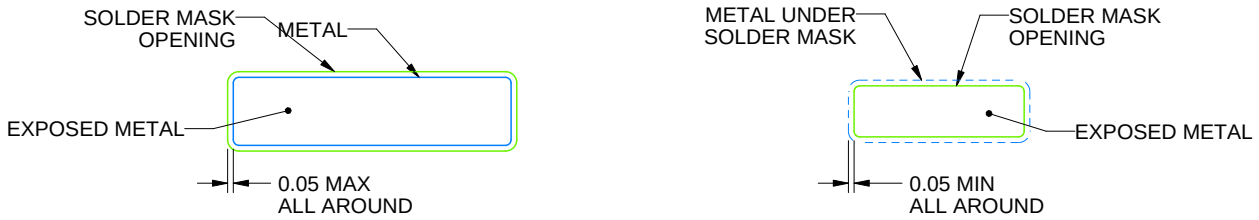

NON-SOLDER MASK DEFINED (PREFERRED)

SOLDER MASK DEFINED

SOLDER MASK DETAILS

4220202/B 12/2023

NOTES: (continued)

6. Publication IPC-7351 may have alternate designs.
7. Solder mask tolerances between and around signal pads can vary based on board fabrication site.

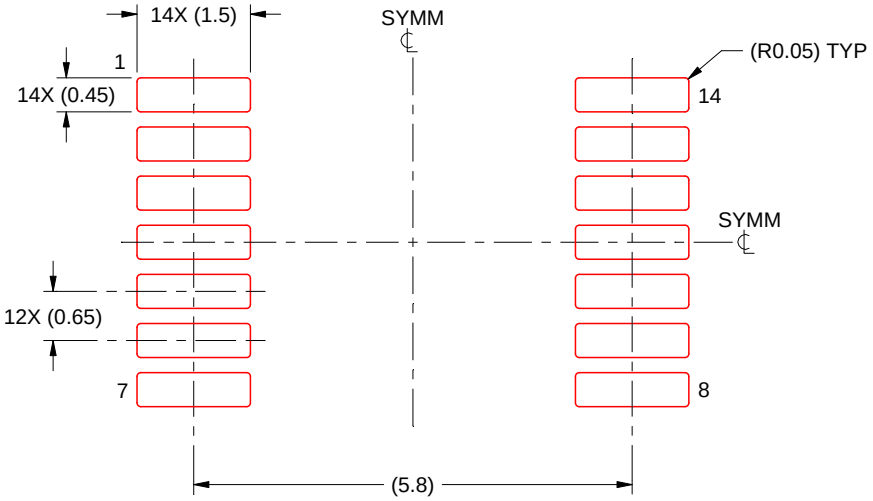

SOLDER PASTE EXAMPLE
BASED ON 0.125 mm THICK STENCIL
SCALE: 10X

4220202/B 12/2023

NOTES: (continued)

8. Laser cutting apertures with trapezoidal walls and rounded corners may offer better paste release. IPC-7525 may have alternate design recommendations.
9. Board assembly site may have different recommendations for stencil design.

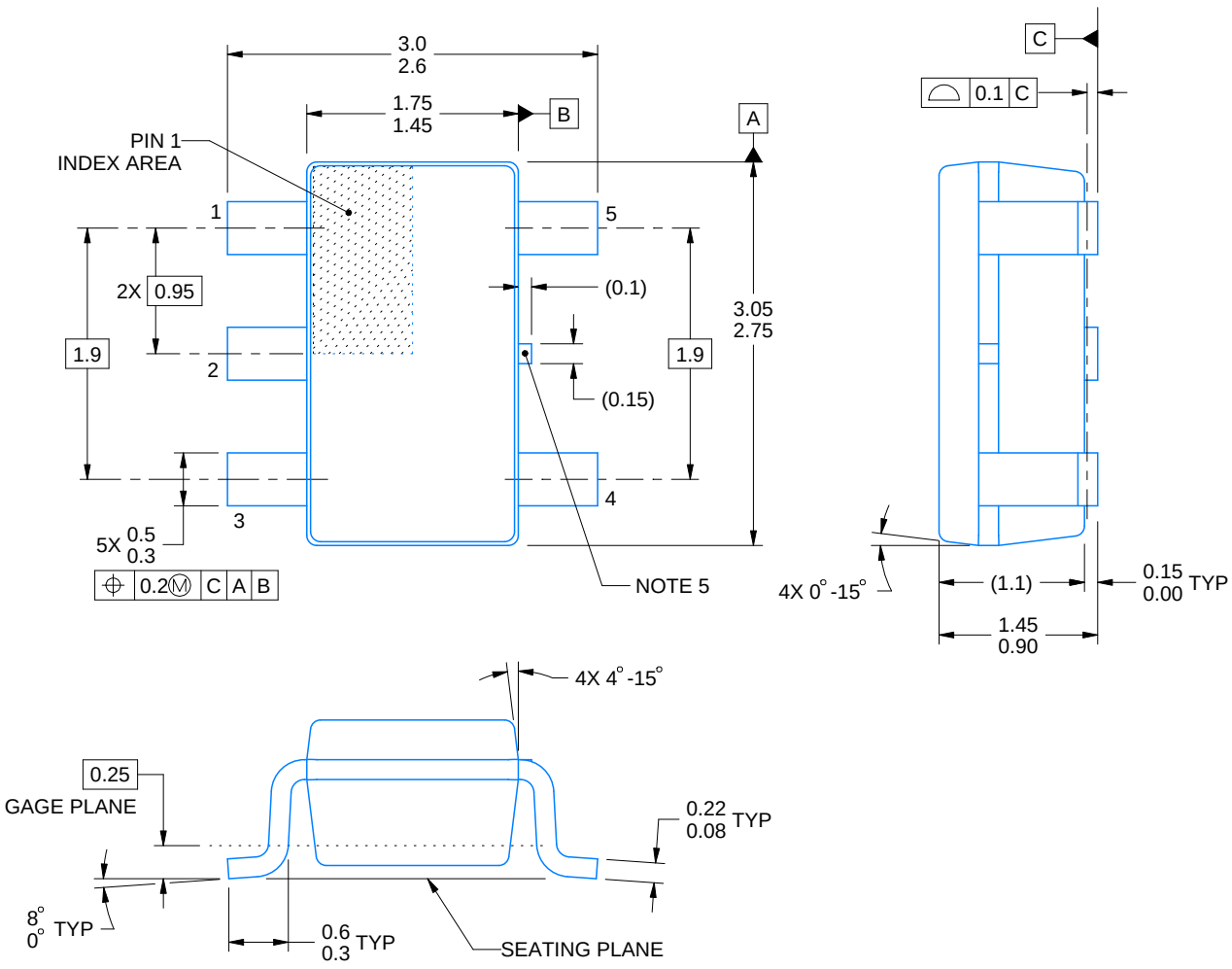

4214839/K 08/2024

NOTES:

1. All linear dimensions are in millimeters. Any dimensions in parenthesis are for reference only. Dimensioning and tolerancing per ASME Y14.5M.
2. This drawing is subject to change without notice.
3. Refernce JEDEC MO-178.
4. Body dimensions do not include mold flash, protrusions, or gate burrs. Mold flash, protrusions, or gate burrs shall not exceed 0.25 mm per side.
5. Support pin may differ or may not be present.

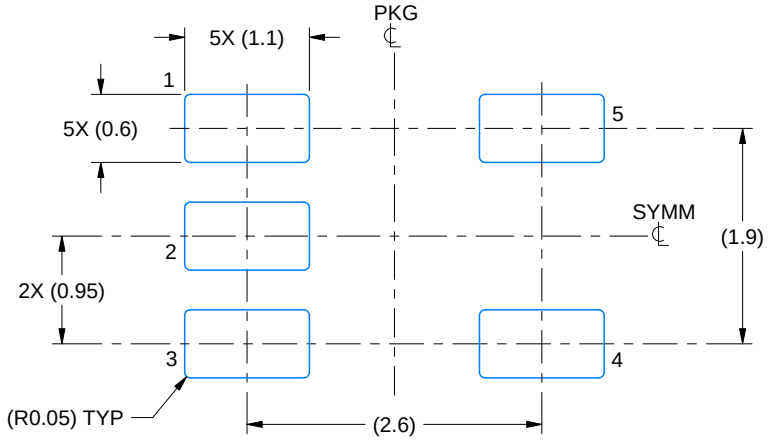

LAND PATTERN EXAMPLE
EXPOSED METAL SHOWN
SCALE:15X

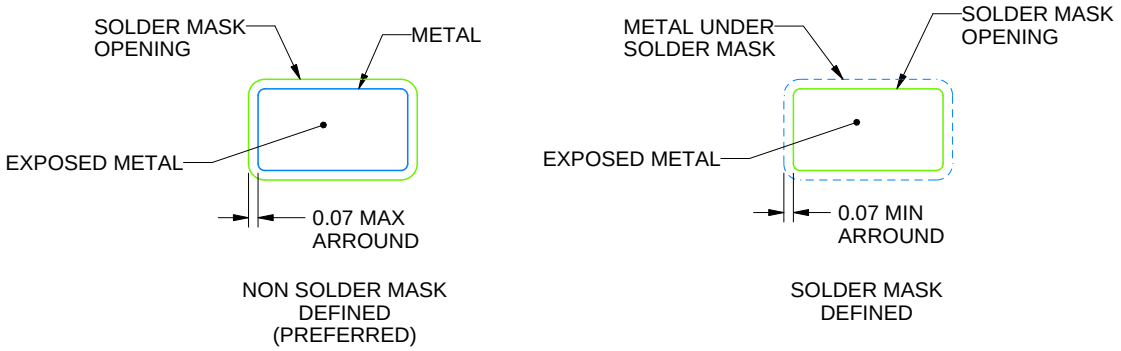

SOLDER MASK DETAILS

4214839/K 08/2024

NOTES: (continued)

6. Publication IPC-7351 may have alternate designs.
7. Solder mask tolerances between and around signal pads can vary based on board fabrication site.

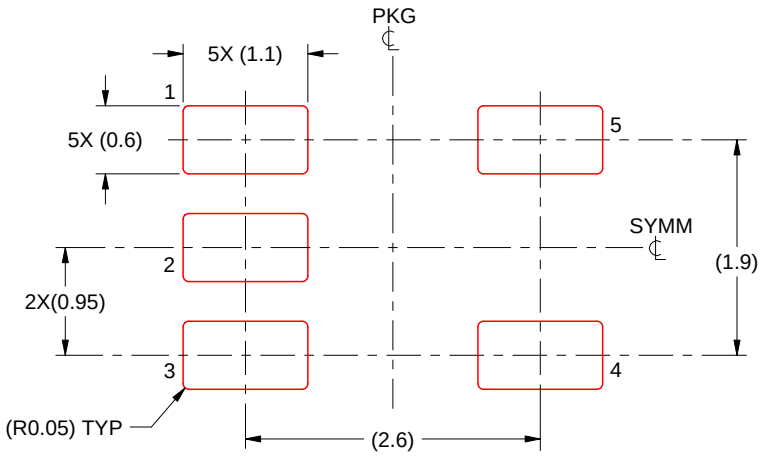

SOLDER PASTE EXAMPLE
BASED ON 0.125 mm THICK STENCIL
SCALE:15X

4214839/K 08/2024

NOTES: (continued)

8. Laser cutting apertures with trapezoidal walls and rounded corners may offer better paste release. IPC-7525 may have alternate design recommendations.
9. Board assembly site may have different recommendations for stencil design.

PACKAGE OUTLINE

DGK0008A

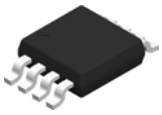

VSSOP - 1.1 mm max height

SMALL OUTLINE PACKAGE

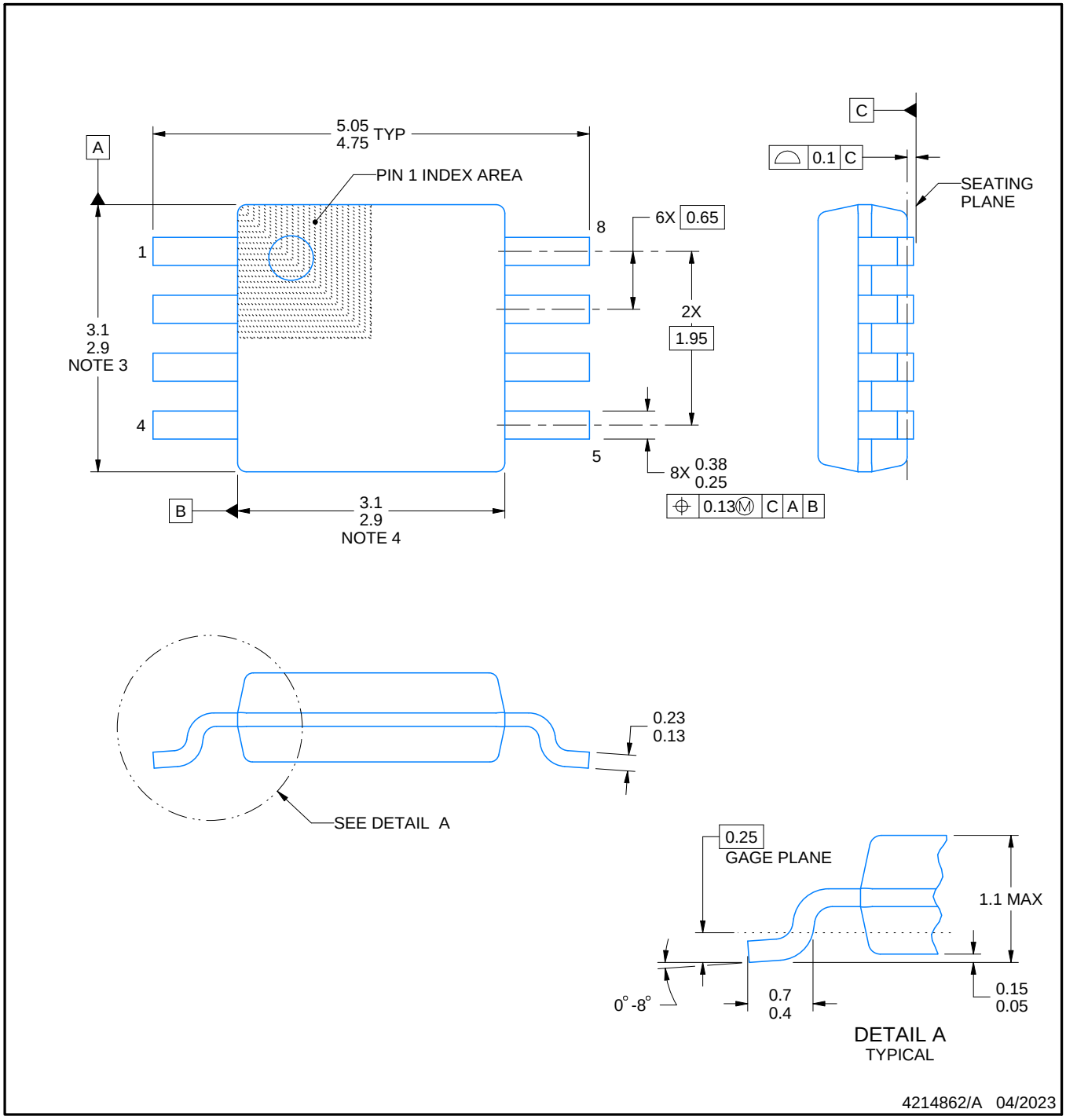

PowerPAD is a trademark of Texas Instruments.

NOTES:

1. All linear dimensions are in millimeters. Any dimensions in parenthesis are for reference only. Dimensioning and tolerancing per ASME Y14.5M.
2. This drawing is subject to change without notice.
3. This dimension does not include mold flash, protrusions, or gate burrs. Mold flash, protrusions, or gate burrs shall not exceed 0.15 mm per side.
4. This dimension does not include interlead flash. Interlead flash shall not exceed 0.25 mm per side.
5. Reference JEDEC registration MO-187.

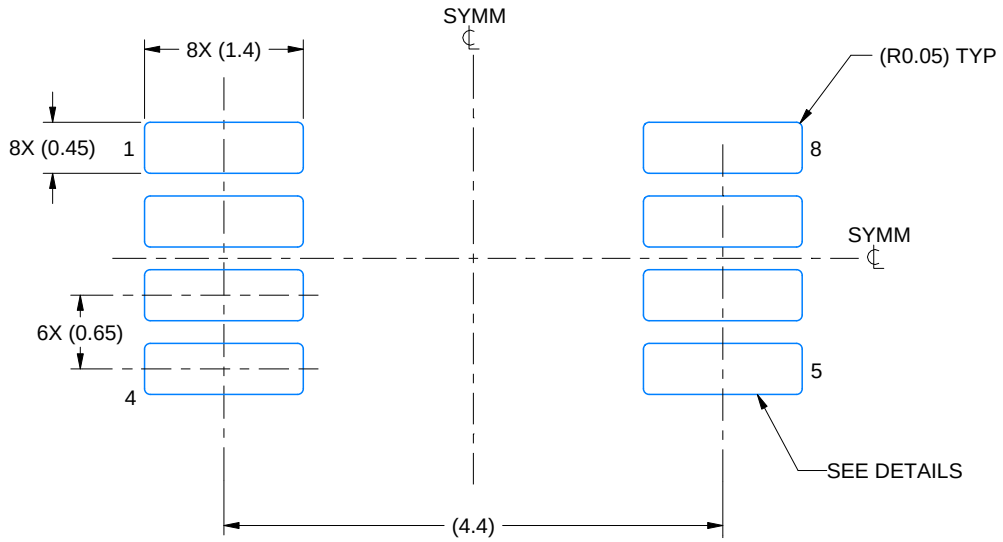

LAND PATTERN EXAMPLE
EXPOSED METAL SHOWN
SCALE: 15X

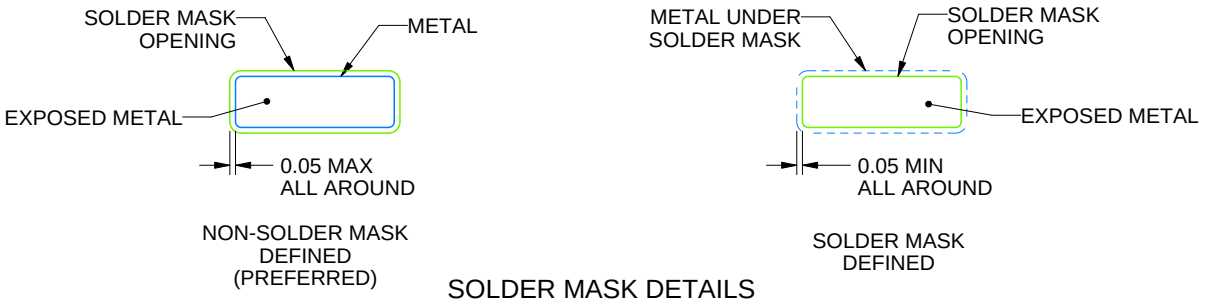

SOLDER MASK DETAILS

4214862/A 04/2023

NOTES: (continued)

6. Publication IPC-7351 may have alternate designs.
7. Solder mask tolerances between and around signal pads can vary based on board fabrication site.
8. Vias are optional depending on application, refer to device data sheet. If any vias are implemented, refer to their locations shown on this view. It is recommended that vias under paste be filled, plugged or tented.
9. Size of metal pad may vary due to creepage requirement.

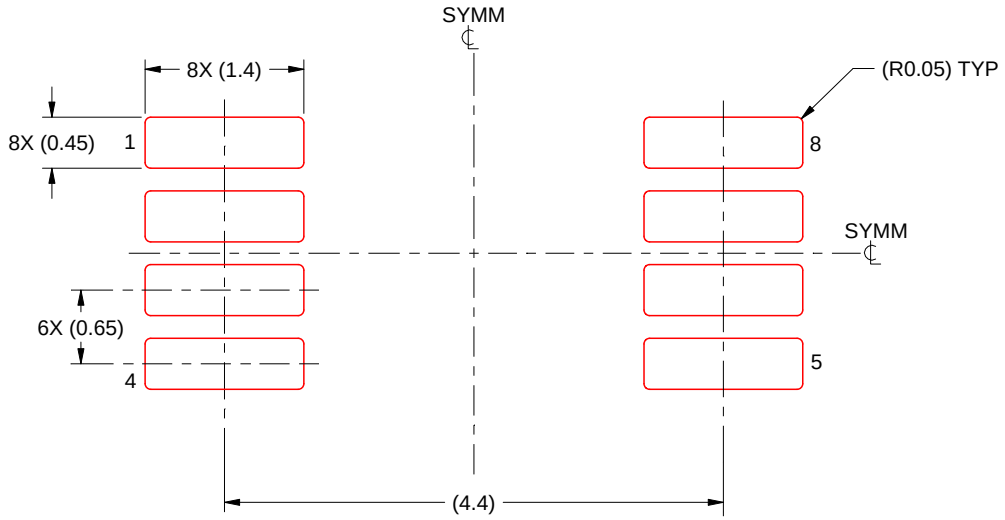

SOLDER PASTE EXAMPLE
SCALE: 15X

4214862/A 04/2023

NOTES: (continued)

11. Laser cutting apertures with trapezoidal walls and rounded corners may offer better paste release. IPC-7525 may have alternate design recommendations.
12. Board assembly site may have different recommendations for stencil design.

重要通知和免责声明

TI“按原样”提供技术和可靠性数据（包括数据表）、设计资源（包括参考设计）、应用或其他设计建议、网络工具、安全信息和其他资源，不保证没有瑕疵且不做出任何明示或暗示的担保，包括但不限于对适销性、与某特定用途的适用性或不侵犯任何第三方知识产权的暗示担保。

这些资源可供使用 TI 产品进行设计的熟练开发人员使用。您将自行承担以下全部责任：(1) 针对您的应用选择合适的 TI 产品，(2) 设计、验证并测试您的应用，(3) 确保您的应用满足相应标准以及任何其他安全、安保法规或其他要求。

这些资源如有变更，恕不另行通知。TI 授权您仅可将这些资源用于研发本资源所述的 TI 产品的相关应用。严禁以其他方式对这些资源进行复制或展示。您无权使用任何其他 TI 知识产权或任何第三方知识产权。对于因您对这些资源的使用而对 TI 及其代表造成的任何索赔、损害、成本、损失和债务，您将全额赔偿，TI 对此概不负责。

TI 提供的产品受 TI 销售条款)、TI 通用质量指南 或 ti.com 上其他适用条款或 TI 产品随附的其他适用条款的约束。TI 提供这些资源并不会扩展或以其他方式更改 TI 针对 TI 产品发布的适用的担保或担保免责声明。 除非德州仪器 (TI) 明确将某产品指定为定制产品或客户特定产品，否则其产品均为按确定价格收入目录的标准通用器件。

TI 反对并拒绝您可能提出的任何其他或不同的条款。

版权所有 © 2026，德州仪器 (TI) 公司

最后更新日期：2025 年 10 月