TCA6424A 低电压 24 位 I²C 和 SMBus I/O 扩展器 具有中断输出、复位和配置寄存器

1 特性

- 工作电源电压范围为 1.65 V 至 5.5 V
- 允许下列端口间的双向电压电平转换和 GPIO 扩展：
  - 1.8V SCL/SDA 和 1.8V、2.5V、3.3V 或 5V P 端口
  - 2.5V SCL/SDA 和 1.8V、2.5V、3.3V 或 5V P 端口
  - 3.3V SCL/SDA 和 1.8V、2.5V、3.3V 或 5V P 端口
  - 5V SCL/SDA 和 1.8V，2.5V，3.3V 或 5V P 端口
- I²C 至并行端口扩展器
- 1 μA 的低待机流耗
- 施密特触发操作支持在 SCL 和 SDA 输入端实现缓慢输入转换并提升开关噪声抗扰度
  - 1.8V 时，V_{hys} = 0.18V（典型值）
  - 2.5V 时，V_{hys} = 0.25V（典型值）
  - 3.3V 时，V_{hys} = 0.33V（典型值）
  - 5V 时，V_{hys} = 0.5V（典型值）
- 可耐受 5V 电压的 I/O 端口
- 低电平有效复位输入 ($\overline{RESET}$)
- 开漏低电平有效中断输出 ($\overline{INT}$)
- 400kHz 快速 I²C 总线
- 输入/输出配置寄存器
- 极性反转寄存器
- 内部上电复位
- 在所有通道均配置为输入的情况下上电
- 加电时无干扰
- SCL/SDA 输入端上的噪声滤波器
- 具有最大高电流驱动能力的锁存输出，适用于直接驱动 LED
- 闩锁性能超过 100mA，符合 JESD 78 II 类规范的要求
- ESD 保护性能超过 JESD 22 规范要求
  - 2000V 人体放电模型 (A114-A)
  - 200V 机器放电模型 (A115-A)
  - 1000V 充电器件模型 (C101)

2 说明

这款针对两线制双向总线 (IC) 的 24 位 I/O 扩展器被设计成通过 I²C 接口 [串行时钟 (SCL) 和串行数据 (SDA)] 为大多数微控制器系列提供通用远程 I/O 扩展。

该器件的主要优势是其宽 V_{CC} 范围。在 P 端口侧和 SDA/SCL 侧，它能够在 1.65V 至 5.5V 的电压范围内运行。这使得 TCA6424A 能够在 SDA/SCL 侧（在这里，电源电平正在降低以节约能耗）与下一代微处理器和微控制器相连接。与微处理器和微控制器的电源电压不断走低不同，有些印刷电路板 (PCB) 组件（例如 LED）保持在 5V 电源上。

封装信息

器件名称	封装(1)	封装尺寸
TCA6424A	超薄四方扁平无引线 (UQFN) (32)	5.00mm × 5.00mm

(1) 如需了解所有可用封装，请参阅数据表末尾的可订购产品附录。

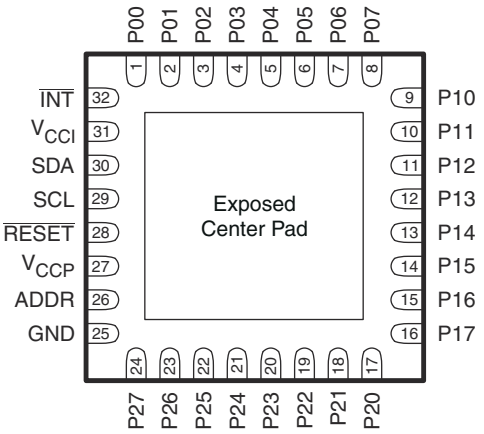

如果使用，那么裸露的中央散热焊盘必须作为一个辅助地进行连接或置于电开路状态。

RGJ 封装（底视图）

本文档旨在为方便起见，提供有关 TI 产品中文版本的信息，以确认产品的概要。有关适用的官方英文版本的最新信息，请访问 www.ti.com，其内容始终优先。TI 不保证翻译的准确性和有效性。在实际设计之前，请务必参考最新版本的英文版本。

Table of Contents

1 特性 1
2 说明 1
3 Revision History 2
4 Description (continued) 3
5 Pin Configuration and Functions 4
6 Specifications 6
6.1 Absolute Maximum Ratings(1) 6
6.2 ESD Ratings 6
6.3 Recommended Operating Conditions 6
6.4 Thermal Information 7
6.5 Electrical Characteristics 7
6.6 I^2C Interface Timing Requirements 8
6.7 Reset Timing Requirements 9
6.8 Switching Characteristics 9
6.9 Typical Characteristics 10
7 Parameter Measurement Information 13
8 Detailed Description 17
8.1 Overview 17
8.2 Functional Block Diagram 17
8.3 Feature Description 18
8.4 Device Functional Modes 20
8.5 Programming 20
8.6 Register Maps 23
9 Application and Implementation 27
9.1 Typical Application 27
9.2 Power Supply Recommendation 28
10 Device and Documentation Support 31
10.1 Receiving Notification of Documentation Updates 31
10.2 支持资源 31
10.3 商标 31
10.4 静电放电警告 31
10.5 术语表 31

3 Revision History

Changes from Revision C (April 2014) to Revision D (January 2023) — **Page**

- 删除了对 RSM 封装的所有引用 1
- 将提到 I^2C 的旧术语实例通篇更改为控制器和目标 1
- Deleted Package thermal impedance from the *Absolute Maximum Ratings* table 6
- Added Storage temperature range to the *Absolute Maximum Ratings* table 6
- Changed Handling Ratings To: *ESD Ratings* 6
- Added the *Thermal Information* table 7
- Added the *Application and Implementation* NOTE 27
- Added the *Detailed Design Procedure* section 27
- Added paragraph: "Ramping up the device V_{CCP}" to *Power Supply Recommendations* 28

Changes from Revision B (September 2010) to Revision C (April 2014) — **Page**

- 已删除硬编码的订购信息表 1
- 更新了文档格式 1

Changes from Revision A (August 2010) to Revision B (September 2010) — **Page**

- 已对文档进行修改，将文档状态从预发布更新为量产数据 1

Changes from Revision * (July 2010) to Revision A (August 2010) — **Page**

- Changed Recommended Supply Sequencing and Rates Table 28

Copyright © 2023 Texas Instruments Incorporated

4 Description (continued)

The bidirectional voltage level translation in the TCA6424A is provided through V_{CCI}. V_{CCI} should be connected to the V_{CC} of the external SCL/SDA lines. This indicates the V_{CC} level of the I^2C bus to the TCA6424A. The voltage level on the P-port of the TCA6424A is determined by the V_{CCP}.

The TCA6424A consists of three 8-bit Configuration (input or output selection), Input, Output, and Polarity Inversion (active high) registers. At power on, the I/Os are configured as inputs. However, the system controller can enable the I/Os as either inputs or outputs by writing to the I/O configuration bits. The data for each input or output is kept in the corresponding input or output register. The polarity of the Input Port register can be inverted with the Polarity Inversion register. All registers can be read by the system controller.

The system controller can reset the TCA6424A in the event of a timeout or other improper operation by asserting a low in the $\overline{RESET}$ input. The power-on reset puts the registers in their default state and initializes the I^2C/SMBus state machine. The $\overline{RESET}$ pin causes the same reset/initialization to occur without depowering the part.

The TCA6424A open-drain interrupt ($\overline{INT}$) output is activated when any input state differs from its corresponding Input Port register state and is used to indicate to the system controller that an input state has changed.

$\overline{INT}$ can be connected to the interrupt input of a microcontroller. By sending an interrupt signal on this line, the remote I/O can inform the microcontroller if there is incoming data on its ports without having to communicate via the I^2C bus. Thus, the TCA6424A can remain a simple target device.

The device P-port outputs have high-current sink capabilities for directly driving LEDs while consuming low device current.

One hardware pin (ADDR) can be used to program and vary the fixed I^2C address and allow up to two devices to share the same I^2C bus or SMBus.

Copyright © 2023 Texas Instruments Incorporated

5 Pin Configuration and Functions

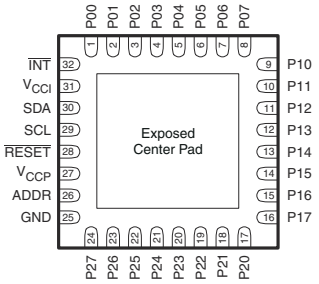

If used, the exposed center pad must be connected as a secondary ground or left electrically open.

图 5-1. RGJ Package (Bottom View)

表 5-1. Pin Functions

PIN		DESCRIPTION
PIN NO.	NAME	
1	P00	P-port input/output (push-pull design structure). At power on, P00 is configured as an input.
2	P01	P-port input/output (push-pull design structure). At power on, P01 is configured as an input.
3	P02	P-port input/output (push-pull design structure). At power on, P02 is configured as an input.
4	P03	P-port input/output (push-pull design structure). At power on, P03 is configured as an input.
5	P04	P-port input/output (push-pull design structure). At power on, P04 is configured as an input.
6	P05	P-port input/output (push-pull design structure). At power on, P05 is configured as an input.
7	P06	P-port input/output (push-pull design structure). At power on, P06 is configured as an input.
8	P07	P-port input/output (push-pull design structure). At power on, P07 is configured as an input.
9	P10	P-port input/output (push-pull design structure). At power on, P10 is configured as an input.
10	P11	P-port input/output (push-pull design structure). At power on, P11 is configured as an input.
11	P12	P-port input/output (push-pull design structure). At power on, P12 is configured as an input.
12	P13	P-port input/output (push-pull design structure). At power on, P13 is configured as an input.
13	P14	P-port input/output (push-pull design structure). At power on, P14 is configured as an input.
14	P15	P-port input/output (push-pull design structure). At power on, P15 is configured as an input.
15	P16	P-port input/output (push-pull design structure). At power on, P16 is configured as an input.
16	P17	P-port input/output (push-pull design structure). At power on, P17 is configured as an input.
17	P20	P-port input/output (push-pull design structure). At power on, P20 is configured as an input.
18	P21	P-port input/output (push-pull design structure). At power on, P21 is configured as an input.
19	P22	P-port input/output (push-pull design structure). At power on, P22 is configured as an input.
20	P23	P-port input/output (push-pull design structure). At power on, P23 is configured as an input.
21	P24	P-port input/output (push-pull design structure). At power on, P24 is configured as an input.
22	P25	P-port input/output (push-pull design structure). At power on, P25 is configured as an input.
23	P26	P-port input/output (push-pull design structure). At power on, P26 is configured as an input.
24	P27	P-port input/output (push-pull design structure). At power on, P27 is configured as an input.
25	GND	Ground
26	ADDR	Address input. Connect directly to V_{CCP} or ground.
27	V_{CCP}	Supply voltage of TCA6424A for P port
28	$\overline{RESET}$	Active-low reset input. Connect to V_{CCI} through a pullup resistor, if no active connection is used.
29	SCL	Serial clock bus. Connect to V_{CCI} through a pullup resistor.
30	SDA	Serial data bus. Connect to V_{CCI} through a pullup resistor.

Copyright © 2023 Texas Instruments Incorporated

表 5-1. Pin Functions (continued)

PIN		DESCRIPTION
PIN NO.	NAME	
31	V_{CCI}	Supply voltage of I^2C bus. Connect directly to the V_{CC} of the external I^2C controller. Provides voltage-level translation.
32	$\overline{INT}$	Interrupt output. Connect to V_{CCI} through a pullup resistor.

6 Specifications

6.1 Absolute Maximum Ratings[1]

over operating free-air temperature range (unless otherwise noted)

				MIN	MAX	UNIT
V_{CCI}	Supply voltage range			– 0.5	6.5	V
V_{CCP}	Supply voltage range			– 0.5	6.5	V
V_I	Input voltage range[2]			– 0.5	6.5	V
V_O	Output voltage range[2]			– 0.5	6.5	V
I_{IK}	Input clamp current	ADDR, $\overline{RESET}$, SCL	$V_I < 0$		±20	mA
I_{OK}	Output clamp current	$\overline{INT}$	$V_O < 0$		±20	mA
I_{IOK}	Input/output clamp current	P port	$V_O < 0$ or $V_O > V_{CCP}$		±20	mA
		SDA	$V_O < 0$ or $V_O > V_{CCI}$		±20	
I_{OL}	Continuous output low current	P port	$V_O = 0$ to V_{CCP}		25	mA
		SDA, $\overline{INT}$	$V_O = 0$ to V_{CCI}		15	
I_{OH}	Continuous output high current	P port	$V_O = 0$ to V_{CCP}		25	mA
I_{CC}	Continuous current through GND				200	mA
	Continuous current through V_{CCP}				160	
	Continuous current through V_{CCI}				10	
T_{stg}	Storage temperature range			– 65	150	°C

(1) Stresses beyond those listed under *Absolute Maximum Ratings* may cause permanent damage to the device. These are stress ratings only, and functional operation of the device at these or any other conditions beyond those indicated under *Recommended Operating Conditions* is not implied. Exposure to absolute-maximum-rated conditions for extended periods may affect device reliability.
(2) The input negative-voltage and output voltage ratings may be exceeded if the input and output current ratings are observed.

6.2 ESD Ratings

			MIN	MAX	UNIT
$V_{(ESD)}$	Electrostatic discharge	Human body model (HBM), per ANSI/ESDA/JEDEC JS-001, all pins[1]	0	2	kV
		Charged device model (CDM), per JEDEC specification JESD22-C101, all pins[2]	0	01	kV

(1) JEDEC document JEP155 states that 500-V HBM allows safe manufacturing with a standard ESD control process. Pins listed as 2000 V may actually have higher performance.
(2) JEDEC document JEP157 states that 250-V CDM allows safe manufacturing with a standard ESD control process. Pins listed as 2000 V may actually have higher performance.

6.3 Recommended Operating Conditions

			MIN	MAX	UNIT
V_{CCI}	Supply voltage		1.65	5.5	V
V_{CCP}	Supply voltage		1.65	5.5	V
V_{IH}	High-level input voltage	SCL, SDA	$0.7 \times V_{CCI}$	VCCI	V
		$\overline{RESET}$	$0.7 \times V_{CCI}$	5.5	
		ADDR, P27 – P00	$0.7 \times V_{CCP}$	5.5	
V_{IL}	Low-level input voltage	SCL, SDA, $\overline{RESET}$	– 0.5	$0.3 \times V_{CCI}$	V
		ADDR, P27 – P00	– 0.5	$0.3 \times V_{CCP}$	
I_{OH}	High-level output current	P27 – P00		10	mA
I_{OL}	Low-level output current	P27 – P00		25	mA
T_A	Operating free-air temperature		– 40	85	°C

Copyright © 2023 Texas Instruments Incorporated

6.4 Thermal Information

THERMAL METRIC[1]		TCA6424A RGJ (UQFN) 32 PINS	UNIT
$R_{\theta JA}$	Junction-to-ambient thermal resistance	44.9	°C/W
$R_{\theta JC(top)}$	Junction-to-case (top) thermal resistance	14.3	°C/W
$R_{\theta JB}$	Junction-to-board thermal resistance	17.7	°C/W
ψ_{JT}	Junction-to-top characterization parameter	0.3	°C/W
ψ_{JB}	Junction-to-board characterization parameter	17.7	°C/W
$R_{\theta JC(bottom)}$	Junction-to-case (bottom) thermal resistance	9.1	°C/W

(1) For more information about traditional and new thermal metrics, see the *Semiconductor and IC Package Thermal Metrics* application report.

6.5 Electrical Characteristics

over recommended operating free-air temperature range, V_{CCI} = 1.65 V to 5.5 V (unless otherwise noted)

PARAMETER		TEST CONDITIONS	V_{CCP}	MIN	TYP[1]	MAX	UNIT
V_{IK}	Input diode clamp voltage	I_I = –18 mA	1.65 V to 5.5 V	–1.2			V
V_{POR}	Power-on reset voltage	$V_I = V_{CCP}$ or GND, I_O = 0	1.65 V to 5.5 V		1	1.4	V
V_{OH}	P-port high-level output voltage	I_{OH} = –8 mA	1.65 V	1.2			V
			2.3 V	1.8			
			3 V	2.6			
			4.5 V	4.1			
		I_{OH} = –10 mA	1.65 V	1			
			2.3 V	1.7			
			3 V	2.5			
			4.5 V	4.0			
V_{OL}	P-port low-level output voltage	I_{OL} = 8mA	1.65 V			0.45	V
			2.3 V			0.25	
			3 V			0.25	
			4.5 V			0.23	
		I_{OL} = 10 mA	1.65 V			0.6	
			2.3 V			0.3	
			3 V			0.25	
			4.5 V			0.24	
I_{OL}	SDA	V_{OL} = 0.4 V	1.65 V to 5.5 V	3			mA
	$\overline{INT}$	V_{OL} = 0.4 V	1.65 V to 5.5 V	3	15		
I_I	SCL, SDA, $\overline{RESET}$	$V_I = V_{CCI}$ or GND	1.65 V to 5.5 V			±0.1	µA
	ADDR	$V_I = V_{CCP}$ or GND				±0.1	
I_{IH}	P port	$V_I = V_{CCP}$	1.65 V to 5.5 V			1	µA
I_{IL}	P port	V_I = GND				1	µA

6.5 Electrical Characteristics (continued)

over recommended operating free-air temperature range, V_{CCI} = 1.65 V to 5.5 V (unless otherwise noted)

PARAMETER			TEST CONDITIONS	V_{CCP}	MIN	TYP(1)	MAX	UNIT
I_{CC} (I_{CCP} + I_{CCI})	Operating mode	SDA, P port, ADDR, $\overline{RESET}$	V_I on SDA and $\overline{RESET}$= V_{CCI} or GND, V_I on P port and ADDR = V_{CCP}, I_O = 0, I/O = inputs, f_{SCL} = 400 kHz	1.65 V to 5.5 V		8	30	µA
		SDA, P port, ADDR, $\overline{RESET}$	V_I on SDA and $\overline{RESET}$= V_{CCI} or GND, V_I on P port and ADDR = V_{CCP}, I_O = 0, I/O = inputs, f_{SCL} = 100 kHz	1.65 V to 5.5 V		1.7	10	
	Standby mode	SCL, SDA, P port, ADDR, $\overline{RESET}$	V_I on SCL, SDA and $\overline{RESET}$ = V_{CCI} or GND, V_I on P port and ADDR = V_{CCP}, I_O = 0, I/O = inputs, f_{SCL} = 0	1.65 V to 5.5 V		0.1	3	
ΔI_{CCI}	Additional current in Standby mode	SCL,SDA $\overline{RESET}$	One input at V_{CCI} – 0.6 V, Other inputs at V_{CCI} or GND	1.65 V to 5.5 V			25	µA
ΔI_{CCP}		P port, ADDR,	One input at V_{CCP} – 0.6 V, Other inputs at V_{CCP} or GND				60	
C_I	SCL		V_I = V_{CCI} or GND	1.65 V to 5.5 V		6	7	pF
C_{io}	SDA		V_{IO} = V_{CCI} or GND	1.65 V to 5.5 V		7	8	pF
	P port		V_{IO} = V_{CCP} or GND			7.5	8.5	

(1) Except for I_{CC}, all typical values are at nominal supply voltage (V_{CCP} = V_{CCI} =1.8-V, 2.5-V, 3.3-V, or 5-V V_{CC}) and T_A = 25°C. For I_{CC}, all typical values are at V_{CCP} = V_{CCI} = 3.3 V and T_A = 25°C.

6.6 I²C Interface Timing Requirements

over recommended operating free-air temperature range (unless otherwise noted) (see 图 7-1)

		STANDARD MODE I²C BUS		FAST MODE I²C BUS		UNIT
		MIN	MAX	MIN	MAX	
f_{scl}	I²C clock frequency	0	100	0	400	kHz
t_{sch}	I²C clock high time	4		0.6		µs
t_{scl}	I²C clock low time	4.7		1.3		µs
t_{sp}	I²C spike time	0	50	0	50	ns
t_{sds}	I²C serial data setup time	250		100		ns
t_{sdh}	I²C serial data hold time	0		0		ns
t_{icr}	I²C input rise time		1000	20 + 0.1C_b (1)	300	ns
t_{icf}	I²C input fall time		300	20 + 0.1C_b (1)	300	ns
t_{ocf}	I²C output fall time; 10 pF to 400 pF bus		300	20 + 0.1C_b (1)	300	µs
t_{buf}	I²C bus free time between Stop and Start	4.7		1.3		µs
t_{sts}	I²C Start or repeater Start condition setup time	4.7		0.6		µs
t_{sth}	I²C Start or repeater Start condition hold time	4		0.6		µs
t_{sps}	I²C Stop condition setup time	4		0.6		µs
$t_{vd(data)}$	Valid data time; SCL low to SDA output valid		1		1	µs

Copyright © 2023 Texas Instruments Incorporated

6.6 I²C Interface Timing Requirements (continued)

over recommended operating free-air temperature range (unless otherwise noted) (see 图 7-1)

		STANDARD MODE I²C BUS		FAST MODE I²C BUS		UNIT
		MIN	MAX	MIN	MAX	
$t_{vd(ack)}$	Valid data time of ACK condition; ACK signal from SCL low to SDA (out) low		1		1	µs

(1) C_b = total capacitance of one bus line in pF

6.7 Reset Timing Requirements

over recommended operating free-air temperature range (unless otherwise noted) (see 图 7-4)

		STANDARD MODE I²C BUS		FAST MODE I²C BUS		UNIT
		MIN	MAX	MIN	MAX	
t_W	Reset pulse duration	4		4		ns
t_{REC}	Reset recovery time	0		0		ns
t_{RESET}	Time to reset(1)	600		600		ns

(1) Minimum time for SDA to become high or minimum time to wait before doing a START.

6.8 Switching Characteristics

over recommended operating free-air temperature range, $C_L \leqslant 100$ pF (unless otherwise noted) (see 图 7-1)

PARAMETER		FROM	TO	STANDARD MODE I²C BUS		FAST MODE I²C BUS		UNIT
				MIN	MAX	MIN	MAX	
t_{IV}	Interrupt valid time	P port	$\overline{INT}$		4		4	µs
t_{IR}	Interrupt reset delay time	SCL	$\overline{INT}$		4		4	µs
t_{PV}	Output data valid	SCL	P27 – P00		400		400	ns
t_{PS}	Input data setup time	P port	SCL	0		0		ns
t_{PH}	Input data hold time	P port	SCL	300		300		ns

6.9 Typical Characteristics

T_A = 25°C (unless otherwise noted)

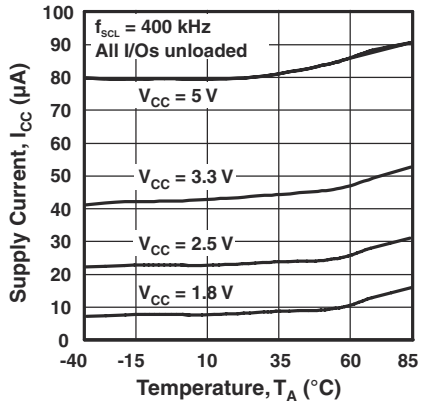

图 6-1. Supply Current vs Temperature

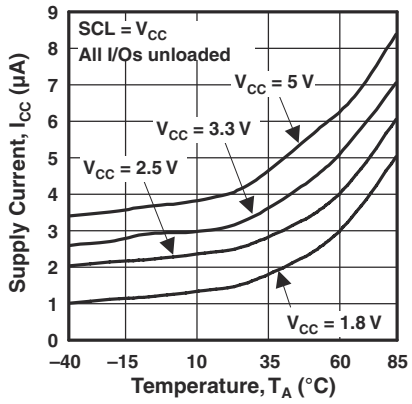

图 6-2. Standby Supply Current vs Temperature

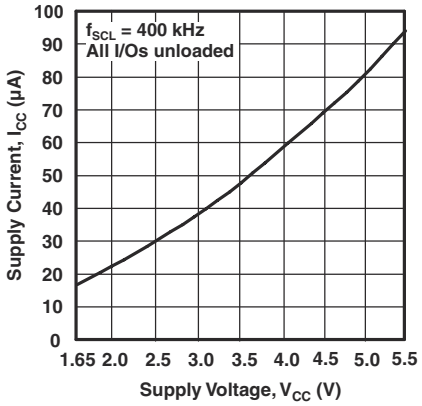

图 6-3. Supply Current vs Supply Voltage

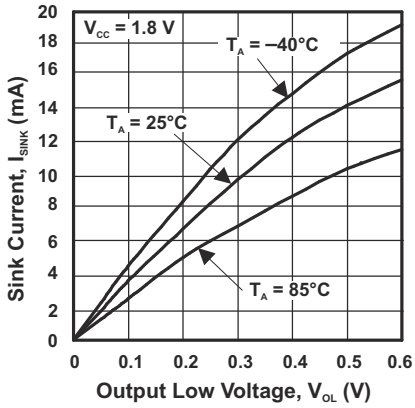

图 6-4. I/O Sink Current vs Output Low Voltage

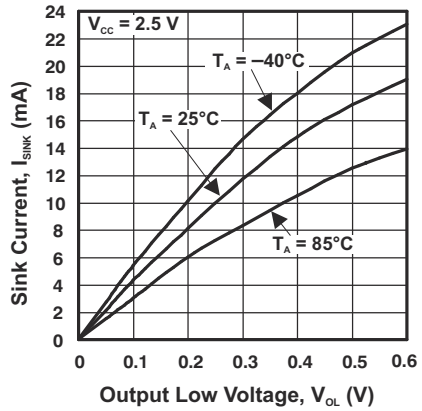

图 6-5. I/O Sink Current vs Output Low Voltage

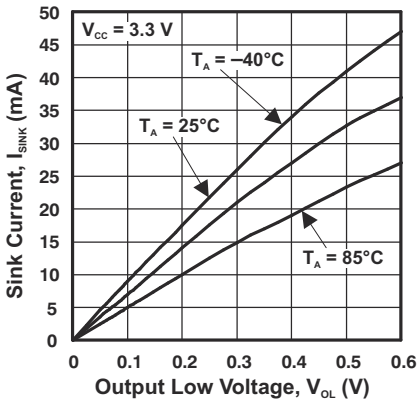

图 6-6. I/O Sink Current vs Output Low Voltage

Copyright © 2023 Texas Instruments Incorporated

6.9 Typical Characteristics (continued)

T_A = 25°C (unless otherwise noted)

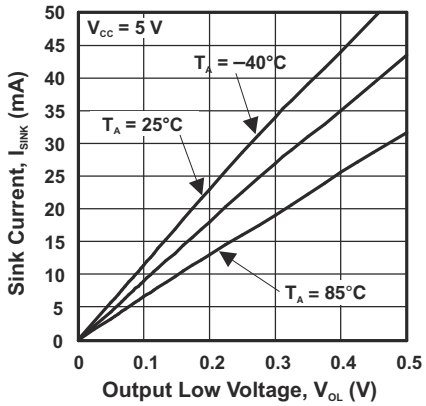

图 6-7. I/O Sink Current vs Output Low Voltage

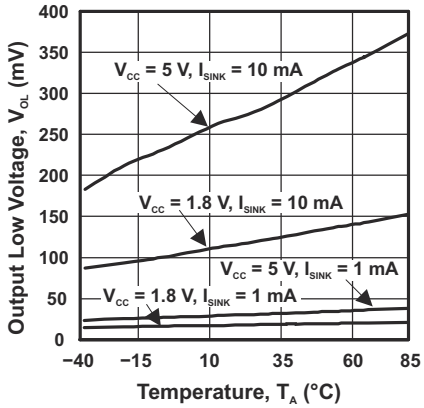

图 6-8. I/O Low Voltage vs Temperature

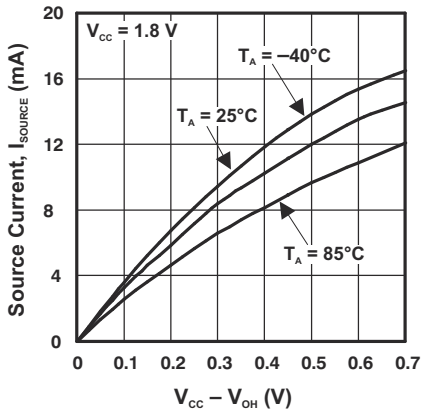

图 6-9. I/O Source Current vs Output High Voltage

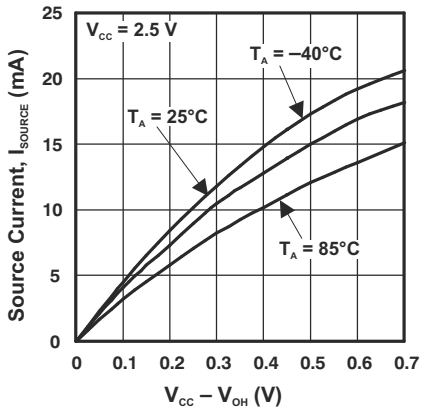

图 6-10. I/O Source Current vs Output High Voltage

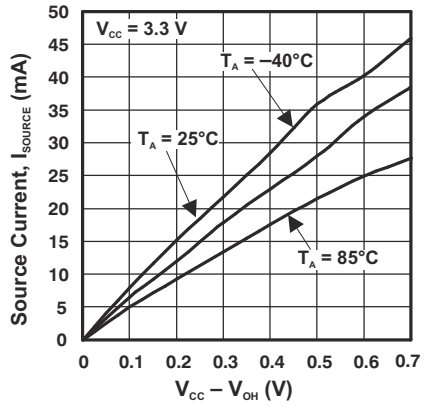

图 6-11. I/O Source Current vs Output High Voltage

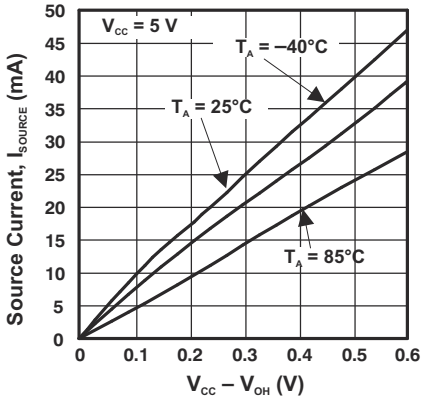

图 6-12. I/O Source Current vs Output High Voltage

6.9 Typical Characteristics (continued)

T_A = 25°C (unless otherwise noted)

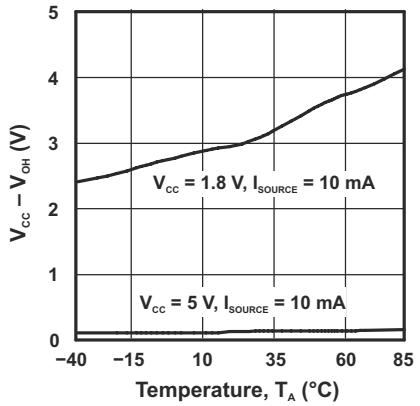

图 6-13. I/O High Voltage vs Temperature

Copyright © 2023 Texas Instruments Incorporated

7 Parameter Measurement Information

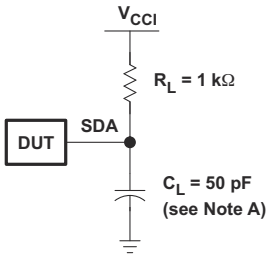

SDA LOAD CONFIGURATION

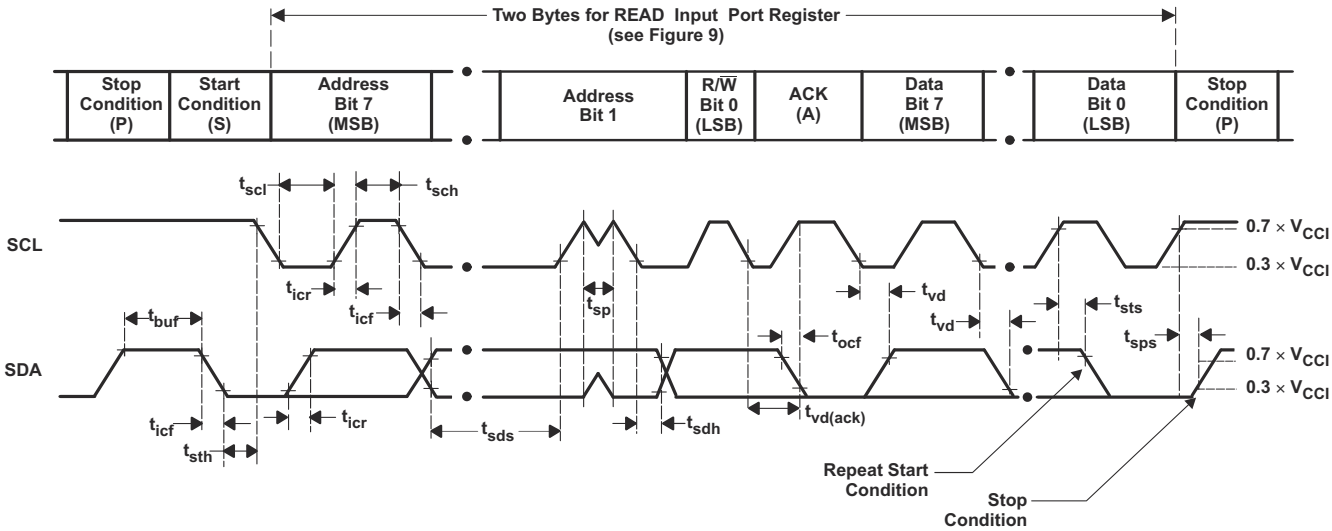

VOLTAGE WAVEFORMS

BYTE	DESCRIPTION
1	I^2C address
2	Input register port data

A. C_L includes probe and jig capacitance. tocf is measured with C_L of 10 pF or 400 pF.

B. All inputs are supplied by generators having the following characteristics: PRR ≤ 10 MHz, Z_O = 50 Ω, t_r/t_f ≤ 30 ns.

C. All parameters and waveforms are not applicable to all devices.

图 7-1. I^2C Interface Load Circuit and Voltage Waveforms

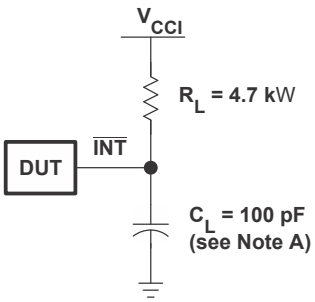

INTERRUPT LOAD CONFIGURATION

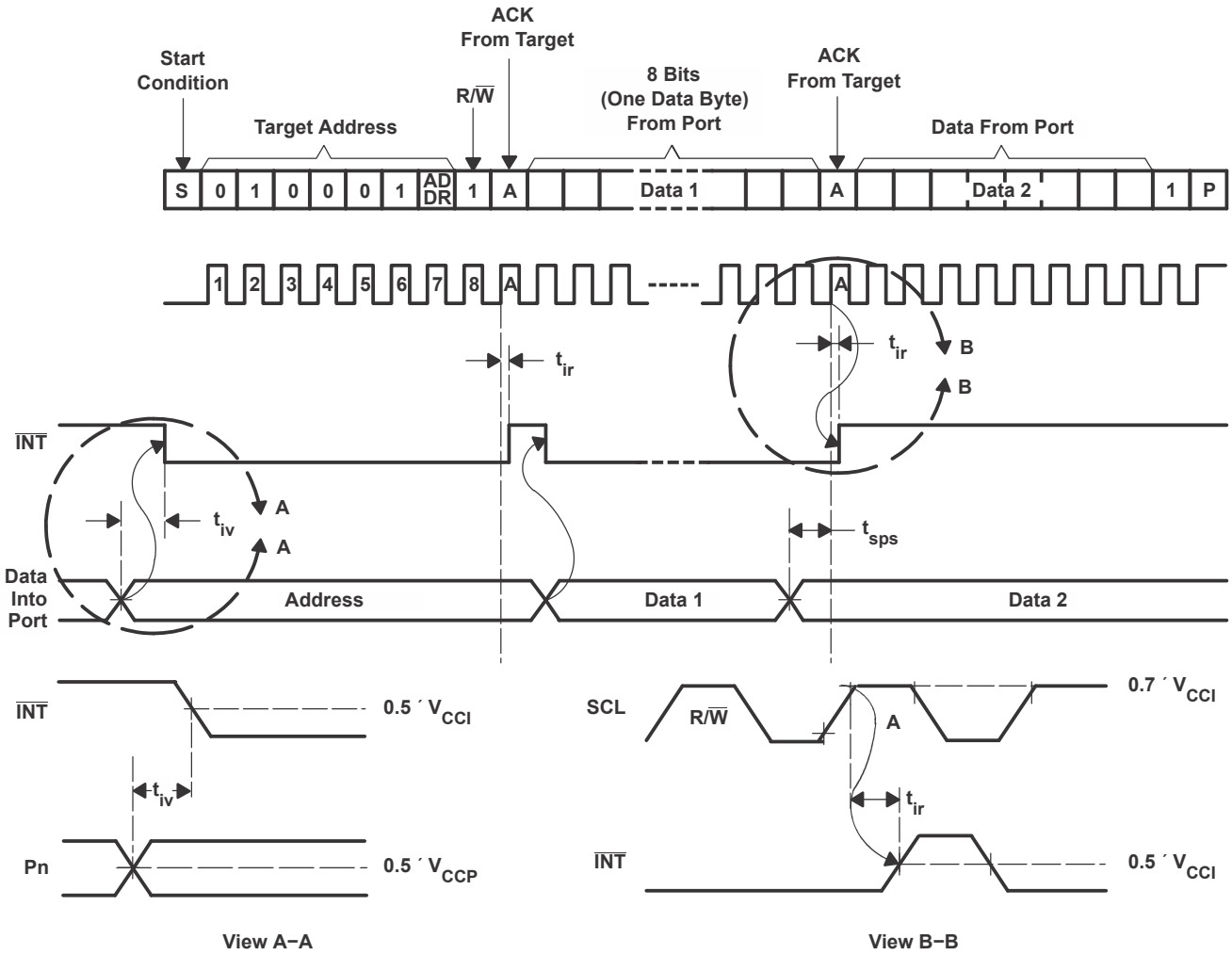

A. C_L includes probe and jig capacitance.
B. All inputs are supplied by generators having the following characteristics: PRR ≤ 10 MHz, Z_O = 50 Ω, t_r/t_f ≤ 30 ns.
C. All parameters and waveforms are not applicable to all devices.

图 7-2. Interrupt Load Circuit and Voltage Waveforms

Copyright © 2023 Texas Instruments Incorporated

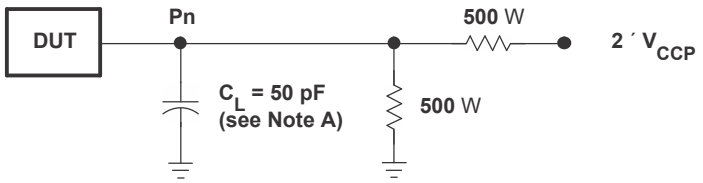

P PORT LOAD CONFIGURATION

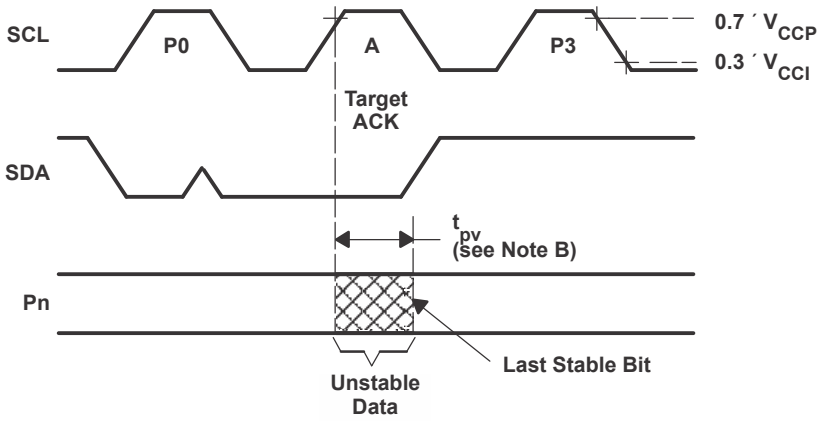

WRITE MODE (R/$\overline{W}$ = 0)

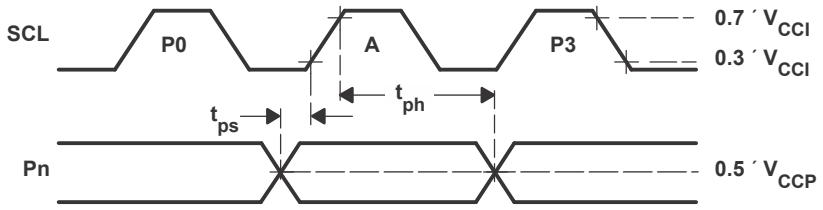

READ MODE (R/$\overline{W}$ = 1)

A. C_L includes probe and jig capacitance.
B. t_{pv} is measured from 0.7 × V_{CC} on SCL to 50% I/O (Pn) output.
C. All inputs are supplied by generators having the following characteristics: PRR ⩽ 10 MHz, Z_O = 50 Ω, t_r/t_f ⩽ 30 ns.
D. The outputs are measured one at a time, with one transition per measurement.
E. All parameters and waveforms are not applicable to all devices.

图 7-3. P-Port Load Circuit and Timing Waveforms

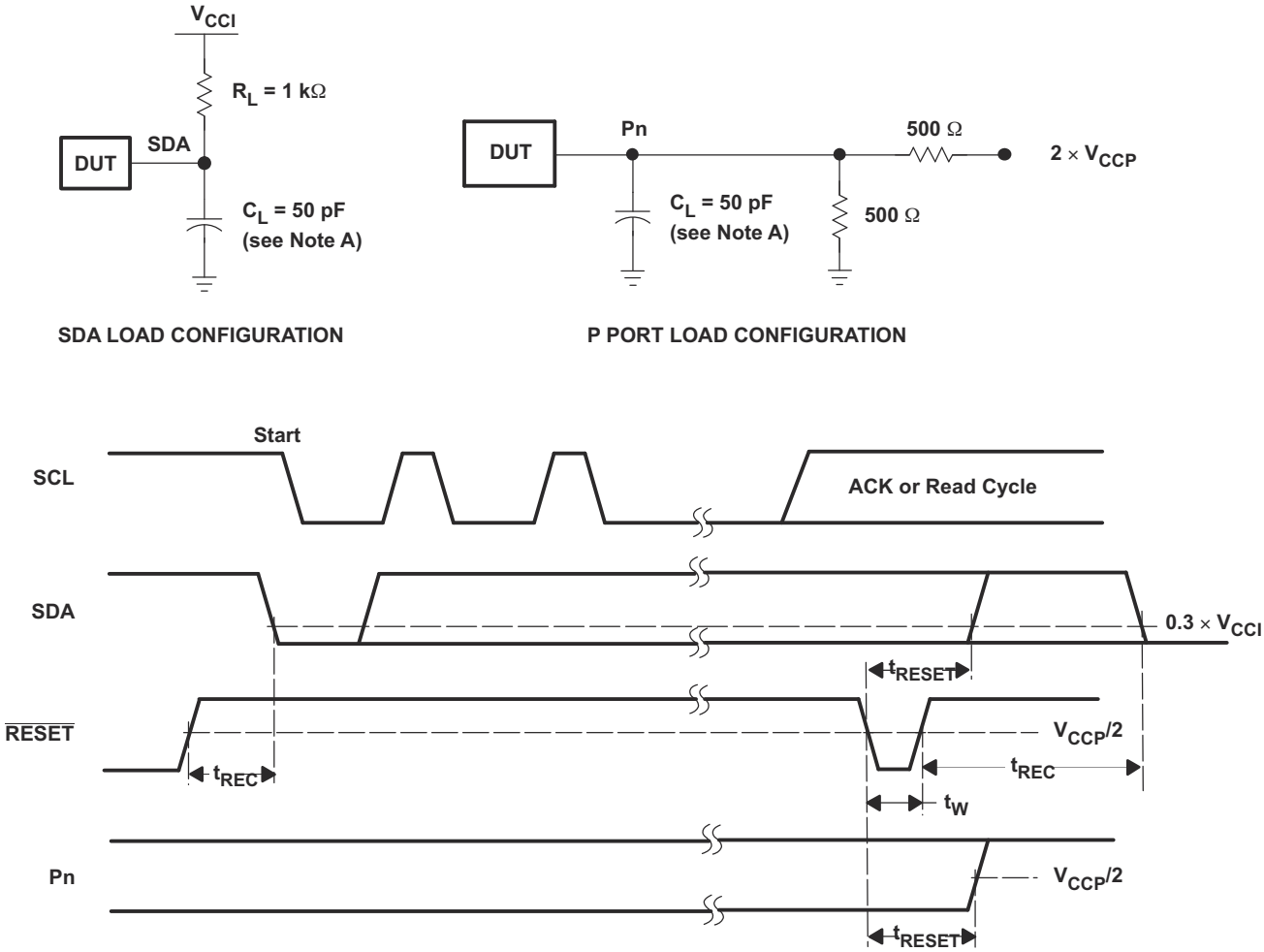

A. C_L includes probe and jig capacitance.
B. All inputs are supplied by generators having the following characteristics: PRR ≤ 10 MHz, Z_O = 50 Ω, t_r/t_f ≤ 30 ns.
C. The outputs are measured one at a time, with one transition per measurement.
D. I/Os are configured as inputs.
E. All parameters and waveforms are not applicable to all devices.

图 7-4. Reset Load Circuits and Voltage Waveforms

Copyright © 2023 Texas Instruments Incorporated

8 Detailed Description

8.1 Overview

8.1.1 Voltage Translation

表 8-1 shows how to set up V_{CC} levels for the necessary voltage translation between the I^2C bus and the TCA6424A.

表 8-1. Voltage Translation

V_{CCI} (SDA AND SCL OF I^2C CONTROLLER) (V)	V_{CCP} (P PORT) (V)
1.8	1.8
1.8	2.5
1.8	3.3
1.8	5
2.5	1.8
2.5	2.5
2.5	3.3
2.5	5
3.3	1.8
3.3	2.5
3.3	3.3
3.3	5
5	1.8
5	2.5
5	3.3
5	5

8.2 Functional Block Diagram

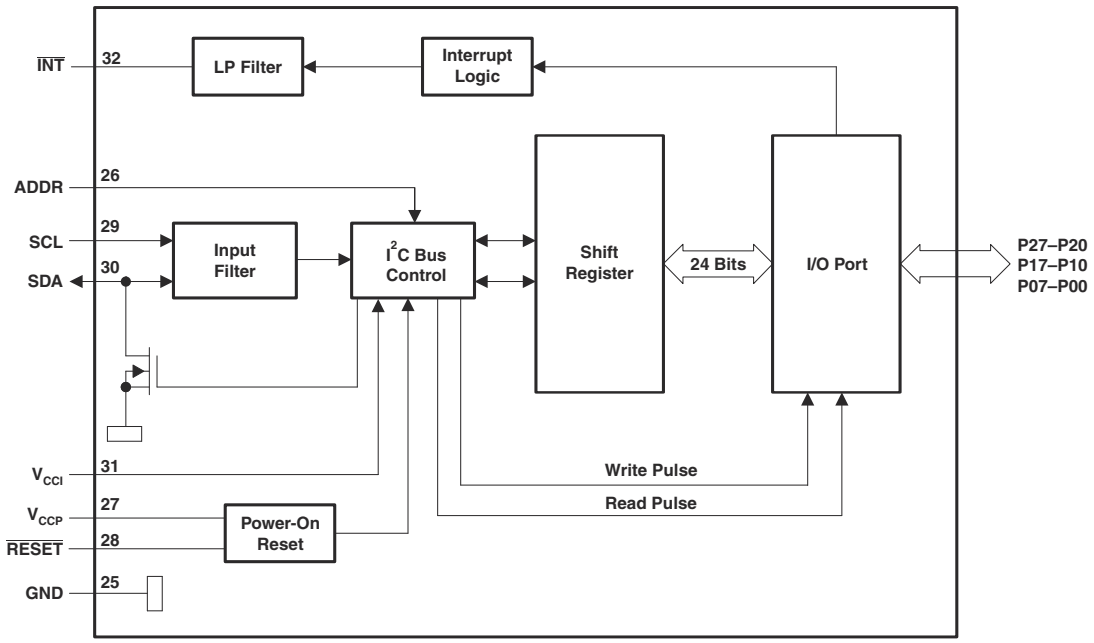

A. All I/Os are set to inputs at reset.

B. Pin numbers shown are for the RGJ package.

图 8-1. Positive Logic

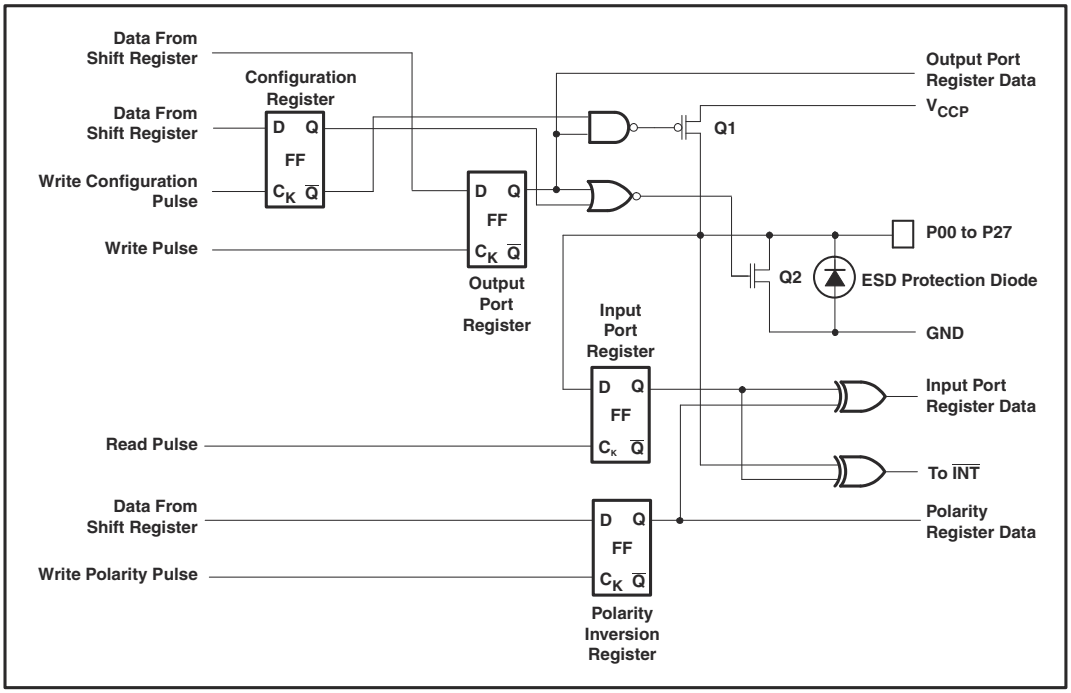

A. On power up or reset, all registers return to default values.

图 8-2. Simplified Schematic of P00 to P27

8.3 Feature Description

8.3.1 I/O Port

When an I/O is configured as an input, FETs Q1 and Q2 are off, which creates a high-impedance input. The input voltage may be raised above V_{CC} to a maximum of 5.5 V.

If the I/O is configured as an output, Q1 or Q2 is enabled, depending on the state of the output port register. In this case, there are low-impedance paths between the I/O pin and either V_{CC} or GND. The external voltage applied to this I/O pin should not exceed the recommended levels for proper operation.

8.3.2 I²C Interface

The bidirectional I²C bus consists of the serial clock (SCL) and serial data (SDA) lines. Both lines must be connected to a positive supply through a pullup resistor when connected to the output stages of a device. Data transfer may be initiated only when the bus is not busy.

I²C communication with this device is initiated by a controller sending a Start condition, a high-to-low transition on the SDA input/output, while the SCL input is high (see 图 8-3). After the Start condition, the device address byte is sent, most significant bit (MSB) first, including the data direction bit (R/ $\overline{W}$).

After receiving the valid address byte, this device responds with an acknowledge (ACK), a low on the SDA input/output during the high of the ACK-related clock pulse. The address (ADDR) input of the target device must not be changed between the Start and the Stop conditions.

On the I²C bus, only one data bit is transferred during each clock pulse. The data on the SDA line must remain stable during the high pulse of the clock period, as changes in the data line at this time are interpreted as control commands (Start or Stop) (see 图 8-4).

A Stop condition, a low-to-high transition on the SDA input/output while the SCL input is high, is sent by the controller (see 图 8-3).

Copyright © 2023 Texas Instruments Incorporated

Any number of data bytes can be transferred from the transmitter to receiver between the Start and the Stop conditions. Each byte of eight bits is followed by one ACK bit. The transmitter must release the SDA line before the receiver can send an ACK bit. The device that acknowledges must pull down the SDA line during the ACK clock pulse, so that the SDA line is stable low during the high pulse of the ACK-related clock period (see 图 8-5). When a target receiver is addressed, it must generate an ACK after each byte is received. Similarly, the controller must generate an ACK after each byte that it receives from the target transmitter. Setup and hold times must be met to ensure proper operation.

A controller receiver signals an end of data to the target transmitter by not generating an acknowledge (NACK) after the last byte has been clocked out of the target. This is done by the controller receiver by holding the SDA line high. In this event, the transmitter must release the data line to enable the controller to generate a Stop condition.

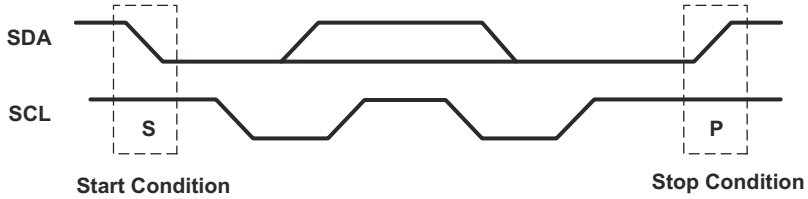

图 8-3. Definition of Start and Stop Conditions

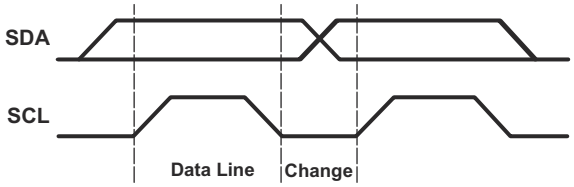

图 8-4. Bit Transfer

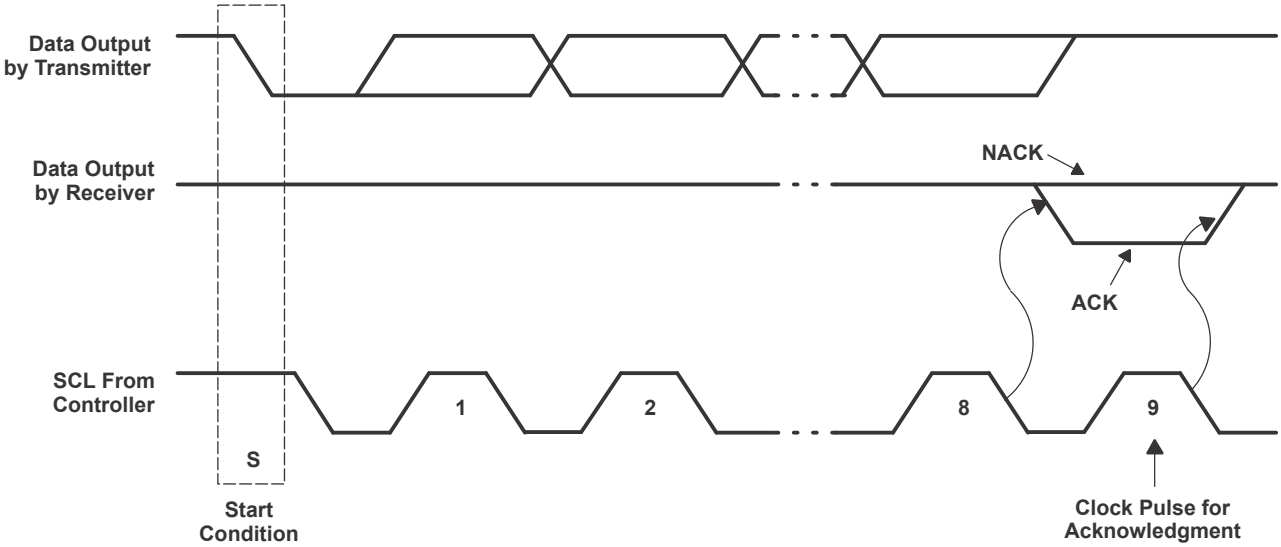

图 8-5. Acknowledgment on the I²C Bus

表 8-2. Interface Definition

BYTE	BIT							
	7 (MSB)	6	5	4	3	2	1	0 (LSB)
I²C target address	L	H	L	L	L	H	ADDR	R/ $\overline{W}$

表 8-2. Interface Definition (continued)

I/O data bus	P07	P06	P05	P04	P03	P02	P01	P00
	P17	P16	P15	P14	P13	P12	P11	P10
	P27	P26	P25	P24	P23	P22	P21	P20

8.4 Device Functional Modes

8.4.1 Device Address

The address of the TCA6424A is shown in 图 8-6.

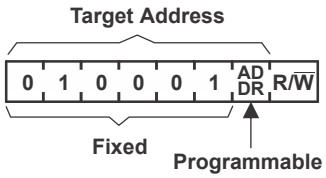

图 8-6. TCA6424A Address

表 8-3. Address Reference

ADDR	I²C BUS TARGET ADDRESS
L	34 (decimal), 22 (hexadecimal)
H	35 (decimal), 23 (hexadecimal)

The last bit of the target address defines the operation (read or write) to be performed. A high (1) selects a read operation, while a low (0) selects a write operation.

8.5 Programming

8.5.1 Power-On Reset

When power (from 0 V) is applied to V_{CCP}, an internal power-on reset holds the TCA6424A in a reset condition until V_{CCP} has reached V_{POR}. At that time, the reset condition is released, and the TCA6424A registers and I^2C/SMBus state machine initializes to their default states. After that, V_{CCP} must be lowered to below 0.2 V and back up to the operating voltage for a power-reset cycle.

8.5.2 Reset Input ($\overline{RESET}$)

The $\overline{RESET}$ input can be asserted to initialize the system while keeping the V_{CCP} at its operating level. A reset can be accomplished by holding the $\overline{RESET}$ pin low for a minimum of t_W. The TCA6424A registers and I^2C/SMBus state machine are changed to their default state once $\overline{RESET}$ is low (0). When $\overline{RESET}$ is high (1), the I/O levels at the P port can be changed externally or through the controller. This input requires a pullup resistor to V_{CCI}, if no active connection is used.

8.5.3 Interrupt Output ($\overline{INT}$)

An interrupt is generated by any rising or falling edge of the port inputs in the input mode. After time t_{iv}, the signal $\overline{INT}$ is valid. Resetting the interrupt circuit is achieved when data on the port is changed to the original setting or when data is read from the port that generated the interrupt. Resetting occurs in the read mode at the acknowledge (ACK) or not acknowledge (NACK) bit after the rising edge of the SCL signal. Interrupts that occur during the ACK or NACK clock pulse can be lost (or be very short) due to the resetting of the interrupt during this pulse. Each change of the I/Os after resetting is detected and is transmitted as $\overline{INT}$.

Reading from or writing to another device does not affect the interrupt circuit, and a pin configured as an output cannot cause an interrupt. Changing an I/O from an output to an input may cause a false interrupt to occur, if the state of the pin does not match the contents of the Input Port register.

Copyright © 2023 Texas Instruments Incorporated

The $\overline{INT}$ output has an open-drain structure and requires pullup resistor to V_{CCP} or V_{CCI} depending on the application. If the $\overline{INT}$ signal is connected back to the processor that provides the SCL signal to the TCA6424A then the $\overline{INT}$ pin has to be connected to V_{CCI}. If not, the $\overline{INT}$ pin can be connected to V_{CCP}.

8.5.4 Bus Transactions

Data is exchanged between the controller and TCA6424A through write and read commands.

8.5.4.1 Writes

Data is transmitted to the TCA6424A by sending the device address and setting the least-significant bit (LSB) to a logic 0 (see 图 8-6 for device address). The command byte is sent after the address and determines which register receives the data that follows the command byte. There is no limitation on the number of data bytes sent in one write transmission.

The twelve registers within the TCA6424A are grouped into four different sets. The four sets of registers are input ports, output ports, polarity inversion ports and configuration ports. After sending data to one register, the next data byte is sent to the next register in the group of 3 registers (see 图 8-7 and 图 8-8). For example, if the first byte is send to Output Port 2 (register 6), the next byte is stored in Output Port 0 (register 4).

There is no limitation on the number of data bytes sent in one write transmission. In this way, each 8-bit register may be updated independently of the other registers.

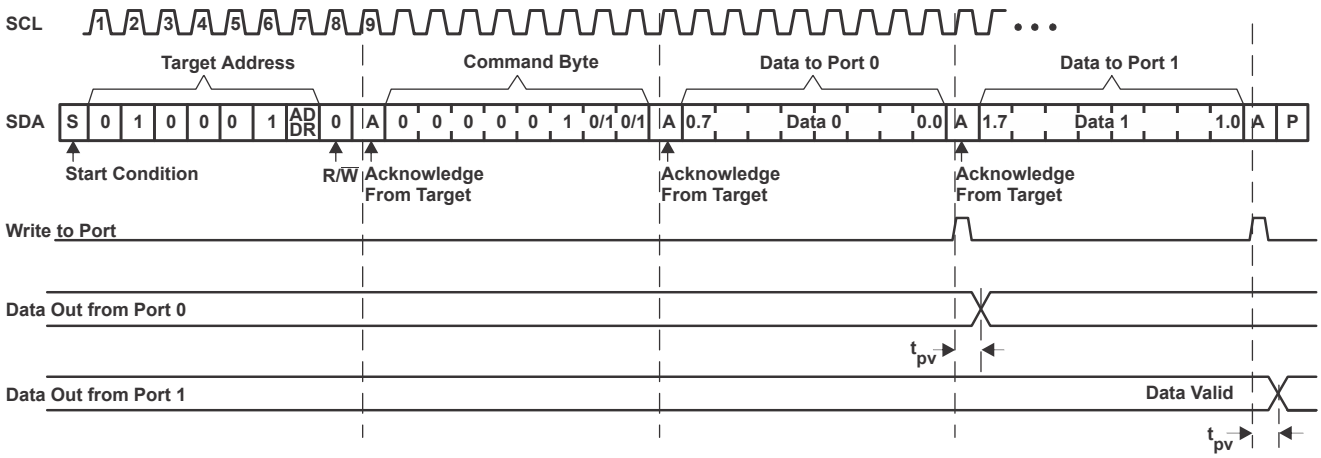

图 8-7. Write to Output Port Register

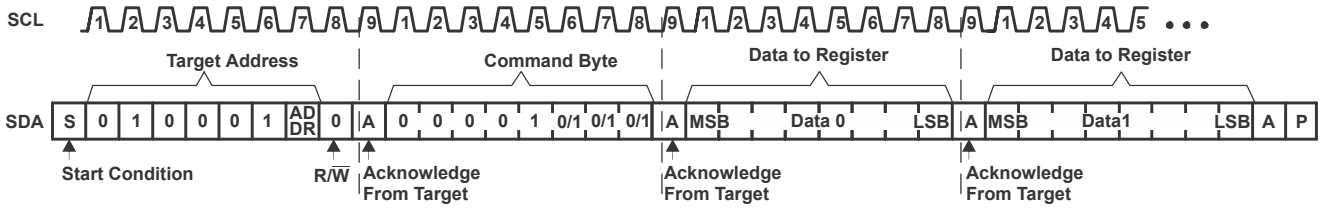

图 8-8. Write to Configuration or Polarity Inversion Registers

8.5.4.2 Reads

The bus controller first must send the TCA6424A address with the LSB set to a logic 0 (see 图 8-6 for device address). The command byte is sent after the address and determines which register is accessed.

After a restart, the device address is sent again but, this time, the LSB is set to a logic 1. Data from the register defined by the command byte then is sent by the TCA6424A (see 图 8-9 and 图 8-10).

After a restart, the value of the register defined by the command byte matches the register being accessed when the restart occurred. For example, if the command byte references Input Port 1 before the restart, and the restart occurs when Input Port 0 is being read, the stored command byte changes to reference Input Port 0. The original command byte is forgotten. If a subsequent restart occurs, Input Port 0 is read first. Data is clocked into the register on the rising edge of the ACK clock pulse. After the first byte is read, additional bytes may be read, but the data now reflects the information in the other register in the pair. For example, if Input Port 1 is read, the next byte read is Input Port 0.

Data is clocked into the register on the rising edge of the ACK clock pulse. There is no limitation on the number of data bytes received in one read transmission, but when the final byte is received, the bus controller must not acknowledge the data.

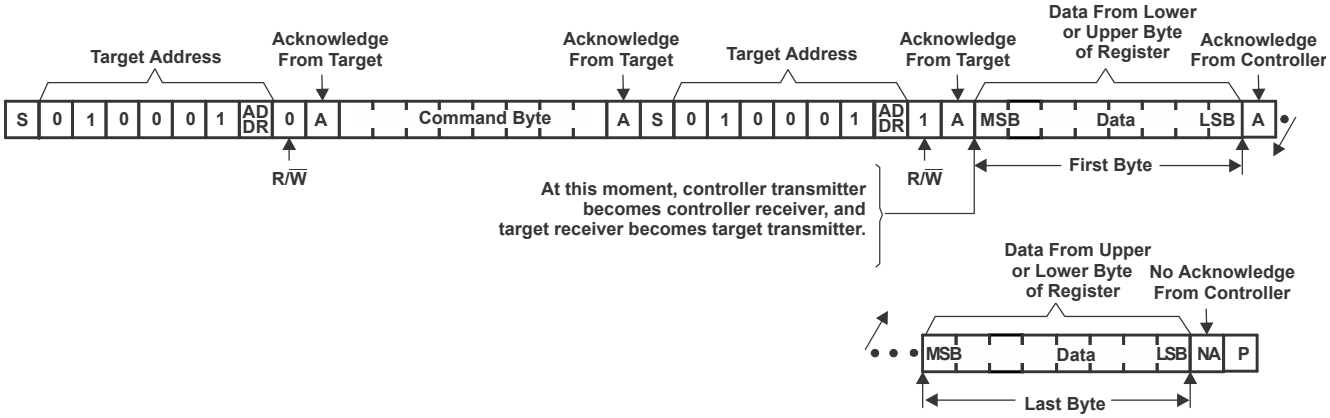

图 8-9. Read From Register

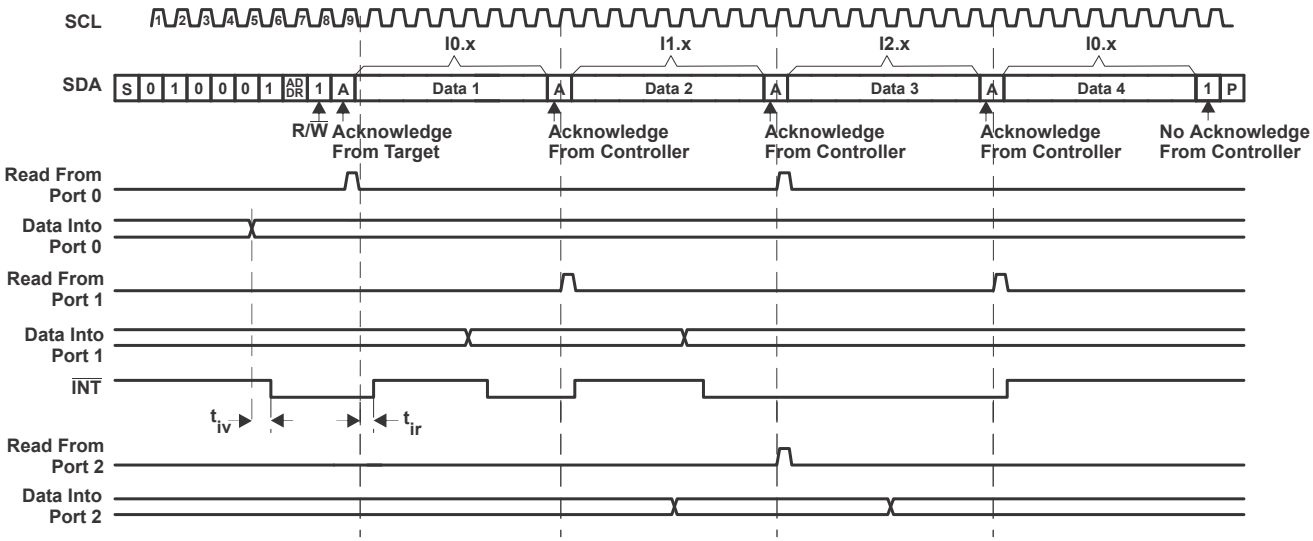

A. Transfer of data can be stopped at any time by a Stop condition. When this occurs, data present at the latest acknowledge phase is valid (output mode). It is assumed that the command byte previously has been set to 00 (read Input Port register).

B. This figure eliminates the command byte transfer, a restart, and target address call between the initial target address call and actual data transfer from P port (see 图 8-9).

C. Auto-increment mode is enabled.

图 8-10. Read Input Port Register

Copyright © 2023 Texas Instruments Incorporated

8.6 Register Maps

8.6.1 Control Register and Command Byte

Following the successful acknowledgment of the address byte, the bus controller sends a command byte, which is stored in the control register in the TCA6424A. Four bits of this data byte state the operation (read or write) and the internal registers (input, output, polarity inversion, or configuration) that will be affected. The control register can be written or read through the I^2C bus. The command byte is sent only during a write transmission.

The control register includes an Auto-Increment (AI) bit which is the most significant bit (bit 7) of the command byte. At power-up, the control register defaults to 00 (hex), with the AI bit set to logic 1, and the lowest 7 bits set to logic 0.

If AI is 1, the 2 least significant bits are automatically incremented after a read or write. This allows the user to program and/or read the 3 register banks sequentially. If more than 3 bytes of data are written when AI is 1, previous data in the selected registers will be overwritten. Reserved registers are skipped and not accessed (refer to Table 5).

If AI is 0, the 2 least significant bits are not incremented after data is read or written. During a read operation, the same register bank is read each time. During a write operation, data is written to the same register bank each time.

Reserved command codes and command byte outside the range stated in the Command Byte table must not be accessed for proper device functionality.

AI	B6	B5	B4	B3	B2	B1	B0

图 8-11. Control Register Bits

表 8-4. Command Byte

CONTROL REGISTER BITS								AUTO-INCREMENT STATE	COMMAND BYTE (HEX)	REGISTER	PROTOCOL	POWER-UP DEFAULT
AI	B6	B5	B4	B3	B2	B1	B0					
0	0	0	0	0	0	0	0	Disable	00	Input Port 0	Read byte	xxxx xxxx(1)
1	0	0	0	0	0	0	0	Enable	80			
0	0	0	0	0	0	0	1	Disable	01	Input Port 1	Read byte	xxxx xxxx(1)
1	0	0	0	0	0	0	1	Enable	81			
0	0	0	0	0	0	1	0	Disable	02	Input Port 2	Read byte	xxxx xxxx(1)
1	0	0	0	0	0	1	0	Enable	82			
0	0	0	0	0	0	1	1	Disable	03	Reserved	Reserved	Reserved
1	0	0	0	0	0	1	1	Enable	83			
0	0	0	0	0	1	0	0	Disable	04	Output Port 0	Read/write byte	1111 1111
1	0	0	0	0	1	0	0	Enable	84			
0	0	0	0	0	1	0	1	Disable	05	Output Port 1	Read/write byte	1111 1111
1	0	0	0	0	1	0	1	Enable	85			
0	0	0	0	0	1	1	0	Disable	06	Output Port 2	Read/write byte	1111 1111
1	0	0	0	0	1	1	0	Enable	86			
0	0	0	0	0	1	1	1	Disable	07	Reserved	Reserved	Reserved
1	0	0	0	0	1	1	1	Enable	87			
0	0	0	0	1	0	0	0	Disable	08	Polarity Inversion Port 0	Read/write byte	0000 0000
1	0	0	0	1	0	0	0	Enable	88			
0	0	0	0	1	0	0	1	Disable	09	Polarity Inversion Port 1	Read/write byte	0000 0000
1	0	0	0	1	0	0	1	Enable	89			
0	0	0	0	1	0	1	0	Disable	0A	Polarity Inversion Port 2	Read/write byte	0000 0000
1	0	0	0	1	0	1	0	Enable	8A			
0	0	0	0	1	0	1	1	Disable	0B	Reserved	Reserved	Reserved
1	0	0	0	1	0	1	1	Enable	8B			
0	0	0	0	1	1	0	0	Disable	0C	Configuration Port 0	Read/write byte	1111 1111
1	0	0	0	1	1	0	0	Enable	8C			
0	0	0	0	1	1	0	1	Disable	0D	Configuration Port 1	Read/write byte	1111 1111
1	0	0	0	1	1	0	1	Enable	8D			
0	0	0	0	1	1	1	0	Disable	0E	Configuration Port 2	Read/write byte	1111 1111
1	0	0	0	1	1	1	0	Enable	8E			
0	0	0	0	1	1	1	1	Disable	0F	Reserved	Reserved	Reserved
1	0	0	0	1	1	1	1	Enable	8F			

(1) Undefined

Copyright © 2023 Texas Instruments Incorporated

8.6.2 Register Descriptions

The Input Port registers (registers 0, 1 and 2) reflect the incoming logic levels of the pins, regardless of whether the pin is defined as an input or an output by the Configuration register. They act only on read operation. Writes to these registers have no effect. The default value (X) is determined by the externally applied logic level. Before a read operation, a write transmission is sent with the command byte to indicate to the I^2C device that the Input Port register will be accessed next.

表 8-5. Registers 0, 1 and 2 (Input Port Registers)

BIT	I-07	I-06	I-05	I-04	I-03	I-02	I-01	I-00
DEFAULT	X	X	X	X	X	X	X	X
BIT	I-17	I-16	I-15	I-14	I-13	I-12	I-11	I-10
DEFAULT	X	X	X	X	X	X	X	X
BIT	I-27	I-26	I-25	I-24	I-23	I-22	I-21	I-20
DEFAULT	X	X	X	X	X	X	X	X

The Output Port registers (registers 4, 5 and 6) shows the outgoing logic levels of the pins defined as outputs by the Configuration register. Bit values in these registers have no effect on pins defined as inputs. In turn, reads from these registers reflect the value that is in the flip-flop controlling the output selection, NOT the actual pin value.

表 8-6. Registers 4, 5 and 6 (Output Port Registers)

BIT	O-07	O-06	O-05	O-04	O-03	O-02	O-01	O-00
DEFAULT	1	1	1	1	1	1	1	1
BIT	O-17	O-16	O-15	O-14	O-13	O-12	O-11	O-10
DEFAULT	1	1	1	1	1	1	1	1
BIT	O-27	O-26	O-25	O-24	O-23	O-22	O-21	O-20
DEFAULT	1	1	1	1	1	1	1	1

The Polarity Inversion registers (registers 8, 9 and 10) allow polarity inversion of pins defined as inputs by the Configuration register. If a bit in these registers is set (written with 1), the corresponding port pin's polarity is inverted. If a bit in these registers is cleared (written with a 0), the corresponding port pin's original polarity is retained.

表 8-7. Registers 8, 9 and 10 (Polarity Inversion Registers)

BIT	P-07	P-06	P-05	P-04	P-03	P-02	P-01	P-00
DEFAULT	0	0	0	0	0	0	0	0
BIT	P-17	P-16	P-15	P-14	P-13	P-12	P-11	P-10
DEFAULT	0	0	0	0	0	0	0	0
BIT	P-27	P-26	P-25	P-24	P-23	P-22	P-21	P-20
DEFAULT	0	0	0	0	0	0	0	0

The Configuration registers (registers 12, 13 and 14) configure the direction of the I/O pins. If a bit in these registers is set to 1, the corresponding port pin is enabled as an input with a high-impedance output driver. If a bit in these registers is cleared to 0, the corresponding port pin is enabled as an output.

表 8-8. Registers 12, 13 and 14 (Configuration Registers)

BIT	C-07	C-06	C-05	C-04	C-03	C-02	C-01	C-00
DEFAULT	1	1	1	1	1	1	1	1
BIT	C-17	C-16	C-15	C-14	C-13	C-12	C-11	C-10
DEFAULT	1	1	1	1	1	1	1	1
BIT	C-27	C-26	C-25	C-24	C-23	C-22	C-21	C-20

Copyright © 2023 Texas Instruments Incorporated

表 8-8. Registers 12, 13 and 14 (Configuration Registers) (continued)

DEFAULT	1	1	1	1	1	1	1	1

Copyright © 2023 Texas Instruments Incorporated

9 Application and Implementation

备注

Information in the following applications sections is not part of the TI component specification, and TI does not warrant its accuracy or completeness. TI’s customers are responsible for determining suitability of components for their purposes. Customers should validate and test their design implementation to confirm system functionality.

9.1 Typical Application

图 9-1 shows an application in which the TCA6424A can be used.

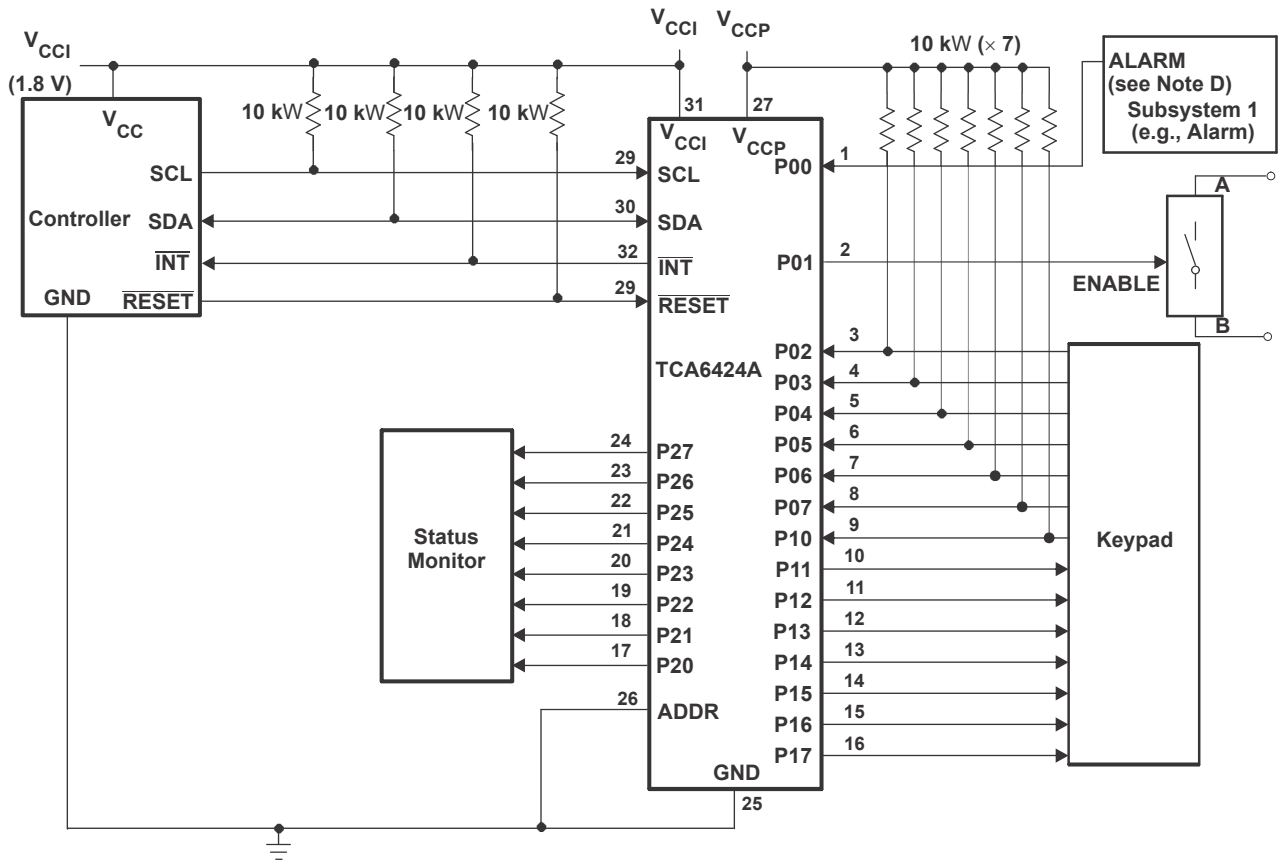

A. Device address configured as 0100000 for this example.
B. P00 and P02 – P10 are configured as inputs.
C. P01, P11 – P17, and P20 – P27 are configured as outputs.
D. Resistors are required for inputs (on P port) that may float. If a driver to an input will not let the input float, a resistor is not needed. Outputs (in the P port) do not need pullup resistors.

图 9-1. Typical Application

9.1.1 Detailed Design Procedure

9.1.1.1 Minimizing I_{CC} When I/Os Control LEDs

When the I/Os are used to control LEDs, normally they are connected to V_{CC} through a resistor as shown in 图 9-1. The LED acts as a diode so, when the LED is off, the I/O V_{IN} is about 1.2 V less than V_{CC}. The ΔI_{CC} parameter in Electrical Characteristics shows how I_{CC} increases as V_{IN} becomes lower than V_{CC}. Designs that

must minimize current consumption, such as battery power applications, should consider maintaining the I/O pins greater than or equal to V_{CC} when the LED is off.

图 9-2 shows a high-value resistor in parallel with the LED. 图 9-3 shows V_{CC} less than the LED supply voltage by at least 1.2 V. Both of these methods maintain the I/O V_{IN} at or above V_{CC} and prevent additional supply current consumption when the LED is off.

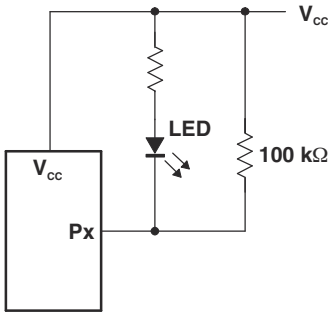

图 9-2. High-Value Resistor in Parallel With the LED

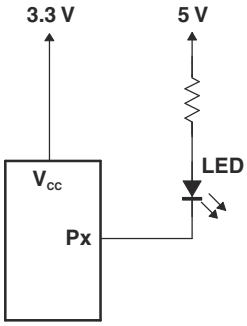

图 9-3. Device Supplied by a Low Voltage

9.2 Power Supply Recommendation

In the event of a glitch or data corruption, TCA6424A can be reset to its default conditions by using the power-on reset feature. Power-on reset requires that the device go through a power cycle to be completely reset. This reset also happens when the device is powered on for the first time in an application.

Ramping up the device V_{CCP} before V_{CCI} is recommended to prevent SDA from potentially being stuck LOW.

The two types of power-on reset are shown in 图 9-4 and 图 9-5.

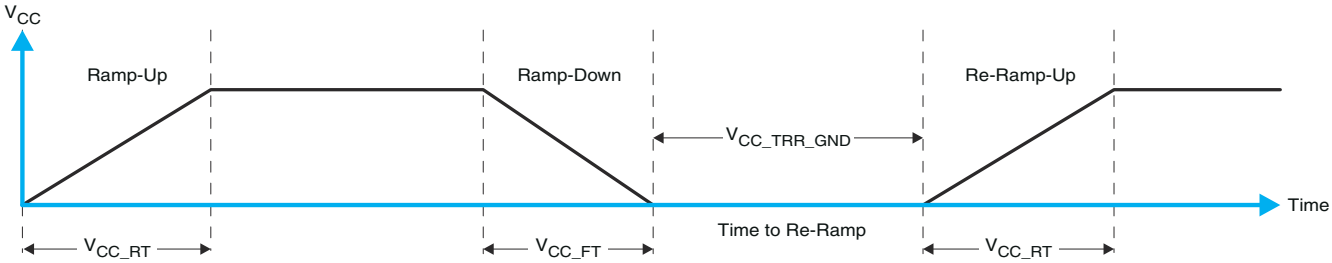

图 9-4. V_{CC} is Lowered Below 0.2 V or 0 V and Then Ramped Up to V_{CC}

Copyright © 2023 Texas Instruments Incorporated

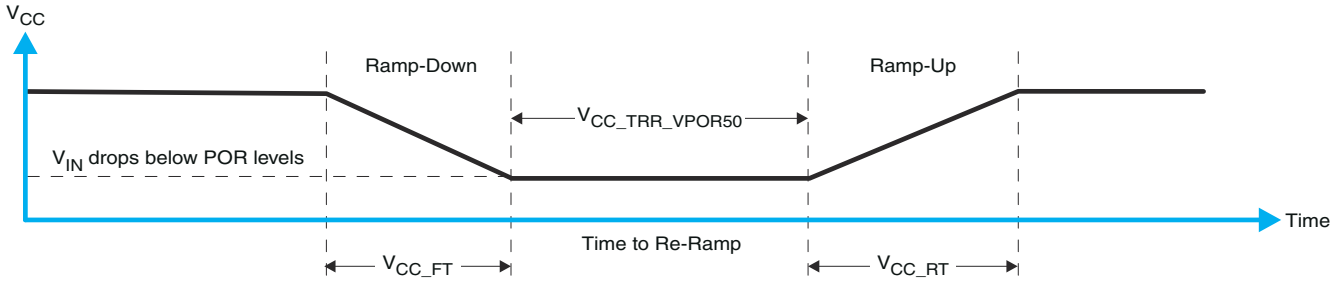

图 9-5. V_{CC} is Lowered Below the POR Threshold, Then Ramped Back Up to V_{CC}

表 9-1 specifies the performance of the power-on reset feature for TCA6424A for both types of power-on reset.

表 9-1. Recommended Supply Sequencing and Rates(1)

PARAMETER			MIN	TYP	MAX	UNIT
t_{VCC_FT}	Fall rate	See 图 9-4	1		100	ms
t_{VCC_RT}	Rise rate	See 图 9-4	0.01		100	ms
$t_{VCC_TRR_GND}$	Time to re-ramp (when V_{CC} drops to GND)	See 图 9-4	40			µs
$t_{VCC_TRR_POR50}$	Time to re-ramp (when V_{CC} drops to V_{POR_MIN} – 50 mV)	See 图 9-5	40			µs
V_{CC_GH}	Level that V_{CCP} can glitch down to, but not cause a functional disruption when V_{CCX_GW} = 1 µs	See 图 9-6			1.2	V
t_{VCC_GW}	Glitch width that will not cause a functional disruption when V_{CCX_GH} = 0.5 × V_{CCx}	See 图 9-6			10	µs
V_{PORF}	Voltage trip point of POR on falling V_{CC}		0.767		1.144	V
V_{PORR}	Voltage trip point of POR on rising V_{CC}		1.033		1.428	V

(1) T_A = –40°C to 85°C (unless otherwise noted)

Glitches in the power supply can also affect the power-on reset performance of this device. The glitch width (V_{CC_GW}) and height (V_{CC_GH}) are dependent on each other. The bypass capacitance, source impedance, and device impedance are factors that affect power-on reset performance. 图 9-6 and 表 9-1 provide more information on how to measure these specifications.

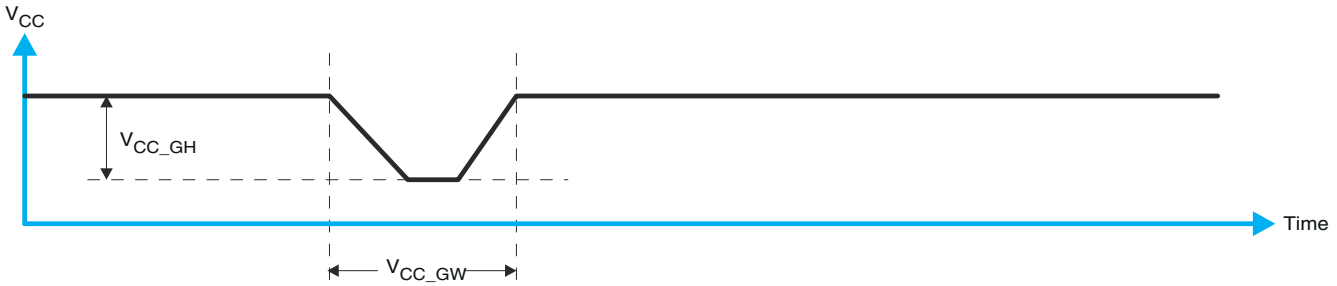

图 9-6. Glitch Width and Glitch Height

V_{POR} is critical to the power-on reset. V_{POR} is the voltage level at which the reset condition is released and all the registers and the I^2C/SMBus state machine are initialized to the default states. The value of V_{POR} differs based on the V_{CC} being lowered to or from 0. 图 9-7 and 表 9-1 provide more details on this specification.

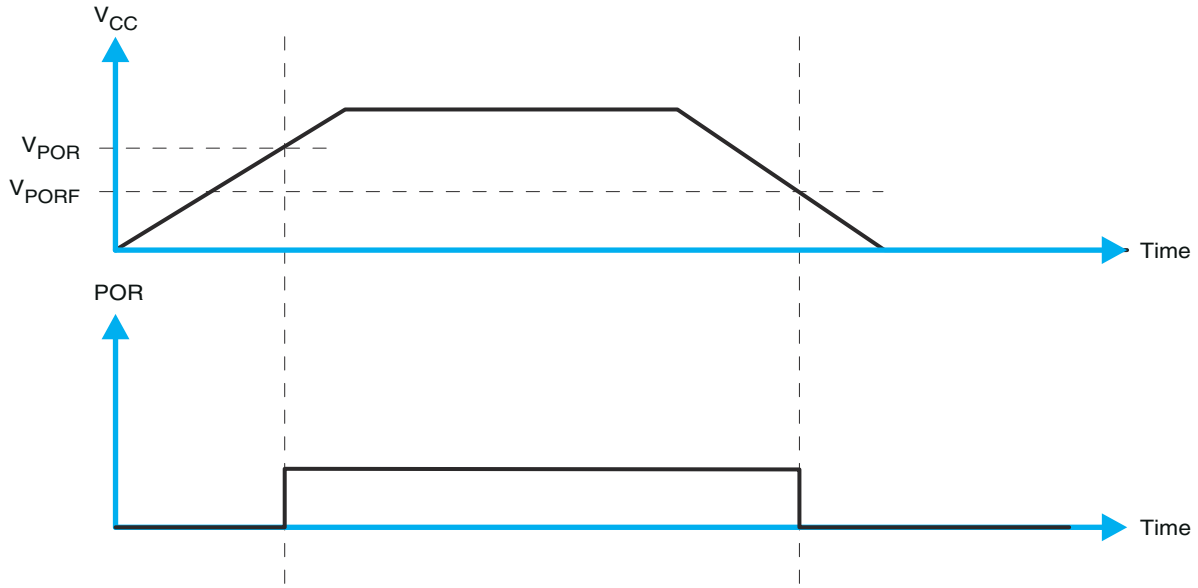

图 9-7. V_{POR}

Copyright © 2023 Texas Instruments Incorporated

10 Device and Documentation Support

10.1 Receiving Notification of Documentation Updates

To receive notification of documentation updates, navigate to the device product folder on ti.com. In the upper right corner, click on *Alert me* to register and receive a weekly digest of any product information that has changed. For change details, review the revision history included in any revised document.

10.2 支持资源

TI E2E™ 支持论坛是工程师的重要参考资料，可直接从专家获得快速、经过验证的解答和设计帮助。搜索现有解答或提出自己的问题可获得所需的快速设计帮助。

链接的内容由各个贡献者“按原样”提供。这些内容并不构成 TI 技术规范，并且不一定反映 TI 的观点；请参阅 TI 的《使用条款》。

10.3 商标

TI E2E™ is a trademark of Texas Instruments.
所有商标均为其各自所有者的财产。

10.4 静电放电警告

静电放电 (ESD) 会损坏这个集成电路。德州仪器 (TI) 建议通过适当的预防措施处理所有集成电路。如果不遵守正确的处理和安装程序，可能会损坏集成电路。

ESD 的损坏小至导致微小的性能降级，大至整个器件故障。精密的集成电路可能更容易受到损坏，这是因为非常细微的参数更改都可能会导致器件与其发布的规格不相符。

10.5 术语表

TI 术语表	本术语表列出并解释了术语、首字母缩略词和定义。

Mechanical, Packaging, and Orderable Information

The following pages include mechanical, packaging, and orderable information. This information is the most current data available for the designated devices. This data is subject to change without notice and revision of this document. For browser-based versions of this data sheet, refer to the left-hand navigation.

PACKAGING INFORMATION

Orderable part number	Status (1)	Material type (2)	Package | Pins	Package qty | Carrier	RoHS (3)	Lead finish/ Ball material (4)	MSL rating/ Peak reflow (5)	Op temp (°C)	Part marking (6)
TCA6424ARGJR	Active	Production	UQFN (RGJ) | 32	3000 | LARGE T&R	Yes	Call TI | Nipdau	Level-1-260C-UNLIM	-40 to 85	PH424A
TCA6424ARGJR.A	Active	Production	UQFN (RGJ) | 32	3000 | LARGE T&R	Yes	NIPDAU	Level-1-260C-UNLIM	-40 to 85	PH424A
TCA6424ARGJR.B	Active	Production	UQFN (RGJ) | 32	3000 | LARGE T&R	Yes	NIPDAU	Level-1-260C-UNLIM	-40 to 85	PH424A
TCA6424ARGJRG4	Active	Production	UQFN (RGJ) | 32	3000 | LARGE T&R	Yes	NIPDAU	Level-1-260C-UNLIM	-40 to 85	PH424A
TCA6424ARGJRG4.A	Active	Production	UQFN (RGJ) | 32	3000 | LARGE T&R	Yes	NIPDAU	Level-1-260C-UNLIM	-40 to 85	PH424A
TCA6424ARGJRG4.B	Active	Production	UQFN (RGJ) | 32	3000 | LARGE T&R	Yes	NIPDAU	Level-1-260C-UNLIM	-40 to 85	PH424A

(1) **Status:** For more details on status, see our product life cycle.

(2) **Material type:** When designated, preproduction parts are prototypes/experimental devices, and are not yet approved or released for full production. Testing and final process, including without limitation quality assurance, reliability performance testing, and/or process qualification, may not yet be complete, and this item is subject to further changes or possible discontinuation. If available for ordering, purchases will be subject to an additional waiver at checkout, and are intended for early internal evaluation purposes only. These items are sold without warranties of any kind.

(3) **RoHS values:** Yes, No, RoHS Exempt. See the TI RoHS Statement for additional information and value definition.

(4) **Lead finish/Ball material:** Parts may have multiple material finish options. Finish options are separated by a vertical ruled line. Lead finish/Ball material values may wrap to two lines if the finish value exceeds the maximum column width.

(5) **MSL rating/Peak reflow:** The moisture sensitivity level ratings and peak solder (reflow) temperatures. In the event that a part has multiple moisture sensitivity ratings, only the lowest level per JEDEC standards is shown. Refer to the shipping label for the actual reflow temperature that will be used to mount the part to the printed circuit board.

(6) **Part marking:** There may be an additional marking, which relates to the logo, the lot trace code information, or the environmental category of the part.

Multiple part markings will be inside parentheses. Only one part marking contained in parentheses and separated by a "~" will appear on a part. If a line is indented then it is a continuation of the previous line and the two combined represent the entire part marking for that device.

Important Information and Disclaimer: The information provided on this page represents TI's knowledge and belief as of the date that it is provided. TI bases its knowledge and belief on information provided by third parties, and makes no representation or warranty as to the accuracy of such information. Efforts are underway to better integrate information from third parties. TI has taken and continues to take reasonable steps to provide representative and accurate information but may not have conducted destructive testing or chemical analysis on incoming materials and chemicals. TI and TI suppliers consider certain information to be proprietary, and thus CAS numbers and other limited information may not be available for release.

In no event shall TI's liability arising out of such information exceed the total purchase price of the TI part(s) at issue in this document sold by TI to Customer on an annual basis.

TAPE AND REEL INFORMATION

REEL DIMENSIONS

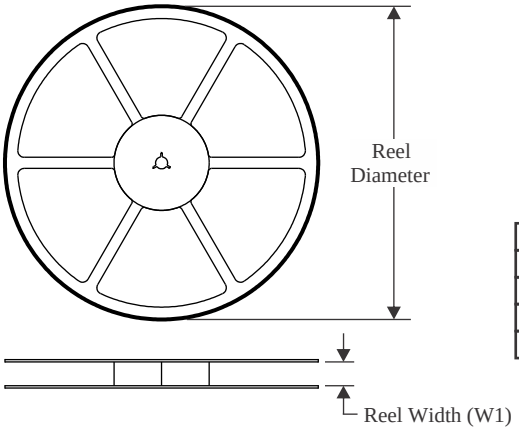

TAPE DIMENSIONS

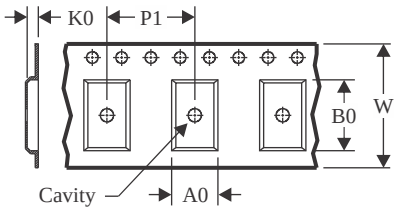

A0	Dimension designed to accommodate the component width
B0	Dimension designed to accommodate the component length
K0	Dimension designed to accommodate the component thickness
W	Overall width of the carrier tape
P1	Pitch between successive cavity centers

QUADRANT ASSIGNMENTS FOR PIN 1 ORIENTATION IN TAPE

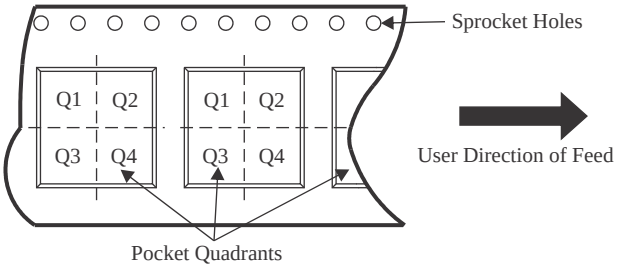

*All dimensions are nominal

Device	Package Type	Package Drawing	Pins	SPQ	Reel Diameter (mm)	Reel Width W1 (mm)	A0 (mm)	B0 (mm)	K0 (mm)	P1 (mm)	W (mm)	Pin1 Quadrant
TCA6424ARGJRG4	UQFN	RGJ	32	3000	330.0	12.4	5.3	5.3	0.75	8.0	12.0	Q2

TAPE AND REEL BOX DIMENSIONS

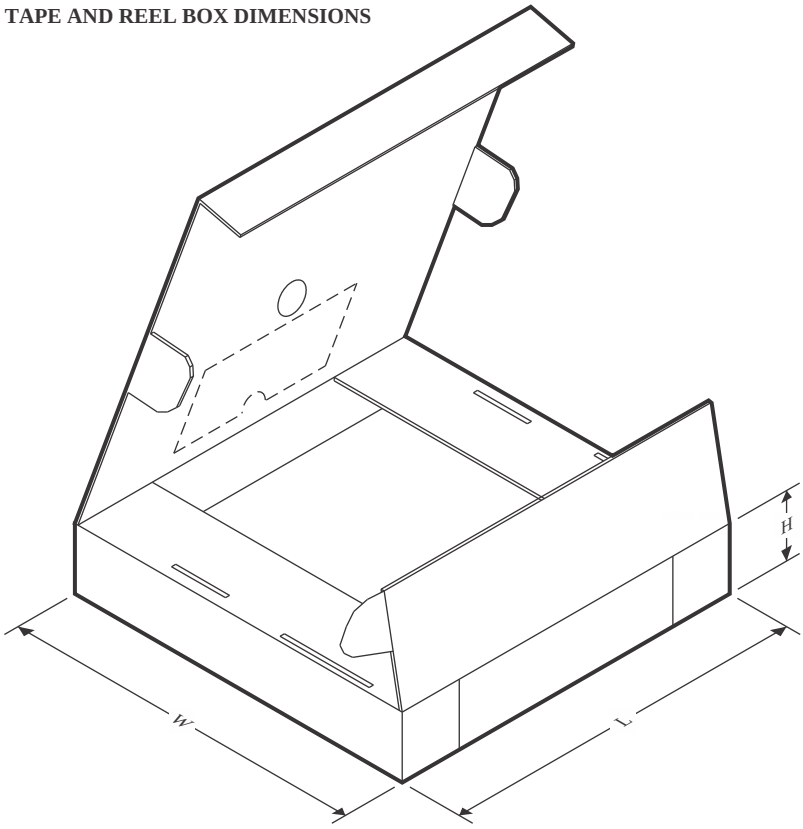

*All dimensions are nominal

Device	Package Type	Package Drawing	Pins	SPQ	Length (mm)	Width (mm)	Height (mm)
TCA6424ARGJRG4	UQFN	RGJ	32	3000	346.0	346.0	35.0

PACKAGE OUTLINE

RGJ0032A

UQFN - 0.6 mm max height

PLASTIC QUAD FLATPACK - NO LEAD

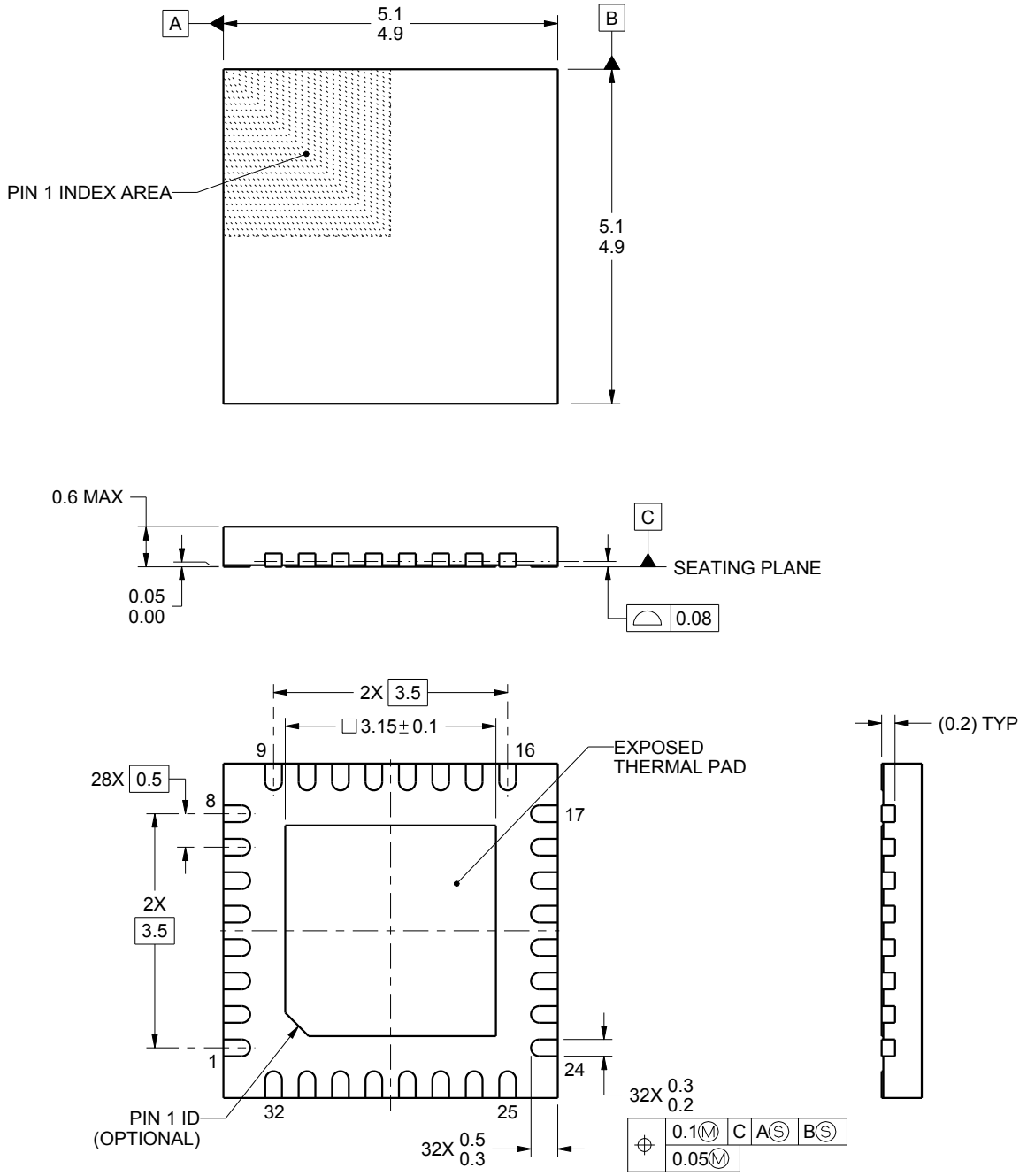

4222103/A 08/2015

NOTES:

1. All linear dimensions are in millimeters. Any dimensions in parenthesis are for reference only. Dimensioning and tolerancing per ASME Y14.5M.
2. This drawing is subject to change without notice.
3. The package thermal pad must be soldered to the printed circuit board for thermal and mechanical performance.

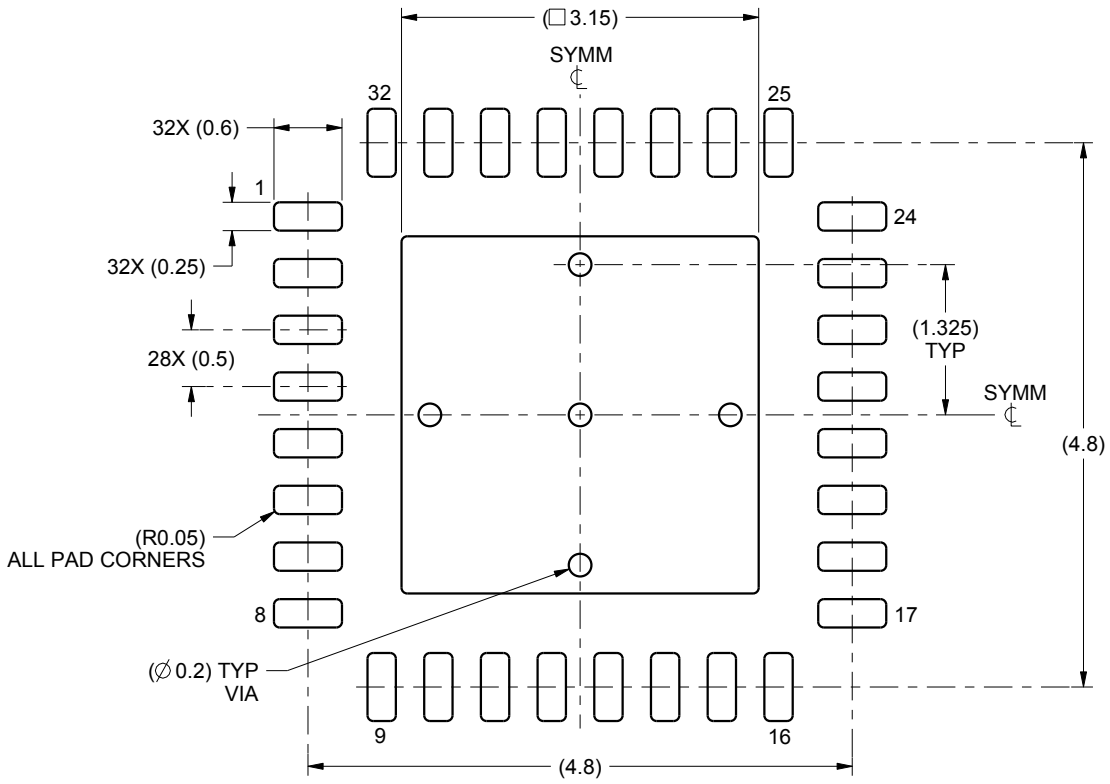

LAND PATTERN EXAMPLE
SCALE:15X

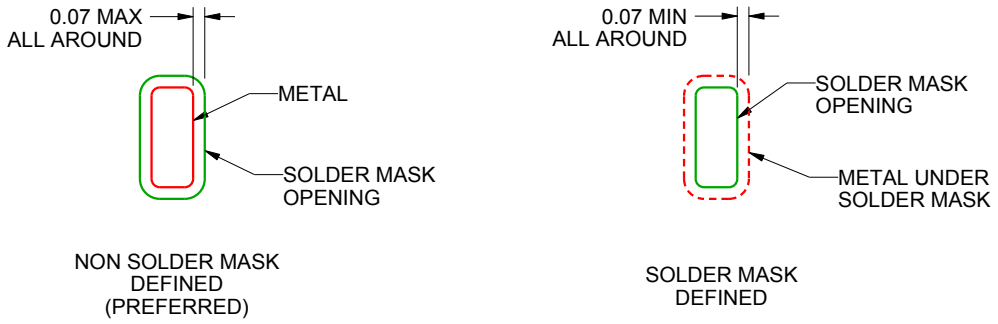

SOLDER MASK DETAILS

4222103/A 08/2015

NOTES: (continued)

4. This package is designed to be soldered to a thermal pad on the board. For more information, see Texas Instruments literature number SLUA271 (www.ti.com/lit/slua271).

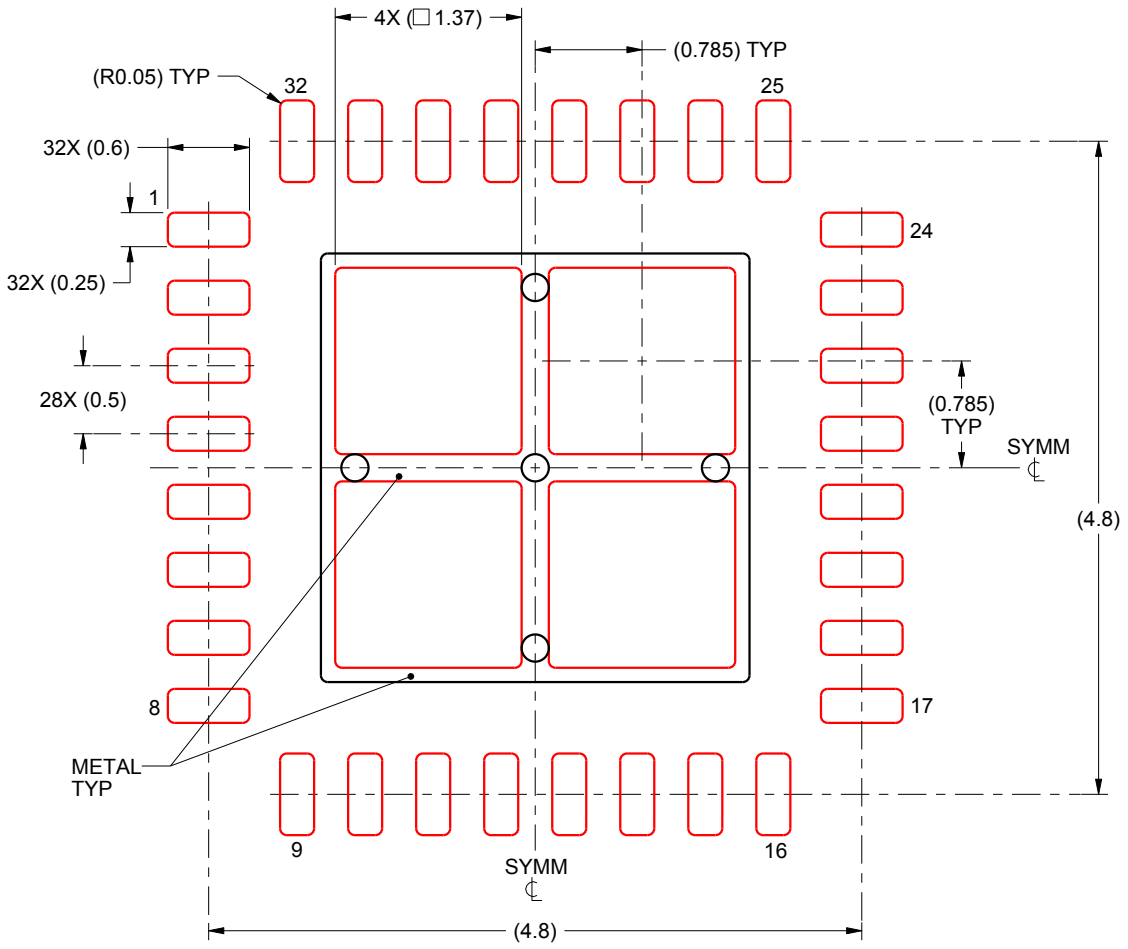

SOLDER PASTE EXAMPLE
BASED ON 0.125 mm THICK STENCIL

EXPOSED PAD
75% PRINTED SOLDER COVERAGE BY AREA
SCALE:18X

4222103/A 08/2015

NOTES: (continued)

5. Laser cutting apertures with trapezoidal walls and rounded corners may offer better paste release. IPC-7525 may have alternate design recommendations.

重要通知和免责声明

TI“按原样”提供技术和可靠性数据（包括数据表）、设计资源（包括参考设计）、应用或其他设计建议、网络工具、安全信息和其他资源，不保证没有瑕疵且不做出任何明示或暗示的担保，包括但不限于对适销性、与某特定用途的适用性或不侵犯任何第三方知识产权的暗示担保。

这些资源可供使用 TI 产品进行设计的熟练开发人员使用。您将自行承担以下全部责任：(1) 针对您的应用选择合适的 TI 产品，(2) 设计、验证并测试您的应用，(3) 确保您的应用满足相应标准以及任何其他安全、安保法规或其他要求。

这些资源如有变更，恕不另行通知。TI 授权您仅可将这些资源用于研发本资源所述的 TI 产品的相关应用。严禁以其他方式对这些资源进行复制或展示。您无权使用任何其他 TI 知识产权或任何第三方知识产权。对于因您对这些资源的使用而对 TI 及其代表造成的任何索赔、损害、成本、损失和债务，您将全额赔偿，TI 对此概不负责。

TI 提供的产品受 TI 销售条款)、TI 通用质量指南 或 ti.com 上其他适用条款或 TI 产品随附的其他适用条款的约束。TI 提供这些资源并不会扩展或以其他方式更改 TI 针对 TI 产品发布的适用的担保或担保免责声明。 除非德州仪器 (TI) 明确将某产品指定为定制产品或客户特定产品，否则其产品均为按确定价格收入目录的标准通用器件。

TI 反对并拒绝您可能提出的任何其他或不同的条款。

版权所有 © 2026，德州仪器 (TI) 公司

最后更新日期：2025 年 10 月