具有 ±15kV IEC ESD 保护的 SNx5C3232E 3V 至 5.5V 双通道 RS-232 1-MBIT/S 线路驱动器和接收器

1 特性

- 由 3V 至 5.5V V_{CC} 电源供电
- 速率高达 1Mbit/s
- 低电源电流。..300 μA（典型值）
- 外部电容器 ...4 × 0.1 μF
- 接受 5V 逻辑输入及 3.3V 电源
- 闩锁性能超过 100mA，符合 JESD 78 II 类规范的要求
- 为 RS-232 引脚提供 ESD 保护
  - ±15kV 人体放电模型 (HBM)
  - ±15kV IEC 61000-4-2 气隙放电
  - ±8kV IEC 61000-4-2 接触放电

2 应用

- 工业 PC
- 有线网络
- 数据中心和企业级计算
- 电池供电型系统
- PDA
- 笔记本电脑
- 掌上电脑
- 手持设备

3 说明

SN65C3232E 和 SN75C3232E 由两个线路驱动器、两个线路接收器和一个双路电荷泵电路组成，具有引脚对引脚（串行端口连接引脚，包括 GND）±15kV ESD 保护。这些器件可在异步通信控制器和串行端口连接器之间提供电气接口。电荷泵和四个小型外部电容器支持由 3V 至 5.5V 单电源供电。这些器件以高达 1Mbit/s 的数据信号传输速率运行，驱动器输出压摆率为 14V/μs 至 150V/μs。

器件信息

器件型号	封装(1)	封装尺寸（标称值）
SN65C3232E SN75C3232E	D (SOIC)	9.90mm x 3.91mm
	DB (SSOP)	6.20mm x 5.30mm
	DW (SOIC)	10.3mm x 7.50mm
	PW (TSSOP)	5.00mm x 4.40mm

(1) 如需了解所有可用封装，请参阅数据表末尾的可订购产品附录。

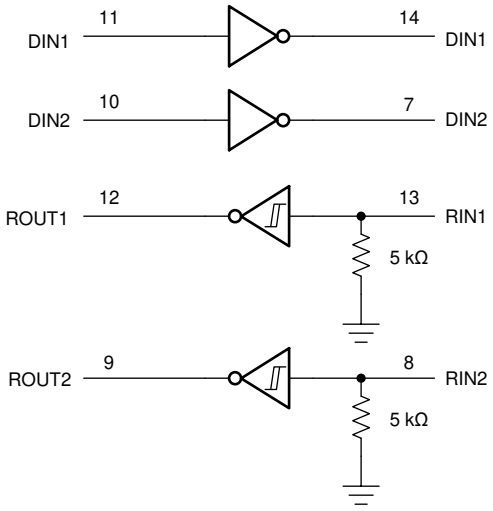

逻辑图（正逻辑）

本文档旨在为方便起见，提供有关 TI 产品中文版本的信息，以确认产品的概要。有关适用的官方英文版本的最新信息，请访问 www.ti.com，其内容始终优先。TI 不保证翻译的准确性和有效性。在实际设计之前，请务必参考最新版本的英文版本。

Table of Contents

1 特性 1
2 应用 1
3 说明 1
4 Revision History 2
5 Pin Configuration and Functions 3
6 Specifications 4
6.1 Absolute Maximum Ratings 4
6.2 ESD Protection 4
6.3 ESD Protection, Driver 4
6.4 ESD Protection, Receiver 4
6.5 Recommended Operating Conditions 5
6.6 Thermal Information, SN65C3232E 5
6.7 Thermal Information, SN75C3232E 5
6.8 Electrical Characteristics, Power 6
6.9 Electrical Characteristics, Driver 6
6.10 Electrical Characteristics, Receiver 6
6.11 Switching Characteristics, Driver 7
6.12 Switching Characteristics, Receiver 7
7 Parameter Measurement Information 8
8 Detailed Description 9
8.1 Overview 9
9 Application and Implenentation 11
9.1 Application Information 11
Typical Application 11
10 Power Supply Recommendations 13
11 Layout 13
11.1 Layout Guidelines 13
11.2 Layout Example 13
12 Device and Documentation Support 14
12.1 接收文档更新通知 14
12.2 支持资源 14
12.3 Trademarks 14
12.4 Electrostatic Discharge Caution 14
12.5 术语表 14
13 Mechanical, Packaging, and Orderable Information 14

4 Revision History

注：以前版本的页码可能与当前版本的页码不同

Changes from Revision A (December 2007) to Revision B (June 2021) **Page**

- 添加了*器件信息* 表、*引脚配置和功能* 部分、*热性能信息* 表、*特性说明* 部分、*器件功能模式*、*应用和实施* 部分、*电源相关建议* 部分、*布局* 部分、*器件和文档支持* 部分和*机械、封装和可订购信息* 部分 1
- 更新了*应用* 部分的列表 1
- Added a note specifying a minimum capacitor of 1 µF between V_{CC} and GND to satisfy IEC ESD specifications in the *ESD Protection, Driver* table 4
- Added a note specifying the need for a 1-µF capacitor between V_{CC} and GND to satisfy IEC ESD specifications in the *ESD Protection, Receiver* table 4

Copyright © 2022 Texas Instruments Incorporated

5 Pin Configuration and Functions

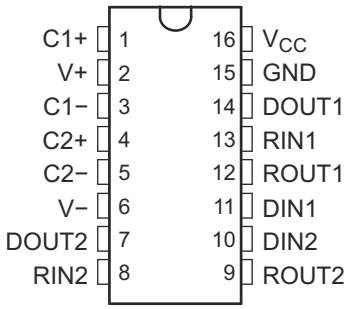

图 5-1. D, DB, DW, or PW Package (Top View)

表 5-1. Pin Functions

PIN		I/O[(1)]	DESCRIPTION
NAME	D, DB, DW or PW		
C1+	1	-	Positive lead of C1 capacitor
V+	2	O	Positive charge pump output for storage capacitor only
C1-	3	-	Negative lead of C1 capacitor
C2+	4	-	Positive lead of C2 capacitor
C2-	5	-	Negative lead of C2 capacitor
V-	6	O	Negative charge pump output for storage capacitor only
DOUT2	7	O	RS232 line data output (to remote RS232 system)
RIN2	8	I	RS232 line data input (from remote RS232 system)
ROUT2	9	O	Logic data output (to UART)
DIN2	10	I	Logic data input (from UART)
DIN1	11	I	Logic data input (from UART)
ROUT1	12	O	Logic data output (to UART)
RIN1	13	I	RS232 line data input (from remote RS232 system)
DOUT1	14	O	RS232 line data output (to remote RS232 system)
GRD	15	-	Ground
V_{CC}	16	-	Supply Voltage, Connect to external 3-V to 5.5-V power supply
Thermal Pad	-	-	Exposed thermal pad. Can be connected to GND or left floating.

(1) Signal Types: I = Input, O = Output, I/O = Input or Output.

Copyright © 2022 Texas Instruments Incorporated

6 Specifications

6.1 Absolute Maximum Ratings

over operating free-air temperature range (unless otherwise noted) see [1]

			MIN	MAX	UNIT
V_{CC}	Supply voltage range[2]		– 0.3	6	V
V+	Positive output supply voltage range[2]		– 0.3	7	V
V –	Negative output supply voltage range[2]		0.3	– 7	V
V+ – V –	Supply voltage difference[2]			13	V
V_I	Input voltage range	Drivers	– 0.3	6	V
		Receivers	– 25	25	
V_O	Output voltage range	Drivers	– 13.2	13.2	V
		Receivers	– 0.3	V_{CC} + 0.3	
T_J	Operating virtual junction temperature			150	°C
T_{stg}	Storage temperature range		– 65	150	°C

(1) Operation outside the Absolute Maximum Ratings may cause permanent device damage. Absolute MaximumRatings do not imply functional operation of the device at these or any other conditions beyond those listed underRecommended Operating Conditions. If used outside the Recommended Operating Conditions but within the Absolute Maximum Ratings, the device may not be fully functional, and this may affect device reliability,functionality, performance, and shorten the device lifetime..
(2) All voltages are with respect to network GND.

6.2 ESD Protection

			VALUE	UNIT
$V_{(ESD)}$	Electrostatic discharge	Human-body model (HBM), per ANSI/ESDA/JEDEC JS-001[1].	±3000	V
		Charged-device model (CDM), per JEDEC specification JESD22-C101[2]	±1500	

(1) JEDEC document JEP155 states that 500-V HBM allows safe manufacturing with a standard ESD control process.
(2) JEDEC document JEP157 states that 250-V CDM allows safe manufacturing with a standard ESD control process.

6.3 ESD Protection, Driver

PIN		TEST CONDITIONS	TYP	UNIT
NAME	NO.			
DOUT	7, 14	HBM, per ANSI/ESDA/JEDEC JS-001	±15	kV
		IEC 61000-4-2 Air-Gap Discharge [1]	±15	
		IEC 61000-4-2 Contact Discharge [1]	±8	

(1) For D, DB, PW packages of SN65C3232E and PW package of SN75C3232E: A minimum of 1-µF capacitor is needed between VCC and GND to meet the specified IEC ESD level

6.4 ESD Protection, Receiver

PIN		TEST CONDITIONS	TYP	UNIT
NAME	NO.			
RIN	8, 13	HBM, per ANSI/ESDA/JEDEC JS-001	±15	kV
		IEC 61000-4-2 Air-Gap Discharge [1]	±15	
		IEC 61000-4-2 Contact Discharge [1]	±8	

(1) For D, DB, PW packages of SN65C3232E and PW package of SN75C3232E: A minimum of 1-µF capacitor is needed between VCC and GND to meet the specified IEC ESD level

Copyright © 2022 Texas Instruments Incorporated

6.5 Recommended Operating Conditions

see note (1)

				MIN	NOM	MAX	UNIT
	Supply voltage		V_{CC} = 3.3 V	3	3.3	3.6	V
			V_{CC} = 5 V	4.5	5	5.5	
V_{IH}	Driver high-level input voltage	DIN	V_{CC} = 3.3 V	2			V
			V_{CC} = 5 V	2.4			
V_{IL}	Driver low-level input voltage		DIN			0.8	V
V_I	Driver input voltage		DIN	0		5.5	V
	Receiver input voltage			– 25		25	
T_A	Operating free-air temperature		SN65C3232E	– 40		85	°C
			SN75C3232E	0		70	

(1) Test conditions are C1 – C4 = 0.1 μF at V_{CC} = 3.3 V ± 0.3 V; C1 = 0.047 μF, C2 – C4 = 0.33 μF at V_{CC} = 5 V ± 0.5 V (see 图 9-1).

6.6 Thermal Information, SN65C3232E

THERMAL METRIC(1)		SN65C3232E				UNIT
		PW (TSSOP)	D (SOIC)	DW (SOIC)	DB (SSOP)	
		16 Pins	16 Pins	16 Pins	16 Pins	
$R_{\theta JA}$	Junction-to-ambient thermal resistance	108.0	85.9	57.0	103.1	°C/W
$R_{\theta JC(top)}$	Junction-to-case (top) thermal resistance	39.0	43.1	33.5	49.2	°C/W
$R_{\theta JB}$	Junction-to-board thermal resistance	54.4	44.5	37.1	54.8	°C/W
ψ_{JT}	Junction-to-top characterization parameter	3.3	10.1	7.5	12.0	°C/W
ψ_{JB}	Junction-to-board characterization parameter	53.8	44.1	37.1	54.1	°C/W
$R_{\theta JC(bot)}$	Junction-to-case (bottom) thermal resistance	N/A	N/A	N/A	N/A	°C/W

(1) For more information about traditional and new thermal metrics, see the *Semiconductor and IC package thermal metrics* application report.

6.7 Thermal Information, SN75C3232E

THERMAL METRIC(1)		SN75C3232E				UNIT
		PW (TSSOP)	D (SOIC)	DW (SOIC)	DB (SSOP)	
		16 PINS	16 PINS	16 PINS	16 PINS	
$R_{\theta JA}$	Junction-to-ambient thermal resistance	108.0	82.0	57.0	46.0	°C/W
$R_{\theta JC(top)}$	Junction-to-case (top) thermal resistance	39.0	36.7	33.5	36.2	°C/W
$R_{\theta JB}$	Junction-to-board thermal resistance	54.4	33.6	37.1	43.8	°C/W
ψ_{JT}	Junction-to-top characterization parameter	3.3	4.2	7.5	4.2	°C/W
ψ_{JB}	Junction-to-board characterization parameter	53.8	33.3	37.1	42.9	°C/W
$R_{\theta JC(bot)}$	Junction-to-case (bottom) thermal resistance	N/A	N/A	N/A	N/A	°C/W

(1) For more information about traditional and new thermal metrics, see the *Semiconductor and IC package thermal metrics* application report.

6.8 Electrical Characteristics, Power

over recommended ranges of supply voltage and operating free-air temperature (unless otherwise noted)

PARAMETER		TEST CONDITIONS[2]		MIN	TYP[1]	MAX	UNIT
I_{CC}	Supply current	No load,	V_{CC} = 3.3 V or 5 V		0.3	1	mA

(1) All typical values are at V_{CC} = 3.3 V or V_{CC} = 5 V, and T_A = 25°C.
(2) Test conditions are C1 – C4 = 0.1 μF at V_{CC} = 3.3 V ± 0.3 V; C1 = 0.047 μF, C2 – C4 = 0.33 μF at V_{CC} = 5 V ± 0.5 V (see 图 9-1).

6.9 Electrical Characteristics, Driver

over recommended ranges of supply voltage and operating free-air temperature (unless otherwise noted)

PARAMETER		TEST CONDITIONS[3]		MIN	TYP[1]	MAX	UNIT
V_{OH}	High-level output voltage	DOUT at R_L = 3 kΩ to GND,	DIN = GND	5	5.5		V
V_{OL}	Low-level output voltage	DOUT at R_L = 3 kΩ to GND,	DIN = V_{CC}	–5	–5.4		V
I_{IH}	High-level input current	V_I = V_{CC}			±0.01	±1	μA
I_{IL}	Low-level input current	V_I at GND			±0.01	±1	μA
I_{OS} [2]	Short-circuit output current	V_{CC} = 3.6 V,	V_O = 0 V		±35	±60	mA
		V_{CC} = 5.5 V,	V_O = 0 V		±35	±90	
r_o	Output resistance	V_{CC}, V+, and V– = 0 V,	V_O = ±2 V	300	10M		Ω

(1) All typical values are at V_{CC} = 3.3 V or V_{CC} = 5 V, and T_A = 25°C.
(2) Short-circuit durations should be controlled to prevent exceeding the device absolute power dissipation ratings, and not more than one output should be shorted at a time.
(3) Test conditions are C1 – C4 = 0.1 μF at V_{CC} = 3.3 V ± 0.3 V; C1 = 0.047 μF, C2 – C4 = 0.33 μF at V_{CC} = 5 V ± 0.5 V (see 图 9-1) .

6.10 Electrical Characteristics, Receiver

over recommended ranges of supply voltage and operating free-air temperature (unless otherwise noted)

PARAMETER		TEST CONDITIONS[2]	MIN	TYP[1]	MAX	UNIT
V_{OH}	High-level output voltage	I_{OH} = –1 mA	V_{CC} – 0.6	V_{CC} – 0.1		V
V_{OL}	Low-level output voltage	I_{OL} = 1.6 mA			0.4	V
V_{IT+}	Positive-going input threshold voltage	V_{CC} = 3.3 V		1.5	2.4	V
		V_{CC} = 5 V		1.8	2.4	
V_{IT-}	Negative-going input threshold voltage	V_{CC} = 3.3 V	0.6	1.2		V
		V_{CC} = 5 V	0.8	1.5		
V_{hys}	Input hysteresis (V_{IT+} – V_{IT-})			0.3		V
r_i	Input resistance	V_I = ±3 V to ±25 V	3	5	7	kΩ

(1) All typical values are at V_{CC} = 3.3 V or V_{CC} = 5 V, and T_A = 25°C.
(2) Test conditions are C1 – C4 = 0.1 μF at V_{CC} = 3.3 V ± 0.3 V; C1 = 0.047 μF, C2 – C4 = 0.33 μF at V_{CC} = 5 V ± 0.5 V (see 图 9-1).

Copyright © 2022 Texas Instruments Incorporated

6.11 Switching Characteristics, Driver

over recommended ranges of supply voltage and operating free-air temperature (unless otherwise noted)

PARAMETER		TEST CONDITIONS[3]			MIN	TYP[1]	MAX	UNIT
	Maximum data rate (see 图 7-1)	R_L = 3 kΩ, One DOUT switching	C_L = 250 pF,	V_{CC} = 3 V to 4.5 V	1000			kbit/s
			C_L = 1000 pF,	V_{CC} = 3.5 V to 5.5 V	1000			
$t_{sk(p)}$	Pulse skew[2]	C_L = 150 pF to 2500 pF, R_L = 3 kΩ to 7 kΩ, See 图 7-2				300		ns
SR(tr)	Slew rate, transition region (see 图 7-1)	R_L = 3 kΩ to 7 kΩ, C_L = 150 pF to 1000 pF, V_{CC} = 3.3 V			14		150	V/μs

(1) All typical values are at V_{CC} = 3.3 V or V_{CC} = 5 V, and T_A = 25°C.
(2) Pulse skew is defined as $|t_{PLH} - t_{PHL}|$ of each channel of the same device.
(3) Test conditions are C1 – C4 = 0.1 μF at V_{CC} = 3.3 V ± 0.3 V; C1 = 0.047 μF, C2 – C4 = 0.33 μF at V_{CC} = 5 V ± 0.5 V (see 图 9-1).

6.12 Switching Characteristics, Receiver

over recommended ranges of supply voltage and operating free-air temperature (unless otherwise noted)

PARAMETER		TEST CONDITIONS[3]	TYP[1]	UNIT
t_{PLH}	Propagation delay time, low- to high-level output	C_L = 150 pF	300	ns
t_{PHL}	Propagation delay time, high- to low-level output		300	ns
$t_{sk(p)}$	Pulse skew[2]		300	ns

(1) All typical values are at V_{CC} = 3.3 V or V_{CC} = 5 V, and T_A = 25°C.
(2) Pulse skew is defined as $|t_{PLH} - t_{PHL}|$ of each channel of the same device.
(3) Test conditions are C1 – C4 = 0.1 μF at V_{CC} = 3.3 V ± 0.3 V; C1 = 0.047 μF, C2 – C4 = 0.33 μF at V_{CC} = 5 V ± 0.5 V (see 图 9-1).

Copyright © 2022 Texas Instruments Incorporated

7 Parameter Measurement Information

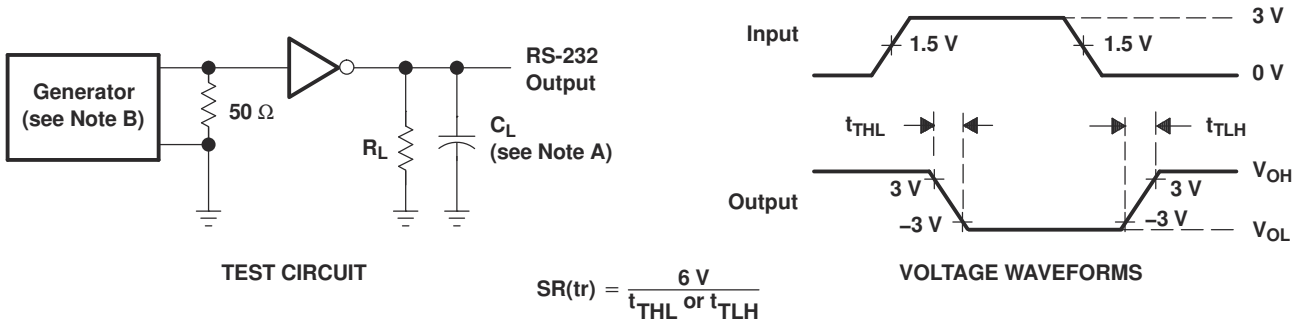

$$SR(tr) = \frac{6\ V}{t_{THL}\ or\ t_{TLH}}$$

NOTES: A. C_L includes probe and jig capacitance.
B. The pulse generator has the following characteristics: PRR = 250 kbit/s, Z_O = 50 Ω, 50% duty cycle, $t_r \leq 10$ ns, $t_f \leq 10$ ns.

图 7-1. Driver Slew Rate

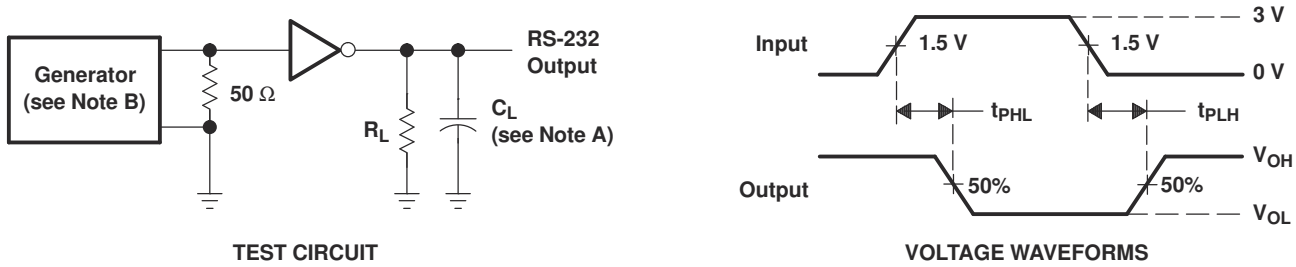

NOTES: A. C_L includes probe and jig capacitance.
B. The pulse generator has the following characteristics: PRR = 250 kbit/s, Z_O = 50 Ω, 50% duty cycle, $t_r \leq 10$ ns, $t_f \leq 10$ ns.

图 7-2. Driver Pulse Skew

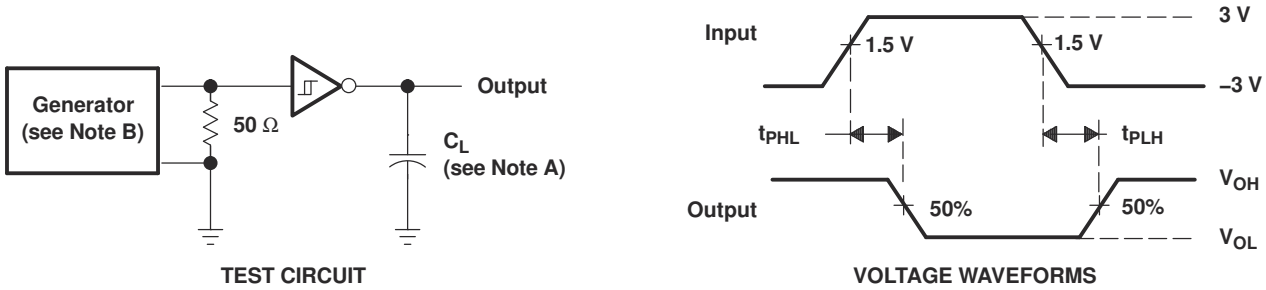

NOTES: A. C_L includes probe and jig capacitance.
B. The pulse generator has the following characteristics: Z_O = 50 Ω, 50% duty cycle, $t_r \leq 10$ ns, $t_f \leq 10$ ns.

图 7-3. Receiver Propagation Delay Times

Copyright © 2022 Texas Instruments Incorporated

8 Detailed Description

8.1 Overview

The SNx5C3232E device consists of two line drivers, two line receivers, and a dual charge-pump circuit with ±15-kV IEC ESD protection between serial-port connection terminals and GND. The device meets the requirements of TIA/EIA-232-F and provides the electrical interface between an asynchronous communication controller and the serial-port connector. The charge pump and four small external capacitors allow operation from one 3-V to 5.5-V supply. The device operates at data signaling rates up to 1 Mbps and a maximum of 150-V/μs driver output slew rate. Outputs are protected against shorts to ground.

8.1.1 Functional Block Diagram

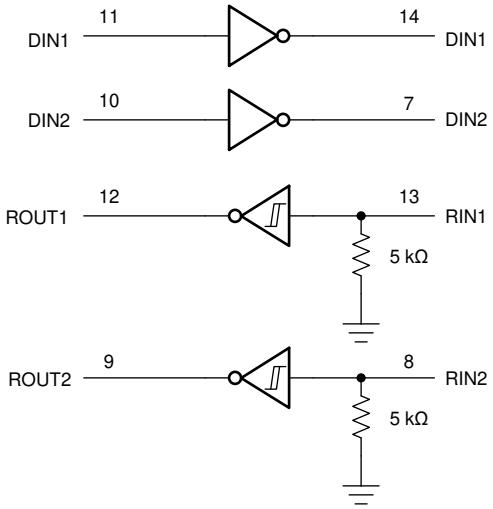

8.1.2 Feature Description

8.1.2.1 Power

The power block increases, inverts, and regulates voltage at V+ and V– pins using a charge pump that requires four external capacitors.

8.1.2.2 RS232 Driver

Two drivers interface the standard logic level to RS232 levels. Both DIN inputs must be valid high or low.

8.1.2.3 RS232 Receiver

Two receivers interface RS232 levels to standard logic levels. An open input results in a high output on ROUT. Each RIN input includes an internal standard RS232 load.

8.1.3 Device Functional Modes

表 8-1. Each Driver

INPUT DIN[(1)]	OUTPUT DOUT
L	H
H	L

(1) H = high level, L = low level

表 8-2. Each Receiver

INPUT RIN[(1)]	OUTPUT ROUT
L	H
H	L
Open	H

(1) H = high level, L = low level,
Open = input disconnected or connected driver off

8.1.3.1 V_{CC} Powered by 3 V to 5.5 V

The device is in normal operation.

8.1.3.2 V_{CC} Unpowered, V_{CC} = 0 V

When the SNx5C3232E device is unpowered, it can be safely connected to an active remote RS232 device.

Copyright © 2022 Texas Instruments Incorporated

9 Application and Implenentation

Note

Information in the following applications sections is not part of the TI component specification, and TI does not warrant its accuracy or completeness. TI’s customers are responsible for determining suitability of components for their purposes, as well as validating and testing their design implementation to confirm system functionality.

9.1 Application Information

The SNx5C3232E device is designed to convert single-ended signals into RS232-compatible signals, and vice-versa. This device can be used in any application where an RS232 line driver or receiver is required.

ROUT and DIN connect to UART or general-purpose logic lines. RIN and DOUT lines connect to a RS232 connector or cable.

Typical Application

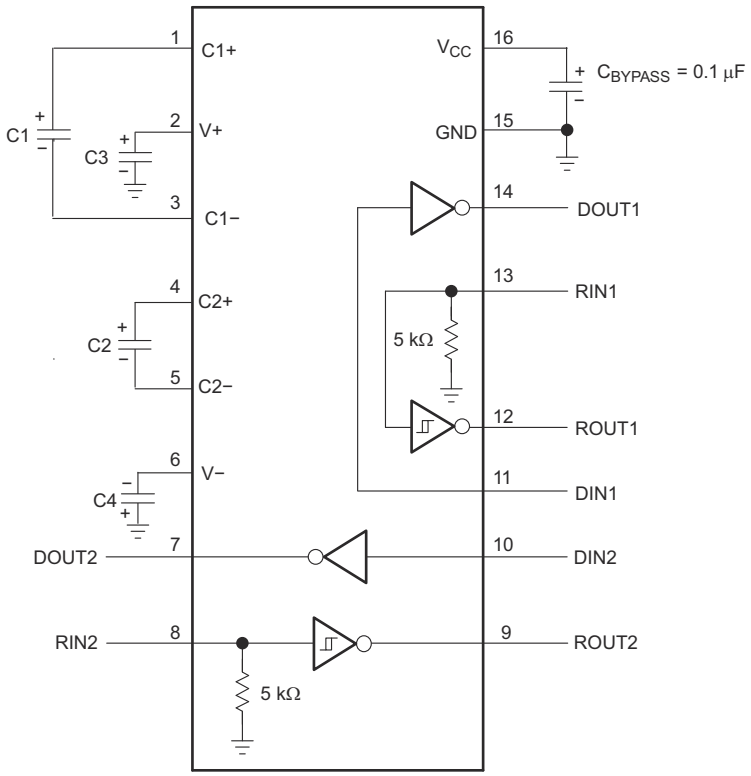

A. C3 can be connected to V_{CC} or GND.

图 9-1. Typical Operating Circuit and Capacitor Values

表 9-1. V_{CC} vs Capacitor Values

V_{CC}	C1	C2, C3, C4
3.3 V ± 0.3 V	0.1 µF	0.1 µF
5 V ± 0.5 V	0.047 µF	0.33 µF
3 V to 5.5 V	0.1 µF	0.47 µF

9.2.1 Design Requirements

- Recommended V_{CC} is 3.3 V or 5 V
  - 3 V to 5.5 V is also possible
- Maximum recommended bit rate is 1 Mbps

9.2.2 Detailed Design Procedure

All DIN inputs must be connected to valid low or high logic levels. Select capacitor values based on V_{CC} level for best performance.

9.2.3 Application Performance Plots

VCC must be between 3 V and 5.5 V. Charge pump capacitors must be chosen using V_{CC} vs Capacitor Values

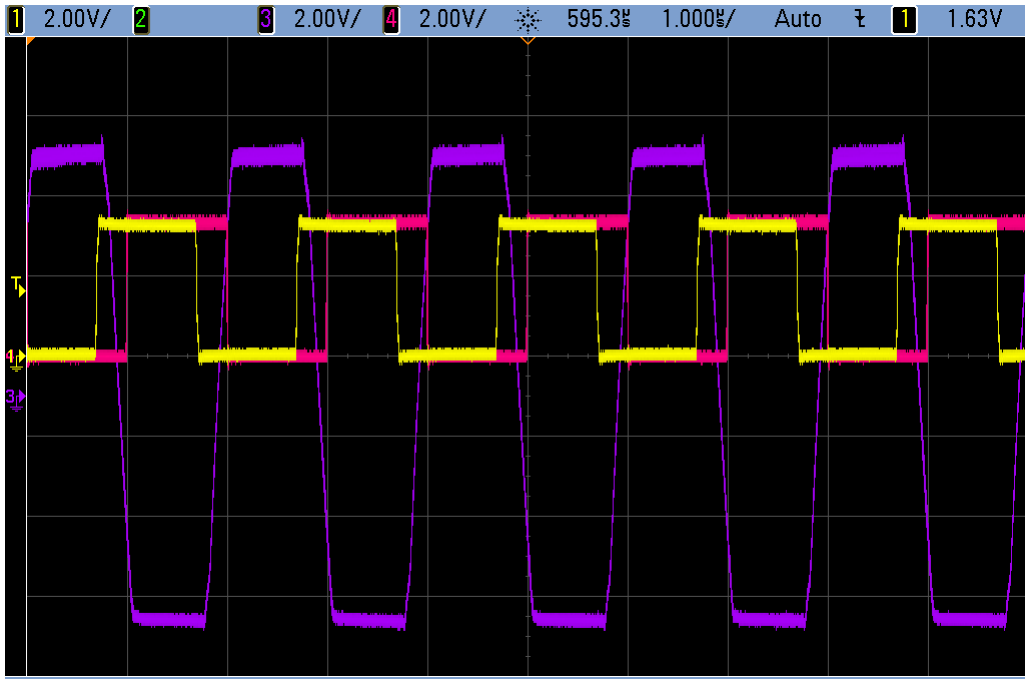

图 9-2. 1 Mbps timing waveform from driver input to receiver output loopback. DOUT to RIN trace is in purple, DIN trace is in yellow and ROUT trace is in pink

Copyright © 2022 Texas Instruments Incorporated

10 Power Supply Recommendations

The supply voltage, V_{CC}, should be between 3 V and 5.5 V. Select the charge-pump capacitors using V_{CC} vs Capacitor Values.

11 Layout

11.1 Layout Guidelines

Keep the external capacitor traces short, specifically on the C1 and C2 nodes that have the fastest rise and fall times.

11.2 Layout Example

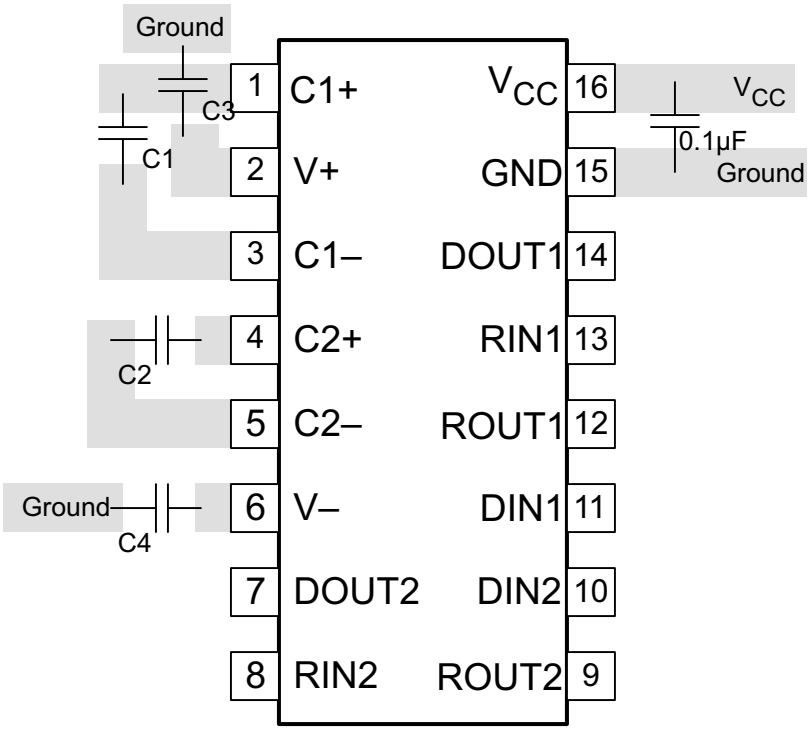

图 11-1. Layout Diagram

12 Device and Documentation Support

TI offers an extensive line of development tools. Tools and software to evaluate the performance of the device, generate code, and develop solutions are listed below.

12.1 接收文档更新通知

要接收文档更新通知，请导航至 ti.com 上的器件产品文件夹。点击*订阅更新* 进行注册，即可每周接收产品信息更改摘要。有关更改的详细信息，请查看任何已修订文档中包含的修订历史记录。

12.2 支持资源

TI E2E™ 支持论坛是工程师的重要参考资料，可直接从专家获得快速、经过验证的解答和设计帮助。搜索现有解答或提出自己的问题可获得所需的快速设计帮助。

链接的内容由各个贡献者“按原样”提供。这些内容并不构成 TI 技术规范，并且不一定反映 TI 的观点；请参阅 TI 的《使用条款》。

12.3 Trademarks

TI E2E™ is a trademark of Texas Instruments.
所有商标均为其各自所有者的财产。

12.4 Electrostatic Discharge Caution

This integrated circuit can be damaged by ESD. Texas Instruments recommends that all integrated circuits be handled with appropriate precautions. Failure to observe proper handling and installation procedures can cause damage.

ESD damage can range from subtle performance degradation to complete device failure. Precision integrated circuits may be more susceptible to damage because very small parametric changes could cause the device not to meet its published specifications.

12.5 术语表

TI 术语表	本术语表列出并解释了术语、首字母缩略词和定义。

13 Mechanical, Packaging, and Orderable Information

The following pages include mechanical, packaging, and orderable information. This information is the most current data available for the designated devices. This data is subject to change without notice and revision of this document. For browser-based versions of this data sheet, refer to the left-hand navigation.

Copyright © 2022 Texas Instruments Incorporated

重要声明和免责声明

TI 提供技术和可靠性数据（包括数据表）、设计资源（包括参考设计）、应用或其他设计建议、网络工具、安全信息和其他资源，不保证没有瑕疵且不做出任何明示或暗示的担保，包括但不限于对适销性、某特定用途方面的适用性或不侵犯任何第三方知识产权的暗示担保。

这些资源可供使用 TI 产品进行设计的熟练开发人员使用。您将自行承担以下全部责任：(1) 针对您的应用选择合适的 TI 产品，(2) 设计、验证并测试您的应用，(3) 确保您的应用满足相应标准以及任何其他安全、安保或其他要求。这些资源如有变更，恕不另行通知。TI 授权您仅可将这些资源用于研发本资源所述的 TI 产品的应用。严禁对这些资源进行其他复制或展示。您无权使用任何其他 TI 知识产权或任何第三方知识产权。您应全额赔偿因在这些资源的使用中对 TI 及其代表造成的任何索赔、损害、成本、损失和债务，TI 对此概不负责。

TI 提供的产品受 TI 的销售条款 (https:www.ti.com/legal/termsofsale.html) 或 ti.com 上其他适用条款/TI 产品随附的其他适用条款的约束。TI 提供这些资源并不会扩展或以其他方式更改 TI 针对 TI 产品发布的适用的担保或担保免责声明。

邮寄地址：Texas Instruments, Post Office Box 655303, Dallas, Texas 75265
Copyright © 2021，德州仪器 (TI) 公司

PACKAGING INFORMATION

Orderable part number	Status (1)	Material type (2)	Package | Pins	Package qty | Carrier	RoHS (3)	Lead finish/ Ball material (4)	MSL rating/ Peak reflow (5)	Op temp (°C)	Part marking (6)
SN65C3232EDBR	Active	Production	SSOP (DB) | 16	2000 | LARGE T&R	Yes	NIPDAU	Level-1-260C-UNLIM	-40 to 85	MU232E
SN65C3232EDBR.A	Active	Production	SSOP (DB) | 16	2000 | LARGE T&R	Yes	NIPDAU	Level-1-260C-UNLIM	-40 to 85	MU232E
SN65C3232EDBRG4	Active	Production	SSOP (DB) | 16	2000 | LARGE T&R	Yes	NIPDAU	Level-1-260C-UNLIM	-40 to 85	MU232E
SN65C3232EDR	Active	Production	SOIC (D) | 16	2500 | LARGE T&R	Yes	NIPDAU	Level-1-260C-UNLIM	-40 to 85	65C3232E
SN65C3232EDR.A	Active	Production	SOIC (D) | 16	2500 | LARGE T&R	Yes	NIPDAU	Level-1-260C-UNLIM	-40 to 85	65C3232E
SN65C3232EDRG4	Active	Production	SOIC (D) | 16	2500 | LARGE T&R	Yes	NIPDAU	Level-1-260C-UNLIM	-40 to 85	65C3232E
SN65C3232EDW	Active	Production	SOIC (DW) | 16	40 | TUBE	Yes	NIPDAU	Level-1-260C-UNLIM	-40 to 85	65C3232E
SN65C3232EDW.A	Active	Production	SOIC (DW) | 16	40 | TUBE	Yes	NIPDAU	Level-1-260C-UNLIM	-40 to 85	65C3232E
SN65C3232EDWR	Active	Production	SOIC (DW) | 16	2000 | LARGE T&R	Yes	NIPDAU	Level-1-260C-UNLIM	-40 to 85	65C3232E
SN65C3232EDWR.A	Active	Production	SOIC (DW) | 16	2000 | LARGE T&R	Yes	NIPDAU	Level-1-260C-UNLIM	-40 to 85	65C3232E
SN65C3232EPWR	Active	Production	TSSOP (PW) | 16	2000 | LARGE T&R	Yes	NIPDAU | SN	Level-1-260C-UNLIM	-40 to 85	MU232E
SN65C3232EPWR.A	Active	Production	TSSOP (PW) | 16	2000 | LARGE T&R	Yes	NIPDAU	Level-1-260C-UNLIM	-40 to 85	MU232E
SN65C3232EPWRG4	Active	Production	TSSOP (PW) | 16	2000 | LARGE T&R	Yes	NIPDAU	Level-1-260C-UNLIM	-40 to 85	MU232E
SN65C3232EPWRG4.A	Active	Production	TSSOP (PW) | 16	2000 | LARGE T&R	Yes	NIPDAU	Level-1-260C-UNLIM	-40 to 85	MU232E
SN75C3232EDW	Active	Production	SOIC (DW) | 16	40 | TUBE	Yes	NIPDAU	Level-1-260C-UNLIM	0 to 70	75C3232E
SN75C3232EDW.A	Active	Production	SOIC (DW) | 16	40 | TUBE	Yes	NIPDAU	Level-1-260C-UNLIM	0 to 70	75C3232E
SN75C3232EDWR	Active	Production	SOIC (DW) | 16	2000 | LARGE T&R	Yes	NIPDAU	Level-1-260C-UNLIM	0 to 70	75C3232E
SN75C3232EDWR.A	Active	Production	SOIC (DW) | 16	2000 | LARGE T&R	Yes	NIPDAU	Level-1-260C-UNLIM	0 to 70	75C3232E
SN75C3232EPWR	Active	Production	TSSOP (PW) | 16	2000 | LARGE T&R	Yes	NIPDAU | SN	Level-1-260C-UNLIM	0 to 70	MY232E
SN75C3232EPWR.A	Active	Production	TSSOP (PW) | 16	2000 | LARGE T&R	Yes	NIPDAU	Level-1-260C-UNLIM	0 to 70	MY232E

(1) **Status:** For more details on status, see our product life cycle.

(2) **Material type:** When designated, preproduction parts are prototypes/experimental devices, and are not yet approved or released for full production. Testing and final process, including without limitation quality assurance, reliability performance testing, and/or process qualification, may not yet be complete, and this item is subject to further changes or possible discontinuation. If available for ordering, purchases will be subject to an additional waiver at checkout, and are intended for early internal evaluation purposes only. These items are sold without warranties of any kind.

(3) **RoHS values:** Yes, No, RoHS Exempt. See the TI RoHS Statement for additional information and value definition.

(4) **Lead finish/Ball material:** Parts may have multiple material finish options. Finish options are separated by a vertical ruled line. Lead finish/Ball material values may wrap to two lines if the finish value exceeds the maximum column width.

(5) **MSL rating/Peak reflow:** The moisture sensitivity level ratings and peak solder (reflow) temperatures. In the event that a part has multiple moisture sensitivity ratings, only the lowest level per JEDEC standards is shown. Refer to the shipping label for the actual reflow temperature that will be used to mount the part to the printed circuit board.

(6) **Part marking:** There may be an additional marking, which relates to the logo, the lot trace code information, or the environmental category of the part.

Multiple part markings will be inside parentheses. Only one part marking contained in parentheses and separated by a "~" will appear on a part. If a line is indented then it is a continuation of the previous line and the two combined represent the entire part marking for that device.

Important Information and Disclaimer: The information provided on this page represents TI's knowledge and belief as of the date that it is provided. TI bases its knowledge and belief on information provided by third parties, and makes no representation or warranty as to the accuracy of such information. Efforts are underway to better integrate information from third parties. TI has taken and continues to take reasonable steps to provide representative and accurate information but may not have conducted destructive testing or chemical analysis on incoming materials and chemicals. TI and TI suppliers consider certain information to be proprietary, and thus CAS numbers and other limited information may not be available for release.

In no event shall TI's liability arising out of such information exceed the total purchase price of the TI part(s) at issue in this document sold by TI to Customer on an annual basis.

TAPE AND REEL INFORMATION

REEL DIMENSIONS

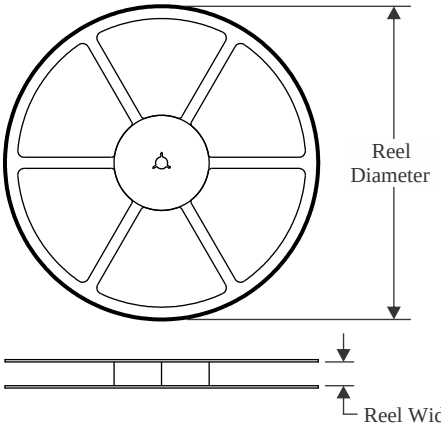

TAPE DIMENSIONS

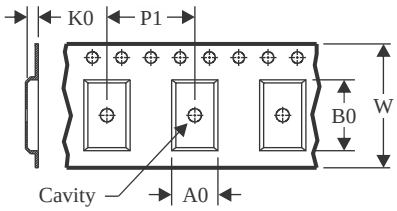

A0	Dimension designed to accommodate the component width
B0	Dimension designed to accommodate the component length
K0	Dimension designed to accommodate the component thickness
W	Overall width of the carrier tape
P1	Pitch between successive cavity centers

QUADRANT ASSIGNMENTS FOR PIN 1 ORIENTATION IN TAPE

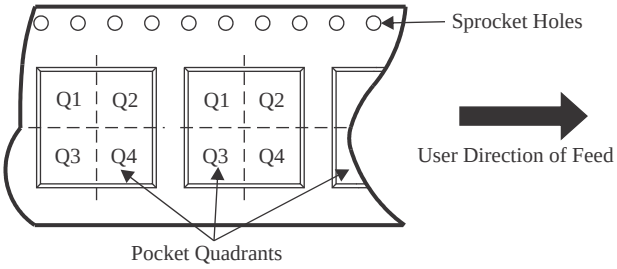

*All dimensions are nominal

Device	Package Type	Package Drawing	Pins	SPQ	Reel Diameter (mm)	Reel Width W1 (mm)	A0 (mm)	B0 (mm)	K0 (mm)	P1 (mm)	W (mm)	Pin1 Quadrant
SN65C3232EDBR	SSOP	DB	16	2000	330.0	16.4	8.35	6.6	2.4	12.0	16.0	Q1
SN65C3232EDR	SOIC	D	16	2500	330.0	16.4	6.5	10.3	2.1	8.0	16.0	Q1
SN65C3232EDWR	SOIC	DW	16	2000	330.0	16.4	10.75	10.7	2.7	12.0	16.0	Q1
SN65C3232EPWR	TSSOP	PW	16	2000	330.0	12.4	6.9	5.6	1.6	8.0	12.0	Q1
SN65C3232EPWR	TSSOP	PW	16	2000	330.0	12.4	6.9	5.3	1.6	8.0	12.0	Q1
SN65C3232EPWR	TSSOP	PW	16	2000	330.0	12.4	6.9	5.6	1.6	8.0	12.0	Q1
SN65C3232EPWRG4	TSSOP	PW	16	2000	330.0	12.4	6.9	5.6	1.6	8.0	12.0	Q1
SN75C3232EDWR	SOIC	DW	16	2000	330.0	16.4	10.75	10.7	2.7	12.0	16.0	Q1
SN75C3232EPWR	TSSOP	PW	16	2000	330.0	12.4	6.9	5.3	1.6	8.0	12.0	Q1
SN75C3232EPWR	TSSOP	PW	16	2000	330.0	12.4	6.9	5.6	1.6	8.0	12.0	Q1
SN75C3232EPWR	TSSOP	PW	16	2000	330.0	12.4	6.9	5.6	1.6	8.0	12.0	Q1

TAPE AND REEL BOX DIMENSIONS

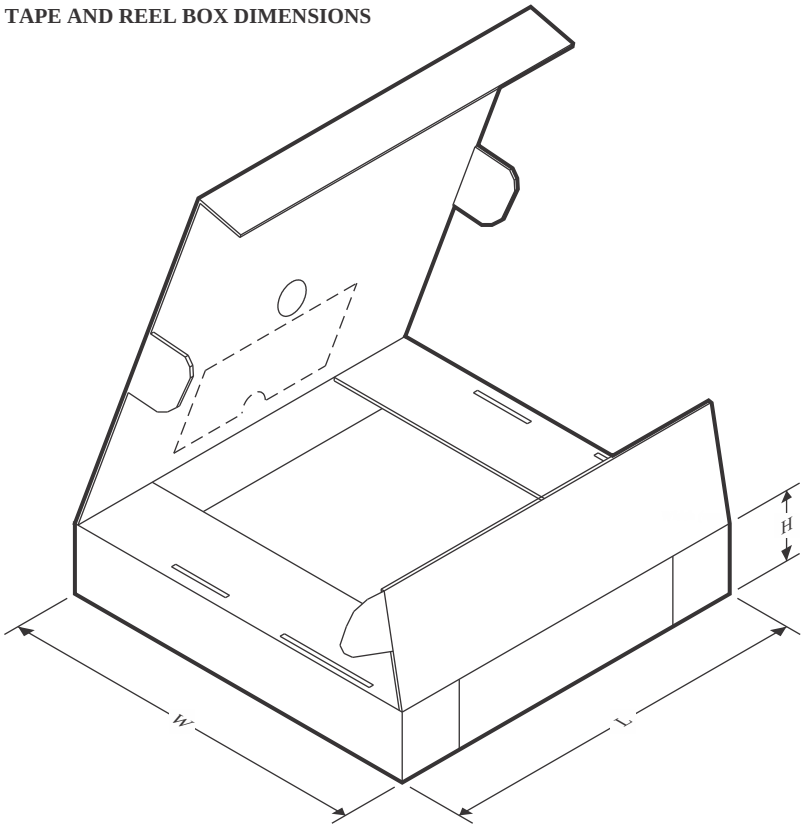

*All dimensions are nominal

Device	Package Type	Package Drawing	Pins	SPQ	Length (mm)	Width (mm)	Height (mm)
SN65C3232EDBR	SSOP	DB	16	2000	353.0	353.0	32.0
SN65C3232EDR	SOIC	D	16	2500	353.0	353.0	32.0
SN65C3232EDWR	SOIC	DW	16	2000	350.0	350.0	43.0
SN65C3232EPWR	TSSOP	PW	16	2000	356.0	356.0	35.0
SN65C3232EPWR	TSSOP	PW	16	2000	367.0	367.0	35.0
SN65C3232EPWR	TSSOP	PW	16	2000	353.0	353.0	32.0
SN65C3232EPWRG4	TSSOP	PW	16	2000	353.0	353.0	32.0
SN75C3232EDWR	SOIC	DW	16	2000	350.0	350.0	43.0
SN75C3232EPWR	TSSOP	PW	16	2000	367.0	367.0	35.0
SN75C3232EPWR	TSSOP	PW	16	2000	353.0	353.0	32.0
SN75C3232EPWR	TSSOP	PW	16	2000	356.0	356.0	35.0

TUBE

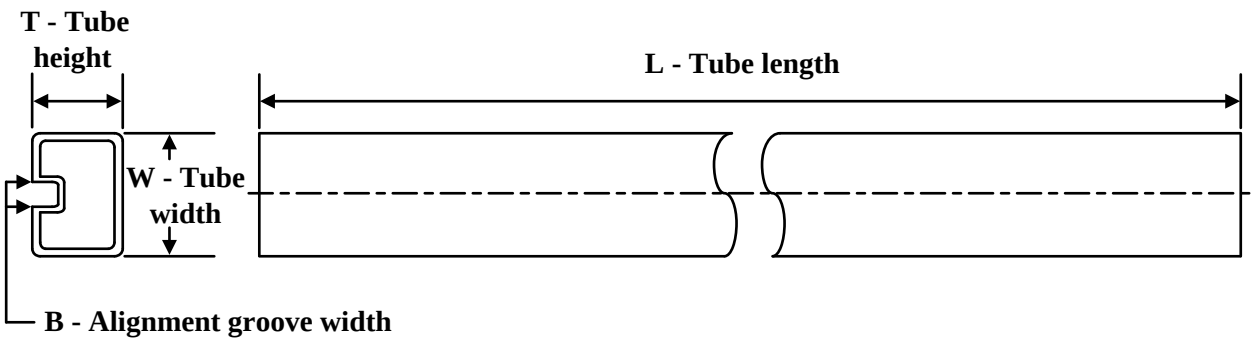

*All dimensions are nominal

Device	Package Name	Package Type	Pins	SPQ	L (mm)	W (mm)	T (µm)	B (mm)
SN65C3232EDW	DW	SOIC	16	40	506.98	12.7	4826	6.6
SN65C3232EDW.A	DW	SOIC	16	40	506.98	12.7	4826	6.6
SN75C3232EDW	DW	SOIC	16	40	506.98	12.7	4826	6.6
SN75C3232EDW.A	DW	SOIC	16	40	506.98	12.7	4826	6.6

GENERIC PACKAGE VIEW

DW 16

SOIC - 2.65 mm max height

7.5 x 10.3, 1.27 mm pitch

SMALL OUTLINE INTEGRATED CIRCUIT

This image is a representation of the package family, actual package may vary.
Refer to the product data sheet for package details.

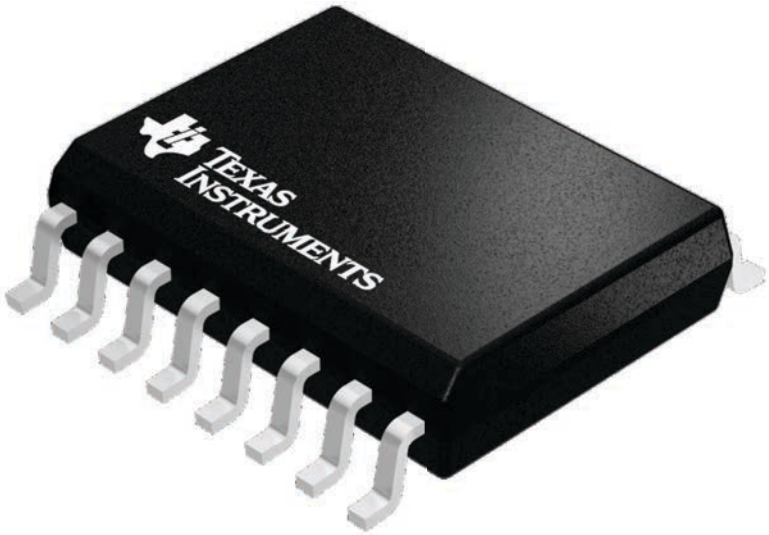

4224780/A

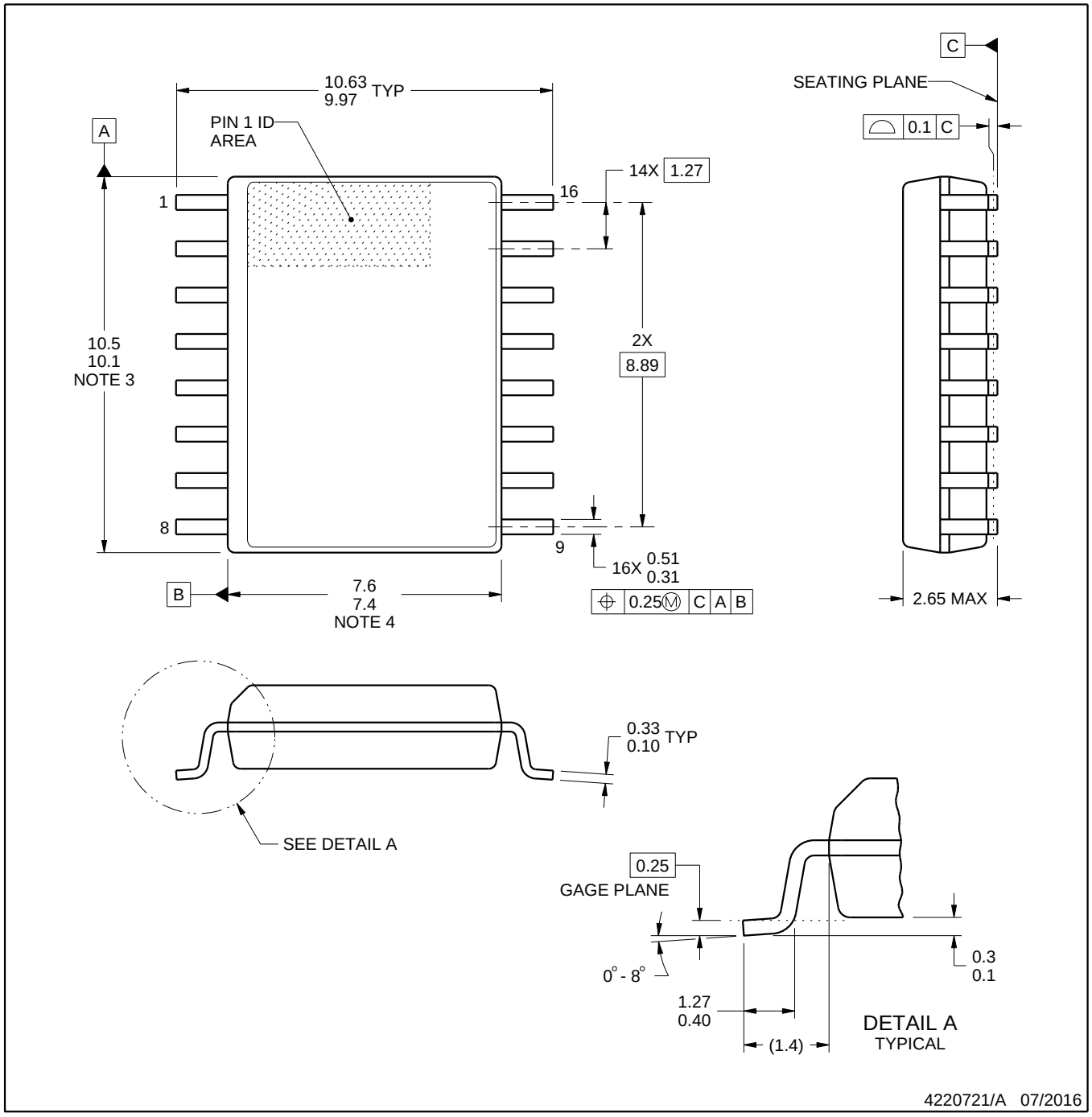

NOTES:

1. All linear dimensions are in millimeters. Dimensions in parenthesis are for reference only. Dimensioning and tolerancing per ASME Y14.5M.
2. This drawing is subject to change without notice.
3. This dimension does not include mold flash, protrusions, or gate burrs. Mold flash, protrusions, or gate burrs shall not exceed 0.15 mm, per side.
4. This dimension does not include interlead flash. Interlead flash shall not exceed 0.25 mm, per side.
5. Reference JEDEC registration MS-013.

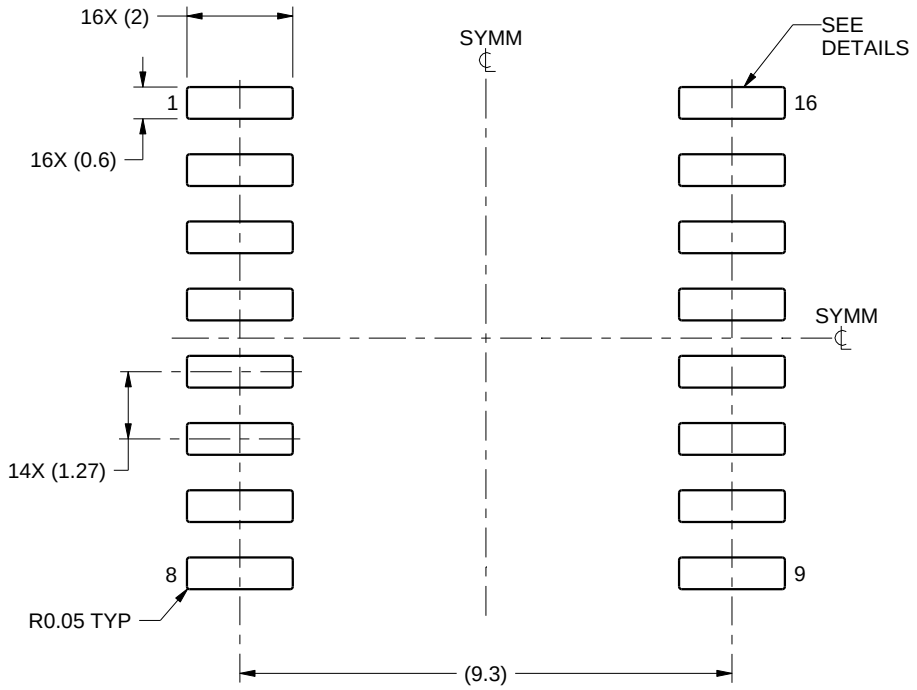

LAND PATTERN EXAMPLE
SCALE:7X

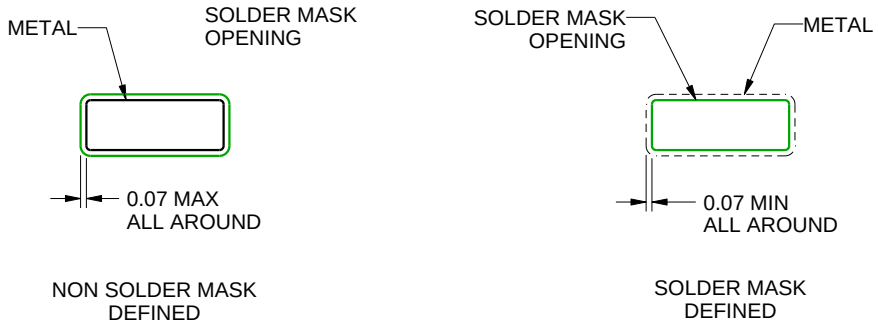

SOLDER MASK DETAILS

4220721/A 07/2016

NOTES: (continued)

6. Publication IPC-7351 may have alternate designs.
7. Solder mask tolerances between and around signal pads can vary based on board fabrication site.

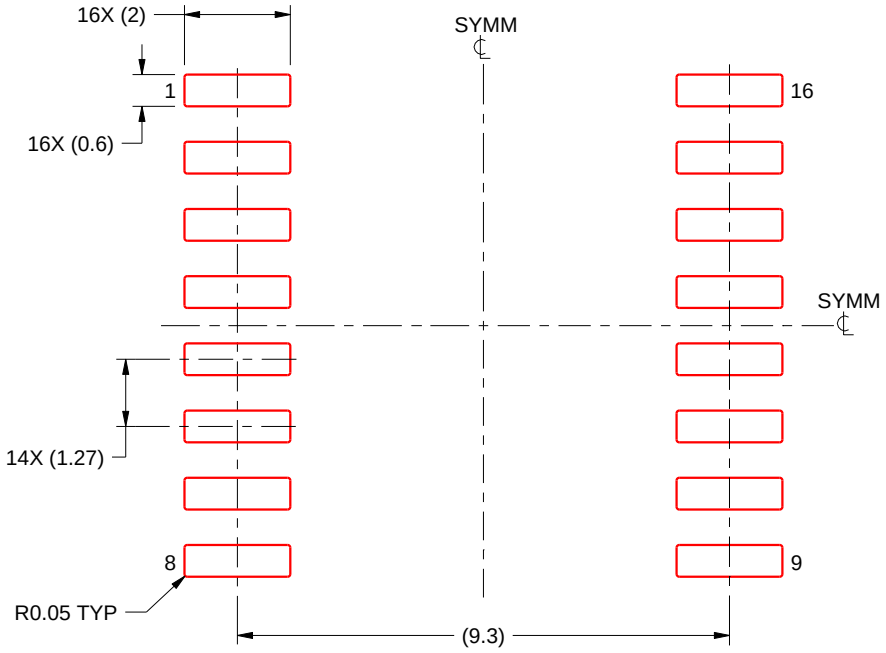

SOLDER PASTE EXAMPLE
BASED ON 0.125 mm THICK STENCIL
SCALE:7X

4220721/A 07/2016

NOTES: (continued)

8. Laser cutting apertures with trapezoidal walls and rounded corners may offer better paste release. IPC-7525 may have alternate design recommendations.
9. Board assembly site may have different recommendations for stencil design.

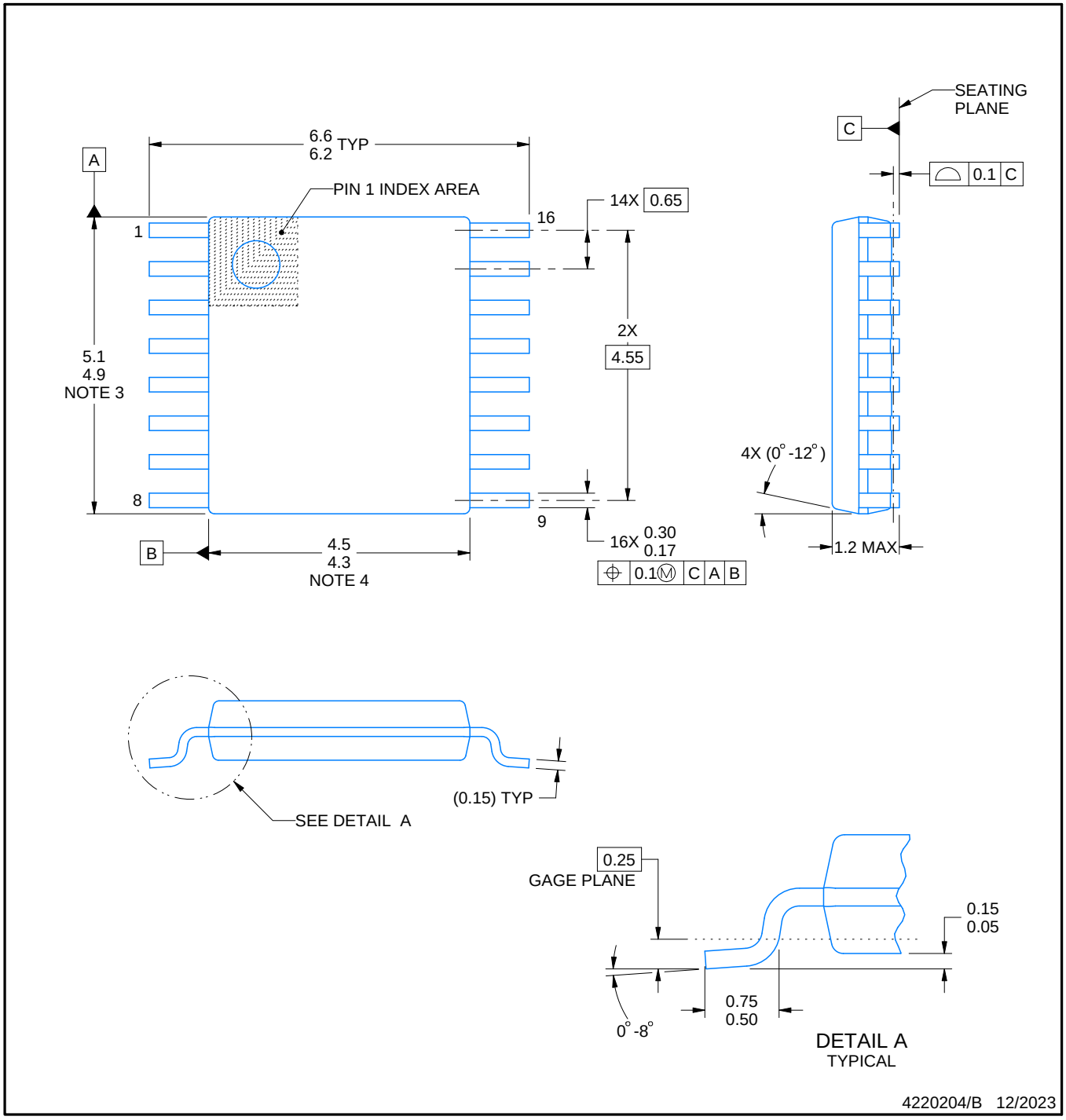

NOTES:

1. All linear dimensions are in millimeters. Any dimensions in parenthesis are for reference only. Dimensioning and tolerancing per ASME Y14.5M.
2. This drawing is subject to change without notice.
3. This dimension does not include mold flash, protrusions, or gate burrs. Mold flash, protrusions, or gate burrs shall not exceed 0.15 mm per side.
4. This dimension does not include interlead flash. Interlead flash shall not exceed 0.25 mm per side.
5. Reference JEDEC registration MO-153.

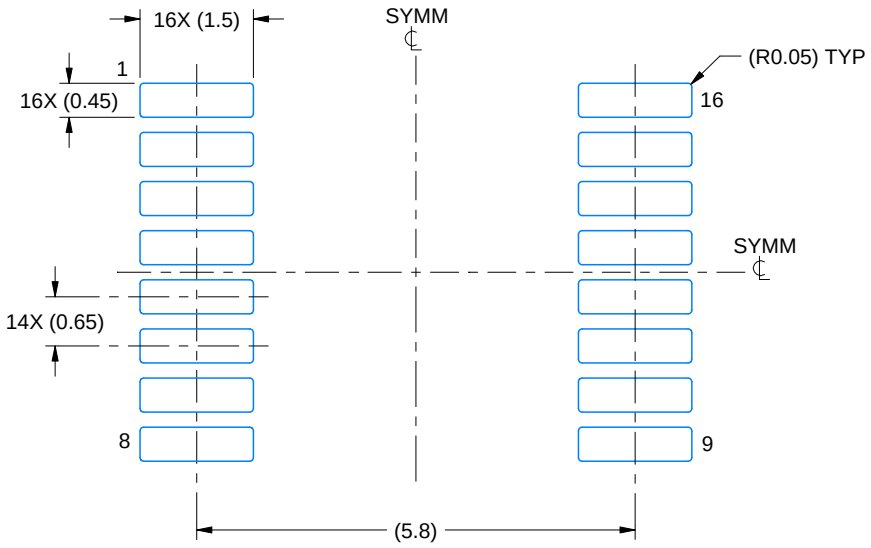

LAND PATTERN EXAMPLE
EXPOSED METAL SHOWN
SCALE: 10X

NON-SOLDER MASK DEFINED (PREFERRED)

SOLDER MASK DEFINED

SOLDER MASK DETAILS

4220204/B 12/2023

NOTES: (continued)

6. Publication IPC-7351 may have alternate designs.
7. Solder mask tolerances between and around signal pads can vary based on board fabrication site.

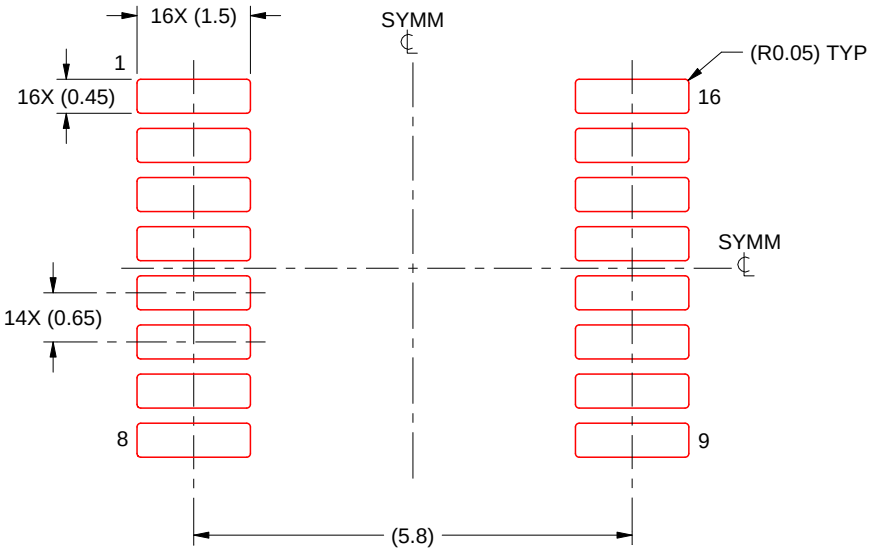

SOLDER PASTE EXAMPLE
BASED ON 0.125 mm THICK STENCIL
SCALE: 10X

4220204/B 12/2023

NOTES: (continued)

8. Laser cutting apertures with trapezoidal walls and rounded corners may offer better paste release. IPC-7525 may have alternate design recommendations.
9. Board assembly site may have different recommendations for stencil design.

D (R–PDSO–G16) PLASTIC SMALL OUTLINE

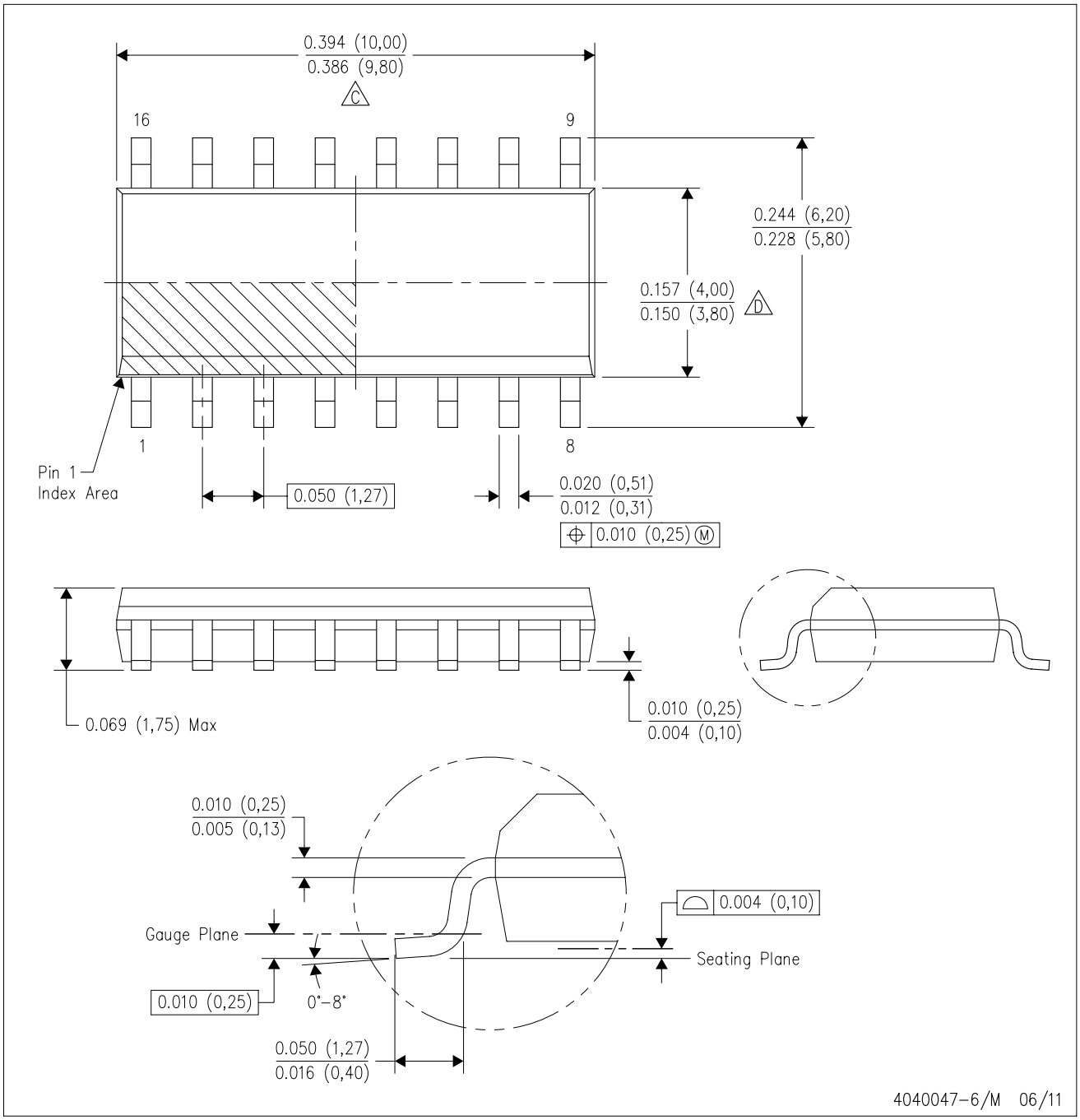

NOTES:
A. All linear dimensions are in inches (millimeters).
B. This drawing is subject to change without notice.
C. Body length does not include mold flash, protrusions, or gate burrs. Mold flash, protrusions, or gate burrs shall not exceed 0.006 (0,15) each side.
D. Body width does not include interlead flash. Interlead flash shall not exceed 0.017 (0,43) each side.
E. Reference JEDEC MS–012 variation AC.

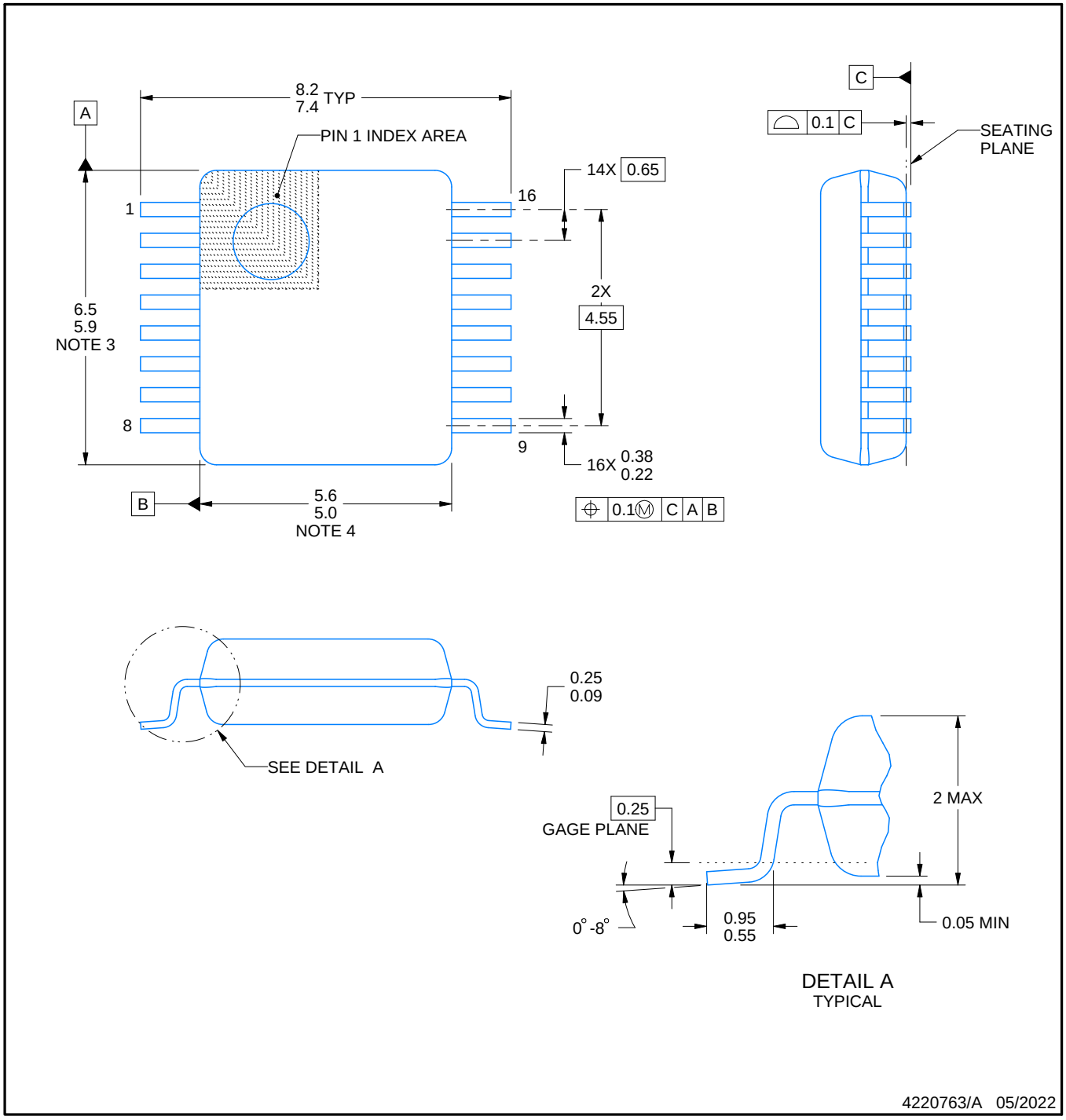

NOTES:

1. All linear dimensions are in millimeters. Any dimensions in parenthesis are for reference only. Dimensioning and tolerancing per ASME Y14.5M.
2. This drawing is subject to change without notice.
3. This dimension does not include mold flash, protrusions, or gate burrs. Mold flash, protrusions, or gate burrs shall not exceed 0.15 mm per side.
4. Reference JEDEC registration MO-150.

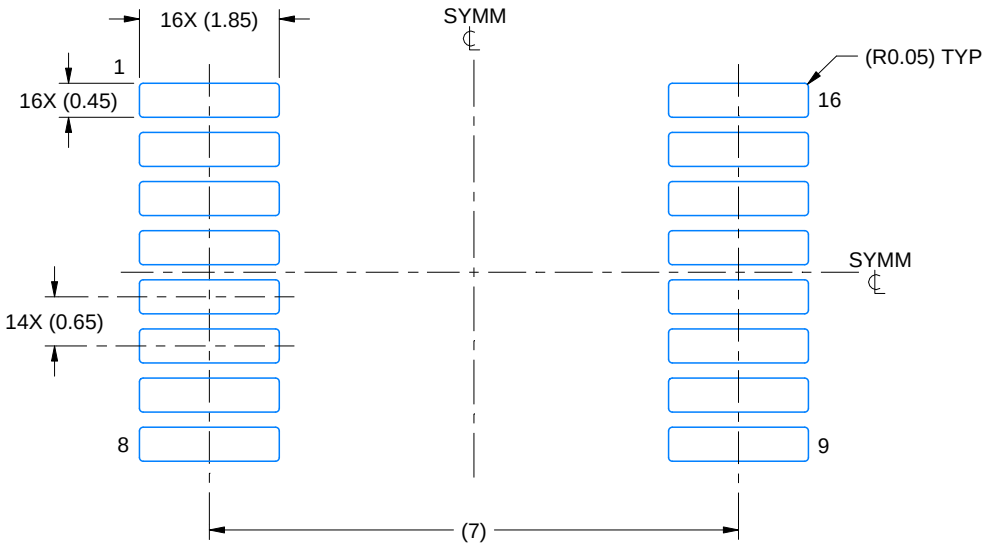

LAND PATTERN EXAMPLE
EXPOSED METAL SHOWN
SCALE: 10X

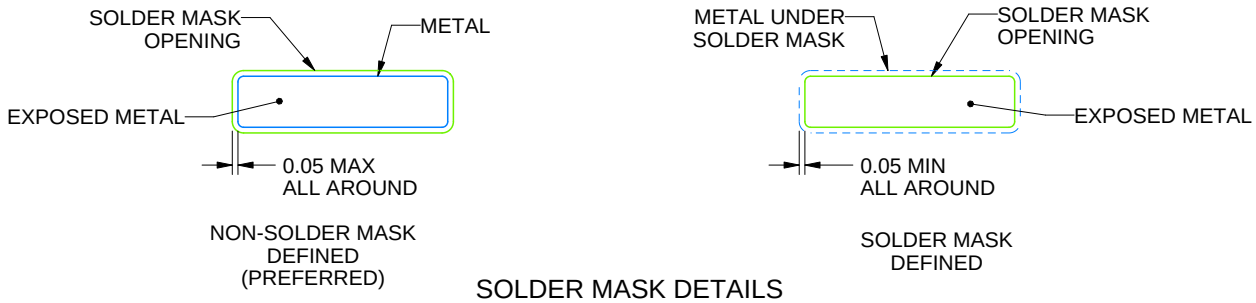

SOLDER MASK DETAILS

4220763/A 05/2022

NOTES: (continued)

5. Publication IPC-7351 may have alternate designs.
6. Solder mask tolerances between and around signal pads can vary based on board fabrication site.

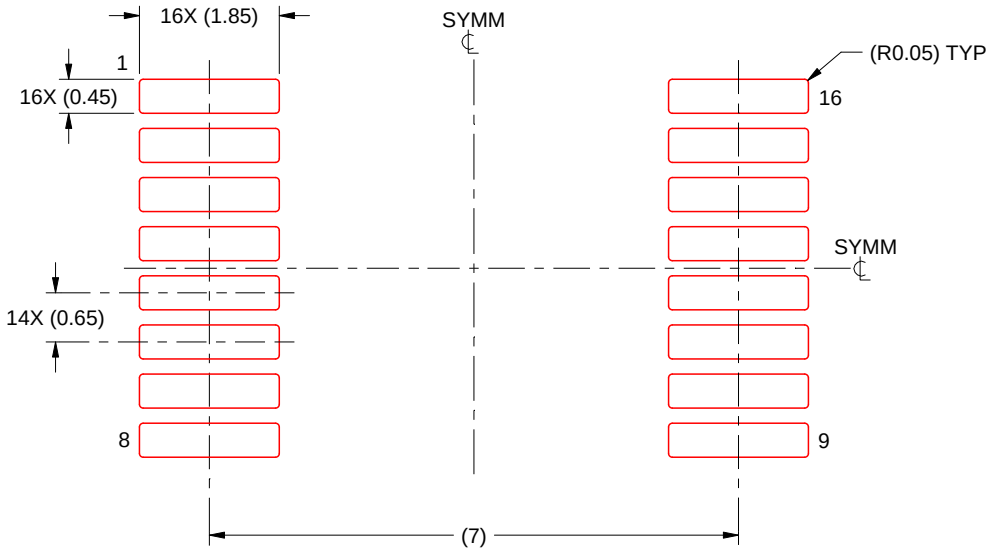

SOLDER PASTE EXAMPLE
BASED ON 0.125 mm THICK STENCIL
SCALE: 10X

4220763/A 05/2022

NOTES: (continued)

7. Laser cutting apertures with trapezoidal walls and rounded corners may offer better paste release. IPC-7525 may have alternate design recommendations.
8. Board assembly site may have different recommendations for stencil design.

重要通知和免责声明

TI“按原样”提供技术和可靠性数据（包括数据表）、设计资源（包括参考设计）、应用或其他设计建议、网络工具、安全信息和其他资源，不保证没有瑕疵且不做出任何明示或暗示的担保，包括但不限于对适销性、与某特定用途的适用性或不侵犯任何第三方知识产权的暗示担保。

这些资源可供使用 TI 产品进行设计的熟练开发人员使用。您将自行承担以下全部责任：(1) 针对您的应用选择合适的 TI 产品，(2) 设计、验证并测试您的应用，(3) 确保您的应用满足相应标准以及任何其他安全、安保法规或其他要求。

这些资源如有变更，恕不另行通知。TI 授权您仅可将这些资源用于研发本资源所述的 TI 产品的相关应用。严禁以其他方式对这些资源进行复制或展示。您无权使用任何其他 TI 知识产权或任何第三方知识产权。对于因您对这些资源的使用而对 TI 及其代表造成的任何索赔、损害、成本、损失和债务，您将全额赔偿，TI 对此概不负责。

TI 提供的产品受 TI 销售条款)、TI 通用质量指南 或 ti.com 上其他适用条款或 TI 产品随附的其他适用条款的约束。TI 提供这些资源并不会扩展或以其他方式更改 TI 针对 TI 产品发布的适用的担保或担保免责声明。 除非德州仪器 (TI) 明确将某产品指定为定制产品或客户特定产品，否则其产品均为按确定价格收入目录的标准通用器件。

TI 反对并拒绝您可能提出的任何其他或不同的条款。

版权所有 © 2026，德州仪器 (TI) 公司

最后更新日期：2025 年 10 月