SN74LV157A 四通道 2 线路至 1 线路数据选择器/多路复用器

1 特性

- 在 2V 至 5.5V V_{CC} 下运行
- 输入电压高达 5.5V
- 电压为 5V 时，t_{pd} 最大值为 7.5ns
- V_{CC}、T_A = 25°C 时，V_{OLP}（输出接地反弹）典型值小于 0.8V
- V_{CC}、T_A = 25°C 时，V_{OHV}（输出 V_{OH} 下冲）典型值大于 2V
- 闩锁性能超过 100mA，符合 JESD 78 II 类规范

2 应用

- 服务器
- 发光二极管 (LED) 显示屏
- 网络交换机
- 电信基础设施
- 电机驱动器
- I/O 扩展器

3 说明

'LV157A 器件是四通道 2 线路至 1 线路数据选择器/多路复用器，旨在于

2V 至 5.5V V_{CC} 下运行。

封装信息(1)

器件型号	封装	封装尺寸（标称值）
SN74LV157A	DB（SSOP，16）	6.2mm × 5.3mm
	DGV（TVSOP，16）	3.6mm × 4.4mm
	DW（SOIC，16）	10.3mm × 7.5mm
	NS（SOP，16）	10.3mm × 5.3mm
	PW（TSSOP，16）	5mm × 4.4mm

(1) 如需了解所有可用封装，请参阅数据表末尾的可订购产品附录。

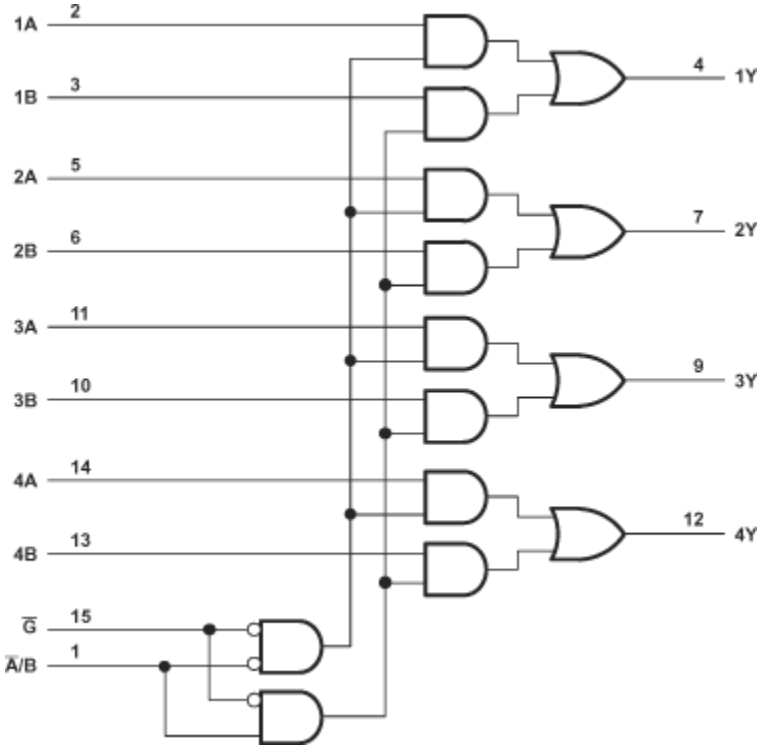

逻辑图（正逻辑）

本文档旨在为方便起见，提供有关 TI 产品中文版本的信息，以确认产品的概要。有关适用的官方英文版本的最新信息，请访问 www.ti.com，其内容始终优先。TI 不保证翻译的准确性和有效性。在实际设计之前，请务必参考最新版本的英文版本。

Table of Contents

1 特性.....1
2 应用.....1
3 说明.....1
4 Revision History.....2
5 Pin Configuration and Functions.....3
6 Specifications.....4
6.1 Absolute Maximum Ratings.....4
6.2 ESD Ratings.....4
6.3 Recommended Operating Conditions.....5
6.4 Thermal Information.....5
6.5 Electrical Characteristics.....5
6.6 Switching Characteristics, V_{CC} = 2.5 V ± 0.2 V.....6
6.7 Switching Characteristics, V_{CC} = 3.3 V ± 0.3 V.....6
6.8 Switching Characteristics, V_{CC} = 5 V ± 0.5 V.....6
6.9 Noise Characteristics.....7
6.10 Operating Characteristics.....7
7 Parameter Measurement Information.....8
8 Detailed Description.....9
8.1 Overview.....9
8.2 Functional Block Diagram.....9
8.3 Device Functional Modes.....9
9 Application and Implementation.....10
9.1 Power Supply Recommendations.....10
9.2 Layout.....10
10 Device and Documentation Support.....11
10.1 Documentation Support.....11
10.2 接收文档更新通知.....11
10.3 支持资源.....11
10.4 静电放电警告.....11
10.5 术语表.....11
11 Mechanical, Packaging, and Orderable Information.....12

4 Revision History

注：以前版本的页码可能与当前版本的页码不同

Changes from Revision F (April 1998) to Revision G (March 2023) **Page**

- *添加了应用、封装信息 表、引脚功能 表、ESD 等级 表、热性能信息 表、器件功能模式、应用和实施 部分、电源相关建议 部分、布局 部分、器件和文档支持 部分以及机械、封装和可订购信息 部分*.....1

Copyright © 2023 Texas Instruments Incorporated

5 Pin Configuration and Functions

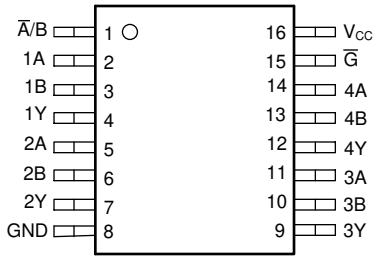

图 5-1. D, DB, DGV, NS, or PW Package (Top View)

表 5-1. Pin Functions

PIN		I/O(1)	DESCRIPTION
NO.	NAME		
1	$\overline{A}$/B	I	Address select
2	1A	I	Channel 1, data input A
3	1B	I	Channel 1, data input B
4	1Y	I	Channel 1, data output
5	2A	O	Channel 2, data input A
6	2B	O	Channel 2, data input B
7	2Y	I	Channel 2, data output
8	GND	—	Ground
9	3Y	I	Channel 3, data output
10	3B	I	Channel 3, data input B
11	3A	I	Channel 3, data input A
12	4Y	I	Channel 4, data output
13	4B	I	Channel 4, data input B
14	4A	I	Channel 4, data input A
15	$\overline{G}$	I	Output strobe, active low
16	V_{CC}	—	Positive supply

6 Specifications

6.1 Absolute Maximum Ratings

over operating free-air temperature range (unless otherwise noted)

			MIN	MAX	UNIT
V_{CC}	Supply voltage		– 0.5	7	V
V_I	Input voltage [1]		– 0.5	7	V
V_O	Output voltage range applied in high or low state[1] [(2)]		– 0.5	V_{CC} + 0.5	V
V_O	Output voltage range applied in power-off state[1]		−0.5	7	V
I_{IK}	Input clamp current	V_I < 0		−20	mA
I_{OK}	Output clamp current	V_O < 0		– 50	mA
I_O	Continuous output current	V_O = 0 to V_{CC}		±25	mA
	Continuous current through V_{CC} or GND			±50	mA
T_{stg}	Storage temperature		– 65	150	°C

(1) This value is limited to 5.5 V maximum.

Stresses beyond those listed under "absolute maximum ratings" may cause permanent damage to the device. These are stress ratings only, and functional operation of the device at these or any other conditions beyond those indicated under "recommended operating conditions" is not implied. Exposure to absolute-maximum-rated conditions for extended periods may affect device reliability.

6.2 ESD Ratings

		VALUE	UNIT
$V_{(ESD)}$ Electrostatic discharge	Human-Body Model (A114-A)[(1)]	±2000	V
	Machine Model (A115-A)	±200	
	Charged-Device Model (C101) [(2)]	±1000	

(1) JEDEC document JEP155 states that 500-V HBM allows safe manufacturing with a standard ESD control process.
(2) JEDEC document JEP157 states that 250-V CDM allows safe manufacturing with a standard ESD control process.

Copyright © 2023 Texas Instruments Incorporated

6.3 Recommended Operating Conditions

			MIN	MAX	UNIT
V_{CC}	Supply voltage		2	5.5	V
V_{IH}	High-level input voltage	V_{CC} = 2 V	1.5		V
		V_{CC} = 2.3 V to 2.7 V	V_{CC} × 0.7		
		V_{CC} = 3 V to 3.6 V	V_{CC} × 0.7		
		V_{CC} = 4.5 V to 5.5 V	V_{CC} × 0.7		
V_{IL}	Low-level input voltage	V_{CC} = 2 V		0.5	V
		V_{CC} = 2.3 V to 2.7 V		V_{CC} × 0.3	
		V_{CC} = 3 V to 3.6 V		V_{CC} × 0.3	
		V_{CC} = 4.5 V to 5.5 V		V_{CC} × 0.3	
V_I	Input voltage		0	5.5	V
V_O	Output voltage		0	V_{CC}	V
I_{OH}	High-level output current	V_{CC} = 2 V		− 50	μA
		V_{CC} = 2.3 V to 2.7 V		− 2	mA
		V_{CC} = 3 V to 3.6 V		6	
		V_{CC} = 4.5 V to 5.5 V		− 12	
I_{OL}	Low-level output current	V_{CC} = 2 V		50	μA
		V_{CC} = 2.3 V to 2.7 V		2	mA
		V_{CC} = 3 V to 3.6 V		6	
		V_{CC} = 4.5 V to 5.5 V		12	
$\Delta t/\Delta v$	Input transition rise or fall rate	V_{CC} = 2.3 V to 2.7 V	0	200	ns/V
		V_{CC} = 3 V to 3.6 V	0	100	
		V_{CC} = 4.5 V to 5.5 V	0	20	
T_A	Operating free-air temperature		− 40	85	°C

6.4 Thermal Information

THERMAL METRIC[1]		SN74LV157A					UNIT
		D	DB	DGV	NS	PW	
		16 PINS	16 PINS	16 PINS	16 PINS	16 PINS	
$R_{\theta JA}$	Junction-to-ambient thermal resistance	73	82	120	64	108	°C/W

(1) For more information about traditional and new thermal metrics, see the *IC Package Thermal Metrics* application report (SPRA953).

6.5 Electrical Characteristics

over recommended operating free-air temperature range (unless otherwise noted)

PARAMETER	TEST CONDITIONS	V_{CC}	MIN	TYP	MAX	UNIT
V_{OH}	I_{OH} = −50 μA	2 V to 5.5 V	V_{CC}−0.1			V
	I_{OH} = −2 mA	2.3 V	2			
	I_{OH} = −6 mA	3 V	2.48			
	I_{OH} = −12 mA	4.5 V	3.8			

over recommended operating free-air temperature range (unless otherwise noted)

PARAMETER	TEST CONDITIONS	V_{CC}	MIN	TYP	MAX	UNIT
V_{OL}	I_{OL} = 50 µA	2 V to 5.5 V			0.1	V
	I_{OL} = 2 mA	2.3 V			0.4	
	I_{OL} = 6 mA	3 V			0.44	
	I_{OL} = 12 mA	4.5 V			0.55	
I_I	V_I = 5.5 V or GND	0 to 5.5 V			± 1	µA
I_{CC}	V_I = V_{CC} or GND, I_O = 0	5.5 V			20	µA
I_{off}	V_I or V_O = 0 to 5.5 V	0			5	µA
C_i	V_I = V_{CC} or GND	3.3 V		1.7		pF

6.6 Switching Characteristics, V_{CC} = 2.5 V ± 0.2 V

over recommended operating free-air temperature range, V_{CC} = 2.5 V ± 0.2 V (unless otherwise noted) (see Load Circuit and Voltage Waveforms)

PARAMETER	FROM (INPUT)	TO (OUTPUT)	LOAD CAPACITANCE	TA = 25°C			SN74LV157A		UNIT
				MIN	TYP	MAX	MIN	MAX	
t_{pd}	A or B	Y	C^L = 15 pF		7.4[1]	15.9[1]	1	19.5	ns
	$\overline{A}$/B	Y			7.9[1]	19.4[1]	1	23.5	
	$\overline{G}$	Y			7.8[1]	19.8[1]	1	24	
t_{pd}	A or B	Y	C_L = 50 pF		9.4	18.8	1	22	ns
	$\overline{A}$	Y			10.8	22.3	1	26	
	$\overline{G}$	Y			9.6	22.7	1	26.5	

1. On products compliant to MIL-PRF-38535, this parameter is not production tested.

6.7 Switching Characteristics, V_{CC} = 3.3 V ± 0.3 V

over recommended operating free-air temperature range, V_{CC} = 3.3 V ± 0.3 V (unless otherwise noted) (see Load Circuit and Voltage Waveforms)

PARAMETER	FROM (INPUT)	TO (OUTPUT)	LOAD CAPACITANCE	TA = 25°C			SN74LV157A		UNIT
				MIN	TYP	MAX	MIN	MAX	
t_{pd}	A or B	Y	C^L = 15 pF		5.2[1]	9.7[1]	1	11.5	ns
	$\overline{A}$/B	Y			5.8[1]	13.2[1]	1	15.5	
	$\overline{G}$	Y			5.5[1]	13.6[1]	1	16	
t_{pd}	A or B	Y	C_L = 50 pF		6.7	13.2	1	15	ns
	$\overline{A}$	Y			7.6	16.7	1	19	
	$\overline{G}$	Y			7	17.1	1	19.5	

1. On products compliant to MIL-PRF-38535, this parameter is not production tested.

6.8 Switching Characteristics, V_{CC} = 5 V ± 0.5 V

over recommended operating free-air temperature range, V_{CC} = 5 V ± 0.5 V (unless otherwise noted) (see Load Circuit and Voltage Waveforms)

PARAMETER	FROM (INPUT)	TO (OUTPUT)	LOAD CAPACITANCE	TA = 25°C			SN74LV157A		UNIT
				MIN	TYP	MAX	MIN	MAX	
t_{pd}	A or B	Y	C^L = 15 pF		3.6[1]	6.4[1]	1	7.5	ns
	$\overline{A}$/B	Y			4.1[1]	8.1[1]	1	9.5	
	$\overline{G}$	Y			3.8[1]	8.6[1]	1	10	

Copyright © 2023 Texas Instruments Incorporated

over recommended operating free-air temperature range, V_{CC} = 5 V ± 0.5 V (unless otherwise noted) (see Load Circuit and Voltage Waveforms)

PARAMETER	FROM (INPUT)	TO (OUTPUT)	LOAD CAPACITANCE	TA = 25°C			SN74LV157A		UNIT
				MIN	TYP	MAX	MIN	MAX	
t_{pd}	A or B	Y	C_L = 50 pF		4.8	8.4	1	9.5	ns
	$\overline{A}$	Y			5.4	10.1	1	11.5	
	$\overline{G}$	Y			5	10.6	1	12	

1. On products compliant to MIL-PRF-38535, this parameter is not production tested.

6.9 Noise Characteristics

V_{CC} = 3.3 V, C_L = 50 pF, T_A = 25°C(1)

PARAMETER		MIN	TYP	MAX	UNIT
$V_{OL(P)}$	Quiet output, maximum dynamic V_{OL}		0.3	0.8	V
$V_{OL(V)}$	Quiet output, minimum dynamic V_{OL}		−0.1	−0.8	V
$V_{OH(V)}$	Quiet output, minimum dynamic V_{OH}		3.2		V
$V_{IH(D)}$	High-level dynamic input voltage	2.31			V
$V_{IL(D)}$	Low-level dynamic input voltage			0.99	V

(1) Characteristics are for surface-mount packages only.

6.10 Operating Characteristics

T_A = 25°C

PARAMETER		TEST CONDITIONS		V_{CC}	TYP	UNIT
C_{pd}	Power dissipation capacitance	C_L = 50 pF	f = 10 MHz	3.3 V	12.1	pF
				5 V	13.1	

7 Parameter Measurement Information

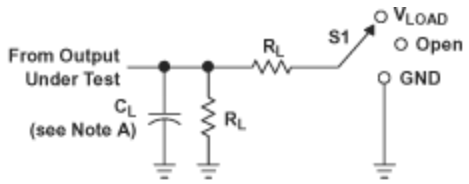

LOAD CIRCUIT

TEST	S1
t_{PLH}/t_{PHL}	Open
t_{PLZ}/t_{PZL}	V_{LOAD}
t_{PHZ}/t_{PZH}	GND

V_{CC}	INPUTS		V_M	V_{LOAD}	C_L	R_L	V_Δ
	V_I	t_r/t_f					
2.7 V	2.7 V	≤2.5 ns	1.5 V	6 V	50 pF	500 Ω	0.3 V
3.3 V ± 0.3 V	2.7 V	≤2.5 ns	1.5 V	6 V	50 pF	500 Ω	0.3 V

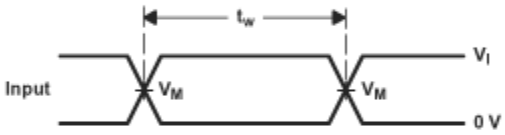

VOLTAGE WAVEFORMS
PULSE DURATION

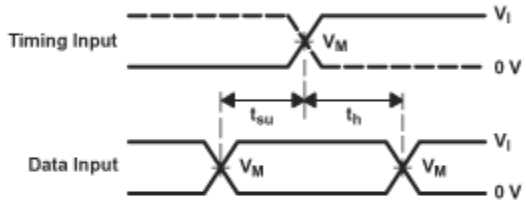

VOLTAGE WAVEFORMS
SETUP AND HOLD TIMES

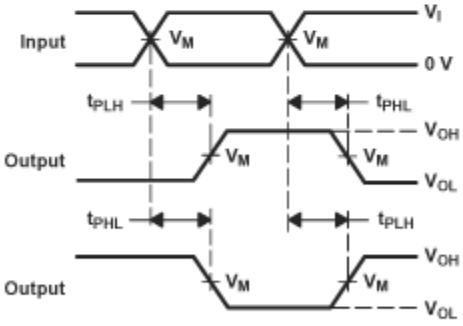

VOLTAGE WAVEFORMS
PROPAGATION DELAY TIMES
INVERTING AND NONINVERTING OUTPUTS

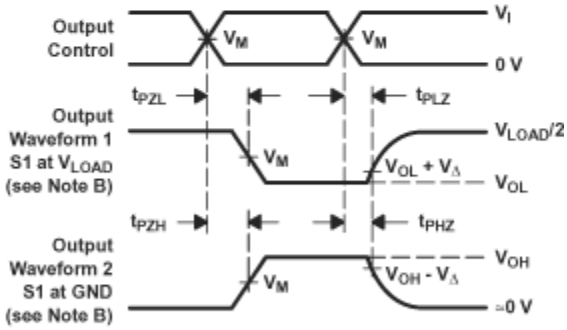

VOLTAGE WAVEFORMS
ENABLE AND DISABLE TIMES
LOW- AND HIGH-LEVEL ENABLING

NOTES:
A. C_L includes probe and jig capacitance.
B. Waveform 1 is for an output with internal conditions such that the output is low, except when disabled by the output control. Waveform 2 is for an output with internal conditions such that the output is high, except when disabled by the output control.
C. All input pulses are supplied by generators having the following characteristics: PRR ≤ 10 MHz, Z_O = 50 Ω.
D. The outputs are measured one at a time, with one transition per measurement.
E. t_{PLZ} and t_{PHZ} are the same as t_{dis}.
F. t_{PZL} and t_{PZH} are the same as t_{en}.
G. t_{PLH} and t_{PHL} are the same as t_{pd}.
H. All parameters and waveforms are not applicable to all devices.

Copyright © 2023 Texas Instruments Incorporated

8 Detailed Description

8.1 Overview

The 'LV157A devices contain inverters and drivers to supply full data selection to the four output gates. A separate strobe ($\overline{G}$) input is provided. A 4-bit word is selected from one of two sources and is routed to the four outputs. The ’ LV157A devices present true data.

8.2 Functional Block Diagram

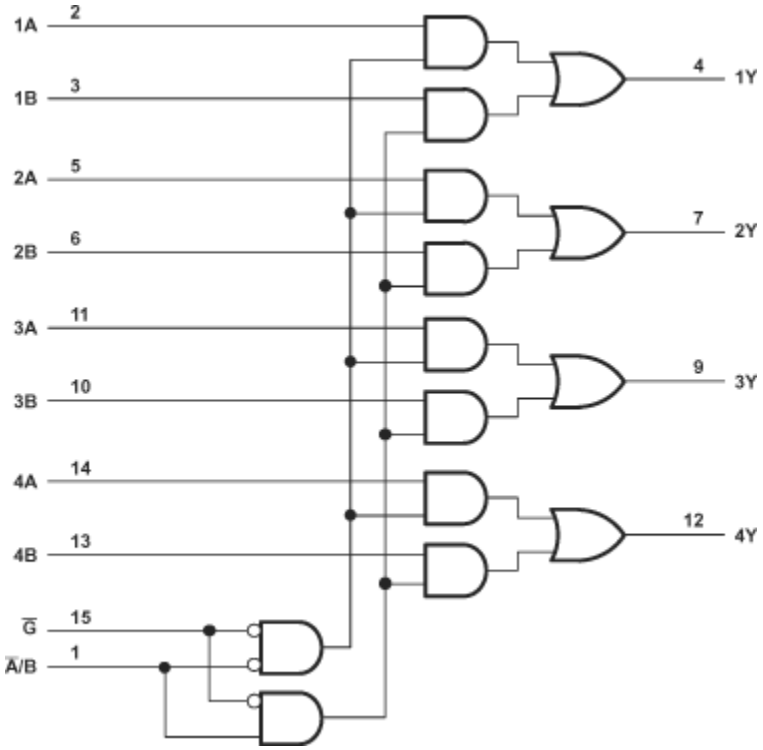

图 8-1. Logic Diagram (Positive Logic)

8.3 Device Functional Modes

表 8-1. Function Table

INPUTS[1]		DATA		OUTPUT Y
$\overline{G}$	SELECT $\overline{A}$/B	A	B	
H	X	X	X	L
L	L	L	X	L
L	L	H	X	H
L	H	X	L	L
L	H	X	H	H

(1) H = High Voltage Level, L = Low Voltage Level, X = Do not Care, Z = High Impedance

9 Application and Implementation

备注

以下应用部分中的信息不属于 TI 器件规格的范围，TI 不担保其准确性和完整性。TI 的客 户应负责确定器件是否适用于其应用。客户应验证并测试其设计，以确保系统功能。

9.1 Power Supply Recommendations

The power supply can be any voltage between the min and max supply voltage rating located in 节 6.3.

Each V_{CC} terminal should have a good bypass capacitor to prevent power disturbance. For devices with a single supply, a 0.1 μF capacitor is recommended. If there are multiple V_{CC} terminals then 0.01 μF or 0.022 μF capacitors are recommended for each power terminal. It is ok to parallel multiple bypass capacitors to reject different frequencies of noise. 0.1 μF and 1.0 μF capacitors are commonly used in parallel. The bypass capacitor should be installed as close to the power terminal as possible for the best results.

9.2 Layout

9.2.1 Layout Guidelines

When using multiple bit logic devices, inputs should not float. In many cases, functions or parts of functions of digital logic devices are unused. Some examples are when only two inputs of a triple-input AND gate are used, or when only 3 of the 4-buffer gates are used. Such unused input pins must not be left unconnected because the undefined voltages at the outside connections result in undefined operational states. All unused inputs of digital logic devices must be connected to a logic high or logic low voltage, as defined by the input voltage specifications, to prevent them from floating. The logic level that must be applied to any particular unused input depends on the function of the device. Generally, the inputs are tied to GND or VCC, whichever makes more sense for the logic function or is more convenient.

9.2.1.1 Layout Example

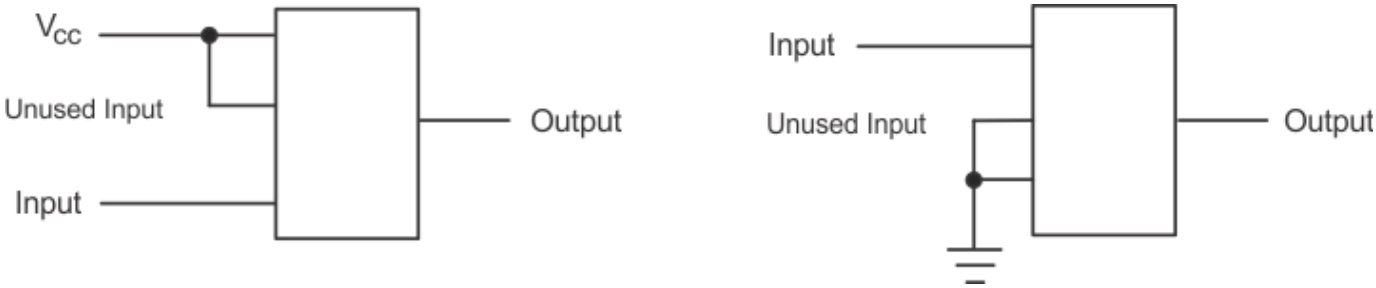

图 9-1. Layout Diagram

Copyright © 2023 Texas Instruments Incorporated

10 Device and Documentation Support

10.1 Documentation Support

10.1.1 Related Documentation

The table below lists quick access links. Categories include technical documents, support and community resources, tools and software, and quick access to sample or buy.

表 10-1. Related Links

PARTS	PRODUCT FOLDER	SAMPLE & BUY	TECHNICAL DOCUMENTS	TOOLS & SOFTWARE	SUPPORT & COMMUNITY
SN74LV157A	Click here	Click here	Click here	Click here	Click here

10.2 接收文档更新通知

要接收文档更新通知，请导航至 ti.com 上的器件产品文件夹。点击*订阅更新* 进行注册，即可每周接收产品信息更改摘要。有关更改的详细信息，请查看任何已修订文档中包含的修订历史记录。

10.3 支持资源

TI E2E™ 支持论坛是工程师的重要参考资料，可直接从专家获得快速、经过验证的解答和设计帮助。搜索现有解答或提出自己的问题可获得所需的快速设计帮助。

链接的内容由各个贡献者“按原样”提供。这些内容并不构成 TI 技术规范，并且不一定反映 TI 的观点；请参阅 TI 的《使用条款》。

Trademarks

TI E2E™ is a trademark of Texas Instruments.
所有商标均为其各自所有者的财产。

10.4 静电放电警告

静电放电 (ESD) 会损坏这个集成电路。德州仪器 (TI) 建议通过适当的预防措施处理所有集成电路。如果不遵守正确的处理和安装程序，可能会损坏集成电路。

ESD 的损坏小至导致微小的性能降级，大至整个器件故障。精密的集成电路可能更容易受到损坏，这是因为非常细微的参数更改都可能会导致器件与其发布的规格不相符。

10.5 术语表

TI 术语表　　本术语表列出并解释了术语、首字母缩略词和定义。

11 Mechanical, Packaging, and Orderable Information

The following pages include mechanical, packaging, and orderable information. This information is the most current data available for the designated devices. This data is subject to change without notice and revision of this document. For browser-based versions of this data sheet, refer to the left-hand navigation.

Copyright © 2023 Texas Instruments Incorporated

PACKAGING INFORMATION

Orderable part number	Status (1)	Material type (2)	Package | Pins	Package qty | Carrier	RoHS (3)	Lead finish/ Ball material (4)	MSL rating/ Peak reflow (5)	Op temp (°C)	Part marking (6)
SN74LV157AD	Obsolete	Production	SOIC (D) | 16	-	-	Call TI	Call TI	-40 to 85	LV157A
SN74LV157ADBR	Active	Production	SSOP (DB) | 16	2000 | LARGE T&R	Yes	NIPDAU	Level-1-260C-UNLIM	-40 to 85	LV157A
SN74LV157ADBR.A	Active	Production	SSOP (DB) | 16	2000 | LARGE T&R	Yes	NIPDAU	Level-1-260C-UNLIM	-40 to 85	LV157A
SN74LV157ADGVR	Active	Production	TVSOP (DGV) | 16	2000 | LARGE T&R	Yes	NIPDAU	Level-1-260C-UNLIM	-40 to 85	LV157A
SN74LV157ADGVR.A	Active	Production	TVSOP (DGV) | 16	2000 | LARGE T&R	Yes	NIPDAU	Level-1-260C-UNLIM	-40 to 85	LV157A
SN74LV157ADR	Active	Production	SOIC (D) | 16	2500 | LARGE T&R	Yes	NIPDAU	Level-1-260C-UNLIM	-40 to 85	LV157A
SN74LV157ADR.A	Active	Production	SOIC (D) | 16	2500 | LARGE T&R	Yes	NIPDAU	Level-1-260C-UNLIM	-40 to 85	LV157A
SN74LV157ANSR	Active	Production	SOP (NS) | 16	2000 | LARGE T&R	Yes	NIPDAU	Level-1-260C-UNLIM	-40 to 85	74LV157A
SN74LV157ANSR.A	Active	Production	SOP (NS) | 16	2000 | LARGE T&R	Yes	NIPDAU	Level-1-260C-UNLIM	-40 to 85	74LV157A
SN74LV157APW	Obsolete	Production	TSSOP (PW) | 16	-	-	Call TI	Call TI	-40 to 85	LV157A
SN74LV157APWR	Active	Production	TSSOP (PW) | 16	2000 | LARGE T&R	Yes	NIPDAU | SN	Level-1-260C-UNLIM	-40 to 85	LV157A
SN74LV157APWR.A	Active	Production	TSSOP (PW) | 16	2000 | LARGE T&R	Yes	NIPDAU	Level-1-260C-UNLIM	-40 to 85	LV157A
SN74LV157APWRG4	Active	Production	TSSOP (PW) | 16	2000 | LARGE T&R	Yes	NIPDAU	Level-1-260C-UNLIM	-40 to 85	LV157A

(1) **Status:** For more details on status, see our product life cycle.

(2) **Material type:** When designated, preproduction parts are prototypes/experimental devices, and are not yet approved or released for full production. Testing and final process, including without limitation quality assurance, reliability performance testing, and/or process qualification, may not yet be complete, and this item is subject to further changes or possible discontinuation. If available for ordering, purchases will be subject to an additional waiver at checkout, and are intended for early internal evaluation purposes only. These items are sold without warranties of any kind.

(3) **RoHS values:** Yes, No, RoHS Exempt. See the TI RoHS Statement for additional information and value definition.

(4) **Lead finish/Ball material:** Parts may have multiple material finish options. Finish options are separated by a vertical ruled line. Lead finish/Ball material values may wrap to two lines if the finish value exceeds the maximum column width.

(5) **MSL rating/Peak reflow:** The moisture sensitivity level ratings and peak solder (reflow) temperatures. In the event that a part has multiple moisture sensitivity ratings, only the lowest level per JEDEC standards is shown. Refer to the shipping label for the actual reflow temperature that will be used to mount the part to the printed circuit board.

(6) **Part marking:** There may be an additional marking, which relates to the logo, the lot trace code information, or the environmental category of the part.

Multiple part markings will be inside parentheses. Only one part marking contained in parentheses and separated by a "~" will appear on a part. If a line is indented then it is a continuation of the previous line and the two combined represent the entire part marking for that device.

Important Information and Disclaimer: The information provided on this page represents TI's knowledge and belief as of the date that it is provided. TI bases its knowledge and belief on information provided by third parties, and makes no representation or warranty as to the accuracy of such information. Efforts are underway to better integrate information from third parties. TI has taken and continues to take reasonable steps to provide representative and accurate information but may not have conducted destructive testing or chemical analysis on incoming materials and chemicals. TI and TI suppliers consider certain information to be proprietary, and thus CAS numbers and other limited information may not be available for release.

In no event shall TI's liability arising out of such information exceed the total purchase price of the TI part(s) at issue in this document sold by TI to Customer on an annual basis.

TAPE AND REEL INFORMATION

REEL DIMENSIONS

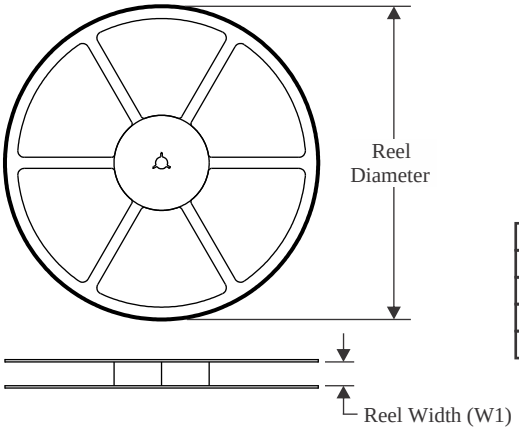

TAPE DIMENSIONS

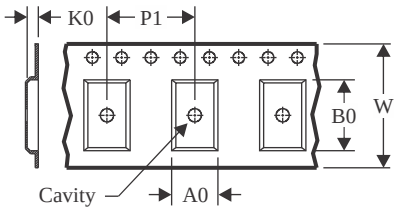

A0	Dimension designed to accommodate the component width
B0	Dimension designed to accommodate the component length
K0	Dimension designed to accommodate the component thickness
W	Overall width of the carrier tape
P1	Pitch between successive cavity centers

QUADRANT ASSIGNMENTS FOR PIN 1 ORIENTATION IN TAPE

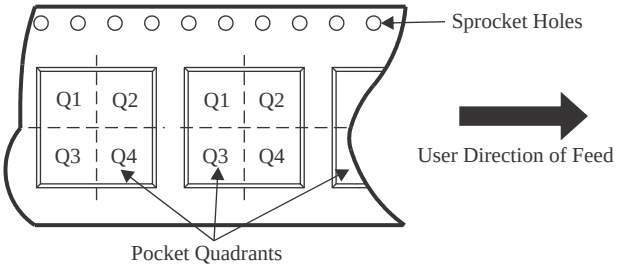

*All dimensions are nominal

Device	Package Type	Package Drawing	Pins	SPQ	Reel Diameter (mm)	Reel Width W1 (mm)	A0 (mm)	B0 (mm)	K0 (mm)	P1 (mm)	W (mm)	Pin1 Quadrant
SN74LV157ADBR	SSOP	DB	16	2000	330.0	16.4	8.35	6.6	2.4	12.0	16.0	Q1
SN74LV157ADGVR	TVSOP	DGV	16	2000	330.0	12.4	6.8	4.0	1.6	8.0	12.0	Q1
SN74LV157ADR	SOIC	D	16	2500	330.0	16.4	6.5	10.3	2.1	8.0	16.0	Q1
SN74LV157ADR	SOIC	D	16	2500	330.0	12.4	3.75	3.75	1.15	8.0	12.0	Q1
SN74LV157ANSR	SOP	NS	16	2000	330.0	16.4	8.1	10.4	2.5	12.0	16.0	Q1
SN74LV157APWR	TSSOP	PW	16	2000	330.0	12.4	6.9	5.6	1.6	8.0	12.0	Q1
SN74LV157APWRG4	TSSOP	PW	16	2000	330.0	12.4	6.9	5.6	1.6	8.0	12.0	Q1

TAPE AND REEL BOX DIMENSIONS

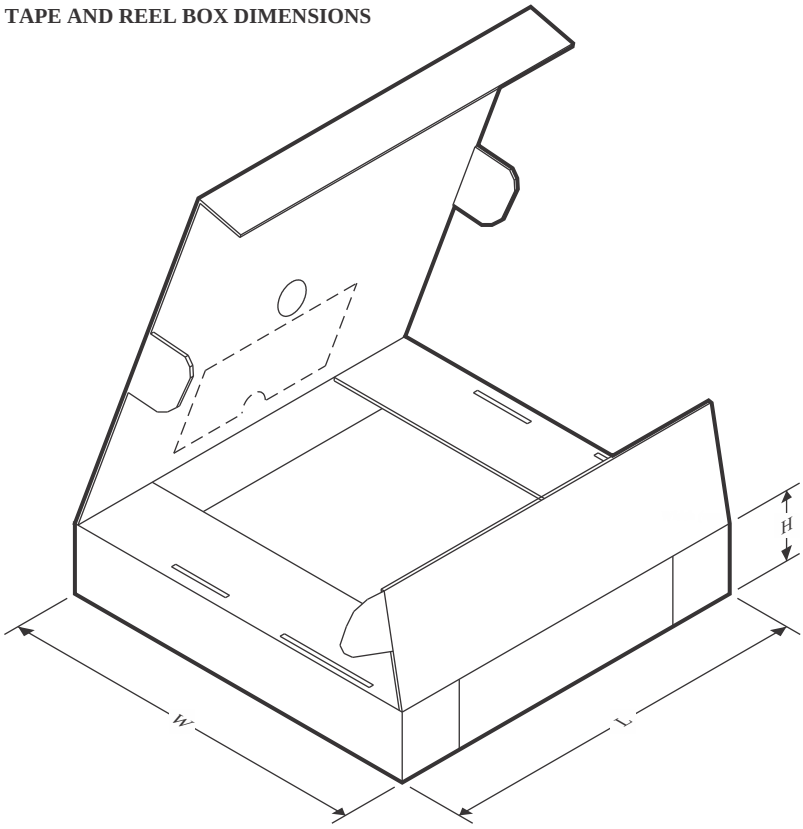

*All dimensions are nominal

Device	Package Type	Package Drawing	Pins	SPQ	Length (mm)	Width (mm)	Height (mm)
SN74LV157ADBR	SSOP	DB	16	2000	353.0	353.0	32.0
SN74LV157ADGVR	TVSOP	DGV	16	2000	353.0	353.0	32.0
SN74LV157ADR	SOIC	D	16	2500	340.5	336.1	32.0
SN74LV157ADR	SOIC	D	16	2500	340.5	336.1	32.0
SN74LV157ANSR	SOP	NS	16	2000	353.0	353.0	32.0
SN74LV157APWR	TSSOP	PW	16	2000	356.0	356.0	35.0
SN74LV157APWRG4	TSSOP	PW	16	2000	356.0	356.0	35.0

D (R–PDSO–G16) PLASTIC SMALL OUTLINE

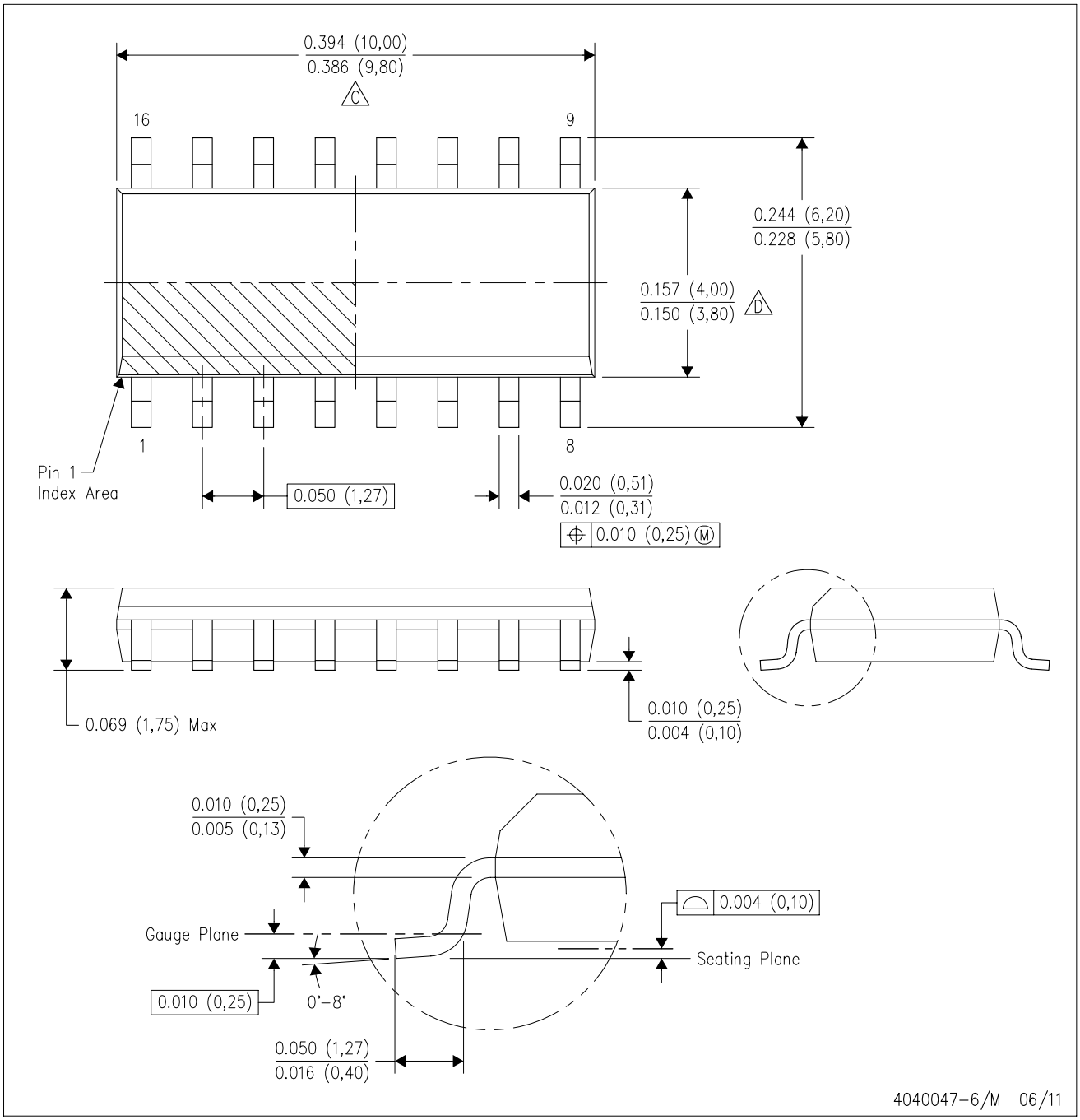

NOTES:
A. All linear dimensions are in inches (millimeters).
B. This drawing is subject to change without notice.
C. Body length does not include mold flash, protrusions, or gate burrs. Mold flash, protrusions, or gate burrs shall not exceed 0.006 (0,15) each side.
D. Body width does not include interlead flash. Interlead flash shall not exceed 0.017 (0,43) each side.
E. Reference JEDEC MS–012 variation AC.

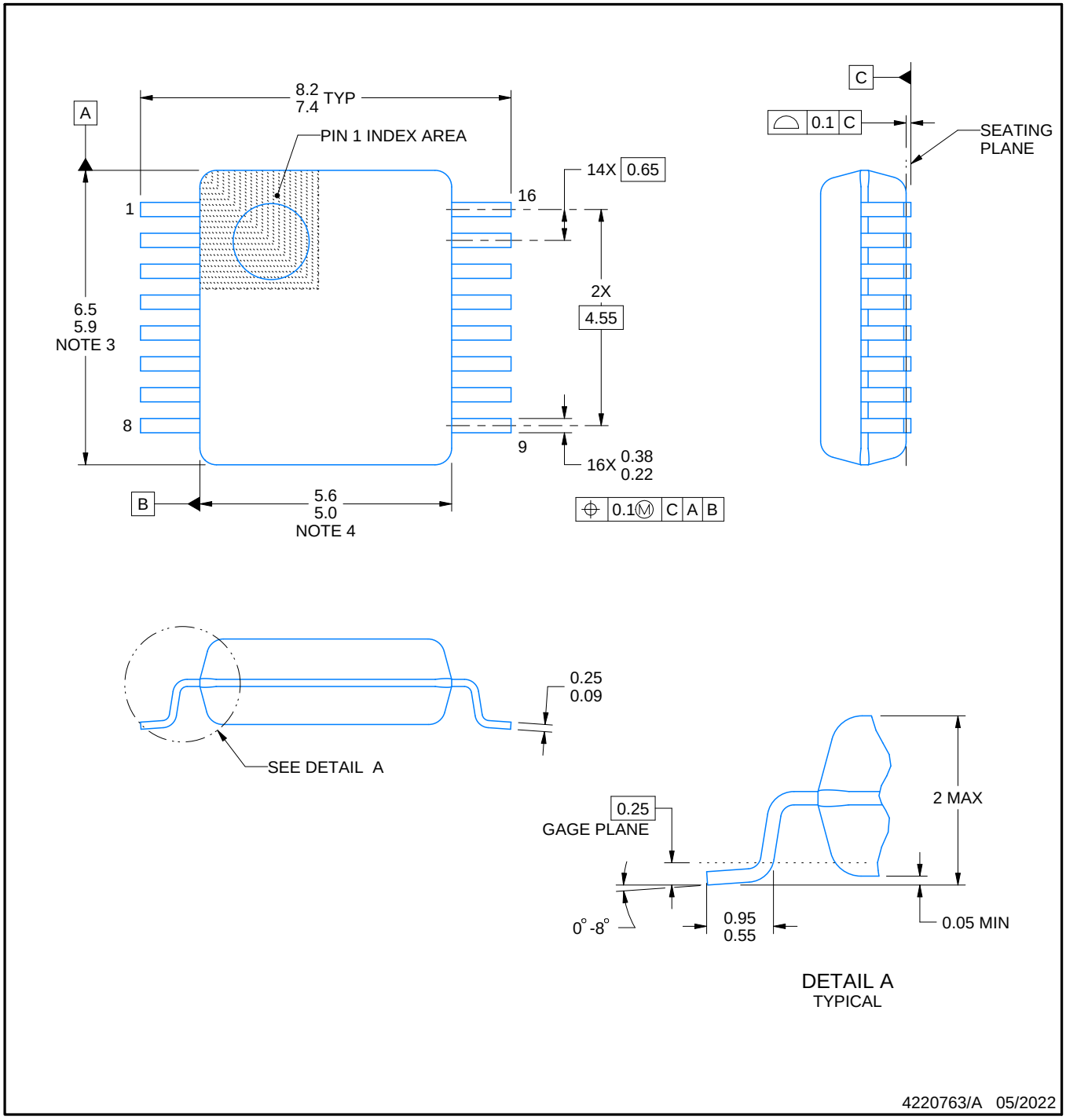

NOTES:

1. All linear dimensions are in millimeters. Any dimensions in parenthesis are for reference only. Dimensioning and tolerancing per ASME Y14.5M.
2. This drawing is subject to change without notice.
3. This dimension does not include mold flash, protrusions, or gate burrs. Mold flash, protrusions, or gate burrs shall not exceed 0.15 mm per side.
4. Reference JEDEC registration MO-150.

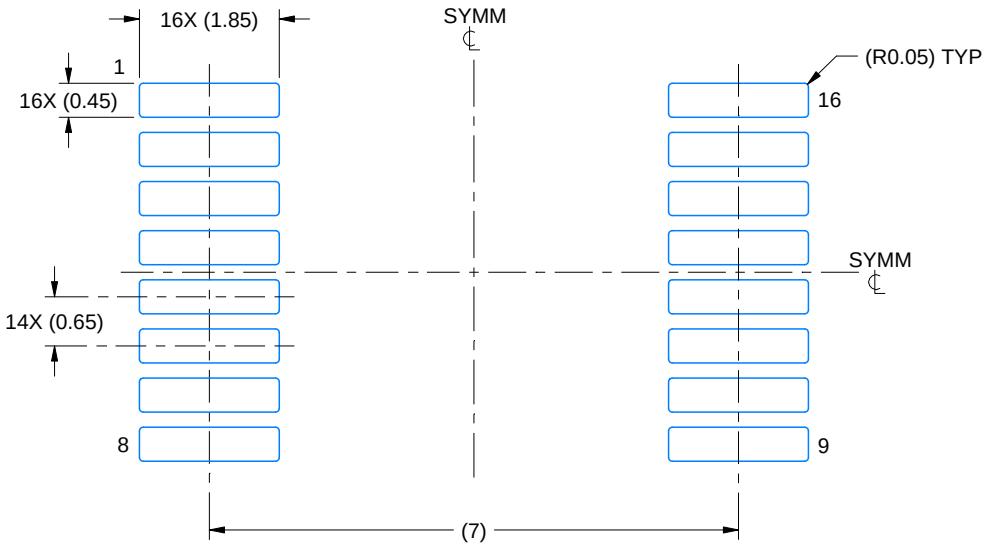

LAND PATTERN EXAMPLE
EXPOSED METAL SHOWN
SCALE: 10X

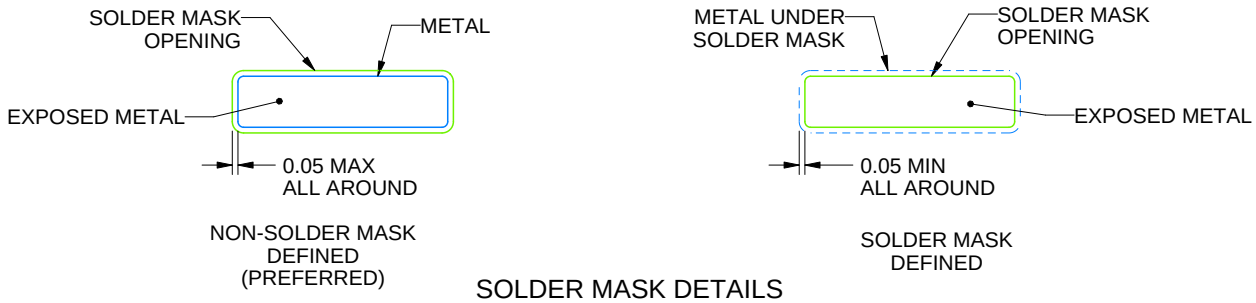

SOLDER MASK DETAILS

4220763/A 05/2022

NOTES: (continued)

5. Publication IPC-7351 may have alternate designs.
6. Solder mask tolerances between and around signal pads can vary based on board fabrication site.

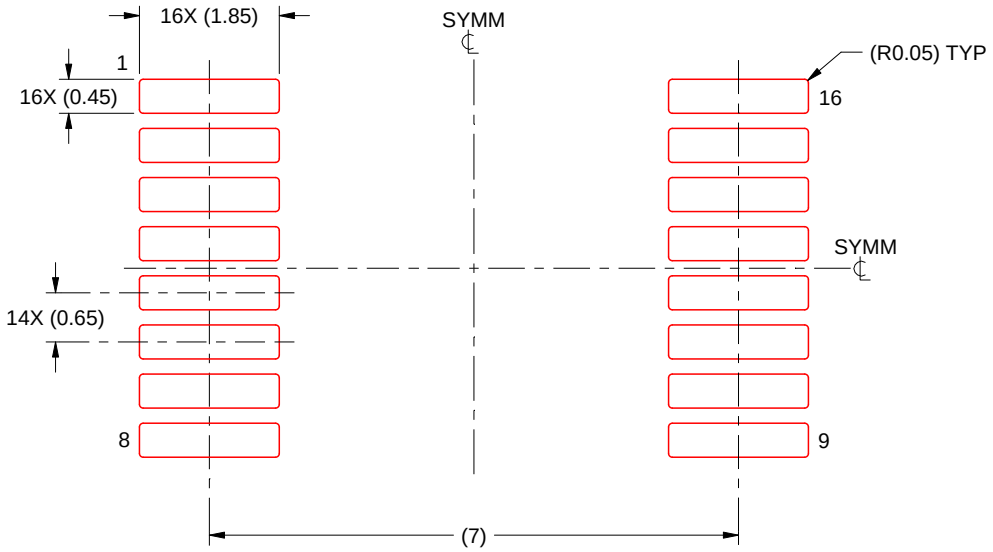

SOLDER PASTE EXAMPLE
BASED ON 0.125 mm THICK STENCIL
SCALE: 10X

4220763/A 05/2022

NOTES: (continued)

7. Laser cutting apertures with trapezoidal walls and rounded corners may offer better paste release. IPC-7525 may have alternate design recommendations.
8. Board assembly site may have different recommendations for stencil design.

DGV (R-PDSO-G)** **PLASTIC SMALL-OUTLINE**

24 PINS SHOWN

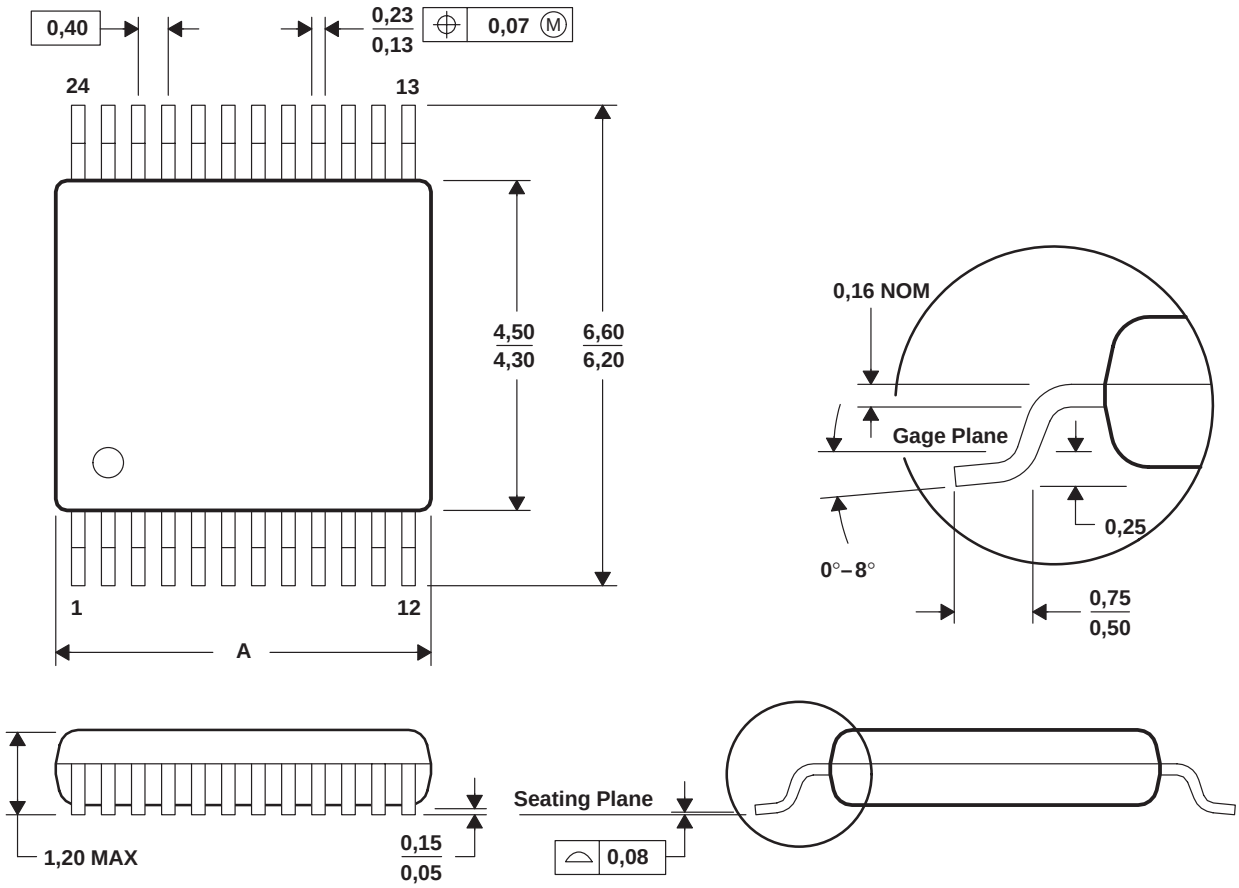

DIM \ PINS **	14	16	20	24	38	48	56
A MAX	3,70	3,70	5,10	5,10	7,90	9,80	11,40
A MIN	3,50	3,50	4,90	4,90	7,70	9,60	11,20

4073251/E 08/00

NOTES: A. All linear dimensions are in millimeters.
B. This drawing is subject to change without notice.
C. Body dimensions do not include mold flash or protrusion, not to exceed 0,15 per side.
D. Falls within JEDEC: 24/48 Pins – MO-153
14/16/20/56 Pins – MO-194

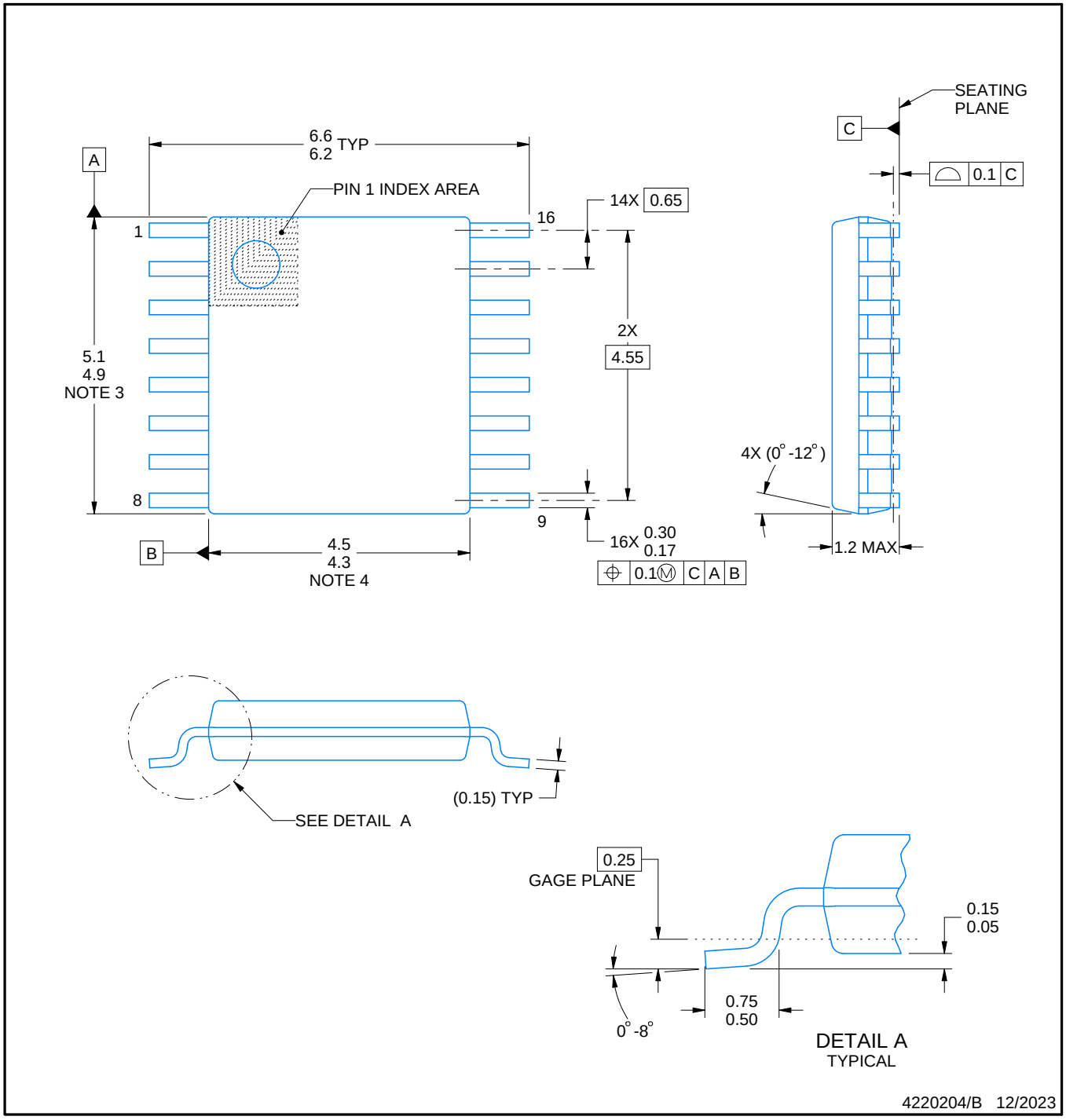

NOTES:

1. All linear dimensions are in millimeters. Any dimensions in parenthesis are for reference only. Dimensioning and tolerancing per ASME Y14.5M.
2. This drawing is subject to change without notice.
3. This dimension does not include mold flash, protrusions, or gate burrs. Mold flash, protrusions, or gate burrs shall not exceed 0.15 mm per side.
4. This dimension does not include interlead flash. Interlead flash shall not exceed 0.25 mm per side.
5. Reference JEDEC registration MO-153.

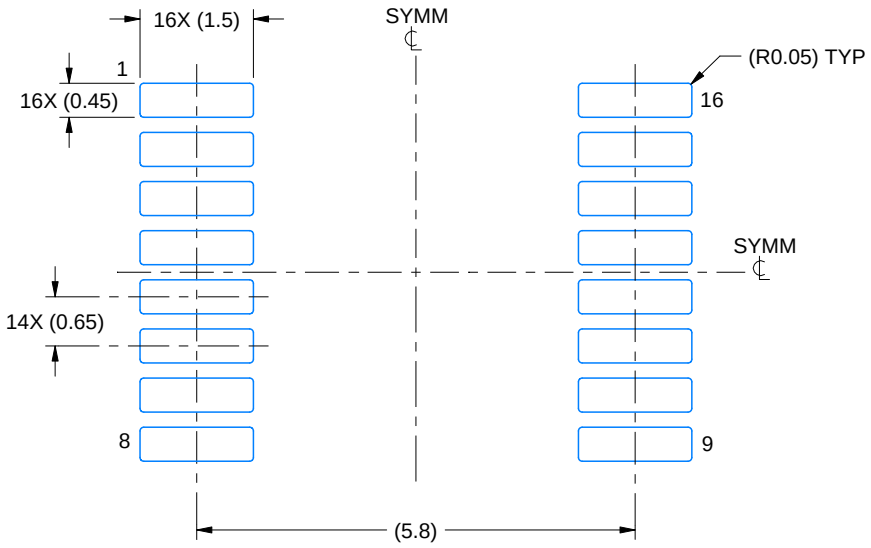

LAND PATTERN EXAMPLE
EXPOSED METAL SHOWN
SCALE: 10X

NON-SOLDER MASK DEFINED (PREFERRED)

SOLDER MASK DEFINED

SOLDER MASK DETAILS

4220204/B 12/2023

NOTES: (continued)

6. Publication IPC-7351 may have alternate designs.
7. Solder mask tolerances between and around signal pads can vary based on board fabrication site.

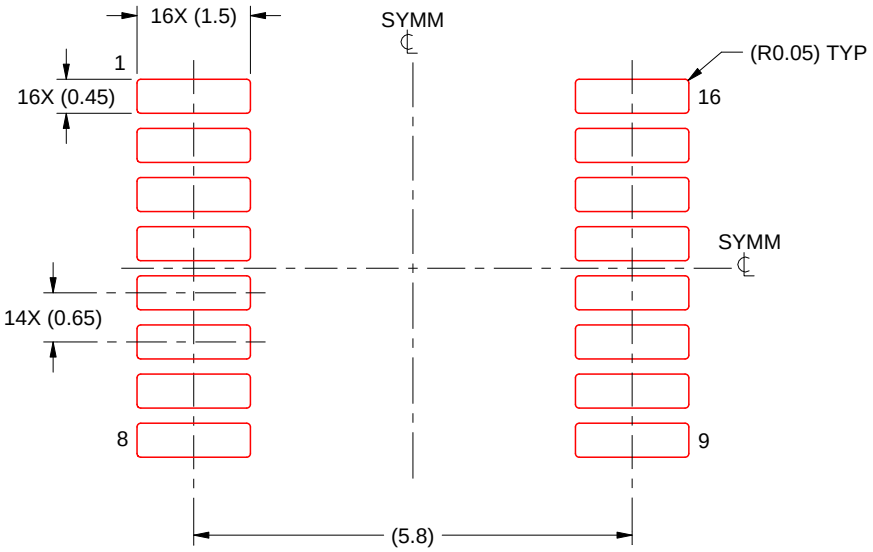

SOLDER PASTE EXAMPLE
BASED ON 0.125 mm THICK STENCIL
SCALE: 10X

4220204/B 12/2023

NOTES: (continued)

8. Laser cutting apertures with trapezoidal walls and rounded corners may offer better paste release. IPC-7525 may have alternate design recommendations.
9. Board assembly site may have different recommendations for stencil design.

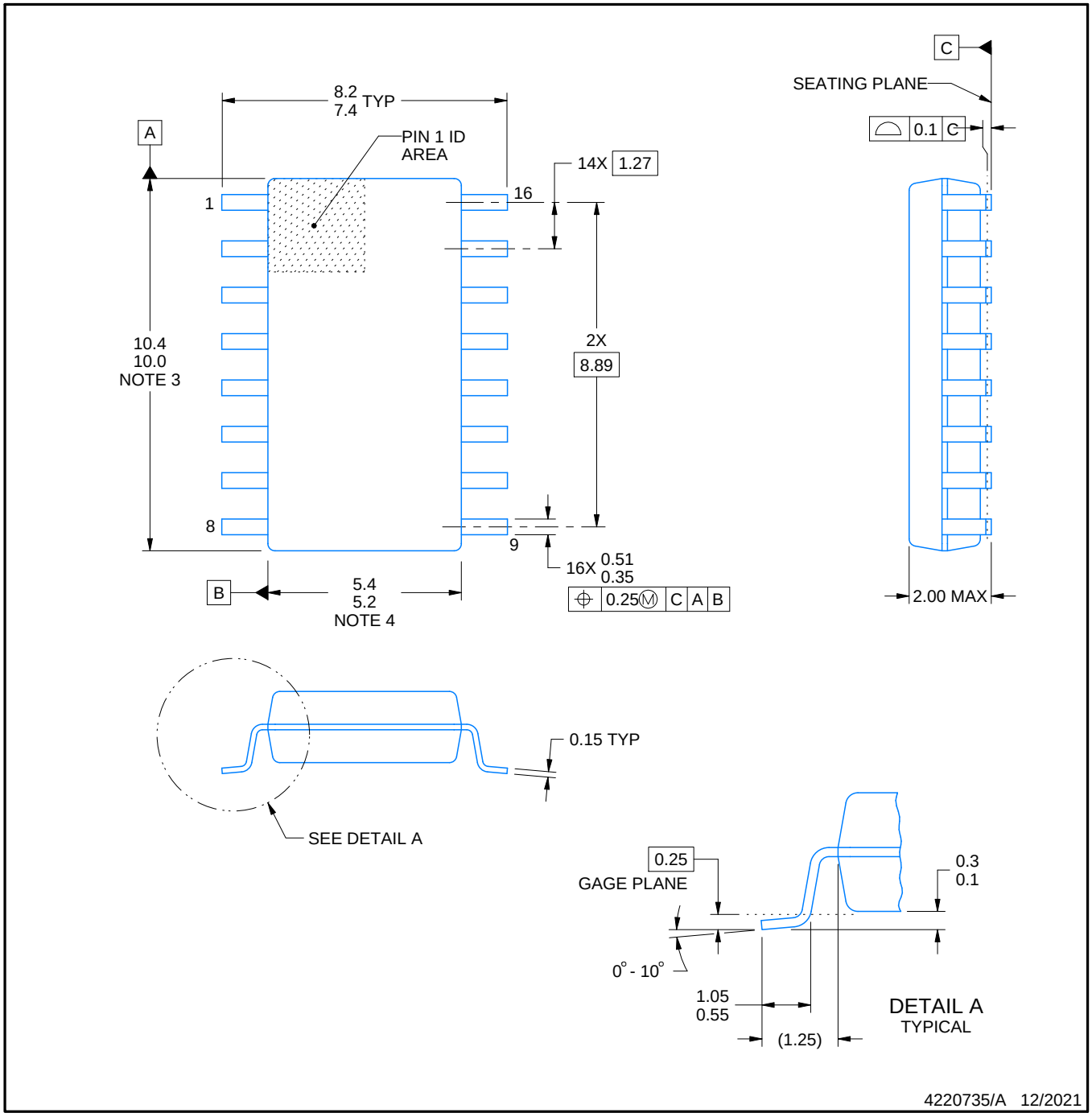

NOTES:

1. All linear dimensions are in millimeters. Dimensions in parenthesis are for reference only. Dimensioning and tolerancing per ASME Y14.5M.
2. This drawing is subject to change without notice.
3. This dimension does not include mold flash, protrusions, or gate burrs. Mold flash, protrusions, or gate burrs shall not exceed 0.15 mm, per side.
4. This dimension does not include interlead flash. Interlead flash shall not exceed 0.25 mm, per side.

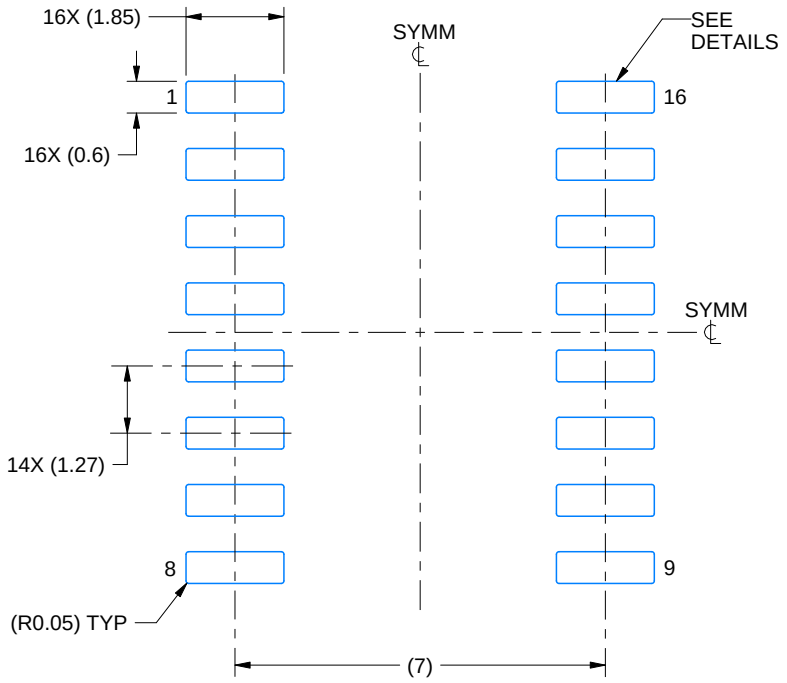

LAND PATTERN EXAMPLE
SCALE:7X

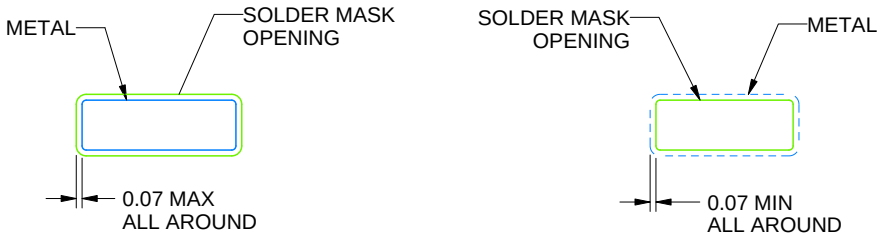

NON SOLDER MASK DEFINED

SOLDER MASK DEFINED

SOLDER MASK DETAILS

4220735/A 12/2021

NOTES: (continued)

5. Publication IPC-7351 may have alternate designs.
6. Solder mask tolerances between and around signal pads can vary based on board fabrication site.

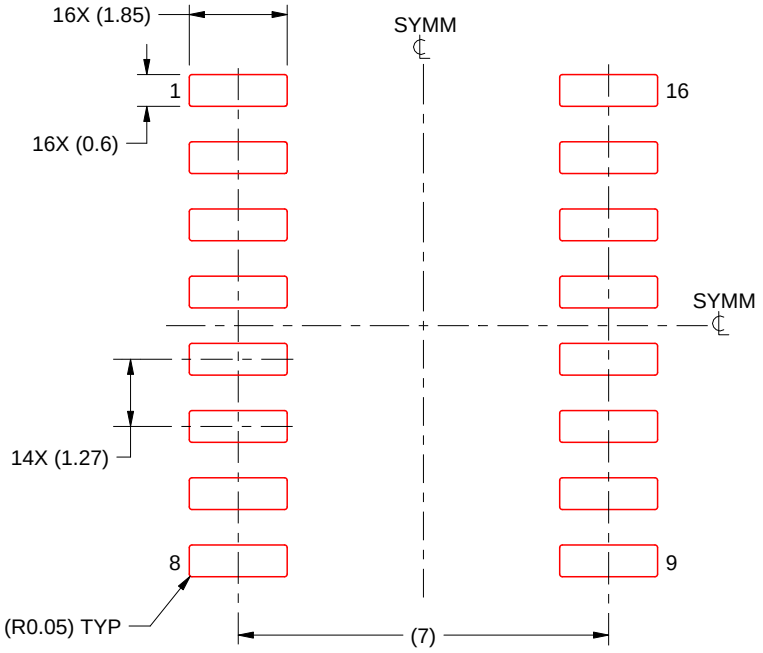

SOLDER PASTE EXAMPLE
BASED ON 0.125 mm THICK STENCIL
SCALE:7X

4220735/A 12/2021

NOTES: (continued)

7. Laser cutting apertures with trapezoidal walls and rounded corners may offer better paste release. IPC-7525 may have alternate design recommendations.
8. Board assembly site may have different recommendations for stencil design.

重要通知和免责声明

TI“按原样”提供技术和可靠性数据（包括数据表）、设计资源（包括参考设计）、应用或其他设计建议、网络工具、安全信息和其他资源，不保证没有瑕疵且不做出任何明示或暗示的担保，包括但不限于对适销性、与某特定用途的适用性或不侵犯任何第三方知识产权的暗示担保。

这些资源可供使用 TI 产品进行设计的熟练开发人员使用。您将自行承担以下全部责任：(1) 针对您的应用选择合适的 TI 产品，(2) 设计、验证并测试您的应用，(3) 确保您的应用满足相应标准以及任何其他安全、安保法规或其他要求。

这些资源如有变更，恕不另行通知。TI 授权您仅可将这些资源用于研发本资源所述的 TI 产品的相关应用。严禁以其他方式对这些资源进行复制或展示。您无权使用任何其他 TI 知识产权或任何第三方知识产权。对于因您对这些资源的使用而对 TI 及其代表造成的任何索赔、损害、成本、损失和债务，您将全额赔偿，TI 对此概不负责。

TI 提供的产品受 TI 销售条款)、TI 通用质量指南 或 ti.com 上其他适用条款或 TI 产品随附的其他适用条款的约束。TI 提供这些资源并不会扩展或以其他方式更改 TI 针对 TI 产品发布的适用的担保或担保免责声明。 除非德州仪器 (TI) 明确将某产品指定为定制产品或客户特定产品，否则其产品均为按确定价格收入目录的标准通用器件。

TI 反对并拒绝您可能提出的任何其他或不同的条款。

版权所有 © 2026，德州仪器 (TI) 公司

最后更新日期：2025 年 10 月