具有可配置电压转换、三态输出和总线保持输入的 SN74AXCH4T245 四位总线收发器

1 特性

- 完全可配置的双电源轨设计可允许各个端口在 0.65V 至 3.6V 的电源电压范围内运行
- 总线保持数据输入消除了对外部上拉或下拉电阻器的需求
- 工作温度范围 -40°C 至 +125°C
- 多向控制引脚，支持同步升降转换
- 无干扰电源定序
- 从 1.8V 转换到 3.3V 时，支持高达 380Mbps 的转换速率
- V_{CC} 隔离特性
- I_{off} 支持局部断电模式运行
- 兼容 AVC 系列电平转换器
- 闩锁性能超过 100mA，符合 JESD 78 II 类规范
- 静电放电 (ESD) 保护性能超过 JESD 22 规范要求
  - 8000V 人体放电模型
  - 1000V 充电器件模型

2 应用

- 企业与通信
- 工业
- 个人电子产品
- 无线基础设施
- 楼宇自动化

3 说明

SN74AXCH4T245 是一款使用两个独立可配置电源轨的四位同相总线收发器。V_{CCA} 和 V_{CCB} 电源电压低至 0.65V 时，该器件可正常工作。A 端口用于跟踪 V_{CCA}，该端口可支持 0.65V 至 3.6V 范围内的任何电源电压。B 端口用于跟踪 V_{CCB}，该端口可支持 0.65V 至 3.6V 范围内的任何电源电压。SN74AXCH4T245 器件与单电源系统兼容。

SN74AXCH4T245 器件旨在实现数据总线间的异步通信，根据方向控制输入（1DIR 和 2DIR）的逻辑电平，将数据从 A 总线传输至 B 总线，或将数据从 B 总线传输至 A 总线。输出使能输入（1$\overline{OE}$ 和 2$\overline{OE}$）可用于禁用输出，从而有效隔离总线。所有控制引脚（xDIR 和 x$\overline{OE}$）以 V_{CCA} 为基准。

有源总线保持电路会将未使用或未驱动的输入保持在有效逻辑状态。不建议在总线保持电路上使用上拉或下拉电阻器。如果 V_{CCA} 或 V_{CCB} 连上电源，则总线保持电路分别在 A 或 B 输入端口上始终保持工作状态，与方向控制或输出使能引脚的状态无关。

为了确保电平转换器 I/O 在加电或断电期间的高阻抗状态，x$\overline{OE}$ 引脚应通过一个上拉电阻器连接至 V_{CCA}。

该器件完全 适用于 使用 I_{off} 电流的局部掉电应用。当器件掉电时，I_{off} 保护电路可确保不从输入/输出或偏置到特定电压的组合 I/O 获取或向其提供多余电流。

V_{CC} 隔离特性可确保当 V_{CCA} 或 V_{CCB} 低于 100mV 时，所有 I/O 端口均禁用其输出并进入高阻抗状态。

无干扰电源定序使电源轨能以任何顺序打开或关断，从而提供强大的电源定序性能。

器件信息(1)

器件型号	封装	封装尺寸（标称值）
SN74AXCH4T245PW	TSSOP (16)	5.00mm x 4.40mm
SN74AXCH4T245RSV	UQFN (16)	2.60mm x 1.80mm

(1) 如需了解所有可用封装，请参阅产品说明书末尾的可订购产品附录。

功能方框图

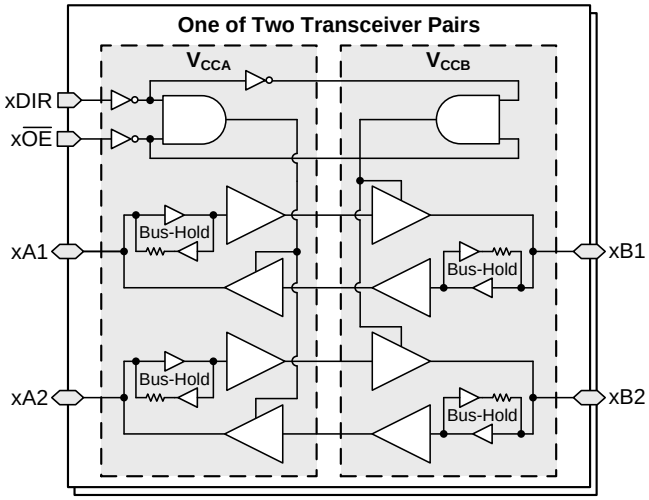

Note: Bus-hold circuits are only present for data inputs, not control inputs

本文档旨在为方便起见，提供有关 TI 产品中文版本的信息，以确认产品的概要。 有关适用的官方英文版本的最新信息，请访问 www.ti.com，其内容始终优先。 TI 不保证翻译的准确性和有效性。 在实际设计之前，请务必参考最新版本的英文版本。

目录

1 特性 ... 1
2 应用 ... 1
3 说明 ... 1
4 修订历史记录 ... 2
5 **Pin Configuration and Functions** ... 3
6 **Specifications** ... 4
6.1 Absolute Maximum Ratings ... 4
6.2 ESD Ratings ... 4
6.3 Recommended Operating Conditions ... 5
6.4 Thermal Information ... 5
6.5 Electrical Characteristics ... 6
6.6 Switching Characteristics, V_{CCA} = 0.7 ± 0.05 V ... 8
6.7 Switching Characteristics, V_{CCA} = 0.8 ± 0.04 V ... 9
6.8 Switching Characteristics, V_{CCA} = 0.9 ± 0.045 V ... 10
6.9 Switching Characteristics, V_{CCA} = 1.2 ± 0.1 V ... 11
6.10 Switching Characteristics, V_{CCA} = 1.5 ± 0.1 V ... 12
6.11 Switching Characteristics, V_{CCA} = 1.8 ± 0.15 V ... 13
6.12 Switching Characteristics, V_{CCA} = 2.5 ± 0.2 V ... 14
6.13 Switching Characteristics, V_{CCA} = 3.3 ± 0.3 V ... 15
6.14 Operating Characteristics: T_A = 25°C ... 16
6.15 Typical Characteristics ... 18
7 **Parameter Measurement Information** ... 19
7.1 Load Circuit and Voltage Waveforms ... 19
8 **Detailed Description** ... 21
8.1 Overview ... 21
8.2 Functional Block Diagram ... 21
8.3 Feature Description ... 21
8.4 Device Functional Modes ... 23
9 **Application and Implementation** ... 24
9.1 Application Information ... 24
9.2 Typical Application ... 24
10 **Power Supply Recommendations** ... 26
11 **Layout** ... 26
11.1 Layout Guidelines ... 26
11.2 Layout Example ... 26
12 器件和文档支持 ... 27
12.1 相关文档 ... 27
12.2 接收文档更新通知 ... 27
12.3 社区资源 ... 27
12.4 商标 ... 27
12.5 静电放电警告 ... 27
12.6 术语表 ... 27
13 机械、封装和可订购信息 ... 28

4 修订历史记录

日期	修订版本	说明
2019 年 3 月	*	初始发行版。

Copyright © 2019, Texas Instruments Incorporated

5 Pin Configuration and Functions

PW Package
16-Pin TSSOP
Top View

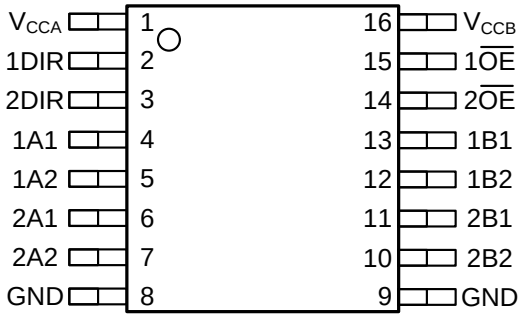

RSV Package
16-Pin UQFN
Transparent Top View

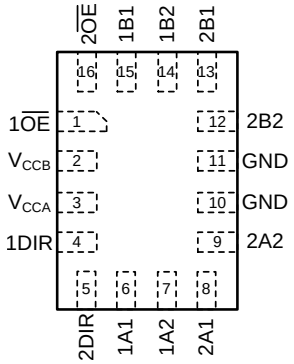

Pin Functions

PIN	NO.		TYPE	DESCRIPTION
NAME	PW	RSV		
1A1	4	6	I/O	Input/output 1A1. Referenced to V_{CCA}.
1A2	5	7	I/O	Input/output 1A2. Referenced to V_{CCA}.
1B1	13	15	I/O	Input/output 1B1. Referenced to V_{CCB}.
1B2	12	14	I/O	Input/output 1B2. Referenced to V_{CCB}.
1DIR	2	4	I	Direction-control input for ‘1’ ports
$1\overline{OE}$	15	1	I	Tri-state output-mode enable. Pull $\overline{OE}$ high to place ‘1’ outputs in tri-state mode. Referenced to V_{CCA}.
2A1	6	8	I/O	Input/output 2A1. Referenced to V_{CCA}.
2A2	7	9	I/O	Input/output 2A2. Referenced to V_{CCA}.
2B1	11	13	I/O	Input/output 2B1. Referenced to V_{CCB}.
2B2	10	12	I/O	Input/output 2B2. Referenced to V_{CCB}.
2DIR	3	5	I	Direction-control input for ‘2’ ports
$2\overline{OE}$	14	16	I	Tri-state output-mode enable. Pull $\overline{OE}$ high to place ‘2’ outputs in tri-state mode. Referenced to V_{CCA}.
GND	8, 9	10, 11	—	Ground
V_{CCA}	1	3	—	A-port power supply voltage. 0.65 V ≤ V_{CCA} ≤ 3.6 V
V_{CCB}	16	2	—	B-port power supply voltage. 0.65 V ≤ V_{CCB} ≤ 3.6 V

Copyright © 2019, Texas Instruments Incorporated

6 Specifications

6.1 Absolute Maximum Ratings

over operating free-air temperature range (unless otherwise noted)[1]

			MIN	MAX	UNITS
V_{CCA}	Supply voltage A		–0.5	4.2	V
V_{CCB}	Supply voltage B		–0.5	4.2	V
V_I	Input Voltage[2]	I/O Ports (A Port)	–0.5	4.2	V
		I/O Ports (B Port)	–0.5	4.2	
		Control Inputs	–0.5	4.2	
V_O	Voltage applied to any output in the high-impedance or power-off state[2]	A Port	–0.5	4.2	V
		B Port	–0.5	4.2	
V_O	Voltage applied to any output in the high or low state[2][3]	A Port	–0.5	V_{CCA} + 0.2	V
		B Port	–0.5	V_{CCB} + 0.2	
I_{IK}	Input clamp current	$V_I < 0$	–50		mA
I_{OK}	Output clamp current	$V_O < 0$	–50		mA
I_O	Continuous output current		–50	50	mA
	Continuous current through V_{CC} or GND		–100	100	mA
T_j	Junction Temperature			150	°C
T_{stg}	Storage temperature		–65	150	°C

(1) Stresses beyond those listed under *Absolute Maximum Ratings* may cause permanent damage to the device. These are stress ratings only, which do not imply functional operation of the device at these or any other conditions beyond those indicated under *Recommended Operating Conditions.* Exposure to absolute-maximum-rated conditions for extended periods may affect device reliability.
(2) The input voltage and output negative-voltage ratings may be exceeded if the input and output current ratings are observed.
(3) The output positive-voltage rating may be exceeded up to 4.2 V maximum if the output current rating is observed.

6.2 ESD Ratings

			VALUE	UNIT
$V_{(ESD)}$	Electrostatic discharge	Human body model (HBM), per ANSI/ESDA/JEDEC JS-001[1]	±8000	V
		Charged device model (CDM), per JEDEC specification JESD22-C101[2]	±1000	

(1) JEDEC document JEP155 states that 500-V HBM allows safe manufacturing with a standard ESD control process.
(2) JEDEC document JEP157 states that 250-V CDM allows safe manufacturing with a standard ESD control process.

Copyright © 2019, Texas Instruments Incorporated

6.3 Recommended Operating Conditions

over operating free-air temperature range (unless otherwise noted)[(1)(2)(3)]

				MIN	MAX	UNIT
V_{CCA}	Supply voltage A			0.65	3.6	V
V_{CCB}	Supply voltage B			0.65	3.6	V
V_{IH}	High-level input voltage	Data Inputs	V_{CCI} = 0.65 V - 0.75 V	V_{CCI} x 0.70		
			V_{CCI} = 0.76 V - 1 V	V_{CCI} x 0.70		
			V_{CCI} = 1.1 V - 1.95 V	V_{CCI} x 0.65		
			V_{CCI} = 2.3 V - 2.7 V	1.6		
			V_{CCI} = 3 V - 3.6 V	V_{CCI} x 0.65		
		Control Inputs(xDIR, x$\overline{OE}$) Referenced to V_{CCA}	V_{CCA} = 0.65 V - 0.75 V	V_{CCA} x 0.70		
			V_{CCA} = 0.76 V - 1 V	V_{CCA} x 0.70		
			V_{CCA} = 1.1 V - 1.95 V	V_{CCA} x 0.65		
			V_{CCA} = 2.3 V - 2.7 V	1.6		
			V_{CCA} = 3 V - 3.6 V	V_{CCA} x 0.65		
V_{IL}	Low-level input voltage	Data Inputs	V_{CCI} = 0.65 V - 0.75 V		V_{CCI} x 0.30	V
			V_{CCI} = 0.76 V - 1 V		V_{CCI} x 0.30	
			V_{CCI} = 1.1 V - 1.95 V		V_{CCI} x 0.35	
			V_{CCI} = 2.3 V - 2.7 V		0.7	
			V_{CCI} = 3 V - 3.6 V		0.8	
		Control Inputs(xDIR, x$\overline{OE}$) Referenced to V_{CCA}	V_{CCA} = 0.65 V - 0.75 V		V_{CCA} x 0.30	
			V_{CCA} = 0.76 V - 1 V		V_{CCA} x 0.30	
			V_{CCA} = 1.1 V - 1.95 V		V_{CCA} x 0.35	
			V_{CCA} = 2.3 V - 2.7 V		0.7	
			V_{CCA} = 3 V - 3.6 V		0.8	
V_I	Input voltage [(3)]			0	3.6	V
V_O	Output voltage	Active State		0	V_{CCO}	V
		Tri-State		0	3.6	
$\Delta t/\Delta v$[(2)]	Input transition rise and fall time				10	ns/V
T_A	Operating free-air temperature			–40	125	°C

(1) V_{CCI} is the V_{CC} associated with the input port.
(2) V_{CCO} is the V_{CC} associated with the output port.
(3) All unused inputs of the device must be held at V_{CC} or GND to ensure proper device operation. Refer to the TI application report, Implications of Slow or Floating CMOS Inputs, SCBA004.

6.4 Thermal Information

THERMAL METRIC[(1)]		SN74AXCH4T245		UNIT
		PW (TSSOP)	RSV (UQFN)	
		16 PINS	16 PINS	
$R_{\theta JA}$	Junction-to-ambient thermal resistance	126.9	130.1	°C/W
$R_{\theta JC(top)}$	Junction-to-case (top) thermal resistance	49.3	70.3	°C/W
$R_{\theta JB}$	Junction-to-board thermal resistance	74.3	57.4	°C/W
ψ_{JT}	Junction-to-top characterization parameter	8.1	4.6	°C/W
ψ_{JB}	Junction-to-board characterization parameter	73.4	55.8	°C/W

(1) For more information about traditional and new thermal metrics, see the Semiconductor and IC Package Thermal Metrics application report.

Copyright © 2019, Texas Instruments Incorporated

6.5 Electrical Characteristics

over operating free-air temperature range (unless otherwise noted) [(1)(2)]

PARAMETER		TEST CONDITIONS		V_{CCA}	V_{CCB}	Operating free-air temperature (T_A)						UNIT
						-40°C to 85°C			-40°C to 125°C			
						MIN	TYP[(3)]	MAX	MIN	TYP[(3)]	MAX	
V_{OH}	High-level output voltage	$V_I = V_{IH}$	I_{OH} = -100 µA	0.7 V - 3.6 V	0.7 V - 3.6 V	V_{CCO} – 0.1			V_{CCO} – 0.1			V
			I_{OH} = -50 µA	0.65 V	0.65 V	0.55			0.55			
			I_{OH} = -200 µA	0.76 V	0.76 V	0.58			0.58			
			I_{OH} = -500 µA	0.85 V	0.85 V	0.65			0.65			
			I_{OH} = -3 mA	1.1 V	1.1 V	0.85			0.85			
			I_{OH} = -6 mA	1.4 V	1.4 V	1.05			1.05			
			I_{OH} = -8 mA	1.65 V	1.65 V	1.2			1.2			
			I_{OH} = -9 mA	2.3 V	2.3 V	1.75			1.75			
			I_{OH} = -12 mA	3 V	3 V	2.3			2.3			
V_{OL}	Low-level output voltage	$V_I = V_{IL}$	I_{OL} = 100 µA	0.7 V - 3.6 V	0.7 V - 3.6 V			0.1			0.1	V
			I_{OL} = 50 µA	0.65 V	0.65 V			0.1			0.1	
			I_{OL} = 200 µA	0.76 V	0.76 V			0.18			0.18	
			I_{OL} = 500 µA	0.85 V	0.85 V			0.2			0.2	
			I_{OL} = 3 mA	1.1 V	1.1 V			0.25			0.25	
			I_{OL} = 6 mA	1.4 V	1.4 V			0.35			0.35	
			I_{OL} = 8 mA	1.65 V	1.65 V			0.45			0.45	
			I_{OL} = 9 mA	2.3 V	2.3 V			0.55			0.55	
			I_{OL} = 12 mA	3 V	3 V			0.7			0.7	
I_{BHL}	Bus-hold low sustaining current (Port A or Port B) [(4)]	V_I = 0.20 V		0.65 V	0.65 V	4			4			µA
		V_I = 0.23 V		0.76 V	0.76 V	8			7			
		V_I = 0.26 V		0.85 V	0.85 V	10			10			
		V_I = 0.39 V		1.1 V	1.1 V	20			20			
		V_I = 0.49 V		1.4 V	1.4 V	40			30			
		V_I = 0.58 V		1.65 V	1.65 V	55			45			
		V_I = 0.7 V		2.3 V	2.3 V	90			80			
		V_I = 0.8 V		3 V	3 V	145			135			
I_{BHH}	Bus-hold high sustaining current (Port A or Port B) [(5)]	V_I = 0.20 V		0.65 V	0.65 V	–4			–4			µA
		V_I = 0.23 V		0.76 V	0.76 V	–8			–7			
		V_I = 0.26 V		0.85 V	0.85 V	–10			–10			
		V_I = 0.39 V		1.1 V	1.1 V	–20			–20			
		V_I = 0.49 V		1.4 V	1.4 V	–40			–30			
		V_I = 0.58 V		1.65 V	1.65 V	–55			–45			
		V_I = 0.7 V		2.3 V	2.3 V	–90			–80			
		V_I = 0.8 V		3 V	3 V	–145			–135			

(1) V_{CCI} is the V_{CC} associated with the input port.
(2) V_{CCO} is the V_{CC} associated with the output port.
(3) All typical data is taken at 25°C.
(4) The bus-hold circuit can sink at least the minimum low sustaining current at V_{IL} max. I_{BHL} should be measured after lowering V_{IN} to GND and then raising it to V_{IL} max.
(5) The bus-hold circuit can source at least the minimum high sustaining current at V_{IH} min. I_{BHH} should be measured after raising V_{IN} to VCC and then lowering it to V_{IH} min.

Copyright © 2019, Texas Instruments Incorporated

Electrical Characteristics (continued)

over operating free-air temperature range (unless otherwise noted) (1)(2)

PARAMETER		TEST CONDITIONS		V_{CCA}	V_{CCB}	Operating free-air temperature (T_A)						UNIT
						-40°C to 85°C			-40°C to 125°C			
						MIN	TYP(3)	MAX	MIN	TYP(3)	MAX	
I_{BHLO}	Bus-hold low overdrive current (Port A or Port B) (6)	V_I = 0 to V_{CC}		0.75 V	0.75 V	40			40			µA
				0.84 V	0.84 V	50			50			
				0.95 V	0.95 V	65			65			
				1.3 V	1.3 V	105			105			
				1.6 V	1.6 V	150			150			
				1.95 V	1.95 V	205			205			
				2.7 V	2.7 V	335			335			
				3.6 V	3.6 V	480			480			
I_{BHHO}	Bus-hold high overdrive current (Port A or Port B) (7)	V_I = 0 to VCC		0.75 V	0.75 V	–40			–40			µA
				0.84 V	0.84 V	–50			–50			
				0.95 V	0.95 V	–65			–65			
				1.3 V	1.3 V	–105			–105			
				1.6 V	1.6 V	–150			–150			
				1.95 V	1.95 V	–205			–205			
				2.7 V	2.7 V	–335			–335			
				3.6 V	3.6 V	–480			–480			
I_I	Input leakage current	Control inputs (xDIR, x$\overline{OE}$): V_I = V_{CCA} or GND		0.65 V- 3.6 V	0.65 V- 3.6 V	–0.5		0.5	–1		1	µA
		Data Inputs (xAx, xBx) V_I = V_{CCI} or GND		0.65 V- 3.6 V	0.65 V- 3.6 V	–4		4	–8		8	µA
I_{off}	Partial power down current	A Port: V_I or V_O = 0 V - 3.6 V		0 V	0 V - 3.6 V	–8		8	–12		12	µA
		B Port: V_I or V_O = 0 V - 3.6 V		0 V - 3.6 V	0 V	–8		8	–12		12	
I_{OZ}	Tri-state output current (8)	A or B Port V_I = V_{CCI} or GND, V_O = V_{CCO} or GND, $\overline{OE}$ = V_{IH}		3.6 V	3.6 V	–4		4	–8		8	µA
I_{CCA}	V_{CCA} supply current	V_I = V_{CCI} or GND	I_O = 0	0.65 V- 3.6 V	0.65 V- 3.6 V			13			26	µA
				0 V	3.6 V	–2			–12			
				3.6 V	0 V			8			16	
I_{CCB}	V_{CCB} supply current	V_I = V_{CCI} or GND	I_O = 0	0.65 V- 3.6 V	0.65 V- 3.6 V			13			26	µA
				0 V	3.6 V			8			16	
				3.6 V	0 V	–2			–12			
I_{CCA} + I_{CCB}	Combined supply current	V_I = V_{CCI} or GND	I_O = 0	0.65 V- 3.6 V	0.65 V- 3.6 V			20			40	µA
C_i	Control Input Capacitance	V_I = 3.3 V or GND		3.3 V	3.3 V		4.5			4.5		pF
C_{io}	Data I/O Capacitance	$\overline{OE}$ = V_{CCA}, V_O = 1.65V DC +1 MHz -16 dBm sine wave		3.3 V	3.3 V		7.4			7.4		pF

(6) An external driver must source at least I_{BHLO} to switch this node from low to high.
(7) An external driver must sink at least I_{BHHO} to switch this node from high to low.
(8) For I/O ports, the parameter I_{OZ} includes the input leakage current.

Copyright © 2019, Texas Instruments Incorporated

6.6 Switching Characteristics, V_{CCA} = 0.7 ± 0.05 V

See Figure 5 and Table 1 for test circuit and loading. See Figure 6, Figure 7, and Figure 8 for measurement waveforms.

PARAMETER		FROM	TO	Test Conditions	B-Port Supply Voltage (V_{CCB})																UNIT
					0.7 ± 0.05 V		0.8 ± 0.04 V		0.9 ± 0.045 V		1.2 ± 0.1 V		1.5 ± 0.1 V		1.8 ± 0.15 V		2.5 ± 0.2 V		3.3 ± 0.3 V		
					MIN	MAX	MIN	MAX	MIN	MAX	MIN	MAX	MIN	MAX	MIN	MAX	MIN	MAX	MIN	MAX	
t_{pd}	Propagation delay	A	B	-40°C to 85°C	0.5	161	0.5	109	0.5	78	0.5	41	0.5	38	0.5	41	0.5	68	0.5	181	ns
				-40°C to 125°C	0.5	161	0.5	109	0.5	78	0.5	41	0.5	38	0.5	41	0.5	68	0.5	181	
		B	A	-40°C to 85°C	0.5	161	0.5	134	0.5	112	0.5	59	0.5	22	0.5	15	0.5	11	0.5	10	
				-40°C to 125°C	0.5	161	0.5	134	0.5	112	0.5	59	0.5	22	0.5	16	0.5	11	0.5	10	
t_{dis}	Disable time	$\overline{OE}$	A	-40°C to 85°C	0.5	159	0.5	159	0.5	159	0.5	159	0.5	159	0.5	159	0.5	159	0.5	159	ns
				-40°C to 125°C	0.5	159	0.5	159	0.5	159	0.5	159	0.5	159	0.5	159	0.5	159	0.5	159	
		$\overline{OE}$	B	-40°C to 85°C	0.5	158	0.5	122	0.5	102	0.5	55	0.5	54	0.5	56	0.5	65	0.5	125	
				-40°C to 125°C	0.5	158	0.5	122	0.5	102	0.5	55	0.5	54	0.5	56	0.5	65	0.5	125	
t_{en}	Enable time	$\overline{OE}$	A	-40°C to 85°C	0.5	243	0.5	243	0.5	243	0.5	243	0.5	243	0.5	243	0.5	243	0.5	243	ns
				-40°C to 125°C	0.5	243	0.5	243	0.5	243	0.5	243	0.5	243	0.5	243	0.5	243	0.5	243	
		$\overline{OE}$	B	-40°C to 85°C	0.5	292	0.5	192	0.5	134	0.5	87	0.5	73	0.5	69	0.5	70	0.5	148	
				-40°C to 125°C	0.5	292	0.5	192	0.5	134	0.5	88	0.5	74	0.5	69	0.5	70	0.5	148	

Copyright © 2019, Texas Instruments Incorporated

6.7 Switching Characteristics, V_{CCA} = 0.8 ± 0.04 V

See Figure 5 and Table 1 for test circuit and loading. See Figure 6, Figure 7, and Figure 8 for measurement waveforms.

PARAMETER		FROM	TO	Test Conditions	B-Port Supply Voltage (V_{CCB})																UNIT
					0.7 ± 0.05 V		0.8 ± 0.04 V		0.9 ± 0.045 V		1.2 ± 0.1 V		1.5 ± 0.1 V		1.8 ± 0.15 V		2.5 ± 0.2 V		3.3 ± 0.3 V		
					MIN	MAX	MIN	MAX	MIN	MAX	MIN	MAX	MIN	MAX	MIN	MAX	MIN	MAX	MIN	MAX	
t_{pd}	Propagation delay	A	B	-40°C to 85°C	0.5	134	0.5	90	0.5	64	0.5	30	0.5	24	0.5	23	0.5	25	0.5	34	ns
				-40°C to 125°C	0.5	134	0.5	90	0.5	64	0.5	30	0.5	24	0.5	23	0.5	25	0.5	34	
		B	A	-40°C to 85°C	0.5	109	0.5	90	0.5	72	0.5	39	0.5	22	0.5	15	0.5	11	0.5	10	
				-40°C to 125°C	0.5	109	0.5	90	0.5	72	0.5	39	0.5	22	0.5	15	0.5	11	0.5	10	
t_{dis}	Disable time	$\overline{OE}$	A	-40°C to 85°C	0.5	110	0.5	110	0.5	110	0.5	110	0.5	110	0.5	110	0.5	110	0.5	110	ns
				-40°C to 125°C	0.5	110	0.5	110	0.5	110	0.5	110	0.5	110	0.5	110	0.5	110	0.5	110	
		$\overline{OE}$	B	-40°C to 85°C	0.5	147	0.5	111	0.5	91	0.5	42	0.5	36	0.5	35	0.5	37	0.5	47	
				-40°C to 125°C	0.5	147	0.5	111	0.5	91	0.5	42	0.5	36	0.5	35	0.5	37	0.5	47	
t_{en}	Enable time	$\overline{OE}$	A	-40°C to 85°C	0.5	143	0.5	143	0.5	143	0.5	143	0.5	143	0.5	143	0.5	143	0.5	143	ns
				-40°C to 125°C	0.5	143	0.5	143	0.5	143	0.5	143	0.5	143	0.5	143	0.5	143	0.5	143	
		$\overline{OE}$	B	-40°C to 85°C	0.5	253	0.5	164	0.5	117	0.5	71	0.5	57	0.5	52	0.5	47	0.5	53	
				-40°C to 125°C	0.5	253	0.5	164	0.5	117	0.5	73	0.5	58	0.5	53	0.5	48	0.5	53	

Copyright © 2019, Texas Instruments Incorporated

6.8 Switching Characteristics, V_{CCA} = 0.9 ± 0.045 V

See Figure 5 and Table 1 for test circuit and loading. See Figure 6, Figure 7, and Figure 8 for measurement waveforms.

PARAMETER		FROM	TO	Test Conditions	B-Port Supply Voltage (V_{CCB})																UNIT
					0.7 ± 0.05 V		0.8 ± 0.04 V		0.9 ± 0.045 V		1.2 ± 0.1 V		1.5 ± 0.1 V		1.8 ± 0.15 V		2.5 ± 0.2 V		3.3 ± 0.3 V		
					MIN	MAX	MIN	MAX	MIN	MAX	MIN	MAX	MIN	MAX	MIN	MAX	MIN	MAX	MIN	MAX	
t_{pd}	Propagation delay	A	B	-40°C to 85°C	0.5	112	0.5	72	0.5	54	0.5	24	0.5	19	0.5	17	0.5	16	0.5	19	ns
				-40°C to 125°C	0.5	112	0.5	72	0.5	54	0.5	24	0.5	19	0.5	17	0.5	16	0.5	19	
		B	A	-40°C to 85°C	0.5	78	0.5	64	0.5	54	0.5	27	0.5	19	0.5	14	0.5	10	0.5	10	
				-40°C to 125°C	0.5	78	0.5	64	0.5	54	0.5	27	0.5	19	0.5	14	0.5	10	0.5	10	
t_{dis}	Disable time	$\overline{OE}$	A	-40°C to 85°C	0.5	81	0.5	81	0.5	81	0.5	81	0.5	81	0.5	81	0.5	81	0.5	81	ns
				-40°C to 125°C	0.5	82	0.5	82	0.5	82	0.5	82	0.5	82	0.5	82	0.5	82	0.5	82	
		$\overline{OE}$	B	-40°C to 85°C	0.5	141	0.5	106	0.5	85	0.5	36	0.5	29	0.5	27	0.5	26	0.5	30	
				-40°C to 125°C	0.5	141	0.5	106	0.5	85	0.5	37	0.5	30	0.5	28	0.5	26	0.5	30	
t_{en}	Enable time	$\overline{OE}$	A	-40°C to 85°C	0.5	84	0.5	84	0.5	84	0.5	84	0.5	84	0.5	84	0.5	84	0.5	84	ns
				-40°C to 125°C	0.5	84	0.5	84	0.5	84	0.5	84	0.5	84	0.5	84	0.5	84	0.5	84	
		$\overline{OE}$	B	-40°C to 85°C	0.5	229	0.5	149	0.5	107	0.5	63	0.5	48	0.5	43	0.5	37	0.5	38	
				-40°C to 125°C	0.5	229	0.5	149	0.5	107	0.5	65	0.5	50	0.5	45	0.5	39	0.5	39	

Copyright © 2019, Texas Instruments Incorporated

6.9 Switching Characteristics, V_{CCA} = 1.2 ± 0.1 V

See Figure 5 and Table 1 for test circuit and loading. See Figure 6, Figure 7, and Figure 8 for measurement waveforms.

PARAMETER		FROM	TO	Test Conditions	B-Port Supply Voltage (V_{CCB})																UNIT
					0.7 ± 0.05 V		0.8 ± 0.04 V		0.9 ± 0.045 V		1.2 ± 0.1 V		1.5 ± 0.1 V		1.8 ± 0.15 V		2.5 ± 0.2 V		3.3 ± 0.3 V		
					MIN	MAX	MIN	MAX	MIN	MAX	MIN	MAX	MIN	MAX	MIN	MAX	MIN	MAX	MIN	MAX	
t_{pd}	Propagation delay	A	B	-40°C to 85°C	0.5	60	0.5	39	0.5	27	0.5	15	0.5	11	0.5	10	0.5	8	0.5	9	ns
				-40°C to 125°C	0.5	60	0.5	39	0.5	27	0.5	15	0.5	12	0.5	10	0.5	9	0.5	9	
		B	A	-40°C to 85°C	0.5	41	0.5	30	0.5	24	0.5	15	0.5	11	0.5	9	0.5	7	0.5	7	
				-40°C to 125°C	0.5	41	0.5	30	0.5	24	0.5	15	0.5	11	0.5	9	0.5	7	0.5	7	
t_{dis}	Disable time	$\overline{OE}$	A	-40°C to 85°C	0.5	28	0.5	28	0.5	28	0.5	28	0.5	28	0.5	28	0.5	28	0.5	28	ns
				-40°C to 125°C	0.5	30	0.5	30	0.5	30	0.5	30	0.5	30	0.5	30	0.5	30	0.5	30	
		$\overline{OE}$	B	-40°C to 85°C	0.5	133	0.5	100	0.5	79	0.5	29	0.5	22	0.5	20	0.5	17	0.5	17	
				-40°C to 125°C	0.5	134	0.5	100	0.5	80	0.5	31	0.5	23	0.5	21	0.5	18	0.5	18	
t_{en}	Enable time	$\overline{OE}$	A	-40°C to 85°C	0.5	37	0.5	37	0.5	37	0.5	37	0.5	37	0.5	37	0.5	37	0.5	37	ns
				-40°C to 125°C	0.5	39	0.5	39	0.5	39	0.5	39	0.5	39	0.5	39	0.5	39	0.5	39	
		$\overline{OE}$	B	-40°C to 85°C	0.5	168	0.5	109	0.5	77	0.5	51	0.5	37	0.5	31	0.5	25	0.5	23	
				-40°C to 125°C	0.5	168	0.5	109	0.5	78	0.5	53	0.5	39	0.5	34	0.5	27	0.5	24	

Copyright © 2019, Texas Instruments Incorporated

6.10 Switching Characteristics, V_{CCA} = 1.5 ± 0.1 V

See Figure 5 and Table 1 for test circuit and loading. See Figure 6, Figure 7, and Figure 8 for measurement waveforms.

PARAMETER		FROM	TO	Test Conditions	B-Port Supply Voltage (V_{CCB})																UNIT
					0.7 ± 0.05 V		0.8 ± 0.04 V		0.9 ± 0.045 V		1.2 ± 0.1 V		1.5 ± 0.1 V		1.8 ± 0.15 V		2.5 ± 0.2 V		3.3 ± 0.3 V		
					MIN	MAX	MIN	MAX	MIN	MAX	MIN	MAX	MIN	MAX	MIN	MAX	MIN	MAX	MIN	MAX	
t_{pd}	Propagation delay	A	B	-40°C to 85°C	0.5	22	0.5	22	0.5	19	0.5	11	0.5	9	0.5	8	0.5	7	0.5	6	ns
				-40°C to 125°C	0.5	22	0.5	22	0.5	19	0.5	11	0.5	9	0.5	8	0.5	7	0.5	6	
		B	A	-40°C to 85°C	0.5	38	0.5	24	0.5	19	0.5	11	0.5	9	0.5	8	0.5	5	0.5	5	
				-40°C to 125°C	0.5	38	0.5	24	0.5	19	0.5	11	0.5	9	0.5	8	0.5	6	0.5	5	
t_{dis}	Disable time	$\overline{OE}$	A	-40°C to 85°C	0.5	19	0.5	19	0.5	19	0.5	19	0.5	19	0.5	19	0.5	19	0.5	19	ns
				-40°C to 125°C	0.5	21	0.5	21	0.5	21	0.5	21	0.5	21	0.5	21	0.5	21	0.5	21	
		$\overline{OE}$	B	-40°C to 85°C	0.5	131	0.5	98	0.5	78	0.5	27	0.5	20	0.5	18	0.5	14	0.5	14	
				-40°C to 125°C	0.5	132	0.5	98	0.5	78	0.5	29	0.5	21	0.5	19	0.5	15	0.5	15	
t_{en}	Enable time	$\overline{OE}$	A	-40°C to 85°C	0.5	23	0.5	23	0.5	23	0.5	23	0.5	23	0.5	23	0.5	23	0.5	23	ns
				-40°C to 125°C	0.5	25	0.5	25	0.5	25	0.5	25	0.5	25	0.5	25	0.5	25	0.5	25	
		$\overline{OE}$	B	-40°C to 85°C	0.5	109	0.5	84	0.5	67	0.5	43	0.5	31	0.5	26	0.5	20	0.5	18	
				-40°C to 125°C	0.5	109	0.5	84	0.5	68	0.5	45	0.5	34	0.5	29	0.5	22	0.5	19	

Copyright © 2019, Texas Instruments Incorporated

6.11 Switching Characteristics, V_{CCA} = 1.8 ± 0.15 V

See Figure 5 and Table 1 for test circuit and loading. See Figure 6, Figure 7, and Figure 8 for measurement waveforms.

PARAMETER		FROM	TO	Test Conditions	B-Port Supply Voltage (V_{CCB})																UNIT
					0.7 ± 0.05 V		0.8 ± 0.04 V		0.9 ± 0.045 V		1.2 ± 0.1 V		1.5 ± 0.1 V		1.8 ± 0.15 V		2.5 ± 0.2 V		3.3 ± 0.3 V		
					MIN	MAX	MIN	MAX	MIN	MAX	MIN	MAX	MIN	MAX	MIN	MAX	MIN	MAX	MIN	MAX	
t_{pd}	Propagation delay	A	B	-40°C to 85°C	0.5	15	0.5	15	0.5	14	0.5	9	0.5	8	0.5	7	0.5	6	0.5	6	ns
				-40°C to 125°C	0.5	16	0.5	15	0.5	14	0.5	9	0.5	8	0.5	7	0.5	6	0.5	6	
		B	A	-40°C to 85°C	0.5	41	0.5	23	0.5	17	0.5	10	0.5	8	0.5	7	0.5	5	0.5	4	
				-40°C to 125°C	0.5	41	0.5	23	0.5	17	0.5	10	0.5	8	0.5	7	0.5	5	0.5	4	
t_{dis}	Disable time	$\overline{OE}$	A	-40°C to 85°C	0.5	17	0.5	17	0.5	17	0.5	17	0.5	17	0.5	17	0.5	17	0.5	17	ns
				-40°C to 125°C	0.5	18	0.5	18	0.5	18	0.5	18	0.5	18	0.5	18	0.5	18	0.5	18	
		$\overline{OE}$	B	-40°C to 85°C	0.5	129	0.5	98	0.5	77	0.5	27	0.5	19	0.5	17	0.5	13	0.5	13	
				-40°C to 125°C	0.5	131	0.5	98	0.5	77	0.5	28	0.5	21	0.5	18	0.5	14	0.5	14	
t_{en}	Enable time	$\overline{OE}$	A	-40°C to 85°C	0.5	17	0.5	17	0.5	17	0.5	17	0.5	17	0.5	17	0.5	17	0.5	17	ns
				-40°C to 125°C	0.5	19	0.5	19	0.5	19	0.5	19	0.5	19	0.5	19	0.5	19	0.5	19	
		$\overline{OE}$	B	-40°C to 85°C	0.5	102	0.5	73	0.5	60	0.5	38	0.5	28	0.5	24	0.5	19	0.5	16	
				-40°C to 125°C	0.5	102	0.5	75	0.5	62	0.5	41	0.5	31	0.5	26	0.5	20	0.5	18	

Copyright © 2019, Texas Instruments Incorporated

6.12 Switching Characteristics, V_{CCA} = 2.5 ± 0.2 V

See Figure 5 and Table 1 for test circuit and loading. See Figure 6, Figure 7, and Figure 8 for measurement waveforms.

PARAMETER		FROM	TO	Test Conditions	B-Port Supply Voltage (V_{CCB})																UNIT
					0.7 ± 0.05 V		0.8 ± 0.04 V		0.9 ± 0.045 V		1.2 ± 0.1 V		1.5 ± 0.1 V		1.8 ± 0.15 V		2.5 ± 0.2 V		3.3 ± 0.3 V		
					MIN	MAX	MIN	MAX	MIN	MAX	MIN	MAX	MIN	MAX	MIN	MAX	MIN	MAX	MIN	MAX	
t_{pd}	Propagation delay	A	B	-40°C to 85°C	0.5	11	0.5	11	0.5	10	0.5	7	0.5	6	0.5	5	0.5	5	0.5	5	ns
				-40°C to 125°C	0.5	11	0.5	11	0.5	10	0.5	7	0.5	6	0.5	5	0.5	5	0.5	5	
		B	A	-40°C to 85°C	0.5	68	0.5	25	0.5	17	0.5	8	0.5	7	0.5	6	0.5	5	0.5	4	
				-40°C to 125°C	0.5	68	0.5	25	0.5	17	0.5	9	0.5	7	0.5	6	0.5	5	0.5	4	
t_{dis}	Disable time	$\overline{OE}$	A	-40°C to 85°C	0.5	12	0.5	12	0.5	12	0.5	12	0.5	12	0.5	12	0.5	12	0.5	12	ns
				-40°C to 125°C	0.5	13	0.5	13	0.5	13	0.5	13	0.5	13	0.5	13	0.5	13	0.5	13	
		$\overline{OE}$	B	-40°C to 85°C	0.5	128	0.5	96	0.5	76	0.5	26	0.5	18	0.5	16	0.5	12	0.5	12	
				-40°C to 125°C	0.5	129	0.5	96	0.5	77	0.5	27	0.5	20	0.5	17	0.5	13	0.5	13	
t_{en}	Enable time	$\overline{OE}$	A	-40°C to 85°C	0.5	12	0.5	12	0.5	12	0.5	12	0.5	12	0.5	12	0.5	12	0.5	12	ns
				-40°C to 125°C	0.5	13	0.5	13	0.5	13	0.5	13	0.5	13	0.5	13	0.5	13	0.5	13	
		$\overline{OE}$	B	-40°C to 85°C	0.5	120	0.5	69	0.5	54	0.5	33	0.5	24	0.5	20	0.5	16	0.5	14	
				-40°C to 125°C	0.5	120	0.5	70	0.5	56	0.5	36	0.5	26	0.5	22	0.5	18	0.5	15	

Copyright © 2019, Texas Instruments Incorporated

6.13 Switching Characteristics, V_{CCA} = 3.3 ± 0.3 V

See Figure 5 and Table 1 for test circuit and loading. See Figure 6, Figure 7, and Figure 8 for measurement waveforms.

PARAMETER		FROM	TO	Test Condtions	B-Port Supply Voltage (V_{CCB})																UNIT
					0.7 ± 0.05 V		0.8 ± 0.04 V		0.9 ± 0.045 V		1.2 ± 0.1 V		1.5 ± 0.1 V		1.8 ± 0.15 V		2.5 ± 0.2 V		3.3 ± 0.3 V		
					MIN	MAX	MIN	MAX	MIN	MAX	MIN	MAX	MIN	MAX	MIN	MAX	MIN	MAX	MIN	MAX	
t_{pd}	Propagation delay	A	B	-40°C to 85°C	0.5	10	0.5	10	0.5	10	0.5	7	0.5	5	0.5	5	0.5	5	0.5	4	ns
				-40°C to 125°C	0.5	10	0.5	10	0.5	10	0.5	7	0.5	5	0.5	5	0.5	5	0.5	4	
		B	A	-40°C to 85°C	0.5	182	0.5	34	0.5	19	0.5	9	0.5	6	0.5	5	0.5	5	0.5	4	
				-40°C to 125°C	0.5	182	0.5	34	0.5	19	0.5	9	0.5	6	0.5	6	0.5	5	0.5	4	
t_{dis}	Disable time	$\overline{OE}$	A	-40°C to 85°C	0.5	11	0.5	11	0.5	11	0.5	11	0.5	11	0.5	11	0.5	11	0.5	11	ns
				-40°C to 125°C	0.5	12	0.5	12	0.5	12	0.5	12	0.5	12	0.5	12	0.5	12	0.5	12	
		$\overline{OE}$	B	-40°C to 85°C	0.5	142	0.5	96	0.5	76	0.5	26	0.5	18	0.5	16	0.5	12	0.5	11	
				-40°C to 125°C	0.5	142	0.5	97	0.5	77	0.5	27	0.5	19	0.5	17	0.5	13	0.5	12	
t_{en}	Enable time	$\overline{OE}$	A	-40°C to 85°C	0.5	9	0.5	9	0.5	9	0.5	9	0.5	9	0.5	9	0.5	9	0.5	9	ns
				-40°C to 125°C	0.5	11	0.5	11	0.5	11	0.5	11	0.5	11	0.5	11	0.5	11	0.5	11	
		$\overline{OE}$	B	-40°C to 85°C	0.5	194	0.5	82	0.5	57	0.5	33	0.5	22	0.5	18	0.5	14	0.5	13	
				-40°C to 125°C	0.5	194	0.5	82	0.5	58	0.5	35	0.5	24	0.5	20	0.5	16	0.5	14	

Copyright © 2019, Texas Instruments Incorporated

6.14 Operating Characteristics: T_A = 25°C

PARAMETER		TEST CONDITIONS	V_{CCA}	V_{CCB}	MIN	TYP	MAX	UNIT
C_{pdA}	Power Dissipation Capacitance per transceiver (A to B: outputs enabled)	CL = 0, RL = Open f = 1 MHz, tr = tf = 1 ns	0.7 V	0.7 V		2.2		pF
			0.8 V	0.8 V		2.3		
			0.9 V	0.9 V		2.3		
			1.2 V	1.2 V		2.3		
			1.5 V	1.5 V		2.2		
			1.8 V	1.8 V		2.2		
			2.5 V	2.5 V		2.5		
			3.3 V	3.3 V		2.6		
	Power Dissipation Capacitance per transceiver (A to B: outputs disabled)	CL = 0, RL = Open f = 1 MHz, tr = tf = 1 ns	0.7 V	0.7 V		1.5		pF
			0.8 V	0.8 V		1.7		
			0.9 V	0.9 V		1.7		
			1.2 V	1.2 V		1.7		
			1.5 V	1.5 V		1.5		
			1.8 V	1.8 V		1.5		
			2.5 V	2.5 V		1.8		
			3.3 V	3.3 V		2.1		
	Power Dissipation Capacitance per transceiver (B to A: outputs enabled)	CL = 0, RL = Open f = 1 MHz, tr = tf = 1 ns	0.7 V	0.7 V		12.6		pF
			0.8 V	0.8 V		12.4		
			0.9 V	0.9 V		12.4		
			1.2 V	1.2 V		12.8		
			1.5 V	1.5 V		13.3		
			1.8 V	1.8 V		14.6		
			2.5 V	2.5 V		18.0		
			3.3 V	3.3 V		21.1		
	Power Dissipation Capacitance per transceiver (B to A: outputs disabled)	CL = 0, RL = Open f = 1 MHz, tr = tf = 1 ns	0.7 V	0.7 V		1.1		pF
			0.8 V	0.8 V		1.1		
			0.9 V	0.9 V		1.0		
			1.2 V	1.2 V		1.0		
			1.5 V	1.5 V		1.0		
			1.8 V	1.8 V		0.9		
			2.5 V	2.5 V		0.9		
			3.3 V	3.3 V		0.9		

Copyright © 2019, Texas Instruments Incorporated

Operating Characteristics: T_A = 25°C (continued)

PARAMETER		TEST CONDITIONS	V_{CCA}	V_{CCB}	MIN	TYP	MAX	UNIT
C_{pdB}	Power Dissipation Capacitance per transceiver (A to B: outputs enabled)	CL = 0, RL = Open f = 1 MHz, tr = tf = 1 ns	0.7 V	0.7 V		12.6		pF
			0.8 V	0.8 V		12.4		
			0.9 V	0.9 V		12.4		
			1.2 V	1.2 V		12.8		
			1.5 V	1.5 V		13.3		
			1.8 V	1.8 V		14.6		
			2.5 V	2.5 V		17.8		
			3.3 V	3.3 V		21.0		
	Power Dissipation Capacitance per transceiver (A to B: outputs disabled)	CL = 0, RL = Open f = 1 MHz, tr = tf = 1 ns	0.7 V	0.7 V		1.1		pF
			0.8 V	0.8 V		1.1		
			0.9 V	0.9 V		1.0		
			1.2 V	1.2 V		1.0		
			1.5 V	1.5 V		1.0		
			1.8 V	1.8 V		0.9		
			2.5 V	2.5 V		0.9		
			3.3 V	3.3 V		0.9		
	Power Dissipation Capacitance per transceiver (B to A: outputs enabled)	CL = 0, RL = Open f = 1 MHz, tr = tf = 1 ns	0.7 V	0.7 V		2.2		pF
			0.8 V	0.8 V		2.2		
			0.9 V	0.9 V		2.2		
			1.2 V	1.2 V		2.0		
			1.5 V	1.5 V		2.0		
			1.8 V	1.8 V		1.9		
			2.5 V	2.5 V		2.0		
			3.3 V	3.3 V		2.6		
	Power Dissipation Capacitance per transceiver (B to A: outputs disabled)	CL = 0, RL = Open f = 1 MHz, tr = tf = 1 ns	0.7 V	0.7 V		1.6		pF
			0.8 V	0.8 V		1.5		
			0.9 V	0.9 V		1.6		
			1.2 V	1.2 V		1.4		
			1.5 V	1.5 V		1.3		
			1.8 V	1.8 V		1.2		
			2.5 V	2.5 V		1.4		
			3.3 V	3.3 V		1.9		

6.15 Typical Characteristics

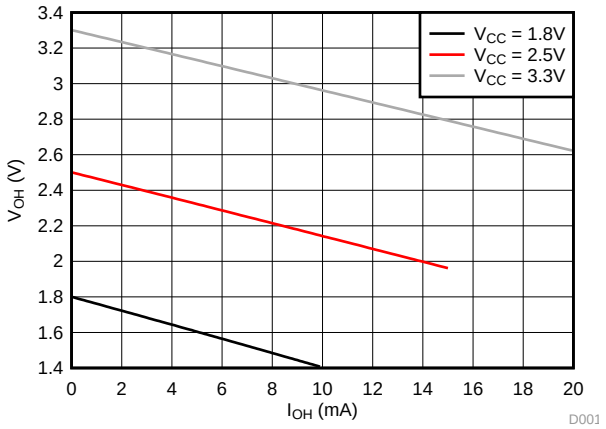

图 1. Typical (T_A=25°C) Output High Voltage (V_{OH}) vs Source Current (I_{OH})

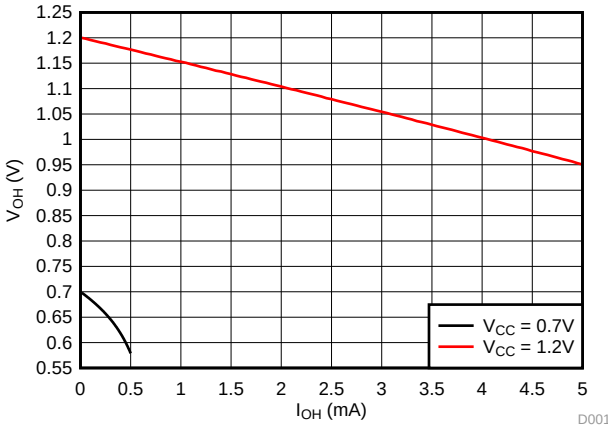

图 2. Typical (T_A=25°C) Output High Voltage (V_{OH}) vs Source Current (I_{OH})

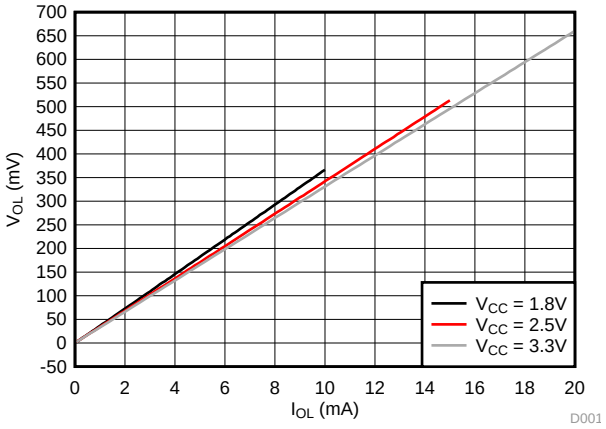

图 3. Typical (T_A=25°C) Output High Voltage (V_{OL}) vs Sink Current (I_{OL})

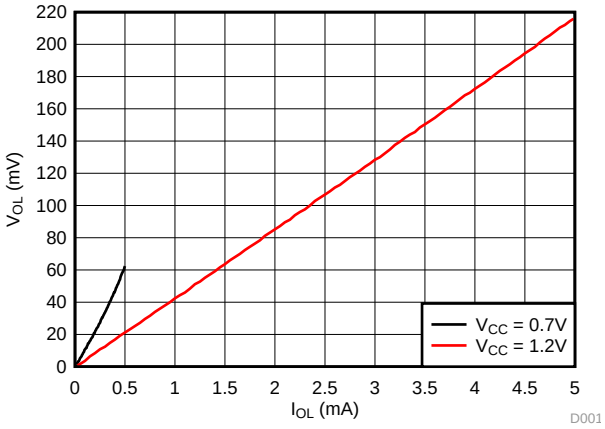

图 4. Typical (T_A=25°C) Output High Voltage (V_{OL}) vs Sink Current (I_{OL})

版权 © 2019, Texas Instruments Incorporated

7 Parameter Measurement Information

7.1 Load Circuit and Voltage Waveforms

Unless otherwise noted, all input pulses are supplied by generators having the following characteristics:

- f = 1 MHz
- Z_O = 50 Ω
- dv/dt ≤ 1 ns/V

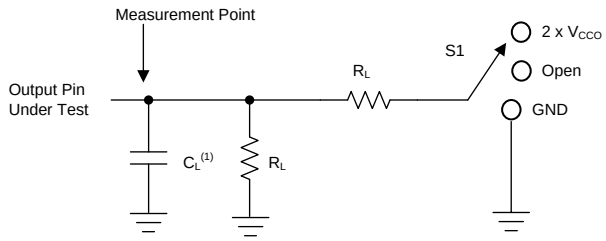

(1) C_L includes probe and jig capacitance.

图 5. Load Circuit

表 1. Load Circuit Conditions

Parameter		V_{CCO}	R_L	C_L	S_1	V_{TP}
Δt/Δv	Input transition rise or fall rate	0.65 V – 3.6 V	1 MΩ	15 pF	Open	N/A
t_{pd}	Propagation (delay) time	1.1 V – 3.6 V	2 kΩ	15 pF	Open	N/A
		0.65 V – 0.95 V	20 kΩ	15 pF	Open	N/A
t_{en}, t_{dis}	Enable time, disable time	3 V – 3.6 V	2 kΩ	15 pF	2 × V_{CCO}	0.3 V
		1.65 V – 2.7 V	2 kΩ	15 pF	2 × V_{CCO}	0.15 V
		1.1 V – 1.6 V	2 kΩ	15 pF	2 × V_{CCO}	0.1 V
		0.65 V – 0.95 V	20 kΩ	15 pF	2 × V_{CCO}	0.1 V
t_{en}, t_{dis}	Enable time, disable time	3 V – 3.6 V	2 kΩ	15 pF	GND	0.3 V
		1.65 V – 2.7 V	2 kΩ	15 pF	GND	0.15 V
		1.1 V – 1.6 V	2 kΩ	15 pF	GND	0.1 V
		0.65 V – 0.95 V	20 kΩ	15 pF	GND	0.1 V

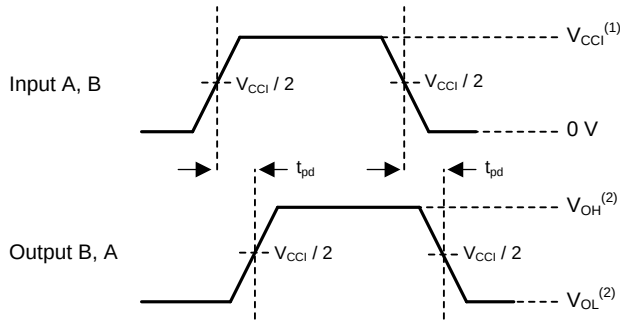

1. V_{CCI} is the supply pin associated with the input port.
2. V_{OH} and V_{OL} are typical output voltage levels that occur with specified R_L, C_L, and S_1

图 6. Propagation Delay

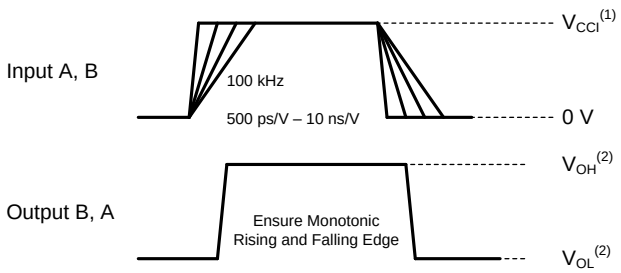

1. V_{CCI} is the supply pin associated with the input port.
2. V_{OH} and V_{OL} are typical output voltage levels that occur with specified R_L, C_L, and S_1

图 7. Input Transition Rise or Fall Rate

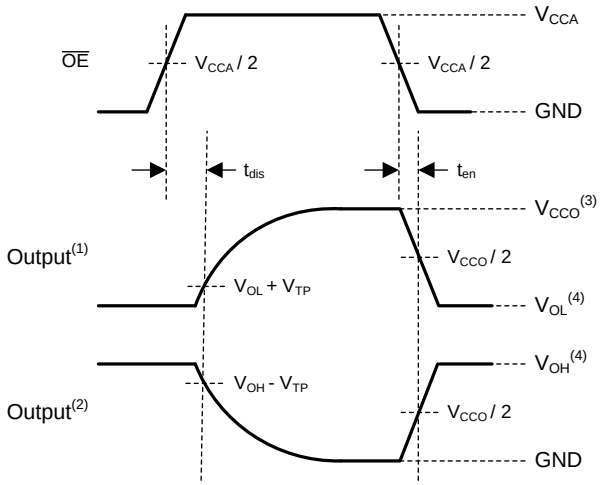

(1) Output waveform on the condition that input is driven to a valid Logic Low.
(2) Output waveform on the condition that input is driven to a valid Logic High.
(3) V_{CCO} is the supply pin associated with the output port.
(4) V_{OH} and V_{OL} are typical output voltage levels with specified R_L, C_L, and S_1.

图 8. Enable Time and Disable Time

版权 © 2019, Texas Instruments Incorporated

8 Detailed Description

8.1 Overview

The SN74AXCH4T245 is a 4-bit, dual-supply noninverting bidirectional voltage level translation device with bus-hold inputs. xAx pins and control pins (1DIR, 2DIR, 1$\overline{OE}$, and 2$\overline{OE}$) are reference to V_{CCA} logic levels, and xBx pins are referenced to V_{CCB} logic levels. The A port is able to accept I/O voltages ranging from 0.65 V to 3.6 V, while the B port can accept I/O voltages from 0.65 V to 3.6 V. A high on DIR allows data transmission from A to B and a low on DIR allows data transmission from B to A when $\overline{OE}$ is set to low. When $\overline{OE}$ is set to high, both xAx and xBx pins are in the high-impedance state. See *Device Functional Modes* for a summary of the operation of the control logic.

8.2 Functional Block Diagram

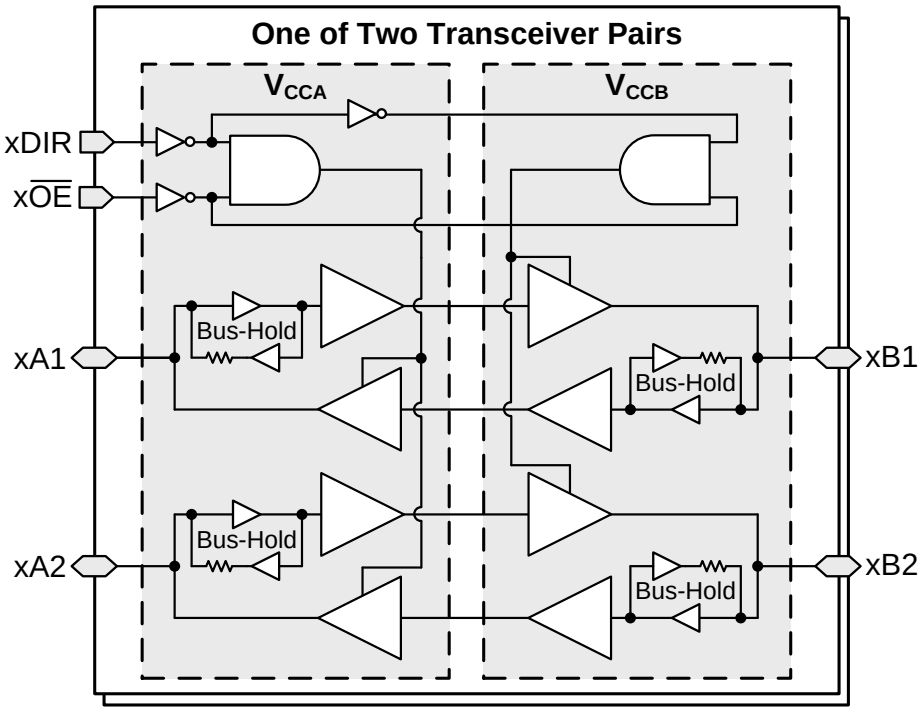

Note: Bus-hold circuits are only present for data inputs, not control inputs

8.3 Feature Description

8.3.1 Standard CMOS Inputs

Standard CMOS inputs are high impedance and are typically modeled as a resistor in parallel with the input capacitance given in the *Electrical Characteristics*. The worst case resistance is calculated with the maximum input voltage, given in the *Absolute Maximum Ratings*, and the maximum input leakage current, given in the *Electrical Characteristics*, using Ohm's law (R = V ÷ I).

Signals applied to the inputs need to have fast edge rates, as defined by $\Delta t/\Delta v$ in *Recommended Operating Conditions* to avoid excessive current consumption and oscillations. If a slow or noisy input signal is required, a device with a Schmitt-trigger input should be used to condition the input signal prior to the standard CMOS input.

8.3.2 Balanced High-Drive CMOS Push-Pull Outputs

A balanced output allows the device to sink and source similar currents. The high drive capability of this device creates fast edges into light loads so routing and load conditions should be considered to prevent ringing. Additionally, the outputs of this device are capable of driving larger currents than the device can sustain without being damaged. The electrical and thermal limits defined in the *Absolute Maximum Ratings* must be followed at all times.

Feature Description (接下页)

8.3.3 Partial Power Down (I_{off})

The inputs and outputs for this device enter a high-impedance state when the device is powered down, inhibiting current backflow into the device. The maximum leakage into or out of any input or output pin on the device is specified by I_{off} in the *Electrical Characteristics*.

8.3.4 V_{CC} Isolation

The inputs and outputs for this device enter a high-impedance state when either supply is <100mV.

8.3.5 Over-voltage Tolerant Inputs

Input signals to this device can be driven above the supply voltage so long as they remain below the maximum input voltage value specified in the *Recommended Operating Conditions*.

8.3.6 Glitch-free Power Supply Sequencing

Either supply rail may be powered on or off in any order without producing a glitch on the I/Os (that is, where the output erroneously transitions to VCC when it should be held low). Glitches of this nature can be misinterpreted by a peripheral as a valid data bit, which could trigger a false device reset of the peripheral, a false device configuration of the peripheral, or even a false data initialization by the peripheral. For more information regarding the power up glitch performance of the AXC family of level translators, see the *Glitch Free Power Sequencing With AXC Level Translators* application report

8.3.7 Negative Clamping Diodes

The inputs and outputs to this device have negative clamping diodes as depicted in 图 9.

CAUTION

Voltages beyond the values specified in the *Absolute Maximum Ratings* table can cause damage to the device. The input negative-voltage and output voltage ratings may be exceeded if the input and output clamp-current ratings are observed.

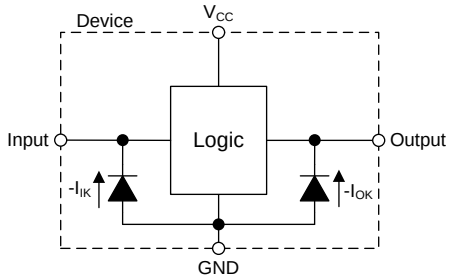

图 9. Electrical Placement of Clamping Diodes for Each Input and Output

8.3.8 Fully Configurable Dual-Rail Design

Both the V_{CCA} and V_{CCB} pins can be supplied at any voltage from 0.65 V to 3.6 V, making the device suitable for translating between any of the voltage nodes (0.7 V, 0.8 V, 0.9 V, 1.2 V, 1.8 V, 2.5 V and 3.3 V).

8.3.9 Supports High-Speed Translation

The SN74AXCH4T245 device can support high data-rate applications. The translated signal data rate can be up to 380 Mbps when the signal is translated from 1.8 V to 3.3 V.

版权 © 2019, Texas Instruments Incorporated

Feature Description (接下页)

8.3.10 Bus-Hold Data Inputs

Each data input on this device includes a weak latch that maintains a valid logic level on the input. The state of these latches is unknown at startup and remains unknown until the input has been forced to a valid high or low state. After data has been sent through a channel, the latch then maintains the previous state on the input if the line is left floating. It is not recommended to use pull-up or pull-down resistors together with a bus-hold input, as it may cause undefined inputs to occur which leads to excessive current consumption.

Bus-hold data inputs prevent floating inputs on this device. The *Implications of Slow or Floating CMOS Inputs* application report explains the problems associated with leaving CMOS inputs floating.

These latches remain active at all times, independent of all control signals such as direction control or output enable.

The *Bus-Hold Circuit* application report has additional details regarding bus-hold inputs.

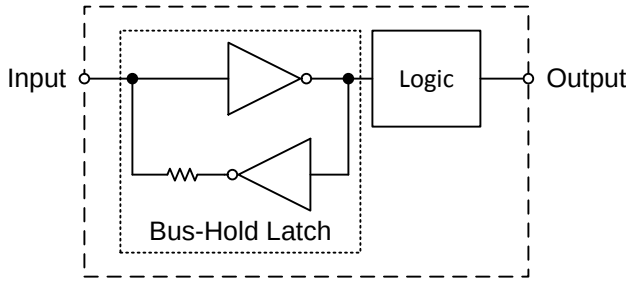

图 10. Simplified Schematic For Device With Bus-Hold Data Inputs

8.4 Device Functional Modes

表 2. Function Table (Each 2-Bit Section)(1)(2)

CONTROL INPUTS		Port Status		OPERATION
$\overline{OE}$	DIR	A PORT	B PORT	
L	L	Output (Enabled)	Input (Hi-Z)	B data to A bus
L	H	Input (Hi-Z)	Output (Enabled)	A data to B bus
H	X	Input (Hi-Z)	Input (Hi-Z)	Isolation

(1) Input circuits of the data I/Os are always active.
(2) Bus-hold circuits of the data I/Os are always active, independent of the state of the control inputs.

9 Application and Implementation

注

Information in the following applications sections is not part of the TI component specification, and TI does not warrant its accuracy or completeness. TI's customers are responsible for determining suitability of components for their purposes. Customers should validate and test their design implementation to confirm system functionality.

9.1 Application Information

The SN74AXCH4T245 device can be used in level-translation applications for interfacing devices or systems operating at different interface voltages with one another. The SN74AXCH4T245 device is ideal for use in applications where a push-pull driver is connected to the data I/Os. The max data rate can be up to 380 Mbps when device translates a signal from 1.8 V to 3.3 V.

One example application is shown in 图 11, where the SN74AXCH4T245 device is used to translate a low voltage UART signal from an SoC to a higher voltage signal which properly drive the inputs of the bluetooth module, and vice versa.

9.2 Typical Application

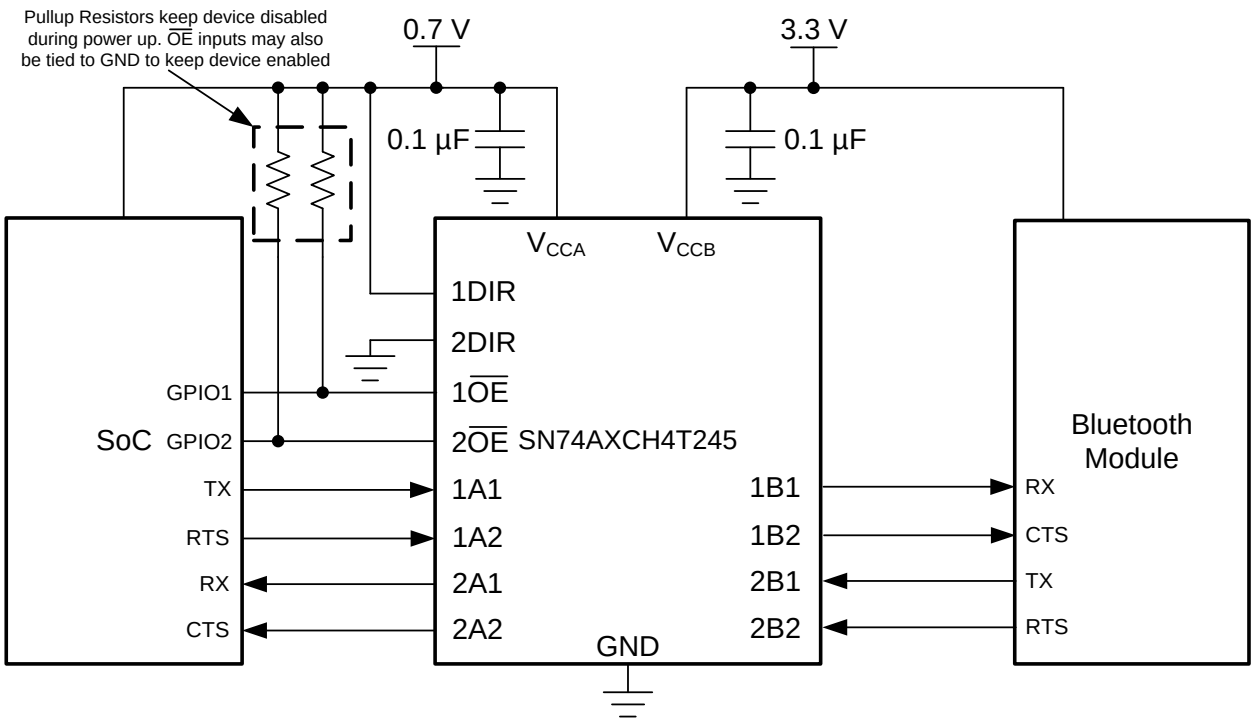

图 11. UART Interface Application

9.2.1 Design Requirements

For this design example, use the parameters listed in 表 3.

表 3. Design Parameters

DESIGN PARAMETERS	EXAMPLE VALUES
Input voltage range	0.65 V to 3.6 V
Output voltage range	0.65 V to 3.6 V

版权 © 2019, Texas Instruments Incorporated

9.2.2 Detailed Design Procedure

To begin the design process, determine the following:

- Input voltage range
  - Use the supply voltage of the device that is driving the SN74AXCH4T245 device to determine the input voltage range. For a valid logic-high, the value must exceed the high-level input voltage (V_{IH}) of the input port. For a valid logic low the value must be less than the low-level input voltage (V_{IL}) of the input port.
- Output voltage range
  - Use the supply voltage of the device that the SN74AXCH4T245 device is driving to determine the output voltage range.

9.2.3 Application Curve

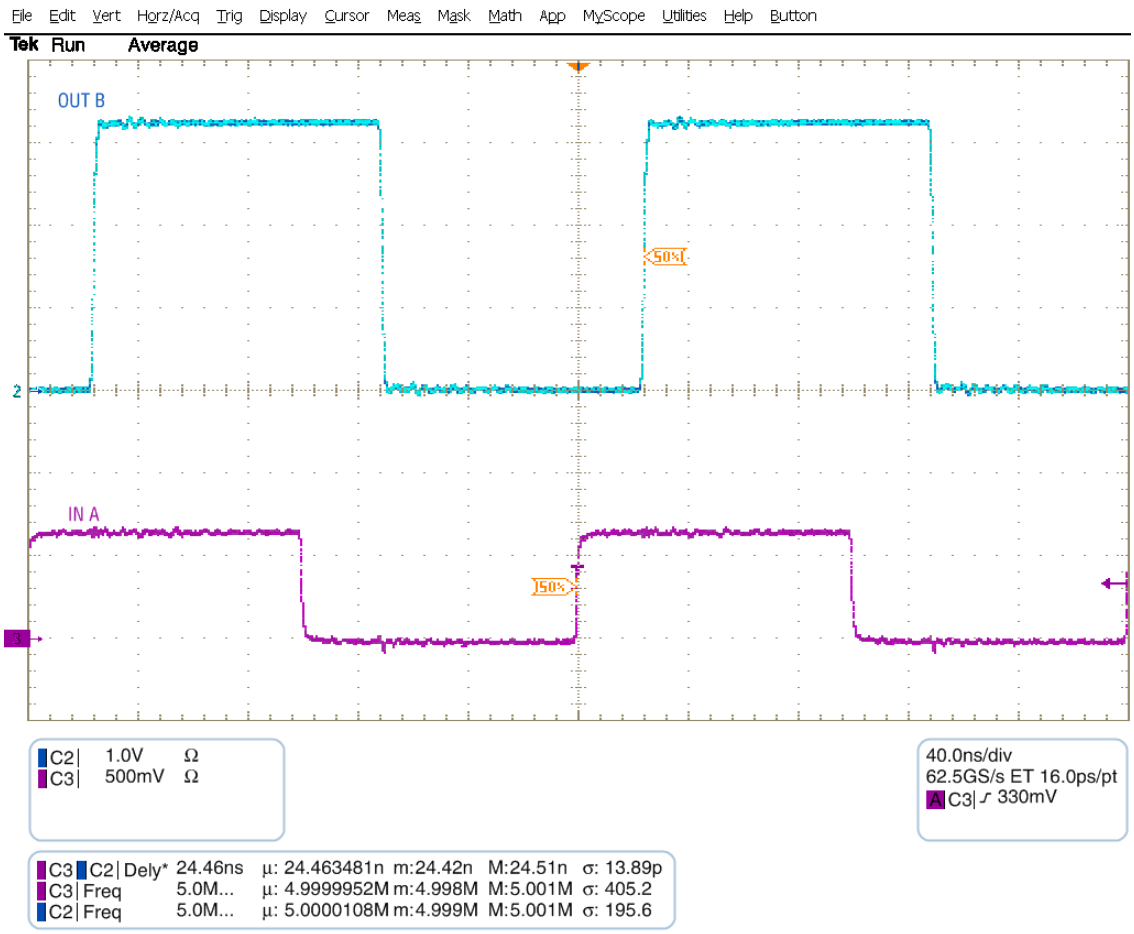

图 12. Up Translation at 2.5 MHz (0.7 V to 3.3 V)

10 Power Supply Recommendations

Always apply a ground reference to the GND pins first. This device is designed for glitch free power sequencing without any supply sequencing requirements such as ramp order or ramp rate.

This device was designed with various power supply sequencing methods in mind to help prevent unintended triggering of downstream devices. For more information regarding the power up glitch performance of the AXC family of level translators, see the *Glitch Free Power Sequencing With AXC Level Translators* application report

11 Layout

11.1 Layout Guidelines

To ensure reliability of the device, following common printed-circuit board layout guidelines are recommended:

- Use bypass capacitors on the power supply pins and place them as close to the device as possible.
- Use short trace lengths to avoid excessive loading.
- Do not use pullup or pulldown resistors on data inputs for devices with bus-hold circuits.

11.2 Layout Example

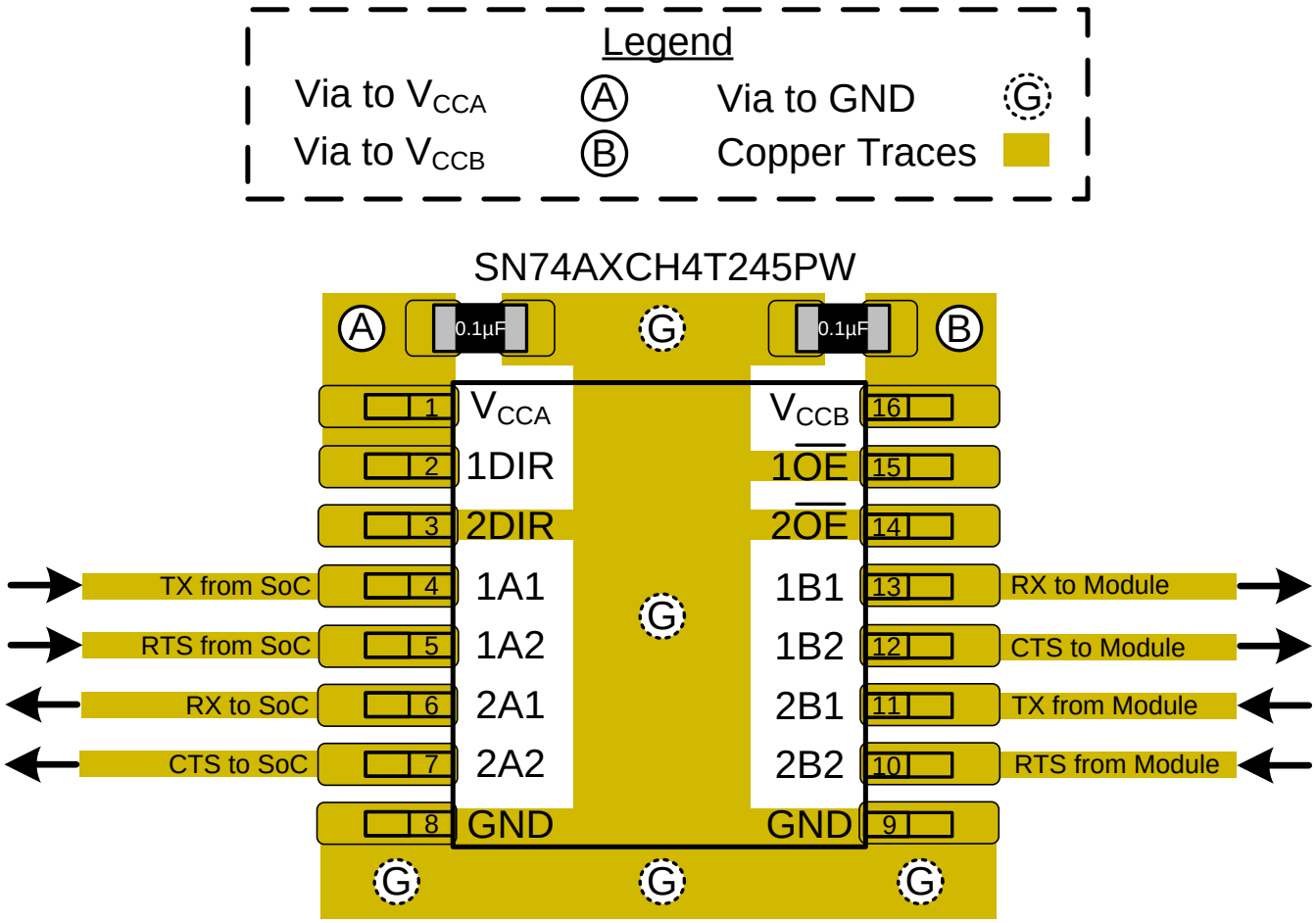

版权 © 2019, Texas Instruments Incorporated

12 器件和文档支持

12.1 相关文档

请参阅如下相关文档：

德州仪器 (TI)，*《慢速或浮点 CMOS 输入的影响》*应用报告
德州仪器 (TI)，*《AXC 系列器件电源定序》* 应用报告
德州仪器 (TI)，*《利用总线保持电路避免浮点输入系统注意事项》*应用报告

12.2 接收文档更新通知

要接收文档更新通知，请导航至 TI.com.cn 上的器件产品文件夹。单击右上角的*通知我* 进行注册，即可每周接收产品信息更改摘要。有关更改的详细信息，请查看任何已修订文档中包含的修订历史记录。

12.3 社区资源

下列链接提供到 TI 社区资源的连接。链接的内容由各个分销商"按照原样"提供。这些内容并不构成 TI 技术规范，并且不一定反映 TI 的观点；请参阅 TI 的 《使用条款》。

TI E2E™ Online Community ***TI's Engineer-to-Engineer (E2E) Community.*** Created to foster collaboration among engineers. At e2e.ti.com, you can ask questions, share knowledge, explore ideas and help solve problems with fellow engineers.

Design Support ***TI's Design Support*** Quickly find helpful E2E forums along with design support tools and contact information for technical support.

12.4 商标

E2E is a trademark of Texas Instruments.

12.5 静电放电警告

ESD 可能会损坏该集成电路。德州仪器 (TI) 建议通过适当的预防措施处理所有集成电路。如果不遵守正确的处理措施和安装程序，可能会损坏集成电路。

ESD 的损坏小至导致微小的性能降级，大至整个器件故障。 精密的集成电路可能更容易受到损坏，这是因为非常细微的参数更改都可能会导致器件与其发布的规格不相符。

12.6 术语表

SLYZ022 — *TI 术语表*。

这份术语表列出并解释术语、缩写和定义。

13 机械、封装和可订购信息

以下页面包含机械、封装和可订购信息。这些信息是指定器件的最新可用数据。数据如有变更，恕不另行通知，且不会对此文档进行修订。如需获取此数据表的浏览器版本，请查阅左侧的导航栏。

版权 © 2019, Texas Instruments Incorporated

PACKAGING INFORMATION

Orderable part number	Status (1)	Material type (2)	Package | Pins	Package qty | Carrier	RoHS (3)	Lead finish/ Ball material (4)	MSL rating/ Peak reflow (5)	Op temp (°C)	Part marking (6)
74AXCH4T245RSVRG4.A	Active	Production	UQFN (RSV) | 16	3000 | LARGE T&R	Yes	NIPDAU	Level-1-260C-UNLIM	-40 to 125	1U7R
SN74AXCH4T245PWR	Active	Production	TSSOP (PW) | 16	2000 | LARGE T&R	Yes	NIPDAU | SN	Level-1-260C-UNLIM	-40 to 125	S4TH245
SN74AXCH4T245PWR.A	Active	Production	TSSOP (PW) | 16	2000 | LARGE T&R	Yes	NIPDAU	Level-1-260C-UNLIM	-40 to 125	S4TH245
SN74AXCH4T245RSVR	Active	Production	UQFN (RSV) | 16	3000 | LARGE T&R	Yes	NIPDAU	Level-1-260C-UNLIM	-40 to 125	1U7R
SN74AXCH4T245RSVR.A	Active	Production	UQFN (RSV) | 16	3000 | LARGE T&R	Yes	NIPDAU	Level-1-260C-UNLIM	-40 to 125	1U7R

(1) **Status:** For more details on status, see our product life cycle.

(2) **Material type:** When designated, preproduction parts are prototypes/experimental devices, and are not yet approved or released for full production. Testing and final process, including without limitation quality assurance, reliability performance testing, and/or process qualification, may not yet be complete, and this item is subject to further changes or possible discontinuation. If available for ordering, purchases will be subject to an additional waiver at checkout, and are intended for early internal evaluation purposes only. These items are sold without warranties of any kind.

(3) **RoHS values:** Yes, No, RoHS Exempt. See the TI RoHS Statement for additional information and value definition.

(4) **Lead finish/Ball material:** Parts may have multiple material finish options. Finish options are separated by a vertical ruled line. Lead finish/Ball material values may wrap to two lines if the finish value exceeds the maximum column width.

(5) **MSL rating/Peak reflow:** The moisture sensitivity level ratings and peak solder (reflow) temperatures. In the event that a part has multiple moisture sensitivity ratings, only the lowest level per JEDEC standards is shown. Refer to the shipping label for the actual reflow temperature that will be used to mount the part to the printed circuit board.

(6) **Part marking:** There may be an additional marking, which relates to the logo, the lot trace code information, or the environmental category of the part.

Multiple part markings will be inside parentheses. Only one part marking contained in parentheses and separated by a "~" will appear on a part. If a line is indented then it is a continuation of the previous line and the two combined represent the entire part marking for that device.

Important Information and Disclaimer: The information provided on this page represents TI's knowledge and belief as of the date that it is provided. TI bases its knowledge and belief on information provided by third parties, and makes no representation or warranty as to the accuracy of such information. Efforts are underway to better integrate information from third parties. TI has taken and continues to take reasonable steps to provide representative and accurate information but may not have conducted destructive testing or chemical analysis on incoming materials and chemicals. TI and TI suppliers consider certain information to be proprietary, and thus CAS numbers and other limited information may not be available for release.

In no event shall TI's liability arising out of such information exceed the total purchase price of the TI part(s) at issue in this document sold by TI to Customer on an annual basis.

TAPE AND REEL INFORMATION

REEL DIMENSIONS

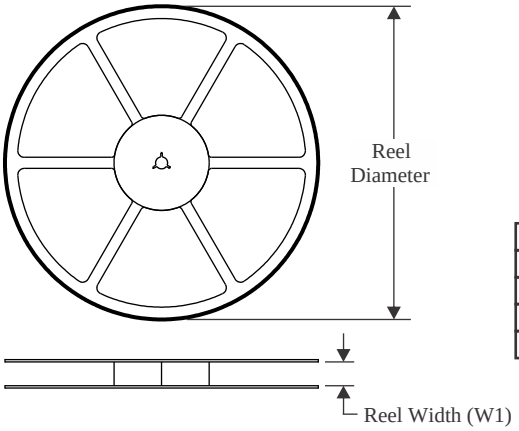

TAPE DIMENSIONS

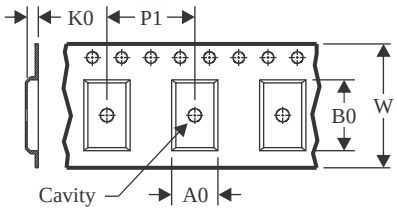

A0	Dimension designed to accommodate the component width
B0	Dimension designed to accommodate the component length
K0	Dimension designed to accommodate the component thickness
W	Overall width of the carrier tape
P1	Pitch between successive cavity centers

QUADRANT ASSIGNMENTS FOR PIN 1 ORIENTATION IN TAPE

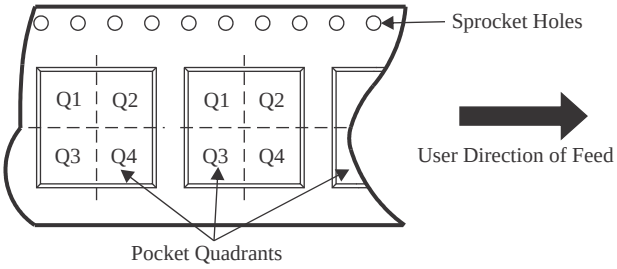

*All dimensions are nominal

Device	Package Type	Package Drawing	Pins	SPQ	Reel Diameter (mm)	Reel Width W1 (mm)	A0 (mm)	B0 (mm)	K0 (mm)	P1 (mm)	W (mm)	Pin1 Quadrant
SN74AXCH4T245PWR	TSSOP	PW	16	2000	330.0	12.4	6.9	5.3	1.6	8.0	12.0	Q1
SN74AXCH4T245PWR	TSSOP	PW	16	2000	330.0	12.4	6.9	5.6	1.6	8.0	12.0	Q1
SN74AXCH4T245RSVR	UQFN	RSV	16	3000	178.0	13.5	2.1	2.9	0.75	4.0	12.0	Q1

TAPE AND REEL BOX DIMENSIONS

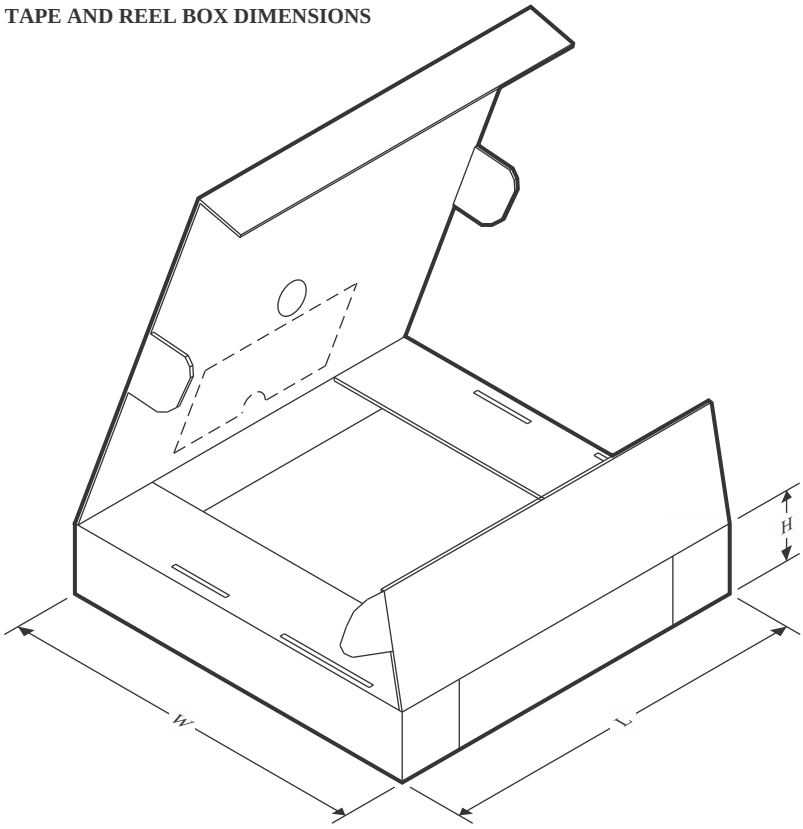

*All dimensions are nominal

Device	Package Type	Package Drawing	Pins	SPQ	Length (mm)	Width (mm)	Height (mm)
SN74AXCH4T245PWR	TSSOP	PW	16	2000	367.0	367.0	35.0
SN74AXCH4T245PWR	TSSOP	PW	16	2000	356.0	356.0	35.0
SN74AXCH4T245RSVR	UQFN	RSV	16	3000	189.0	185.0	36.0

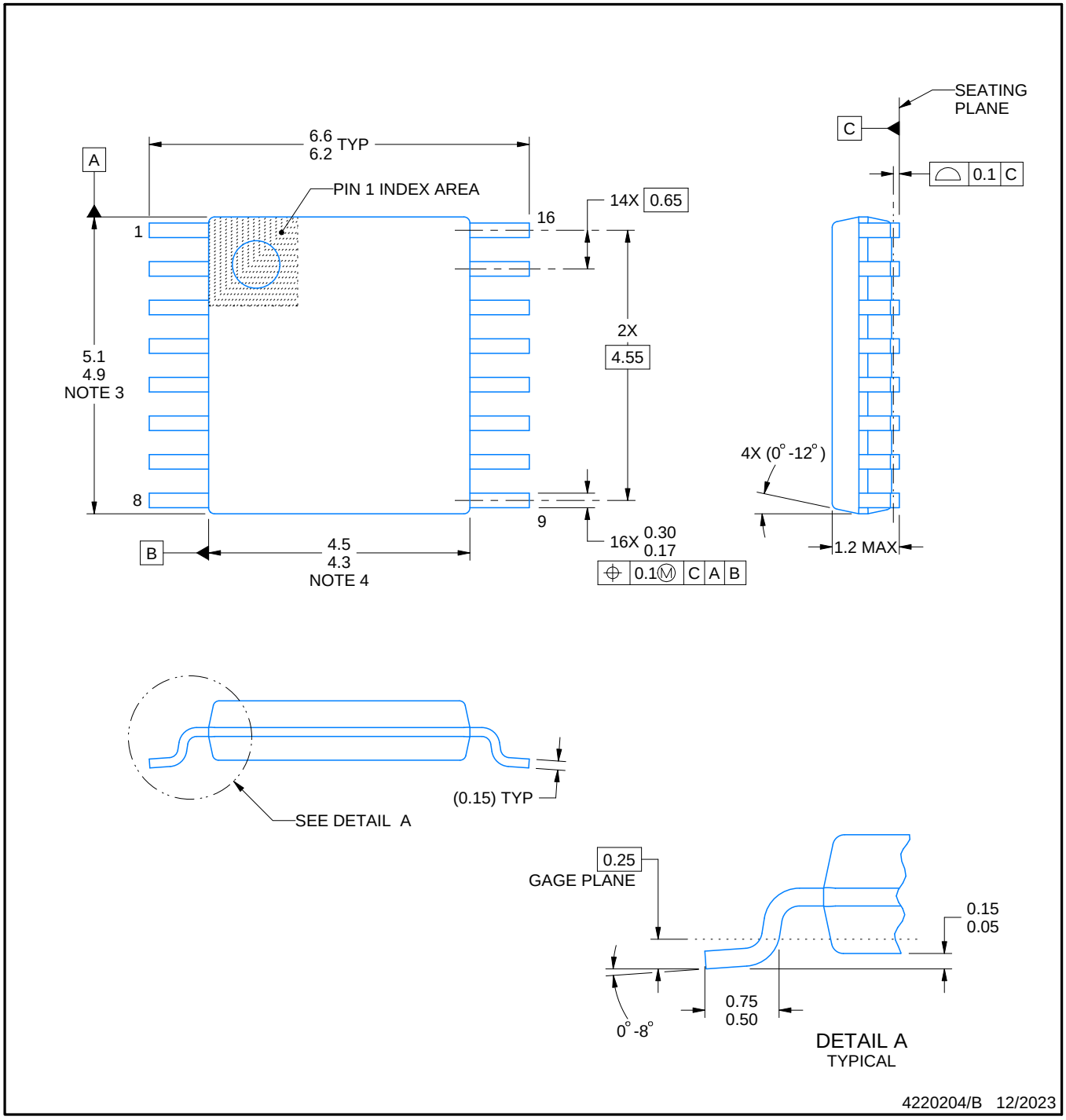

NOTES:

1. All linear dimensions are in millimeters. Any dimensions in parenthesis are for reference only. Dimensioning and tolerancing per ASME Y14.5M.
2. This drawing is subject to change without notice.
3. This dimension does not include mold flash, protrusions, or gate burrs. Mold flash, protrusions, or gate burrs shall not exceed 0.15 mm per side.
4. This dimension does not include interlead flash. Interlead flash shall not exceed 0.25 mm per side.
5. Reference JEDEC registration MO-153.

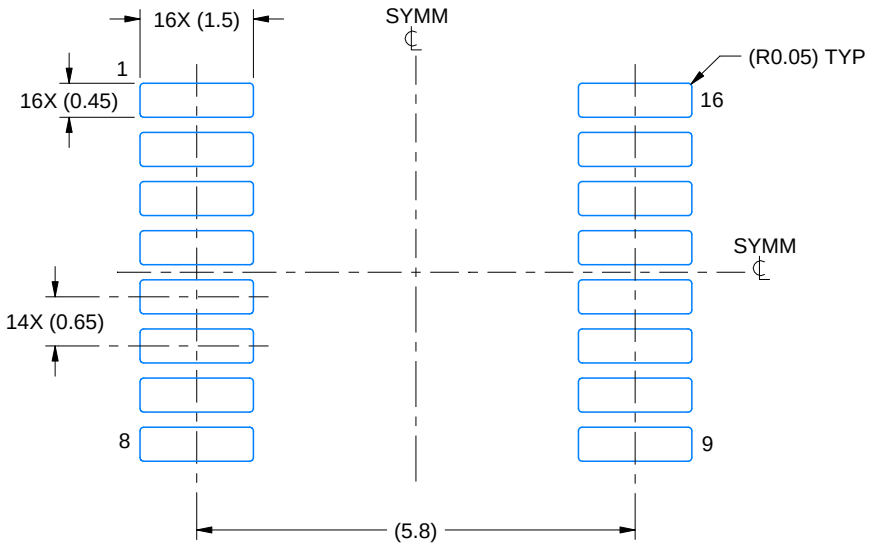

LAND PATTERN EXAMPLE
EXPOSED METAL SHOWN
SCALE: 10X

NON-SOLDER MASK DEFINED (PREFERRED)

SOLDER MASK DEFINED

SOLDER MASK DETAILS

4220204/B 12/2023

NOTES: (continued)

6. Publication IPC-7351 may have alternate designs.
7. Solder mask tolerances between and around signal pads can vary based on board fabrication site.

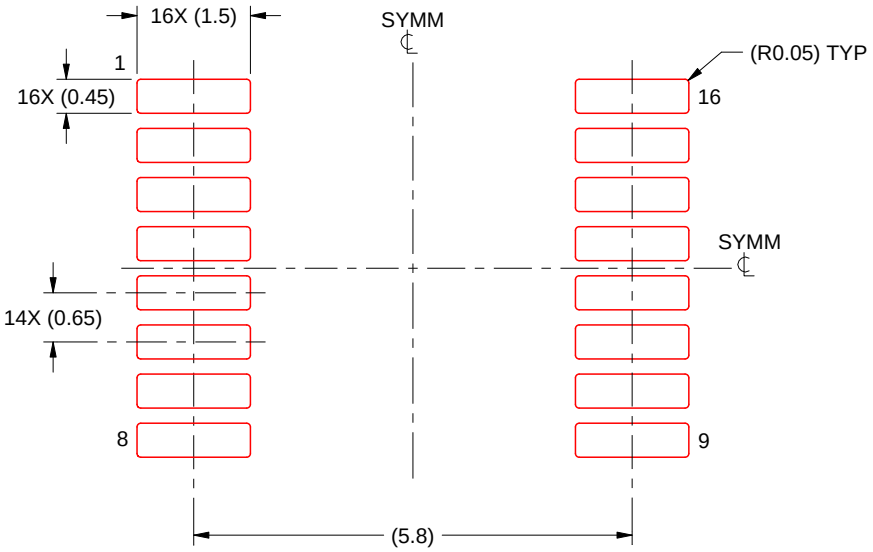

SOLDER PASTE EXAMPLE
BASED ON 0.125 mm THICK STENCIL
SCALE: 10X

4220204/B 12/2023

NOTES: (continued)

8. Laser cutting apertures with trapezoidal walls and rounded corners may offer better paste release. IPC-7525 may have alternate design recommendations.
9. Board assembly site may have different recommendations for stencil design.

GENERIC PACKAGE VIEW

RSV 16

UQFN - 0.55 mm max height

1.8 x 2.6, 0.4 mm pitch

ULTRA THIN QUAD FLATPACK - NO LEAD

This image is a representation of the package family, actual package may vary.
Refer to the product data sheet for package details.

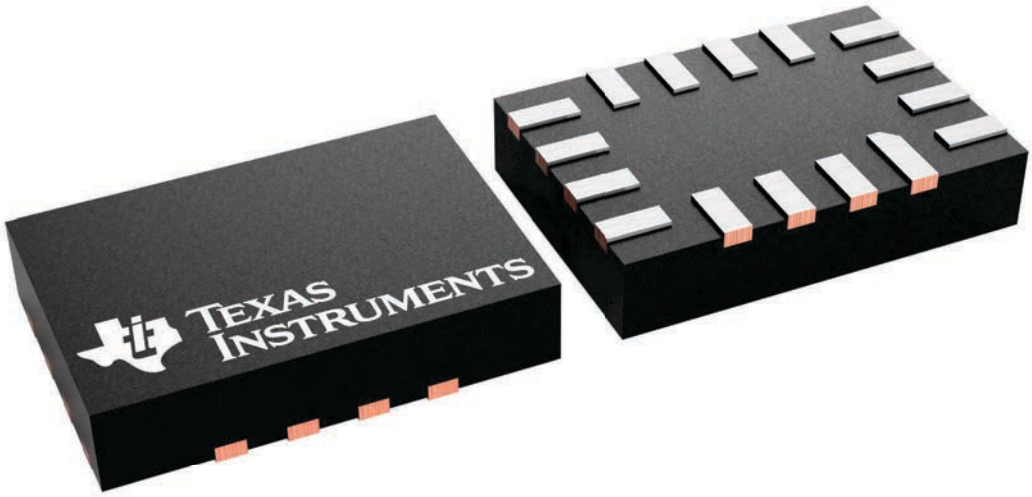

4231225/A

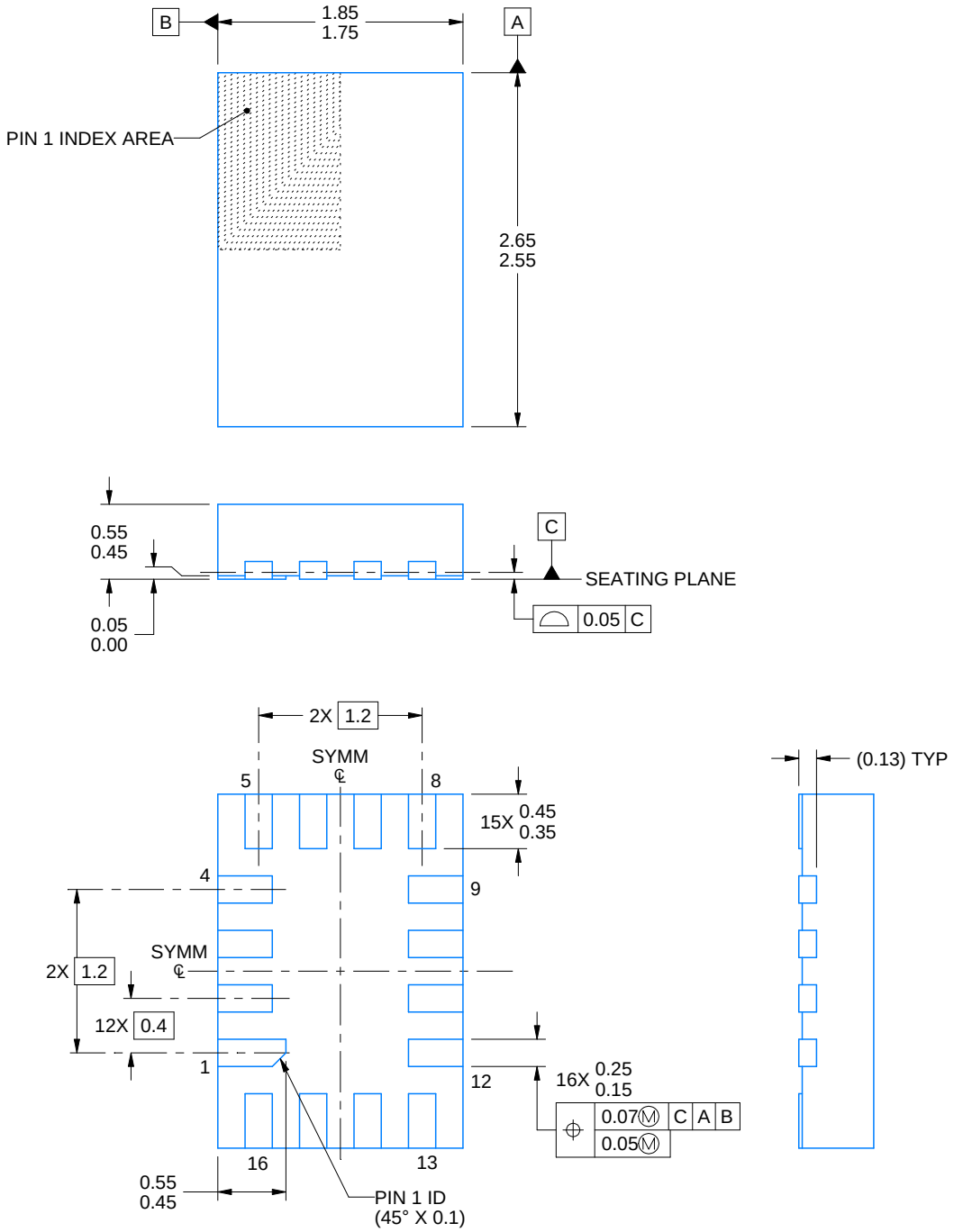

NOTES:

1. All linear dimensions are in millimeters. Any dimensions in parenthesis are for reference only. Dimensioning and tolerancing per ASME Y14.5M.
2. This drawing is subject to change without notice.

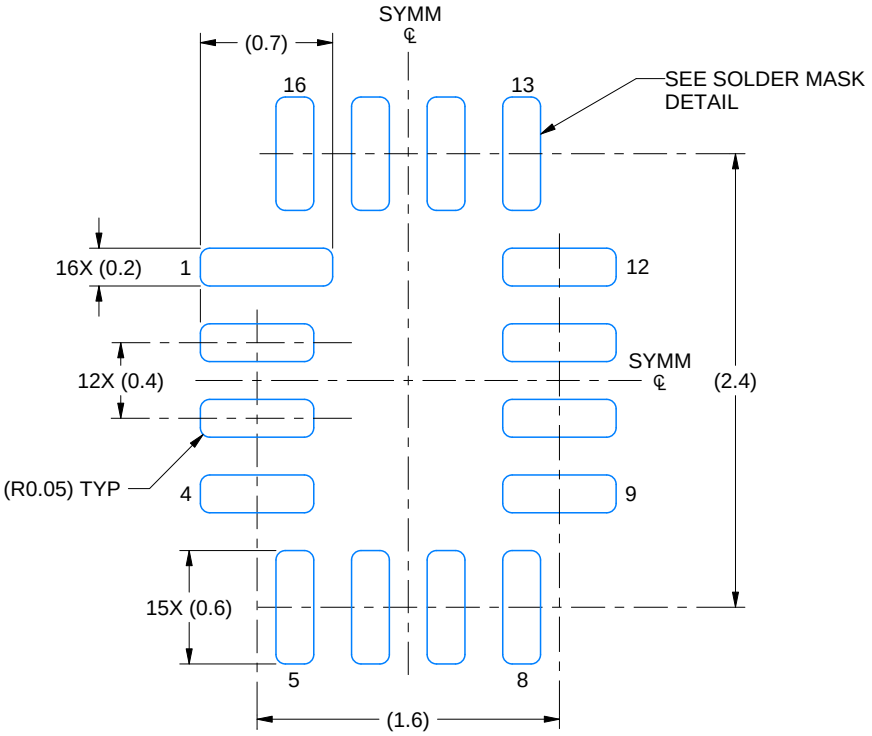

LAND PATTERN EXAMPLE
EXPOSED METAL SHOWN
SCALE: 25X

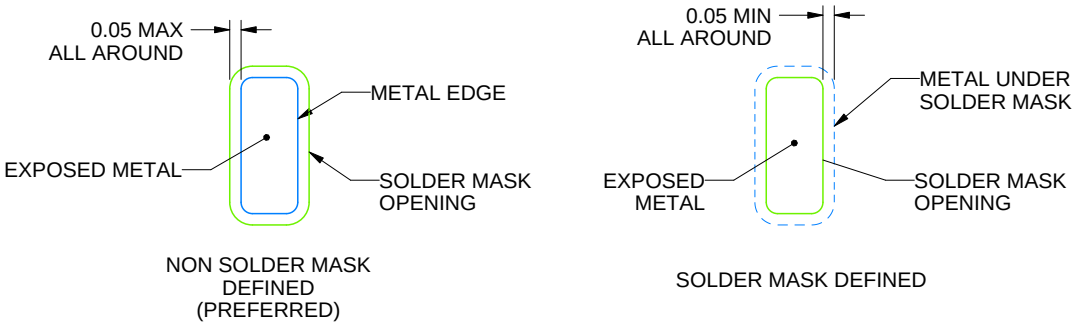

SOLDER MASK DETAILS

4220314/C 02/2020

NOTES: (continued)

3. For more information, see Texas Instruments literature number SLUA271 (www.ti.com/lit/slua271).

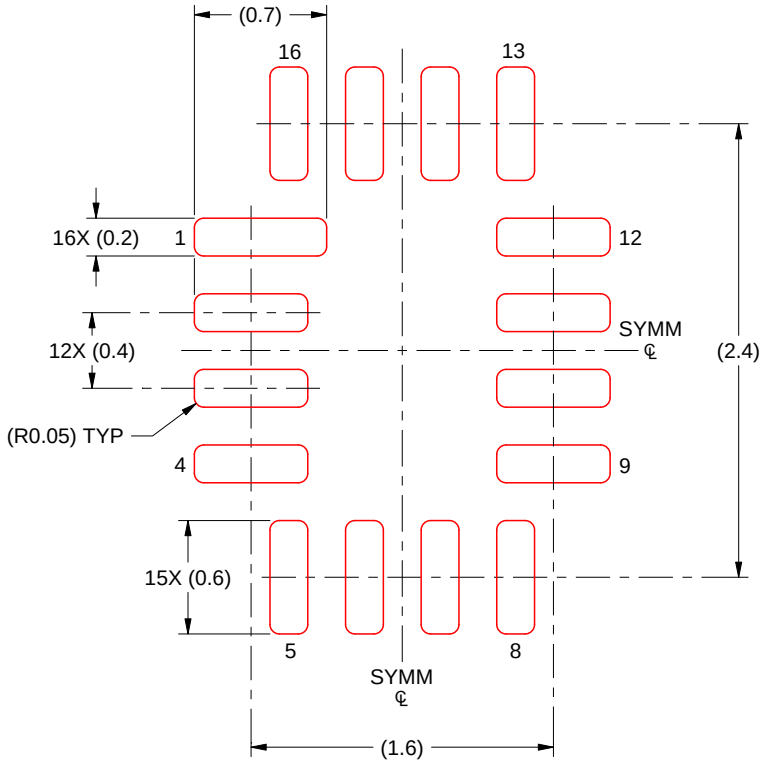

SOLDER PASTE EXAMPLE
BASED ON 0.125 MM THICK STENCIL
SCALE: 25X

4220314/C 02/2020

NOTES: (continued)

4. Laser cutting apertures with trapezoidal walls and rounded corners may offer better paste release. IPC-7525 may have alternate design recommendations.

重要通知和免责声明

TI“按原样”提供技术和可靠性数据（包括数据表）、设计资源（包括参考设计）、应用或其他设计建议、网络工具、安全信息和其他资源，不保证没有瑕疵且不做出任何明示或暗示的担保，包括但不限于对适销性、与某特定用途的适用性或不侵犯任何第三方知识产权的暗示担保。

这些资源可供使用 TI 产品进行设计的熟练开发人员使用。您将自行承担以下全部责任：(1) 针对您的应用选择合适的 TI 产品，(2) 设计、验证并测试您的应用，(3) 确保您的应用满足相应标准以及任何其他安全、安保法规或其他要求。

这些资源如有变更，恕不另行通知。TI 授权您仅可将这些资源用于研发本资源所述的 TI 产品的相关应用。严禁以其他方式对这些资源进行复制或展示。您无权使用任何其他 TI 知识产权或任何第三方知识产权。对于因您对这些资源的使用而对 TI 及其代表造成的任何索赔、损害、成本、损失和债务，您将全额赔偿，TI 对此概不负责。

TI 提供的产品受 TI 销售条款)、TI 通用质量指南 或 ti.com 上其他适用条款或 TI 产品随附的其他适用条款的约束。TI 提供这些资源并不会扩展或以其他方式更改 TI 针对 TI 产品发布的适用的担保或担保免责声明。 除非德州仪器 (TI) 明确将某产品指定为定制产品或客户特定产品，否则其产品均为按确定价格收入目录的标准通用器件。

TI 反对并拒绝您可能提出的任何其他或不同的条款。

版权所有 © 2026，德州仪器 (TI) 公司

最后更新日期：2025 年 10 月