SNx4AHCT04 六路反相器

1 特性

- 输入兼容 TTL 电压
- 闩锁性能超过 250mA，符合 JESD 17 规范
- 对于符合 MIL-PRF-38535 标准的产品，所有参数均经过测试，除非另有说明。对于所有其他产品，生产流程不一定包含对所有参数的测试。

2 应用

- 服务器
- 网络交换机
- 电信基础设施
- 测试和测量

3 说明

SNx4AHCT04 器件包含六个独立的反相器。这些器件执行布尔函数 $Y = \overline{A}$。

封装信息

器件型号	封装(1)	封装尺寸（标称值）(2)
SN54AHCT04	J（CDIP，14）	19.56mm x 6.67mm
	W（CFP，14）	13.09mm × 6.92mm
	FK（LCCC，20）	8.89mm × 8.89mm
SN74AHCT04	N（PDIP，14）	19.3mm × 6.35mm
	D（SOIC，14）	8.65mm × 3.91mm
	NS（SOP，14）	10.30mm x 5.30mm
	DB（SSOP，14）	6.20mm x 5.30mm
	PW（TSSOP，14）	5.00mm × 4.40mm
	DGV（TVSOP，14）	3.60mm x 4.40mm
	RGY（VQFN，14）	3.50mm × 3.50mm
	BQA（WQFN，14）	3.00mm x 2.50mm

(1) 更多相关信息，请参阅第 11 节。
(2) 封装尺寸（长 × 宽）为标称值，不包括引脚。

简化版原理图

本资源的原文使用英文撰写。 为方便起见，TI 提供了译文；由于翻译过程中可能使用了自动化工具，TI 不保证译文的准确性。 为确认准确性，请务必访问 ti.com 参考最新的英文版本（控制文档）。

Table of Contents

1 特性 1
2 应用 1
3 说明 1
4 Pin Configuration and Functions 3
5 Specifications 4
5.1 Absolute Maximum Ratings 4
5.2 ESD Ratings 4
5.3 Recommended Operating Conditions 4
5.4 Thermal Information 5
5.5 Electrical Characteristics 5
5.6 Switching Characteristics, V_{CC} = 5 V ± 0.5 V 5
5.7 Noise Characteristics 6
5.8 Operating Characteristics 6
5.9 Typical Characteristics 6
6 Parameter Measurement Information 7
7 Detailed Description 8
7.1 Overview 8
7.2 Functional Block Diagram 8
7.3 Feature Description 8
7.4 Device Functional Modes 8
8 Application and Implementation 9
8.1 Application Information 9
8.2 Typical Application 9
8.3 Power Supply Recommendations 10
8.4 Layout 10
9 Device and Documentation Support 12
9.1 Documentation Support (Analog) 12
9.2 接收文档更新通知 12
9.3 支持资源 12
9.4 Trademarks 12
9.5 静电放电警告 12
9.6 术语表 12
10 Revision History 12
11 Mechanical, Packaging, and Orderable Information 13

Copyright © 2024 Texas Instruments Incorporated

4 Pin Configuration and Functions

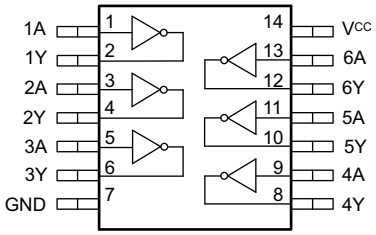

图 4-1. SN54AHCT04 J or W Package, 14-Pin (Top View)
SN74AHCT04 D, DB, DGV, N, NS, or PW Package, 14-Pin (Top View)

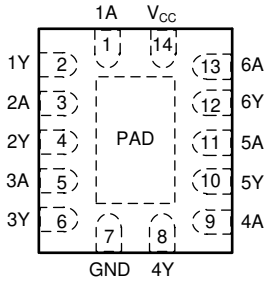

图 4-2. SN74AHCT04 RGY or BQA Package, 14-Pin (Top View)

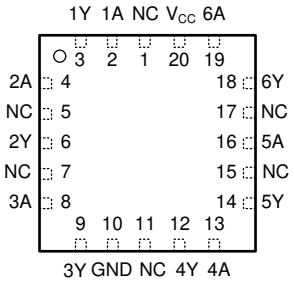

图 4-3. SN54AHCT04 FK Package, 20-Pin (Top View)

表 4-1. Pin Functions

PIN					TYPE[(1)]	DESCRIPTION
NAME	SN74AHCT04		SN54AHCT04			
	D, DB, DGV, N, NS, PW	RGY, BQA	J, W	FK		
1A	1	1	1	2	I	1A Input
1Y	2	2	2	3	O	1Y Output
2A	3	3	3	4	I	2A Input
2Y	4	4	4	6	O	2Y Output
3A	5	5	5	8	I	3A Input
3Y	6	6	6	9	O	3Y Output
4A	9	9	9	13	I	4A Input
4Y	8	8	8	12	O	4Y Output
5A	11	11	11	16	I	5A Input
5Y	10	10	10	14	I	5Y Output
6A	13	13	13	19	I	6A Input
6Y	12	12	12	18	O	6Y Output
GND	7	7	7	10	—	Ground Pin
NC	—	—	—	1, 5, 7, 11, 15, 17	—	No Connection
V_{CC}	14	14	14	20	—	Power Pin
Thermal Pad	—	PAD	—	—	—	Thermal Pad

(1) I = input, O = output

5 Specifications

5.1 Absolute Maximum Ratings

over operating free-air temperature range (unless otherwise noted)[1]

			MIN	MAX	UNIT
V_{CC}	Supply voltage range		– 0.5	7	V
V_I	Input voltage range[2]		– 0.5	7	V
V_O	Output voltage range[2]		– 0.5	V_{CC} + 0.5	V
I_{IK}	Input clamp current	V_I < 0		– 20	mA
I_{OK}	Output clamp current	V_O < 0 or V_O > V_{CC}		±20	mA
I_O	Continuous output current	V_O = 0 to V_{CC}		±25	mA
	Continuous current through V_{CC} or GND			±50	mA
T_{stg}	Storage temperature range		– 65	150	°C

(1) Stresses beyond those listed under *Absolute Maximum Ratings* may cause permanent damage to the device. These are stress ratings only, which do not imply functional operation of the device at these or any other conditions beyond those indicated under *Recommended Operating Conditions*. Exposure to absolute-maximum-rated conditions for extended periods may affect device reliability.
(2) The input and output voltage ratings may be exceeded if the input and output current ratings are observed.

5.2 ESD Ratings

			Value	UNIT
$V_{(ESD)}$	Electrostatic discharge	Human body model (HBM), per ANSI/ESDA/JEDEC JS-001, all pins[1]	±2000	V
		Charged device model (CDM), per ANSI/ESDA/JEDEC JS-002, all pins[2]	±1000	

(1) JEDEC document JEP155 states that 500-V HBM allows safe manufacturing with a standard ESD control process.
(2) JEDEC document JEP157 states that 250-V CDM allows safe manufacturing with a standard ESD control process.

5.3 Recommended Operating Conditions

over operating free-air temperature range (unless otherwise noted)[1]

		SN54AHCT04		SN74AHCT04		UNIT
		MIN	MAX	MIN	MAX	
V_{CC}	Supply voltage	4.5	5.5	4.5	5.5	V
V_{IH}	High-level input voltage	2		2		V
V_{IL}	Low-level input voltage		0.8	0	0.8	V
V_I	Input voltage	0	5.5	0	5.5	V
V_O	Output voltage	0	V_{CC}	0	V_{CC}	V
I_{OH}	High-level output current		– 8		– 8	mA
I_{OL}	Low-level output current		8		8	mA
$\Delta t/\Delta v$	Input transition rise or fall rate		20		20	ns/V
T_A	Operating free-air temperature	– 55	125	– 40	125	°C

(1) All unused inputs of the device must be held at V_{CC} or GND to ensure proper device operation. Refer to the TI Application Report, *Implications of Slow or Floating CMOS Inputs*, (SCBA004).

Copyright © 2024 Texas Instruments Incorporated

5.4 Thermal Information

THERMAL METRIC[1]		SN74AHCT04								UNIT
		D	DB	DGV	N	NS	PW	RGY	BQA	
		14 PINS								
$R_{\theta JA}$	Junction-to-ambient thermal resistance	124.5	113.1	138.7	61.1	120.9	147.7	63.7	88.3	°C/W
$R_{\theta JC(top)}$	Junction-to-case (top) thermal resistance	78.8	65.6	60.6	48.0	78.2	77.4	77.6	90.9	
$R_{\theta JB}$	Junction-to-board thermal resistance	81	60.4	71.8	41.0	81.6	90.9	39.7	56.8	
ψ_{JT}	Junction-to-top characterization parameter	37	25.5	10.6	32.4	42.8	27.2	5.7	9.9	
ψ_{JB}	Junction-to-board characterization parameter	80.6	59.9	71.1	40.9	81.1	90.2	39.9	56.7	
$R_{\theta JC(bot)}$	Junction-to-case (bottom) thermal resistance	N/A	N/A	N/A	N/A	N/A	N/A	19.9	33.4	

(1) For more information about traditional and new thermal metrics, see the *IC Package Thermal Metrics* application report, (SPRA953).

5.5 Electrical Characteristics

over recommended operating free-air temperature range (unless otherwise noted)

PARAMETER	TEST CONDITIONS	V_{CC}	T_A = 25°C			SN54AHCT04		SN74AHCT04		UNIT
			MIN	TYP	MAX	MIN	MAX	MIN	MAX	
V_{OH}	I_{OH} = –50 µA	4.5 V	4.4	4.5		4.4		4.4		V
	I_{OH} = –8 mA		3.94			3.8		3.8		
V_{OL}	I_{OL} = 50 µA	4.5 V			0.1		0.1		0.1	V
	I_{OL} = 8 mA				0.36		0.44		0.44	
I_I	V_I = 5.5 V or GND	0 V to 5.5 V			±0.1		±1[1]		±1	µA
I_{CC}	V_I = V_{CC} or GND, I_O = 0	5.5 V			2		20		20	µA
ΔI_{CC} [2]	One input at 3.4 V, Other inputs at V_{CC} or GND	5.5 V			1.35		1.5		1.5	mA
C_i	V_I = V_{CC} or GND	5 V		4	10				10	pF

(1) On products compliant to MIL-PRF-38535, this parameter is not production tested at V_{CC} = 0 V.
(2) This is the increase in supply current for each input at one of the specified TTL voltage levels, rather than 0 V or V_{CC}.

5.6 Switching Characteristics, V_{CC} = 5 V ± 0.5 V

over recommended operating free-air temperature range (unless otherwise noted) (see 图 6-1)

PARAMETER	FROM (INPUT)	TO (OUTPUT)	LOAD CAPACITANCE	T_A = 25°C			SN54AHCT04		SN74AHCT04		UNIT
				MIN	TYP	MAX	MIN	MAX	MIN	MAX	
t_{PLH}	A	Y	C_L = 15 pF		4.7[1]	6.7[1]	1[1]	7.5[1]	1	7.5	ns
t_{PHL}					4.7[1]	6.7[1]	1[1]	7.5[1]	1	7.5	
t_{PLH}	A	Y	C_L = 50 pF		5.5	7.7	1	8.5	1	8.5	ns
t_{PHL}					5.5	7.7	1	8.5	1	8.5	

(1) On products compliant to MIL-PRF-38535, this parameter is not production tested.

5.7 Noise Characteristics

V_{CC} = 5 V, C_L = 50 pF, T_A = 25°C[(1)]

PARAMETER		SN74AHCT04			UNIT
		MIN	TYP	MAX	
$V_{OL(P)}$	Quiet output, maximum dynamic V_{OL}		0.8		V
$V_{OL(V)}$	Quiet output, minimum dynamic V_{OL}		–0.8		V
$V_{OH(V)}$	Quiet output, minimum dynamic V_{OH}		4.7		V
$V_{IH(D)}$	High-level dynamic input voltage	2			V
$V_{IL(D)}$	Low-level dynamic input voltage			0.8	V

(1) Characteristics are for surface-mount packages only.

5.8 Operating Characteristics

V_{CC} = 5 V, T_A = 25°C

PARAMETER		TEST CONDITIONS		TYP	UNIT
C_{pd}	Power dissipation capacitance	No load,	f = 1 MHz	14	pF

5.9 Typical Characteristics

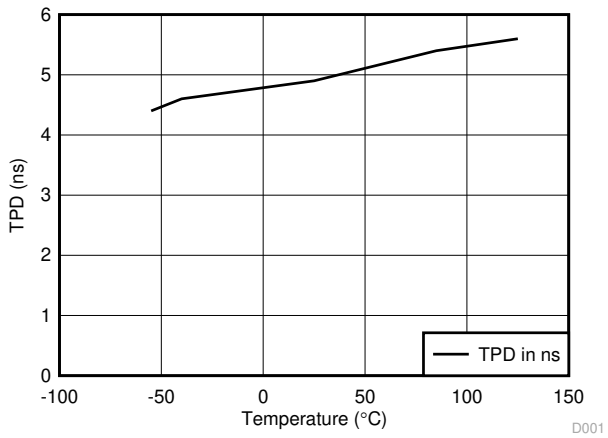

图 5-1. TPD vs Temperature

Copyright © 2024 Texas Instruments Incorporated

6 Parameter Measurement Information

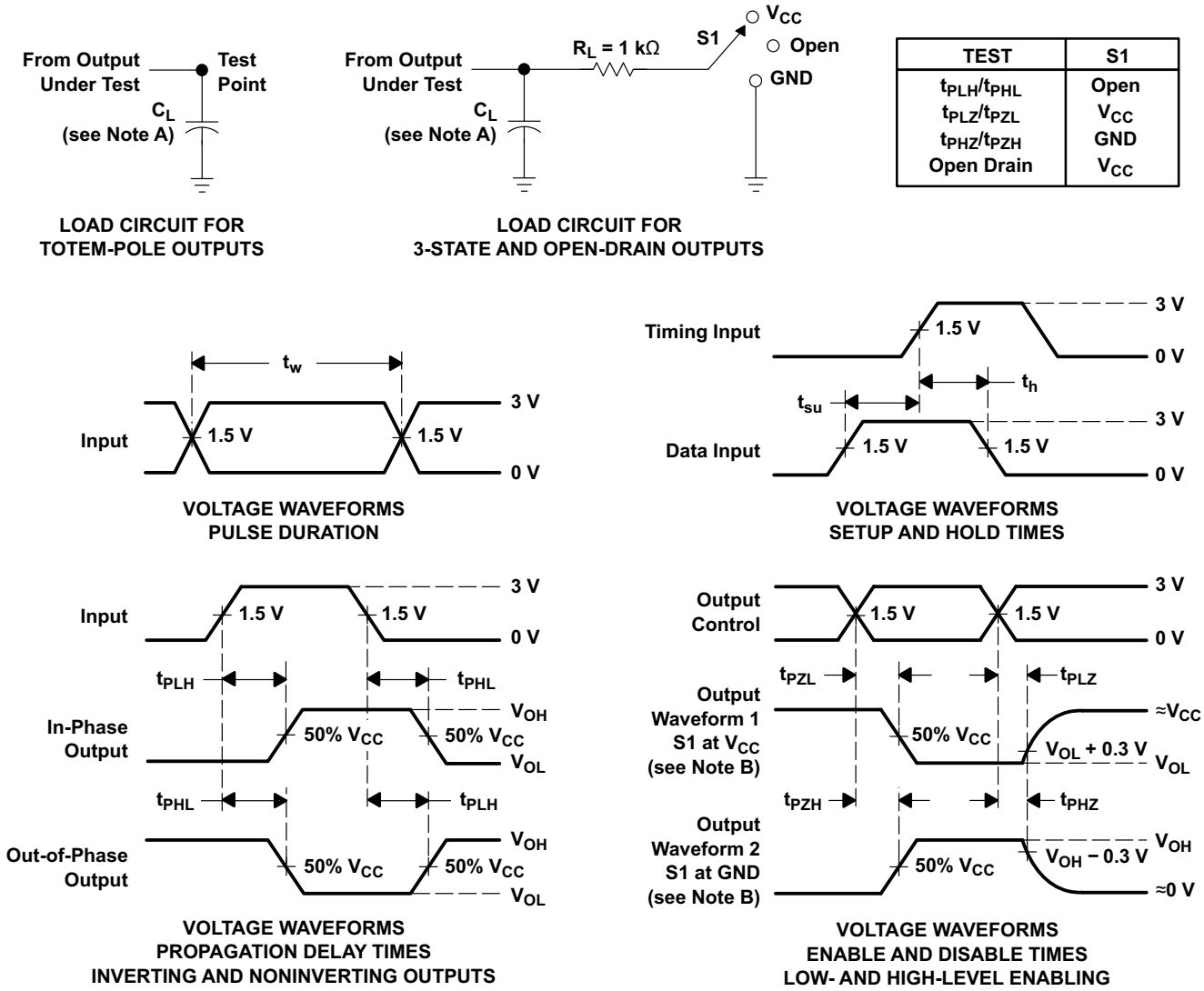

TEST	S1
t_{PLH}/t_{PHL}	Open
t_{PLZ}/t_{PZL}	V_{CC}
t_{PHZ}/t_{PZH}	GND
Open Drain	V_{CC}

NOTES: A. C_L includes probe and jig capacitance.
B. Waveform 1 is for an output with internal conditions such that the output is low except when disabled by the output control. Waveform 2 is for an output with internal conditions such that the output is high except when disabled by the output control.
C. All input pulses are supplied by generators having the following characteristics: PRR ≤ 1 MHz, Z_O = 50 Ω, t_r ≤ 3 ns, t_f ≤ 3 ns.
D. The outputs are measured one at a time with one input transition per measurement.
E. All parameters and waveforms are not applicable to all devices.

图 6-1. Load Circuit and Voltage Waveforms

7 Detailed Description

7.1 Overview

The SNx4AHCT04 devices contain six independent inverters. These devices have TTL input levels that allow up translation from 3.3 V to 5 V.

7.2 Functional Block Diagram

7.3 Feature Description

- V_{CC} is optimized at 5 V
- Allows up voltage translation from 3.3 V to 5 V
  - Inputs Accept V_{IH} levels of 2 V
- Slow edge rates minimize output ringing
- Inputs are TTL-voltage compatible

7.4 Device Functional Modes

表 7-1. Function Table (Each Inverter)

INPUT A	OUTPUT Y
H	L
L	H

Copyright © 2024 Texas Instruments Incorporated

8 Application and Implementation

备注

以下应用部分中的信息不属于 TI 器件规格的范围，TI 不担保其准确性和完整性。TI 的客 户应负责确定器件是否适用于其应用。客户应验证并测试其设计，以确保系统功能。

8.1 Application Information

The SNx4AHCT04 is a low-drive CMOS device that can be used for a multitude of inverting type applications where output ringing is a concern. The low drive and slow edge rates will minimize overshoot and undershoot on the outputs. The input switching levels have been lowered to accommodate TTL inputs of 0.8-V V_{IL} and 2-V V_{IH}. This feature makes it ideal for translating up from 3.3 V to 5 V. 图 8-1 and 图 8-2 show this type of translation.

8.2 Typical Application

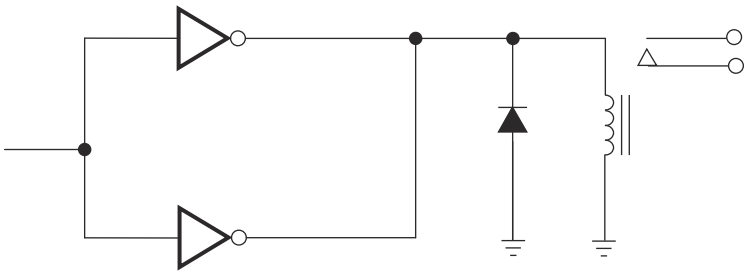

图 8-1. Driving Relays

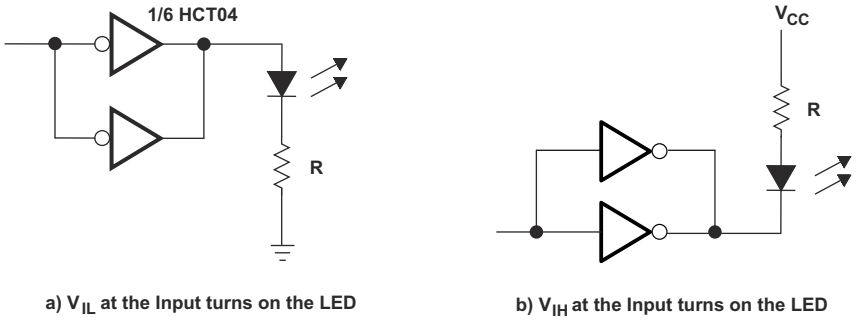

图 8-2. Driving LEDs

8.2.1 Design Requirements

This device uses CMOS technology and has balanced output drive. Care should be taken to avoid bus contention because it can drive currents that would exceed maximum limits. The high drive will also create fast edges into light loads, so routing and load conditions should be considered to prevent ringing.

8.2.2 Detailed Design Procedure

1. Recommended input conditions
   - Rise time and fall time specs: See ($\Delta t/\Delta V$) in the *Recommended Operating Conditions* table.
   - Specified High and low levels: See (V_{IH} and V_{IL}) in the *Recommended Operating Conditions* table.
2. Recommend output conditions
   - Load currents should not exceed 25 mA per output and 50 mA total for the part
   - Outputs should not be pulled above V_{CC}

8.2.3 Application Curves

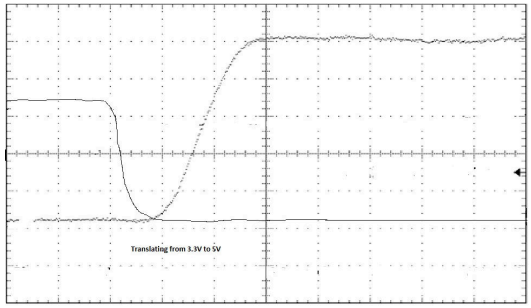

图 8-3. Up Translation

8.3 Power Supply Recommendations

The power supply can be any voltage between the MIN and MAX supply voltage rating located in the *Recommended Operating Conditions* table.

Each V_{CC} pin should have a good bypass capacitor to prevent power disturbance. For devices with a single supply, 0.1 μF is recommended. If there are multiple V_{CC} pins, 0.01 μF or 0.022 μF is recommended for each power pin. It is acceptable to parallel multiple bypass caps to reject different frequencies of noise. A 0.1 μF and 1 μF are commonly used in parallel. The bypass capacitor should be installed as close to the power pin as possible for best results.

8.4 Layout

8.4.1 Layout Guidelines

When using multiple bit logic devices inputs should not ever float.

In many cases, functions or parts of functions of digital logic devices are unused, for example, when only two inputs of a triple-input AND gate are used or only 3 of the 4 buffer gates are used. Such input pins should not be left unconnected because the undefined voltages at the outside connections result in undefined operational states. #none# shows the rules that must be observed under all circumstances. All unused inputs of digital logic devices must be connected to a high or low bias to prevent them from floating. The logic level that should be applied to any particular unused input depends on the function of the device. Generally they will be tied to GND or V_{CC}; whichever makes more sense or is more convenient. It is generally acceptable to float outputs unless the part is a transceiver. If the transceiver has an output enable pin, it will disable the outputs section of the part when asserted. This will not disable the input section of the IOs, so they cannot float when disabled.

Copyright © 2024 Texas Instruments Incorporated

8.4.2 Layout Example

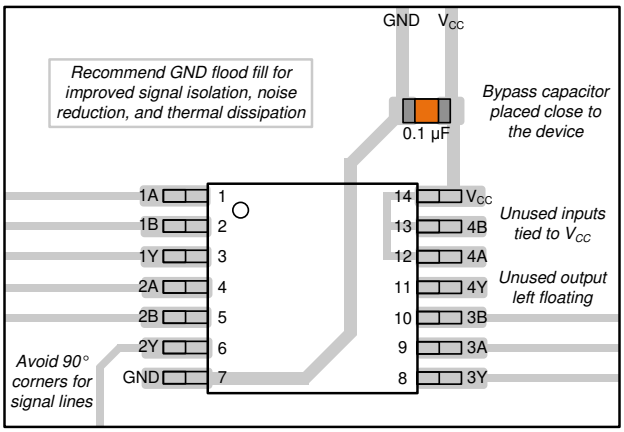

图 8-4. Example Layout for the SN74AHCT04

9 Device and Documentation Support

9.1 Documentation Support (Analog)

9.1.1 Related Documentation

The table below lists quick access links. Categories include technical documents, support and community resources, tools and software, and quick access to sample or buy.

表 9-1. Related Links

PARTS	PRODUCT FOLDER	SAMPLE & BUY	TECHNICAL DOCUMENTS	TOOLS & SOFTWARE	SUPPORT & COMMUNITY
SN54AHCT04	Click here	Click here	Click here	Click here	Click here
SN74AHCT04	Click here	Click here	Click here	Click here	Click here

9.2 接收文档更新通知

要接收文档更新通知，请导航至 ti.com 上的器件产品文件夹。点击*通知* 进行注册，即可每周接收产品信息更改摘要。有关更改的详细信息，请查看任何已修订文档中包含的修订历史记录。

9.3 支持资源

TI E2E™ 中文支持论坛是工程师的重要参考资料，可直接从专家处获得快速、经过验证的解答和设计帮助。搜索现有解答或提出自己的问题，获得所需的快速设计帮助。

链接的内容由各个贡献者“按原样”提供。这些内容并不构成 TI 技术规范，并且不一定反映 TI 的观点；请参阅 TI 的使用条款。

9.4 Trademarks

TI E2E™ is a trademark of Texas Instruments.
所有商标均为其各自所有者的财产。

9.5 静电放电警告

静电放电 (ESD) 会损坏这个集成电路。德州仪器 (TI) 建议通过适当的预防措施处理所有集成电路。如果不遵守正确的处理和安装程序，可能会损坏集成电路。

ESD 的损坏小至导致微小的性能降级，大至整个器件故障。精密的集成电路可能更容易受到损坏，这是因为非常细微的参数更改都可能会导致器件与其发布的规格不相符。

9.6 术语表

TI 术语表　　本术语表列出并解释了术语、首字母缩略词和定义。

10 Revision History

注：以前版本的页码可能与当前版本的页码不同

Changes from Revision Q (October 2023) to Revision R (February 2024) — **Page**

- Updated thermal values for NS package from R θ JA = 98.6 to 120.9, R θ JC(top) = 54.1 to 78.2, R θ JB = 57.4 to 81.6, Ψ JT = 19.6 to 42.8, Ψ JB = 57.0 to 81.1, R θ JC(bot) = N/A, all values in °C/W 5

Changes from Revision P (May 2023) to Revision Q (October 2023) — **Page**

- Updated R θ JA values: D = 101.2 to 124.5, PW = 129.9 to 147.7; Updated D and PW packages for R θ JC(top), R θ JB, Ψ JT, Ψ JB, and R θ JC(bot), all values in °C/W..... 5

Copyright © 2024 Texas Instruments Incorporated

11 Mechanical, Packaging, and Orderable Information

The following pages include mechanical, packaging, and orderable information. This information is the most current data available for the designated devices. This data is subject to change without notice and revision of this document. For browser-based versions of this data sheet, refer to the left-hand navigation.

PACKAGING INFORMATION

Orderable part number	Status (1)	Material type (2)	Package | Pins	Package qty | Carrier	RoHS (3)	Lead finish/ Ball material (4)	MSL rating/ Peak reflow (5)	Op temp (°C)	Part marking (6)
5962-9680401Q2A	Active	Production	LCCC (FK) | 20	55 | TUBE	No	SNPB	N/A for Pkg Type	-55 to 125	5962-9680401Q2A SNJ54AHCT 04FK
5962-9680401QCA	Active	Production	CDIP (J) | 14	25 | TUBE	No	SNPB	N/A for Pkg Type	-55 to 125	5962-9680401QC A SNJ54AHCT04J
5962-9680401QDA	Active	Production	CFP (W) | 14	25 | TUBE	No	SNPB	N/A for Pkg Type	-55 to 125	5962-9680401QD A SNJ54AHCT04W
SN74AHCT04BQAR	Active	Production	WQFN (BQA) | 14	3000 | LARGE T&R	Yes	SN	Level-1-260C-UNLIM	-40 to 125	AHCT04
SN74AHCT04BQAR.A	Active	Production	WQFN (BQA) | 14	3000 | LARGE T&R	Yes	SN	Level-1-260C-UNLIM	-40 to 125	AHCT04
SN74AHCT04D	Obsolete	Production	SOIC (D) | 14	-	-	Call TI	Call TI	-40 to 125	AHCT04
SN74AHCT04DBR	Active	Production	SSOP (DB) | 14	2000 | LARGE T&R	Yes	NIPDAU	Level-1-260C-UNLIM	-40 to 125	HB04
SN74AHCT04DBR.A	Active	Production	SSOP (DB) | 14	2000 | LARGE T&R	Yes	NIPDAU	Level-1-260C-UNLIM	-40 to 125	HB04
SN74AHCT04DGVR	Active	Production	TVSOP (DGV) | 14	2000 | LARGE T&R	Yes	NIPDAU	Level-1-260C-UNLIM	-40 to 125	HB04
SN74AHCT04DGVR.A	Active	Production	TVSOP (DGV) | 14	2000 | LARGE T&R	Yes	NIPDAU	Level-1-260C-UNLIM	-40 to 125	HB04
SN74AHCT04DR	Active	Production	SOIC (D) | 14	2500 | LARGE T&R	Yes	NIPDAU	Level-1-260C-UNLIM	-40 to 125	AHCT04
SN74AHCT04DR.A	Active	Production	SOIC (D) | 14	2500 | LARGE T&R	Yes	NIPDAU	Level-1-260C-UNLIM	-40 to 125	AHCT04
SN74AHCT04N	NRND	Production	PDIP (N) | 14	25 | TUBE	Yes	NIPDAU	N/A for Pkg Type	-40 to 125	SN74AHCT04N
SN74AHCT04N.A	NRND	Production	PDIP (N) | 14	25 | TUBE	Yes	NIPDAU	N/A for Pkg Type	-40 to 125	SN74AHCT04N
SN74AHCT04NSR	Active	Production	SOP (NS) | 14	2000 | LARGE T&R	Yes	NIPDAU	Level-1-260C-UNLIM	-40 to 125	AHCT04
SN74AHCT04NSR.A	Active	Production	SOP (NS) | 14	2000 | LARGE T&R	Yes	NIPDAU	Level-1-260C-UNLIM	-40 to 125	AHCT04
SN74AHCT04PW	Obsolete	Production	TSSOP (PW) | 14	-	-	Call TI	Call TI	-40 to 125	HB04
SN74AHCT04PWR	Active	Production	TSSOP (PW) | 14	2000 | LARGE T&R	Yes	NIPDAU | SN	Level-1-260C-UNLIM	-40 to 125	HB04
SN74AHCT04PWR.A	Active	Production	TSSOP (PW) | 14	2000 | LARGE T&R	Yes	NIPDAU	Level-1-260C-UNLIM	-40 to 125	HB04
SN74AHCT04RGYR	Last Time Buy	Production	VQFN (RGY) | 14	3000 | LARGE T&R	Yes	NIPDAU	Level-2-260C-1 YEAR	-40 to 125	HB04
SN74AHCT04RGYR.A	Last Time Buy	Production	VQFN (RGY) | 14	3000 | LARGE T&R	Yes	NIPDAU	Level-2-260C-1 YEAR	-40 to 125	HB04
SN74AHCT04RGYRG4	Last Time Buy	Production	VQFN (RGY) | 14	3000 | LARGE T&R	Yes	NIPDAU	Level-2-260C-1 YEAR	-40 to 125	HB04

Orderable part number	Status (1)	Material type (2)	Package | Pins	Package qty | Carrier	RoHS (3)	Lead finish/ Ball material (4)	MSL rating/ Peak reflow (5)	Op temp (°C)	Part marking (6)
SNJ54AHCT04FK	Active	Production	LCCC (FK) | 20	55 | TUBE	No	SNPB	N/A for Pkg Type	-55 to 125	5962-9680401Q2A SNJ54AHCT 04FK
SNJ54AHCT04FK.A	Active	Production	LCCC (FK) | 20	55 | TUBE	No	SNPB	N/A for Pkg Type	-55 to 125	5962-9680401Q2A SNJ54AHCT 04FK
SNJ54AHCT04J	Active	Production	CDIP (J) | 14	25 | TUBE	No	SNPB	N/A for Pkg Type	-55 to 125	5962-9680401QC A SNJ54AHCT04J
SNJ54AHCT04J.A	Active	Production	CDIP (J) | 14	25 | TUBE	No	SNPB	N/A for Pkg Type	-55 to 125	5962-9680401QC A SNJ54AHCT04J
SNJ54AHCT04W	Active	Production	CFP (W) | 14	25 | TUBE	No	SNPB	N/A for Pkg Type	-55 to 125	5962-9680401QD A SNJ54AHCT04W
SNJ54AHCT04W.A	Active	Production	CFP (W) | 14	25 | TUBE	No	SNPB	N/A for Pkg Type	-55 to 125	5962-9680401QD A SNJ54AHCT04W

(1) **Status:** For more details on status, see our product life cycle.

(2) **Material type:** When designated, preproduction parts are prototypes/experimental devices, and are not yet approved or released for full production. Testing and final process, including without limitation quality assurance, reliability performance testing, and/or process qualification, may not yet be complete, and this item is subject to further changes or possible discontinuation. If available for ordering, purchases will be subject to an additional waiver at checkout, and are intended for early internal evaluation purposes only. These items are sold without warranties of any kind.

(3) **RoHS values:** Yes, No, RoHS Exempt. See the TI RoHS Statement for additional information and value definition.

(4) **Lead finish/Ball material:** Parts may have multiple material finish options. Finish options are separated by a vertical ruled line. Lead finish/Ball material values may wrap to two lines if the finish value exceeds the maximum column width.

(5) **MSL rating/Peak reflow:** The moisture sensitivity level ratings and peak solder (reflow) temperatures. In the event that a part has multiple moisture sensitivity ratings, only the lowest level per JEDEC standards is shown. Refer to the shipping label for the actual reflow temperature that will be used to mount the part to the printed circuit board.

(6) **Part marking:** There may be an additional marking, which relates to the logo, the lot trace code information, or the environmental category of the part.

Multiple part markings will be inside parentheses. Only one part marking contained in parentheses and separated by a "~" will appear on a part. If a line is indented then it is a continuation of the previous line and the two combined represent the entire part marking for that device.

Important Information and Disclaimer: The information provided on this page represents TI's knowledge and belief as of the date that it is provided. TI bases its knowledge and belief on information provided by third parties, and makes no representation or warranty as to the accuracy of such information. Efforts are underway to better integrate information from third parties. TI has taken and continues to take reasonable steps to provide representative and accurate information but may not have conducted destructive testing or chemical analysis on incoming materials and chemicals. TI and TI suppliers consider certain information to be proprietary, and thus CAS numbers and other limited information may not be available for release.

In no event shall TI's liability arising out of such information exceed the total purchase price of the TI part(s) at issue in this document sold by TI to Customer on an annual basis.

OTHER QUALIFIED VERSIONS OF SN54AHCT04, SN74AHCT04 :

- Catalog : SN74AHCT04
- Military : SN54AHCT04

NOTE: Qualified Version Definitions:

- Catalog - TI's standard catalog product
- Military - QML certified for Military and Defense Applications

TAPE AND REEL INFORMATION

REEL DIMENSIONS

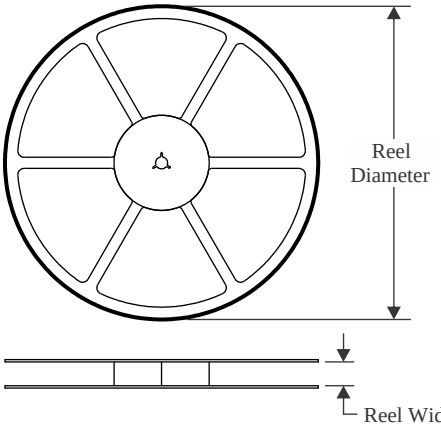

TAPE DIMENSIONS

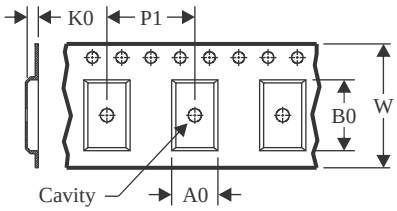

A0	Dimension designed to accommodate the component width
B0	Dimension designed to accommodate the component length
K0	Dimension designed to accommodate the component thickness
W	Overall width of the carrier tape
P1	Pitch between successive cavity centers

QUADRANT ASSIGNMENTS FOR PIN 1 ORIENTATION IN TAPE

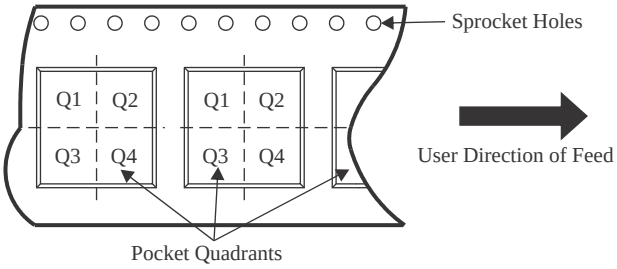

*All dimensions are nominal

Device	Package Type	Package Drawing	Pins	SPQ	Reel Diameter (mm)	Reel Width W1 (mm)	A0 (mm)	B0 (mm)	K0 (mm)	P1 (mm)	W (mm)	Pin1 Quadrant
SN74AHCT04BQAR	WQFN	BQA	14	3000	180.0	12.4	2.8	3.3	1.1	4.0	12.0	Q1
SN74AHCT04DBR	SSOP	DB	14	2000	330.0	16.4	8.35	6.6	2.4	12.0	16.0	Q1
SN74AHCT04DGVR	TVSOP	DGV	14	2000	330.0	12.4	6.8	4.0	1.6	8.0	12.0	Q1
SN74AHCT04DR	SOIC	D	14	2500	330.0	16.4	6.5	9.0	2.1	8.0	16.0	Q1
SN74AHCT04DR	SOIC	D	14	2500	330.0	16.4	6.5	9.0	2.1	8.0	16.0	Q1
SN74AHCT04DR	SOIC	D	14	2500	330.0	16.4	6.5	9.0	2.1	8.0	16.0	Q1
SN74AHCT04NSR	SOP	NS	14	2000	330.0	16.4	8.45	10.55	2.5	12.0	16.2	Q1
SN74AHCT04NSR	SOP	NS	14	2000	330.0	16.4	8.1	10.4	2.5	12.0	16.0	Q1
SN74AHCT04PWR	TSSOP	PW	14	2000	330.0	12.4	6.9	5.6	1.6	8.0	12.0	Q1
SN74AHCT04RGYR	VQFN	RGY	14	3000	330.0	12.4	3.75	3.75	1.15	8.0	12.0	Q1

TAPE AND REEL BOX DIMENSIONS

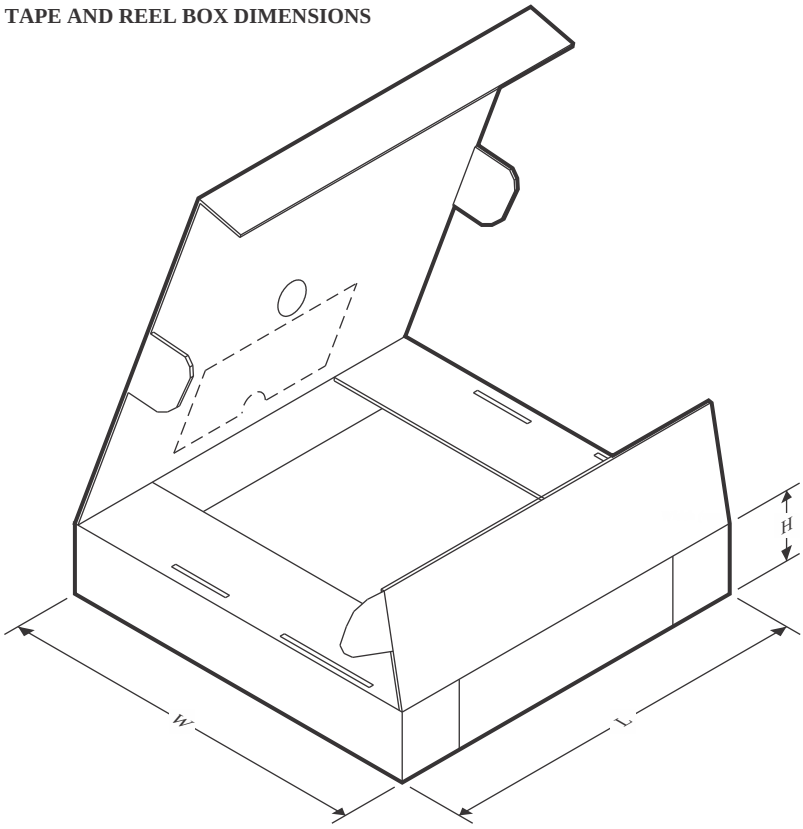

*All dimensions are nominal

Device	Package Type	Package Drawing	Pins	SPQ	Length (mm)	Width (mm)	Height (mm)
SN74AHCT04BQAR	WQFN	BQA	14	3000	210.0	185.0	35.0
SN74AHCT04DBR	SSOP	DB	14	2000	353.0	353.0	32.0
SN74AHCT04DGVR	TVSOP	DGV	14	2000	353.0	353.0	32.0
SN74AHCT04DR	SOIC	D	14	2500	333.2	345.9	28.6
SN74AHCT04DR	SOIC	D	14	2500	353.0	353.0	32.0
SN74AHCT04DR	SOIC	D	14	2500	353.0	353.0	32.0
SN74AHCT04NSR	SOP	NS	14	2000	353.0	353.0	32.0
SN74AHCT04NSR	SOP	NS	14	2000	353.0	353.0	32.0
SN74AHCT04PWR	TSSOP	PW	14	2000	353.0	353.0	32.0
SN74AHCT04RGYR	VQFN	RGY	14	3000	353.0	353.0	32.0

TUBE

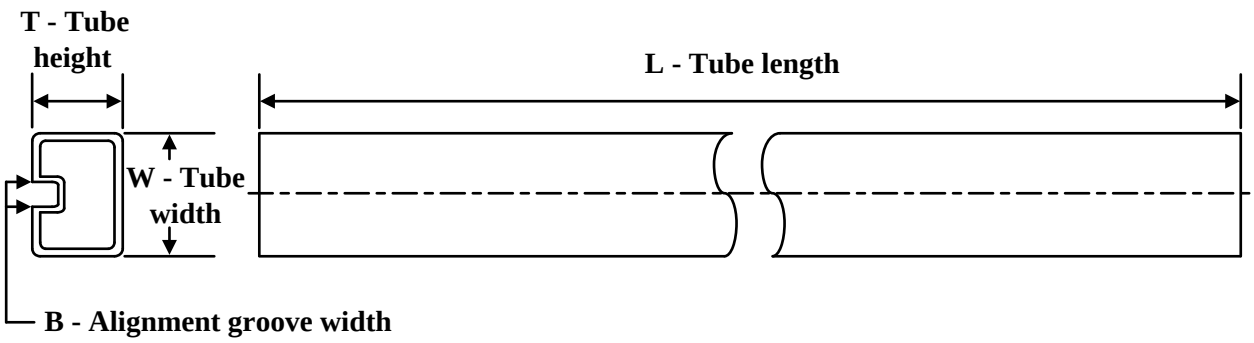

*All dimensions are nominal

Device	Package Name	Package Type	Pins	SPQ	L (mm)	W (mm)	T (µm)	B (mm)
5962-9680401Q2A	FK	LCCC	20	55	506.98	12.06	2030	NA
5962-9680401QDA	W	CFP	14	25	506.98	26.16	6220	NA
SN74AHCT04N	N	PDIP	14	25	506	13.97	11230	4.32
SN74AHCT04N	N	PDIP	14	25	506	13.97	11230	4.32
SN74AHCT04N.A	N	PDIP	14	25	506	13.97	11230	4.32
SN74AHCT04N.A	N	PDIP	14	25	506	13.97	11230	4.32
SNJ54AHCT04FK	FK	LCCC	20	55	506.98	12.06	2030	NA
SNJ54AHCT04FK.A	FK	LCCC	20	55	506.98	12.06	2030	NA
SNJ54AHCT04W	W	CFP	14	25	506.98	26.16	6220	NA
SNJ54AHCT04W.A	W	CFP	14	25	506.98	26.16	6220	NA

W (R–GDFP–F14) CERAMIC DUAL FLATPACK

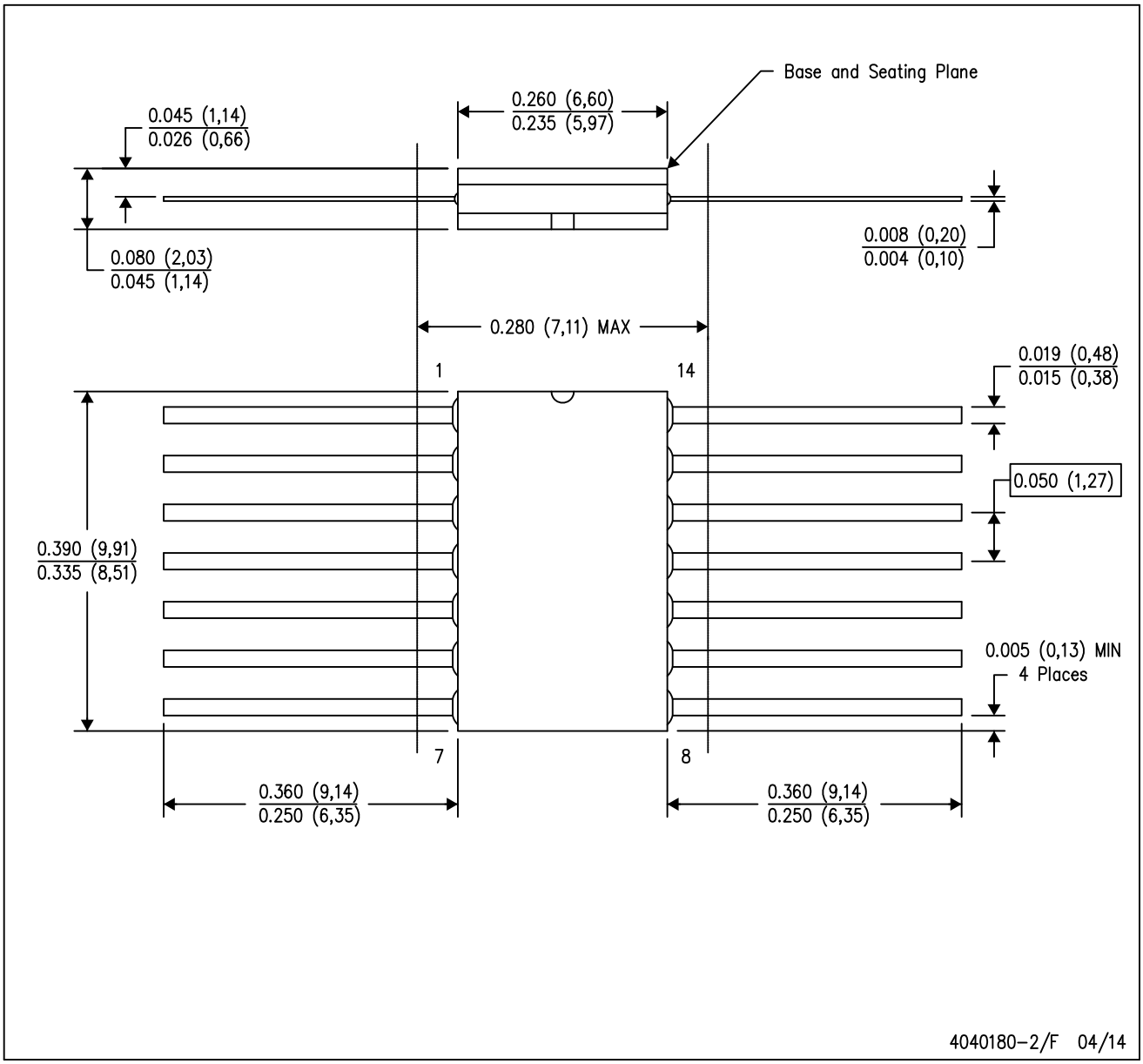

NOTES:
A. All linear dimensions are in inches (millimeters).
B. This drawing is subject to change without notice.
C. This package can be hermetically sealed with a ceramic lid using glass frit.
D. Index point is provided on cap for terminal identification only.
E. Falls within MIL STD 1835 GDFP1–F14

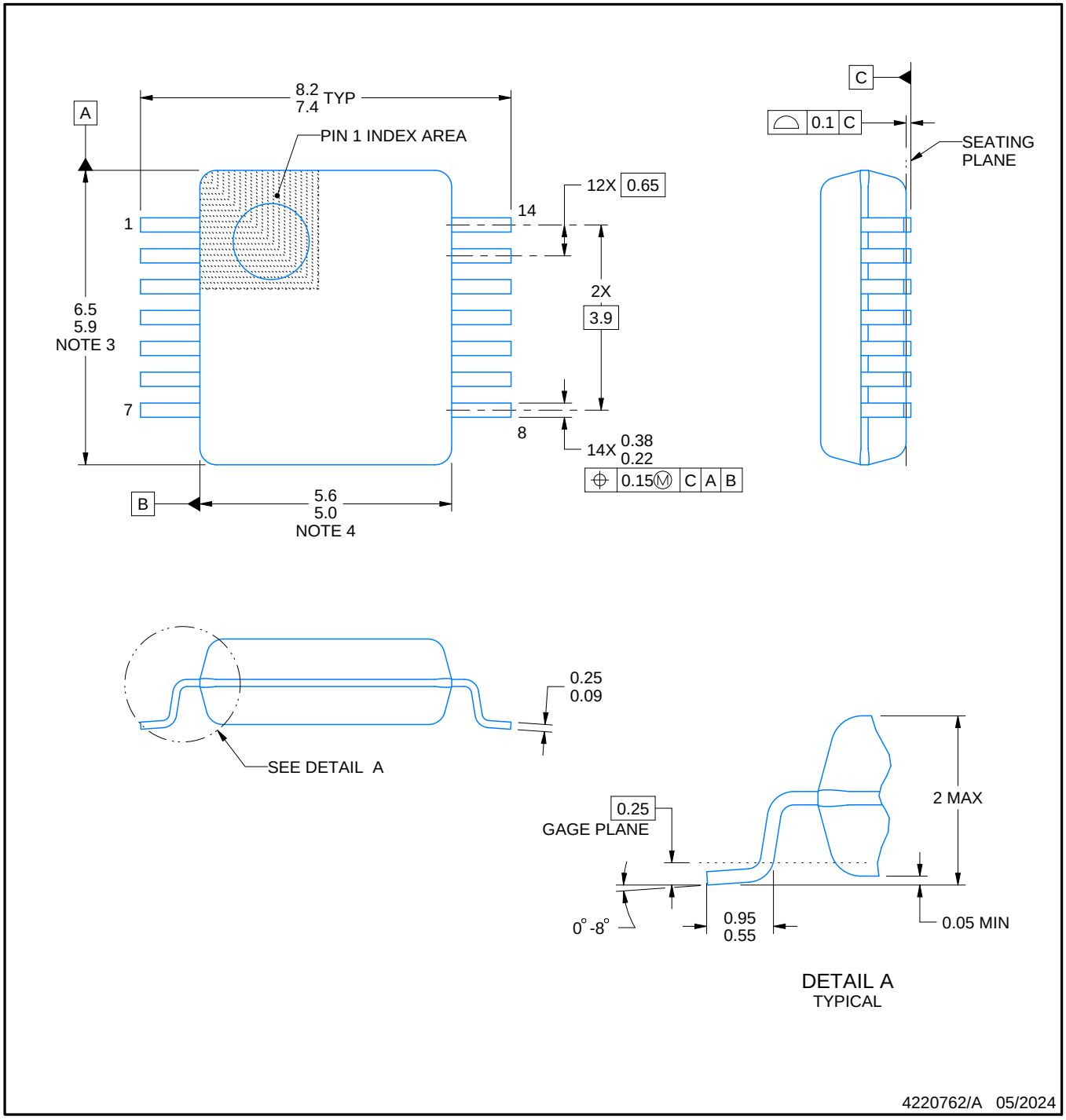

NOTES:

1. All linear dimensions are in millimeters. Any dimensions in parenthesis are for reference only. Dimensioning and tolerancing per ASME Y14.5M.
2. This drawing is subject to change without notice.
3. This dimension does not include mold flash, protrusions, or gate burrs. Mold flash, protrusions, or gate burrs shall not exceed 0.15 mm per side.
4. Reference JEDEC registration MO-150.

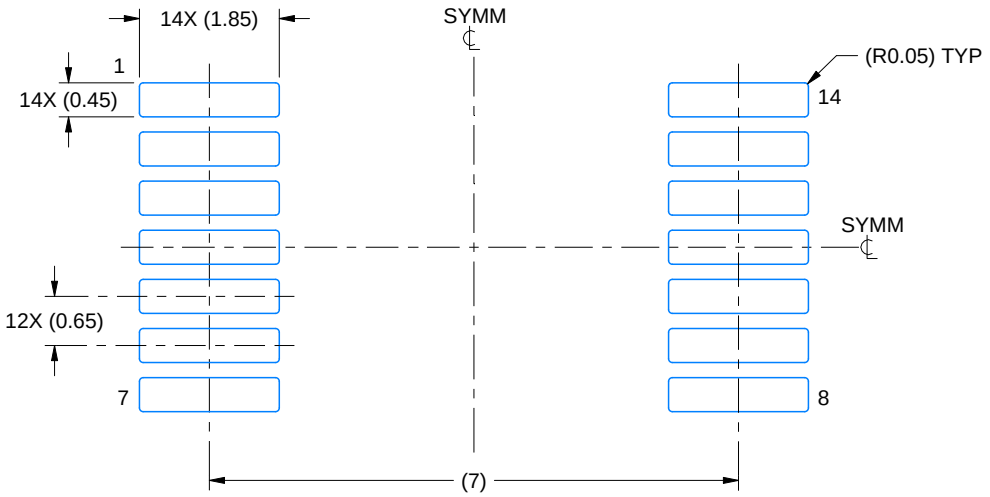

LAND PATTERN EXAMPLE
EXPOSED METAL SHOWN
SCALE: 10X

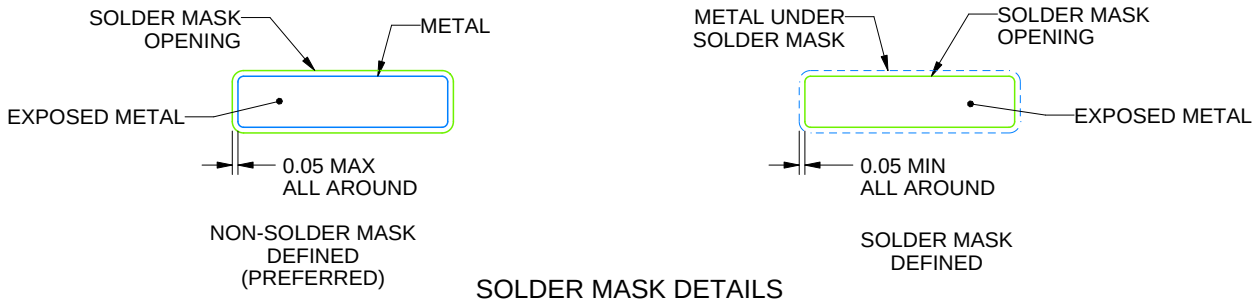

SOLDER MASK DETAILS

4220762/A 05/2024

NOTES: (continued)

5. Publication IPC-7351 may have alternate designs.
6. Solder mask tolerances between and around signal pads can vary based on board fabrication site.

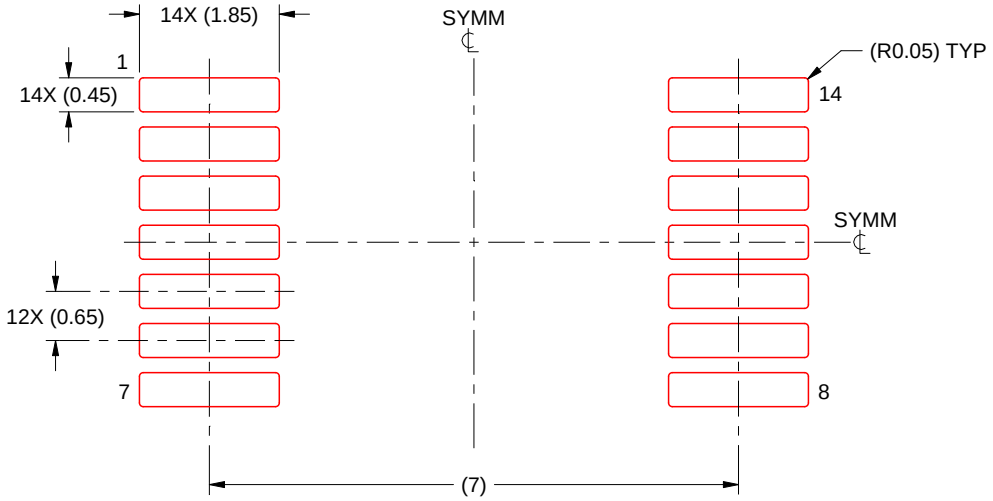

SOLDER PASTE EXAMPLE
BASED ON 0.125 mm THICK STENCIL
SCALE: 10X

4220762/A 05/2024

NOTES: (continued)

7. Laser cutting apertures with trapezoidal walls and rounded corners may offer better paste release. IPC-7525 may have alternate design recommendations.
8. Board assembly site may have different recommendations for stencil design.

GENERIC PACKAGE VIEW

FK 20

LCCC - 2.03 mm max height

8.89 x 8.89, 1.27 mm pitch

LEADLESS CERAMIC CHIP CARRIER

This image is a representation of the package family, actual package may vary.
Refer to the product data sheet for package details.

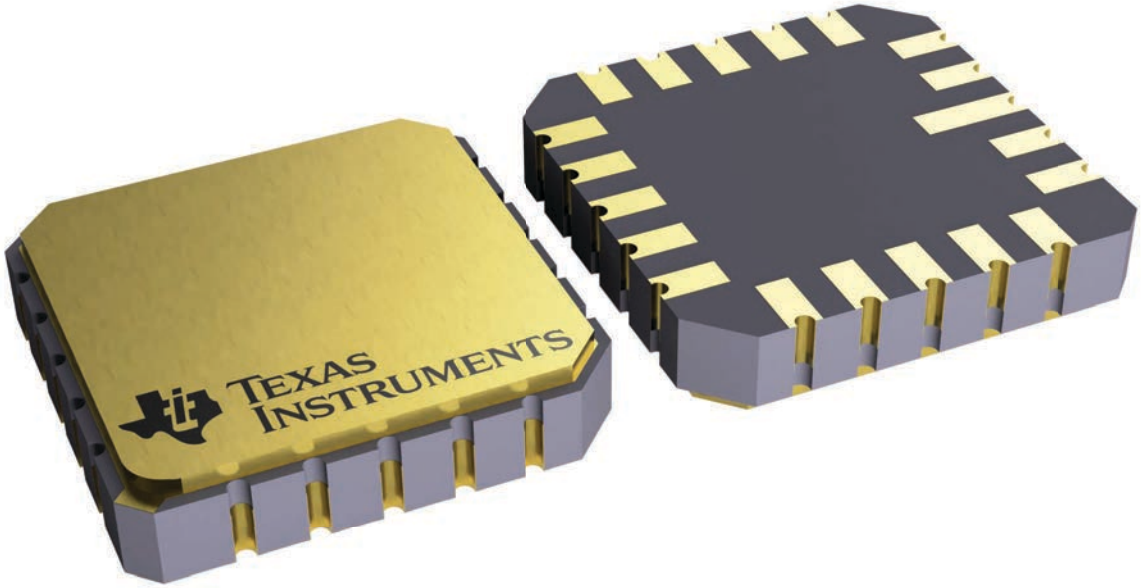

4229370VA\

J 14 CDIP - 5.08 mm max height

CERAMIC DUAL IN LINE PACKAGE

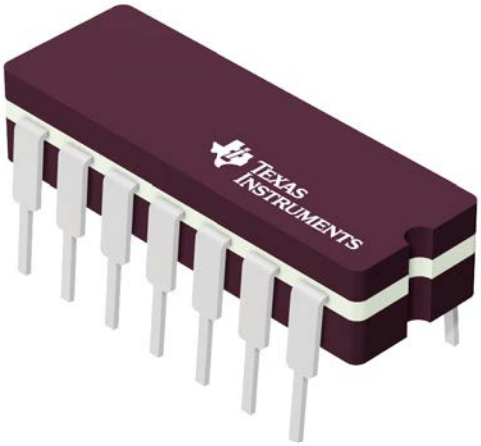

Images above are just a representation of the package family, actual package may vary.
Refer to the product data sheet for package details.

4040083-5/G

PACKAGE OUTLINE

J0014A

CDIP - 5.08 mm max height

CERAMIC DUAL IN LINE PACKAGE

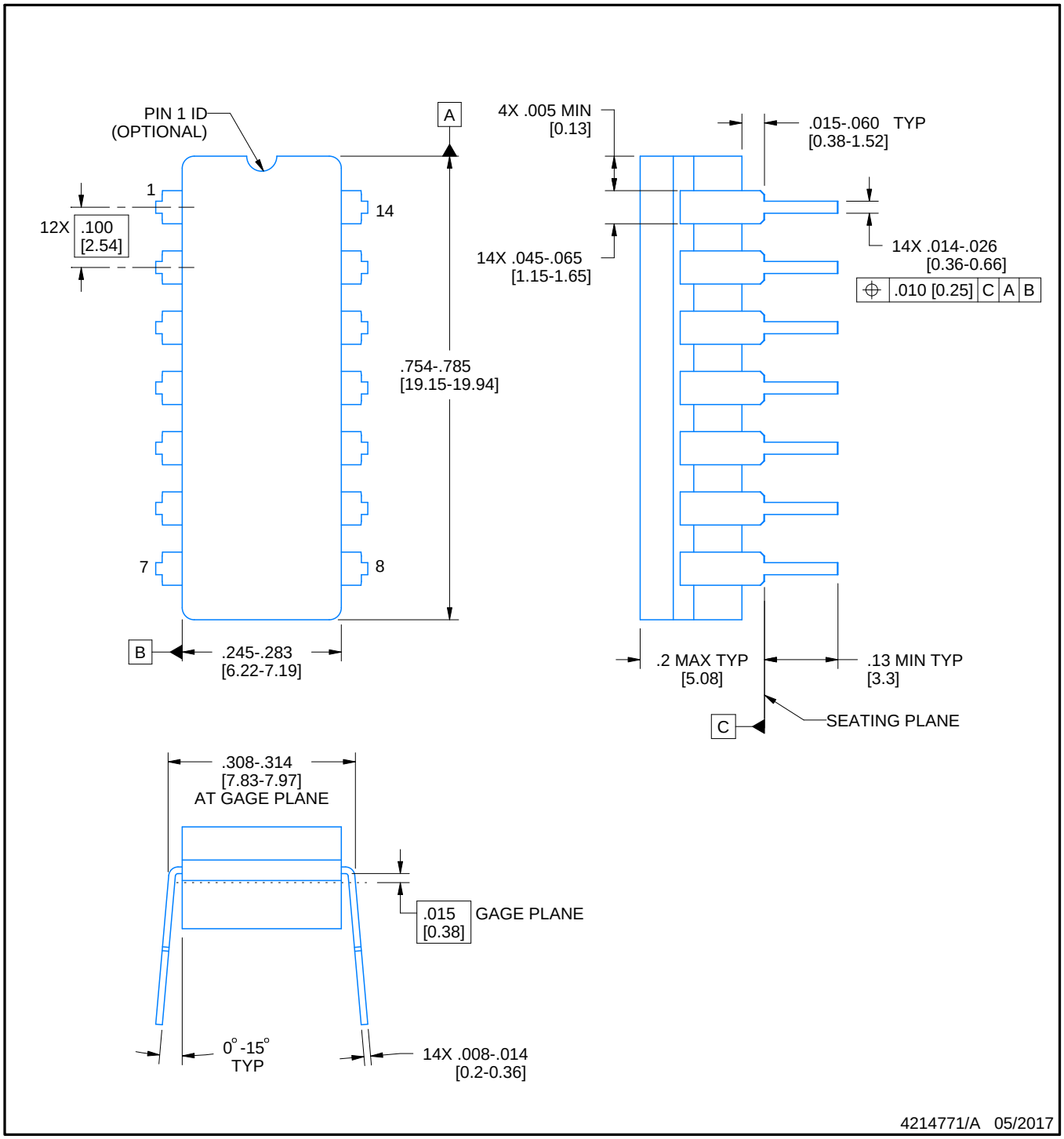

NOTES:

1. All controlling linear dimensions are in inches. Dimensions in brackets are in millimeters. Any dimension in brackets or parenthesis are for reference only. Dimensioning and tolerancing per ASME Y14.5M.
2. This drawing is subject to change without notice.
3. This package is hermitically sealed with a ceramic lid using glass frit.
4. Index point is provided on cap for terminal identification only and on press ceramic glass frit seal only.
5. Falls within MIL-STD-1835 and GDIP1-T14.

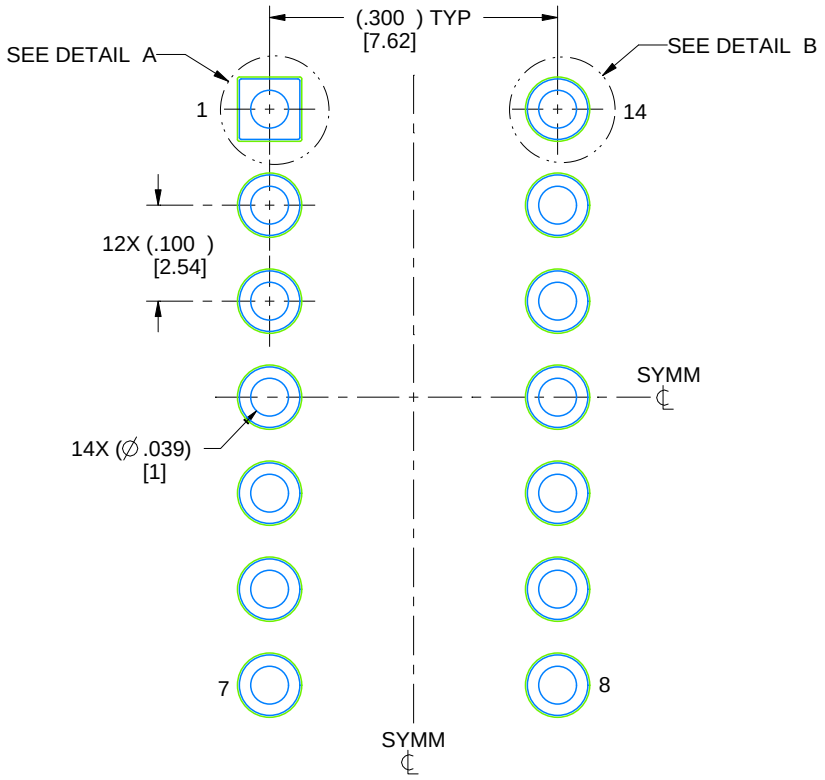

LAND PATTERN EXAMPLE
NON-SOLDER MASK DEFINED
SCALE: 5X

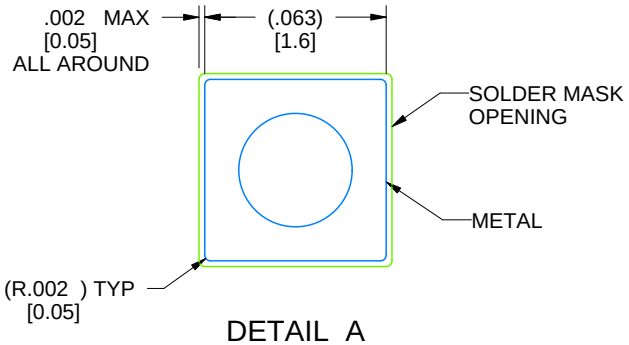

DETAIL A
SCALE: 15X

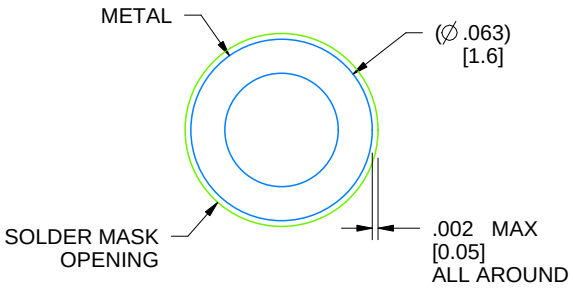

DETAIL B
13X, SCALE: 15X

4214771/A 05/2017

N (R–PDIP–T**) PLASTIC DUAL–IN–LINE PACKAGE

16 PINS SHOWN

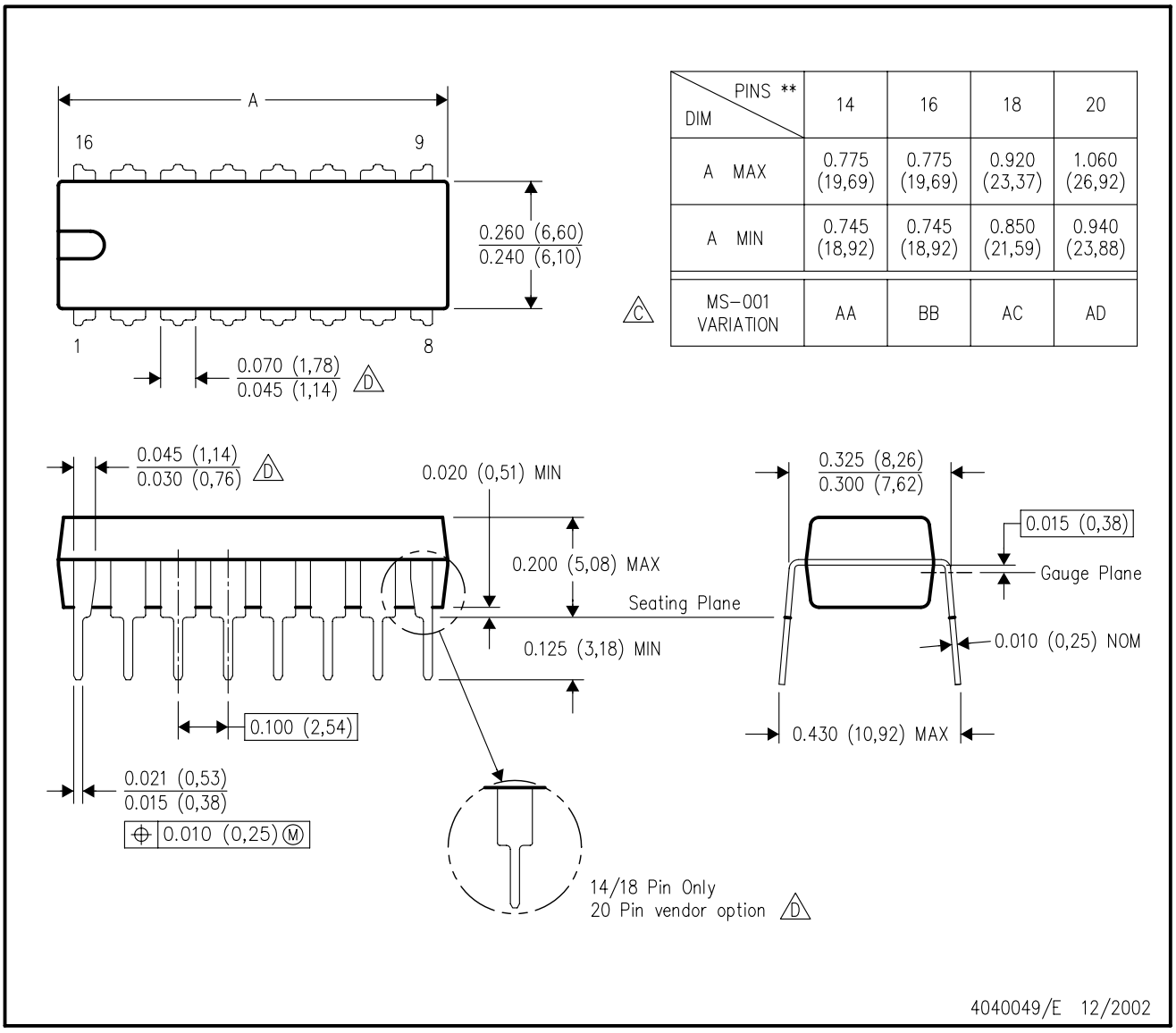

DIM \ PINS **	14	16	18	20
A MAX	0.775 (19,69)	0.775 (19,69)	0.920 (23,37)	1.060 (26,92)
A MIN	0.745 (18,92)	0.745 (18,92)	0.850 (21,59)	0.940 (23,88)
MS–001 VARIATION (C)	AA	BB	AC	AD

NOTES:
A. All linear dimensions are in inches (millimeters).
B. This drawing is subject to change without notice.
C. Falls within JEDEC MS–001, except 18 and 20 pin minimum body length (Dim A).
D. The 20 pin end lead shoulder width is a vendor option, either half or full width.

PW0014A

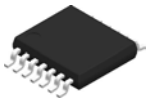

PACKAGE OUTLINE

TSSOP - 1.2 mm max height

SMALL OUTLINE PACKAGE

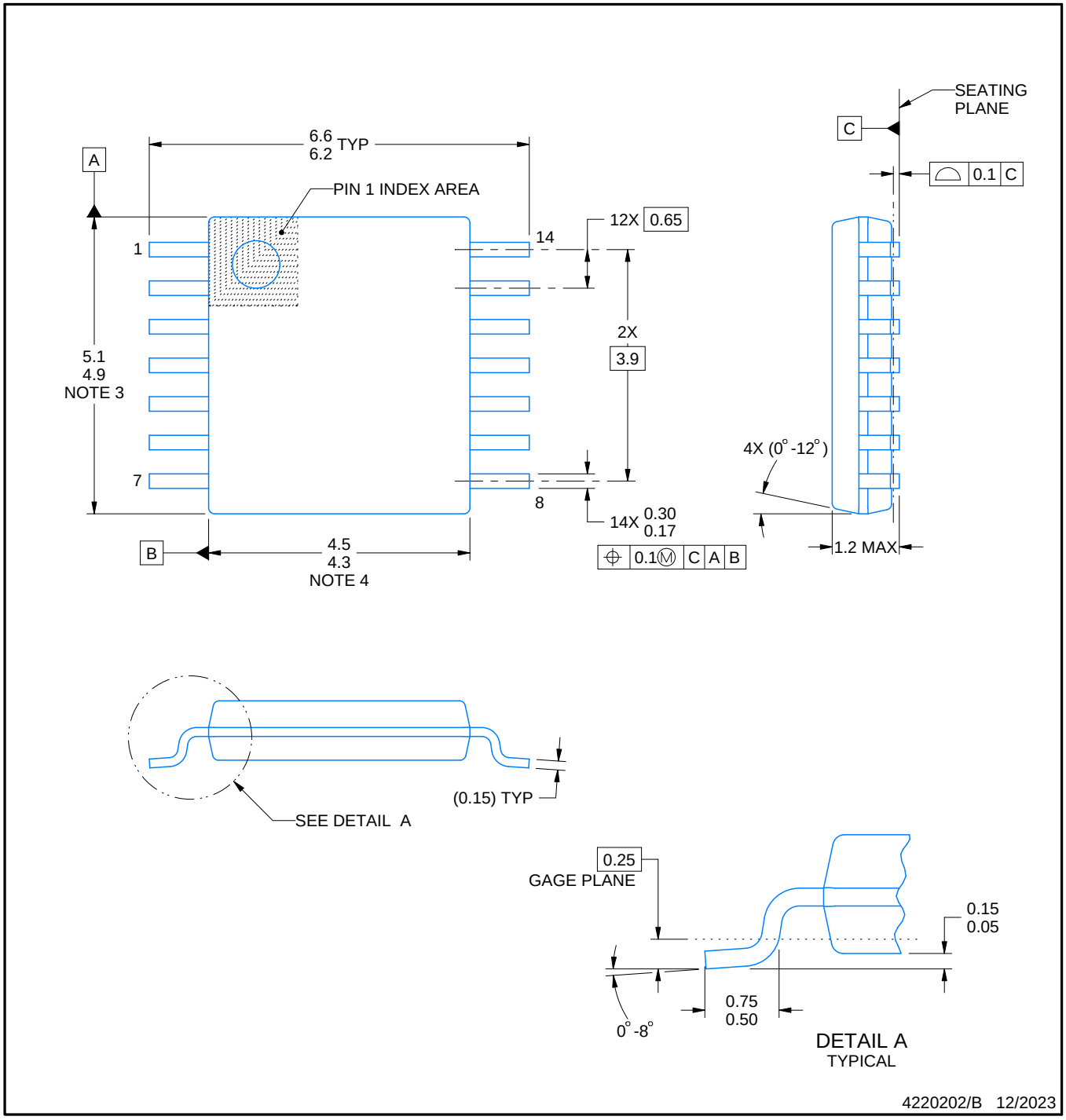

NOTES:

1. All linear dimensions are in millimeters. Any dimensions in parenthesis are for reference only. Dimensioning and tolerancing per ASME Y14.5M.
2. This drawing is subject to change without notice.
3. This dimension does not include mold flash, protrusions, or gate burrs. Mold flash, protrusions, or gate burrs shall not exceed 0.15 mm per side.
4. This dimension does not include interlead flash. Interlead flash shall not exceed 0.25 mm per side.
5. Reference JEDEC registration MO-153.

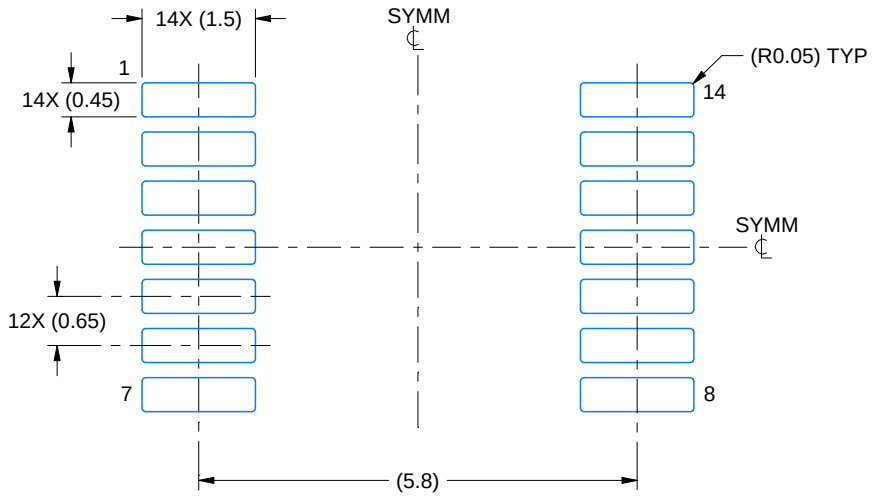

LAND PATTERN EXAMPLE
EXPOSED METAL SHOWN
SCALE: 10X

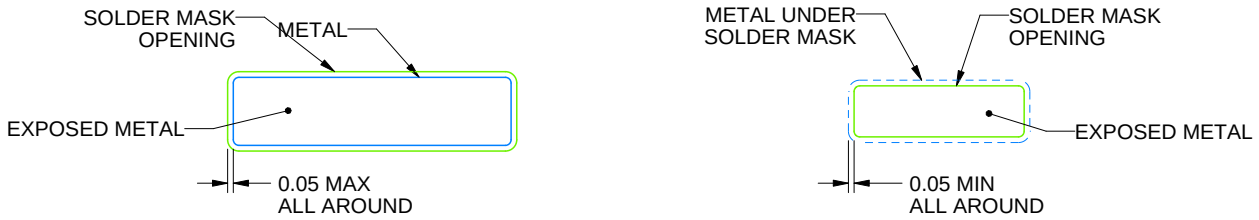

NON-SOLDER MASK DEFINED (PREFERRED)

SOLDER MASK DEFINED

SOLDER MASK DETAILS

4220202/B 12/2023

NOTES: (continued)

6. Publication IPC-7351 may have alternate designs.
7. Solder mask tolerances between and around signal pads can vary based on board fabrication site.

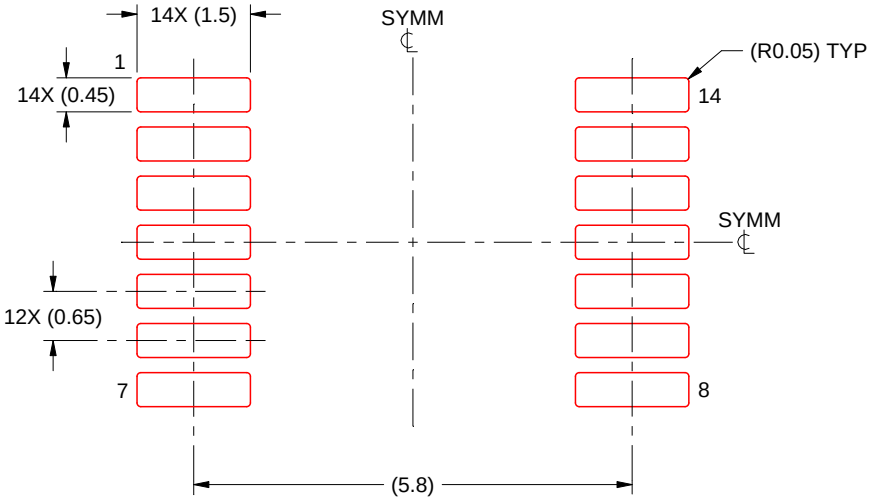

SOLDER PASTE EXAMPLE
BASED ON 0.125 mm THICK STENCIL
SCALE: 10X

4220202/B 12/2023

NOTES: (continued)

8. Laser cutting apertures with trapezoidal walls and rounded corners may offer better paste release. IPC-7525 may have alternate design recommendations.
9. Board assembly site may have different recommendations for stencil design.

GENERIC PACKAGE VIEW

RGY 14

VQFN - 1 mm max height

3.5 x 3.5, 0.5 mm pitch

PLASTIC QUAD FLATPACK - NO LEAD

This image is a representation of the package family, actual package may vary.
Refer to the product data sheet for package details.

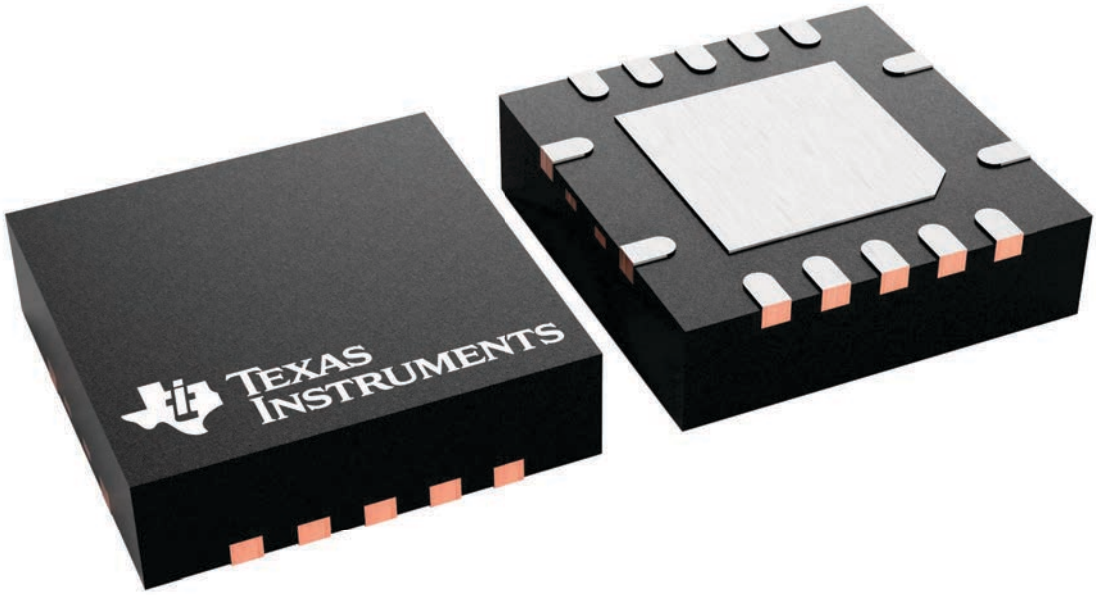

4231541/A

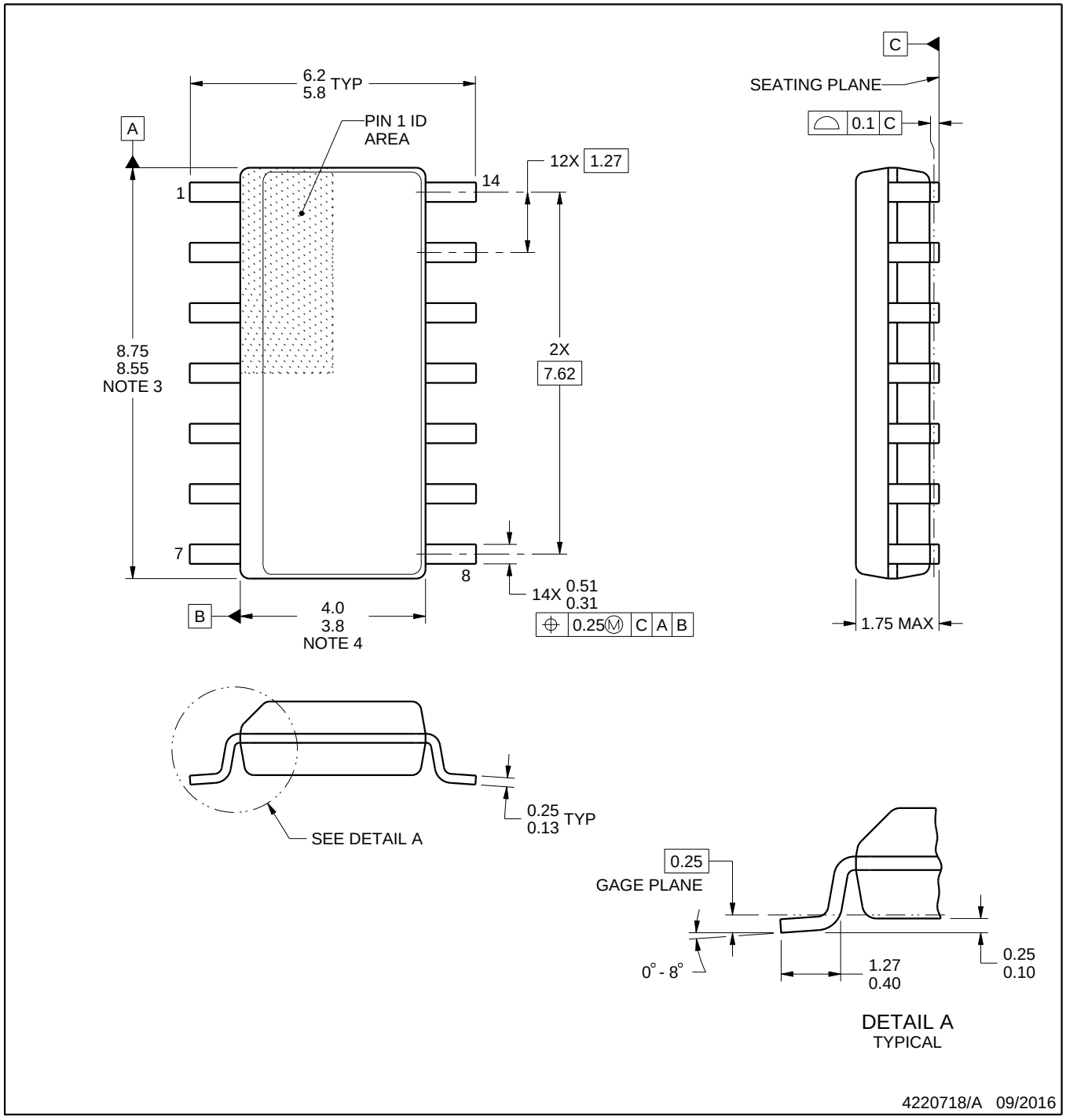

NOTES:

1. All linear dimensions are in millimeters. Dimensions in parenthesis are for reference only. Dimensioning and tolerancing per ASME Y14.5M.
2. This drawing is subject to change without notice.
3. This dimension does not include mold flash, protrusions, or gate burrs. Mold flash, protrusions, or gate burrs shall not exceed 0.15 mm, per side.
4. This dimension does not include interlead flash. Interlead flash shall not exceed 0.43 mm, per side.
5. Reference JEDEC registration MS-012, variation AB.

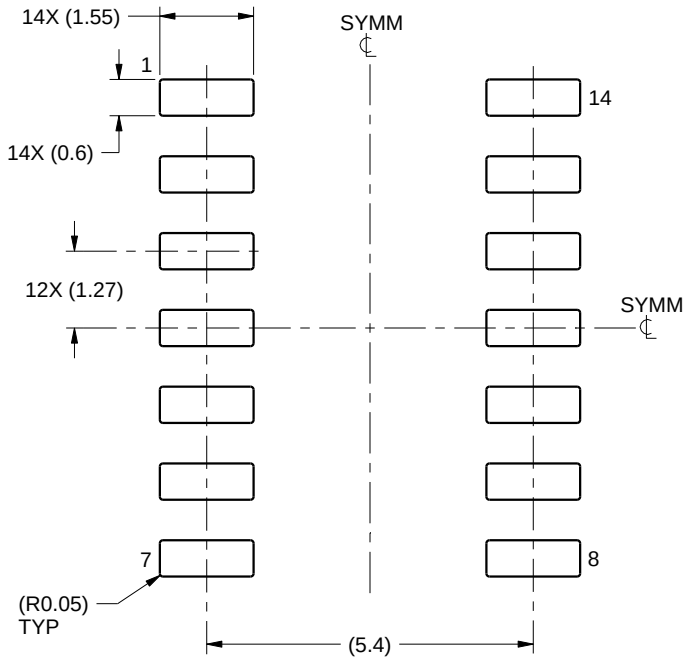

LAND PATTERN EXAMPLE
SCALE:8X

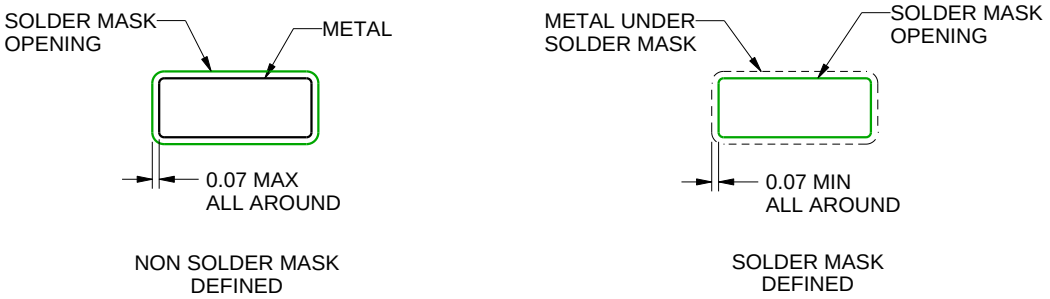

SOLDER MASK DETAILS

4220718/A 09/2016

NOTES: (continued)

6. Publication IPC-7351 may have alternate designs.
7. Solder mask tolerances between and around signal pads can vary based on board fabrication site.

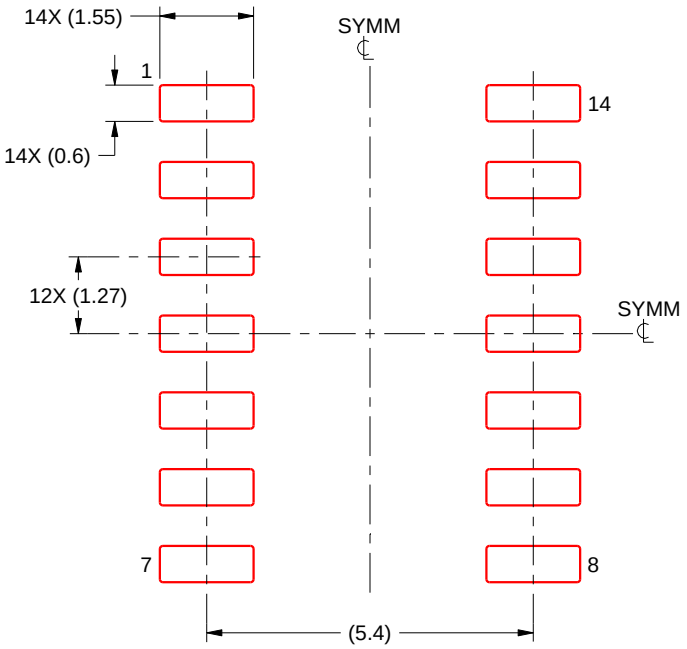

SOLDER PASTE EXAMPLE
BASED ON 0.125 mm THICK STENCIL
SCALE:8X

4220718/A 09/2016

NOTES: (continued)

8. Laser cutting apertures with trapezoidal walls and rounded corners may offer better paste release. IPC-7525 may have alternate design recommendations.
9. Board assembly site may have different recommendations for stencil design.

GENERIC PACKAGE VIEW

BQA 14

WQFN - 0.8 mm max height

2.5 x 3, 0.5 mm pitch

PLASTIC QUAD FLATPACK - NO LEAD

This image is a representation of the package family, actual package may vary.
Refer to the product data sheet for package details.

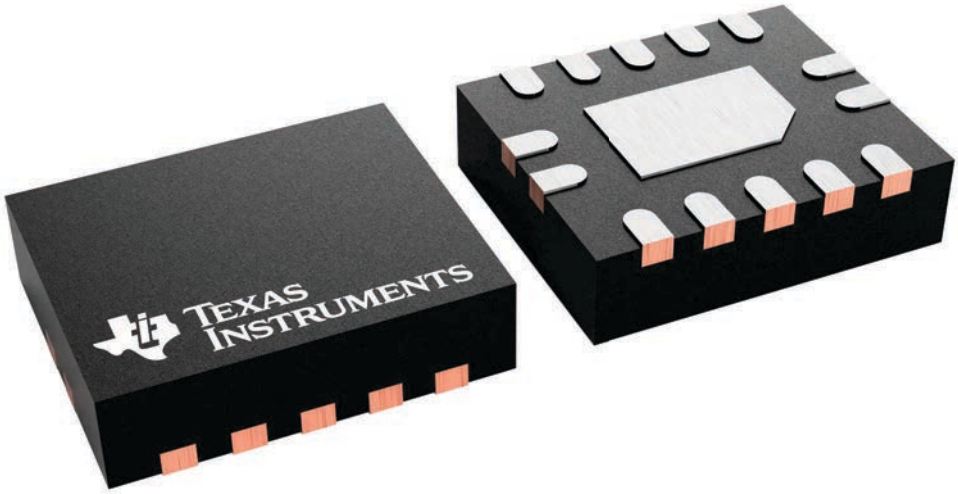

4227145/A

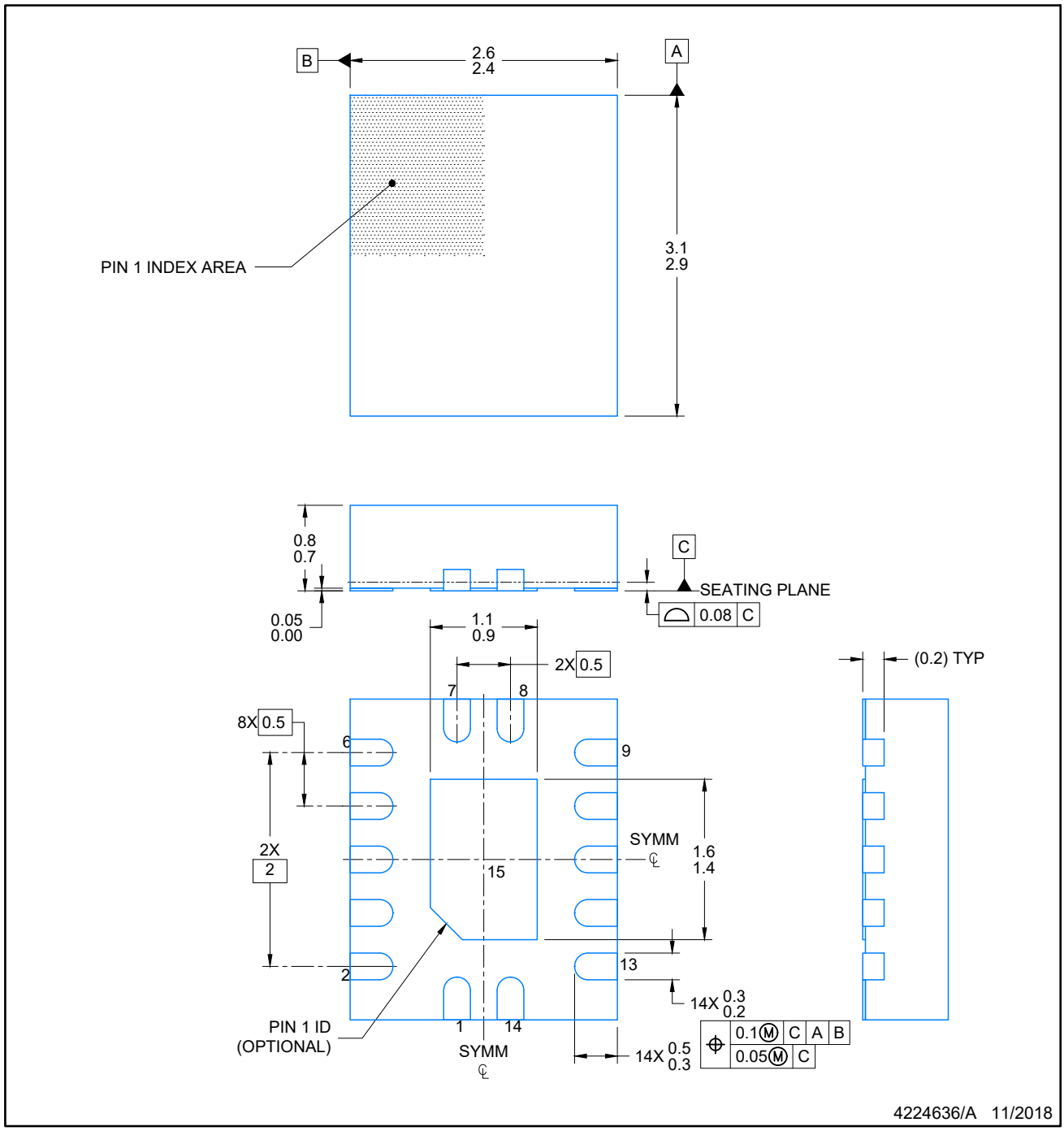

NOTES:

1. All linear dimensions are in millimeters. Any dimensions in parenthesis are for reference only. Dimensioning and tolerancing per ASME Y14.5M.
2. This drawing is subject to change without notice.
3. The package thermal pad must be soldered to the printed circuit board for optimal thermal and mechanical performance.

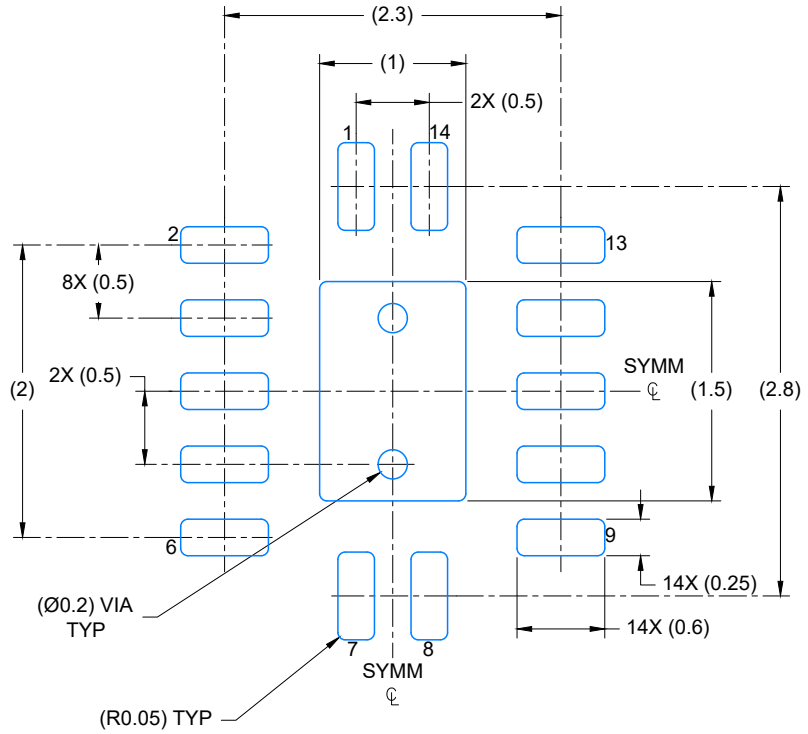

LAND PATTERN EXAMPLE
EXPOSED METAL SHOWN
SCALE: 20X

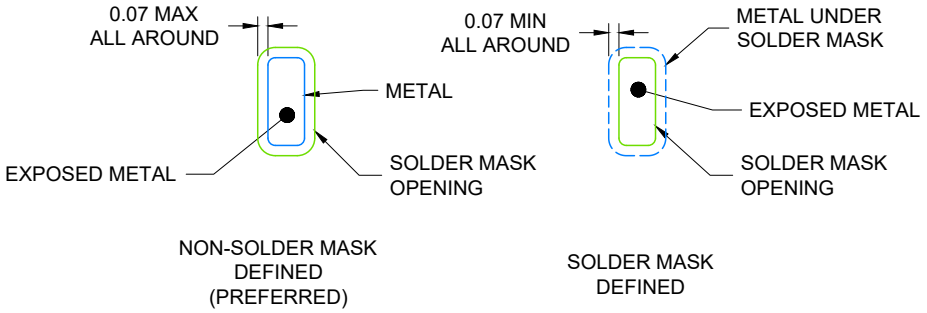

4224636/A 11/2018

NOTES: (continued)

4. This package is designed to be soldered to a thermal pad on the board. For more information, see Texas Instruments literature number SLUA271 (www.ti.com/lit/slua271).
5. Vias are optional depending on application, refer to device data sheet. If any vias are implemented, refer to their locations shown on this view. It is recommended that vias under paste be filled, plugged or tented.

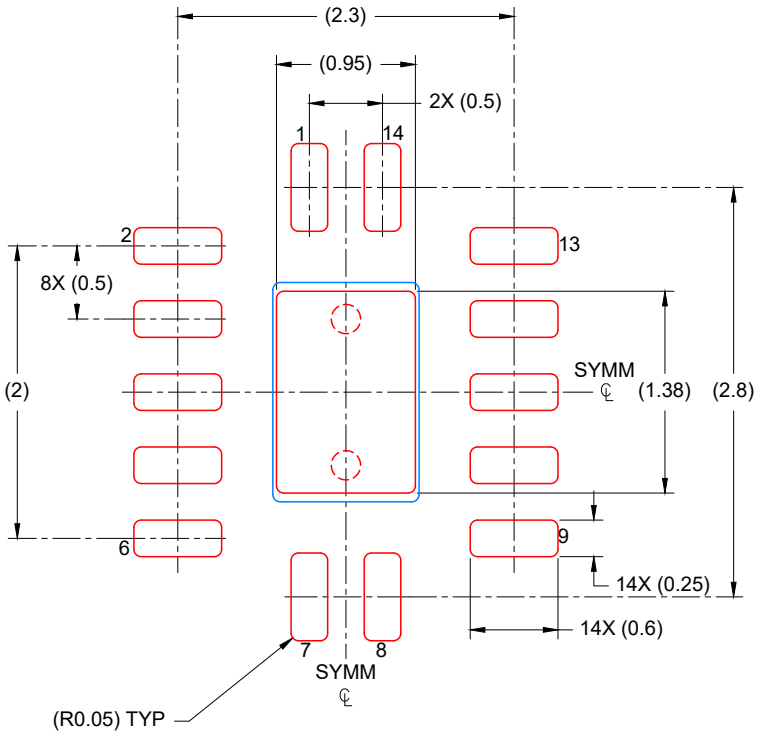

SOLDER PASTE EXAMPLE
BASED ON 0.125 mm THICK STENCIL

EXPOSED PAD
88% PRINTED COVERAGE BY AREA
SCALE: 20X

4224636/A 11/2018

NOTES: (continued)

6. Laser cutting apertures with trapezoidal walls and rounded corners may offer better paste release. IPC-7525 may have alternate design recommendations.

MECHANICAL DATA

NS (R-PDSO-G)** **PLASTIC SMALL-OUTLINE PACKAGE**

14-PINS SHOWN

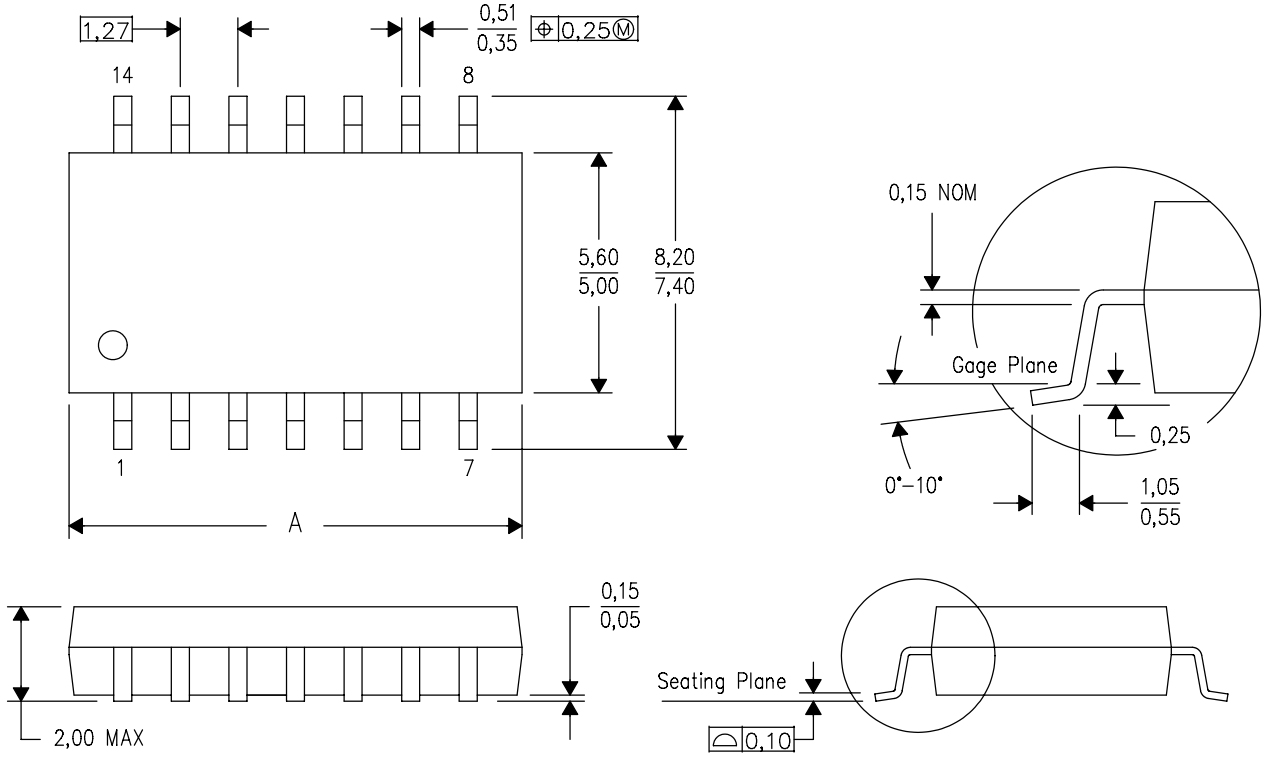

DIM \ PINS **	14	16	20	24
A MAX	10,50	10,50	12,90	15,30
A MIN	9,90	9,90	12,30	14,70

4040062/C 03/03

NOTES:
A. All linear dimensions are in millimeters.
B. This drawing is subject to change without notice.
C. Body dimensions do not include mold flash or protrusion, not to exceed 0,15.

重要通知和免责声明

TI“按原样”提供技术和可靠性数据（包括数据表）、设计资源（包括参考设计）、应用或其他设计建议、网络工具、安全信息和其他资源，不保证没有瑕疵且不做出任何明示或暗示的担保，包括但不限于对适销性、与某特定用途的适用性或不侵犯任何第三方知识产权的暗示担保。

这些资源可供使用 TI 产品进行设计的熟练开发人员使用。您将自行承担以下全部责任：(1) 针对您的应用选择合适的 TI 产品，(2) 设计、验证并测试您的应用，(3) 确保您的应用满足相应标准以及任何其他安全、安保法规或其他要求。

这些资源如有变更，恕不另行通知。TI 授权您仅可将这些资源用于研发本资源所述的 TI 产品的相关应用。严禁以其他方式对这些资源进行复制或展示。您无权使用任何其他 TI 知识产权或任何第三方知识产权。对于因您对这些资源的使用而对 TI 及其代表造成的任何索赔、损害、成本、损失和债务，您将全额赔偿，TI 对此概不负责。

TI 提供的产品受 TI 销售条款)、TI 通用质量指南 或 ti.com 上其他适用条款或 TI 产品随附的其他适用条款的约束。TI 提供这些资源并不会扩展或以其他方式更改 TI 针对 TI 产品发布的适用的担保或担保免责声明。 除非德州仪器 (TI) 明确将某产品指定为定制产品或客户特定产品，否则其产品均为按确定价格收入目录的标准通用器件。

TI 反对并拒绝您可能提出的任何其他或不同的条款。

版权所有 © 2026，德州仪器 (TI) 公司

最后更新日期：2025 年 10 月