SNx4AC374 具有三态输出的八路边沿触发式 D 型触发器

1 特性

- 工作范围为 2V 至 6V V_{CC}
- 输入电压高达 6V
- 电压为 5V 时，t_{pd} 最大值为 9.5ns
- 三态同相输出直接驱动总线
- 支持全并行加载访问

2 说明

这些 8 位触发器具有专门设计用于驱动高电容或相对低阻抗负载的三态输出。这些器件特别适用于实现缓冲寄存器、I/O 端口、双向总线驱动器和工作寄存器。

器件信息

器件型号	封装(1)	封装尺寸(2)	本体尺寸(3)
SNx4AC374	DB（SSOP，20）	7.2mm x 7.8mm	7.2mm x 5.30mm
	DW（SOIC，20）	12.80mm x 10.3mm	12.80mm x 7.50mm
	N（PDIP，20）	24.33mm x 9.4mm	24.33mm x 6.35mm
	NS（SOP，20）	12.6mm x 7.8mm	12.6mm x 5.3mm
	PW（TSSOP，20）	6.50mm x 6.4mm	6.50mm x 4.40mm

(1) 有关更多信息，请参阅第 10 节。
(2) 封装尺寸（长 × 宽）为标称值，并包括引脚（如适用）。
(3) 本体尺寸（长 × 宽）为标称值，不包括引脚。

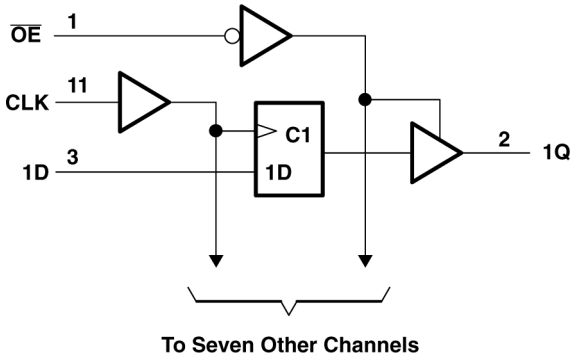

逻辑图（正逻辑）

本资源的原文使用英文撰写。 为方便起见，TI 提供了译文；由于翻译过程中可能使用了自动化工具，TI 不保证译文的准确性。 为确认准确性，请务必访问 ti.com 参考最新的英文版本（控制文档）。

Table of Contents

1 特性 1
2 说明 1
3 Pin Configuration and Functions 3
4 Specifications 4
4.1 Absolute Maximum Ratings 4
4.2 Recommended Operating Conditions 4
4.3 Thermal Information 5
4.4 Electrical Characteristics 5
4.5 Timing Requirements, V_{CC} = 3.3 V ± 0.3 V 5
4.6 Timing Requirements, V_{CC} = 5 V ± 0.5 V 6
4.7 Switching Characteristics, V_{CC} = 3.3 V ± 0.3 V 6
4.8 Switching Characteristics, V_{CC} = 5 V ± 0.5 V 6
4.9 Operating Characteristics 6
5 Parameter Measurement Information 7
6 Detailed Description 8
6.1 Overview 8
6.2 Functional Block Diagram 8
6.3 Device Functional Modes 8
7 Application and Implementation 9
7.1 Power Supply Recommendations 9
7.2 Layout 9
8 Device and Documentation Support 10
8.1 Documentation Support (Analog) 10
8.2 接收文档更新通知 10
8.3 支持资源 10
8.4 Trademarks 10
8.5 术语表 10
8.6 静电放电警告 10
9 Revision History 10
10 Mechanical, Packaging, and Orderable Information 11

Copyright © 2024 Texas Instruments Incorporated

3 Pin Configuration and Functions

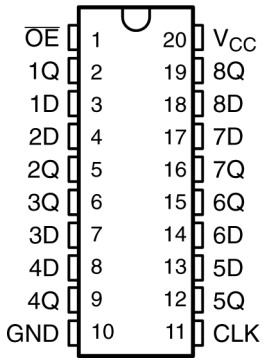

图 3-1. SN54AC374 J or W Package; SN74AC374 DB, DW, N, NS, or PW Package (Top View)

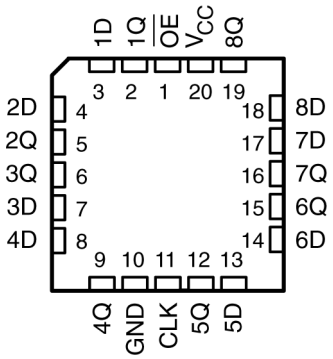

图 3-2. SN54AC374 FK Package (Top View)

表 3-1. Pin Functions

PIN		TYPE	DESCRIPTION
NAME	NO.		
$\overline{OE}$	1	I	Enable pin
1Q	2	O	Output 1
1D	3	I	Input 1
2D	4	I	Input 2
2Q	5	O	Output 2
3Q	6	O	Output 3
3D	7	I	Input 3
4D	8	I	Input 4
4Q	9	O	Output 4
GND	10	–	Ground pin
CLK	11	I	Clock pin
5Q	12	O	Output 5
5D	13	I	Input 5
6D	14	I	Input 6
6Q	15	O	Output 6
7Q	16	O	Output 7
7D	17	I	Input 7
8D	18	I	Input 8
8Q	19	O	Output 8
V_{CC}	20	–	Power pin

Copyright © 2024 Texas Instruments Incorporated

4 Specifications

4.1 Absolute Maximum Ratings

over operating free-air temperature range (unless otherwise noted)[1]

			MIN	MAX	UNIT
V_{CC}	Supply voltage range		−0.5	7	V
V_I [2]	Input voltage range		−0.5	V_{CC} + 0.5	V
V_O [2]	Output voltage range		−0.5	V_{CC} + 0.5	V
I_{IK}	Input clamp current	(V_I < 0 or V_I > V_{CC})		±20	mA
I_{OK}	Output clamp current	(V_O < 0 or V_O > V_{CC})		±20	mA
I_O	Continuous output current	(V_O = 0 to V_{CC})		±50	mA
	Continuous current through V_{CC} or GND			±200	mA
T_{stg}	Storage temperature range		−65	150	°C

(1) Stresses beyond those listed under "absolute maximum ratings" may cause permanent damage to the device. These are stress ratings only, and functional operation of the device at these or any other conditions beyond those indicated under "recommended operating conditions" is not implied. Exposure to absolute-maximum-rated conditions for extended periods may affect device reliability.
(2) The input and output voltage ratings may be exceeded if the input and output current ratings are observed.

4.2 Recommended Operating Conditions

over operating free-air temperature range (unless otherwise noted)[1]

			SN54AC374		SN74AC374		UNIT
			MIN	MAX	MIN	MAX	
V_{CC}	Supply voltage		2	6	2	6	V
V_{IH}	High-level input voltage	V_{CC} = 3 V	2.1		2.1		V
		V_{CC} = 4.5 V	3.15		3.15		
		V_{CC} = 5.5 V	3.85		3.85		
V_{IL}	Low-level input voltage	V_{CC} = 3 V		0.9		0.9	V
		V_{CC} = 4.5V		1.35		1.35	
		V_{CC} = 5.5 V		1.65		1.65	
V_I	Input voltage		0	V_{CC}	0	V_{CC}	V
V_O	Output voltage		0	V_{CC}	0	V_{CC}	V
I_{OH}	High-level output current	V_{CC} = 3 V		−12		−12	mA
		V_{CC} = 4.5 V		−24		−24	
		V_{CC} = 5.5 V		−24		−24	
I_{OL}	Low-level output current	V_{CC} = 3 V		12		12	mA
		V_{CC} = 4.5 V		24		24	
		V_{CC} = 5.5 V		24		24	
$\Delta t/\Delta v$	Input transition rise or fall rate			8		8	ns/V
T_A	Operating free-air temperature		−55	125	−40	85	°C

(1) All unused inputs of the device must be held at V_{CC} or GND for proper device operation. Refer to the TI application report, *Implications of Slow or Floating CMOS Inputs*, literature number SCBA004.

Copyright © 2024 Texas Instruments Incorporated

4.3 Thermal Information

THERMAL METRIC[1]		SN74AC374					UNIT
		DB (SSOP)	DW (SOIC)	N (PDIP)	NS (SO)	PW (TSSOP)	
		20 PINS	20 PINS	20 PINS	20 PINS	20 PINS	
$R_{\theta JA}$	Junction-to-ambient thermal resistance	70	101.2	69	60	83	°C/W

(1) For more information about traditional and new thermal metrics, see the *Semiconductor and IC Package Thermal Metrics* application report.

4.4 Electrical Characteristics

over recommended operating free-air temperature range (unless otherwise noted)

PARAMETER	TEST CONDITIONS	V_{CC}	T_A = 25°C			SN54AC374		SN74AC374		UNIT
			MIN	TYP	MAX	MIN	MAX	MIN	MAX	
V_{OH}	I_{OH} = −50 µA	3 V	2.9			2.9		2.9		V
		4.5 V	4.4			4.4		4.4		
		5.5 V	5.4			5.4		5.4		
	I_{OH} = −12 mA	3 V	2.56			2.4		2.46		
	I_{OH} = −24 mA	4.5 V	3.86			3.7		3.76		
		5.5 V	4.86			4.7		4.76		
V_{OL}	I_{OL} = 50 µA	3 V			0.1		0.1		0.1	V
		4.5 V			0.1		0.1		0.1	
		5.5 V			0.1		0.1		0.1	
	I_{OL} = 12 mA	3 V			0.36		0.5		0.44	
	I_{OL} = 24 mA	4.5 V			0.36		0.5		0.44	
		5.5 V			0.36		0.5		0.44	
I_I	$V_I = V_{CC}$ or GND	5.5 V			±0.1		±1		±1	µA
I_{OZ}	$V_O = V_{CC}$ or GND	5.5 V			±0.25		±5		±2.5	µA
I_{CC}	$V_I = V_{CC}$ or GND, I_O = 0	5.5 V			4		80		40	µA
C_i	$V_I = V_{CC}$ or GND	5 V		4.5						pF

4.5 Timing Requirements, V_{CC} = 3.3 V ± 0.3 V

over recommended operating free-air temperature range, V_{CC} = 3.3 V ± 0.3 V (unless otherwise noted) (see Load Circuit and Voltage Waveforms)

		T_A = 25°C		SN54AC374		SN74AC374		UNIT
		MIN	MAX	MIN	MAX	MIN	MAX	
f_{clock}	Clock frequency		60		60		60	MHz
t_w	Pulse duration, CLK high or low	5.5		6.5		6		ns
t_{su}	Setup time, data before CLK ↑	5.5		6.5		6		ns
t_h	Hold time, data after CLK ↑	1		1		1		ns

4.6 Timing Requirements, V_{CC} = 5 V ± 0.5 V

over recommended operating free-air temperature range, V_{CC} = 5 V ± 0.5 V (unless otherwise noted) (see Load Circuit and Voltage Waveforms)

		T_A = 25°C		SN54AC374		SN74AC374		UNIT
		MIN	MAX	MIN	MAX	MIN	MAX	
f_{clock}	Clock frequency		100		95		100	MHz
t_w	Pulse duration, CLK high or low	4		5		4.5		ns
t_{su}	Setup time, data before CLK ↑	4		5		4.5		ns
t_h	Hold time, data after CLK ↑	1.5		1.5		1.5		ns

4.7 Switching Characteristics, V_{CC} = 3.3 V ± 0.3 V

over recommended operating free-air temperature range, V_{CC} = 3.3 V ± 0.3 V (unless otherwise noted) (see Load Circuit and Voltage Waveforms)

PARAMETER	TO (INPUT)	TO (OUTPUT)	T_A = 25°C			SN54AC374		SN74AC374		UNIT
			MIN	TYP	MAX	MIN	MAX	MIN	MAX	
f_{max}			60	110		60		60		MHz
t_{PLH}	CLK	Q	3	11	13.5	3	16.5	1.5	15.5	ns
t_{PHL}			2.5	10	12.5	3	15	2	14	
t_{PZH}	$\overline{OE}$	Q	3	9.5	11.5	1	14	1.5	13	ns
t_{PZL}			3.5	9	11.5	1	14	1.5	13	
t_{PHZ}	$\overline{OE}$	Q	3	10.5	12.5	1	16	2	14.5	ns
t_{PLZ}			2	8	11.5	1	13	1	12.5	

4.8 Switching Characteristics, V_{CC} = 5 V ± 0.5 V

over recommended operating free-air temperature range, V_{CC} = 5 V ± 0.5 V (unless otherwise noted) (see Load Circuit and Voltage Waveforms)

PARAMETER	TO (INPUT)	TO (OUTPUT)	T_A = 25°C			SN54AC374		SN74AC374		UNIT
			MIN	TYP	MAX	MIN	MAX	MIN	MAX	
f_{max}			100	155		95		100		MHz
t_{PLH}	CLK	Q	2.5	8	9.5	3	12	1.5	10.5	ns
t_{PHL}			2	7	9	3	11	1.5	10	
t_{PZH}	$\overline{OE}$	Q	2	7	8.5	1.5	10	1	9.5	ns
t_{PZL}			2	6.5	8.5	1.5	10.5	1	9.5	
t_{PHZ}	$\overline{OE}$	Q	2	8	11	1.5	12.5	2	12.5	ns
t_{PLZ}			1.5	6.5	8.5	1.5	10.5	1	10	

4.9 Operating Characteristics

V_{CC} = 5 V, T_A = 25°C

PARAMETER		TEST CONDITIONS		TYP	UNIT
C_{pd}	Power dissipation capacitance	C_L = 50 pF,	f = 1 MHz	40	pF

Copyright © 2024 Texas Instruments Incorporated

5 Parameter Measurement Information

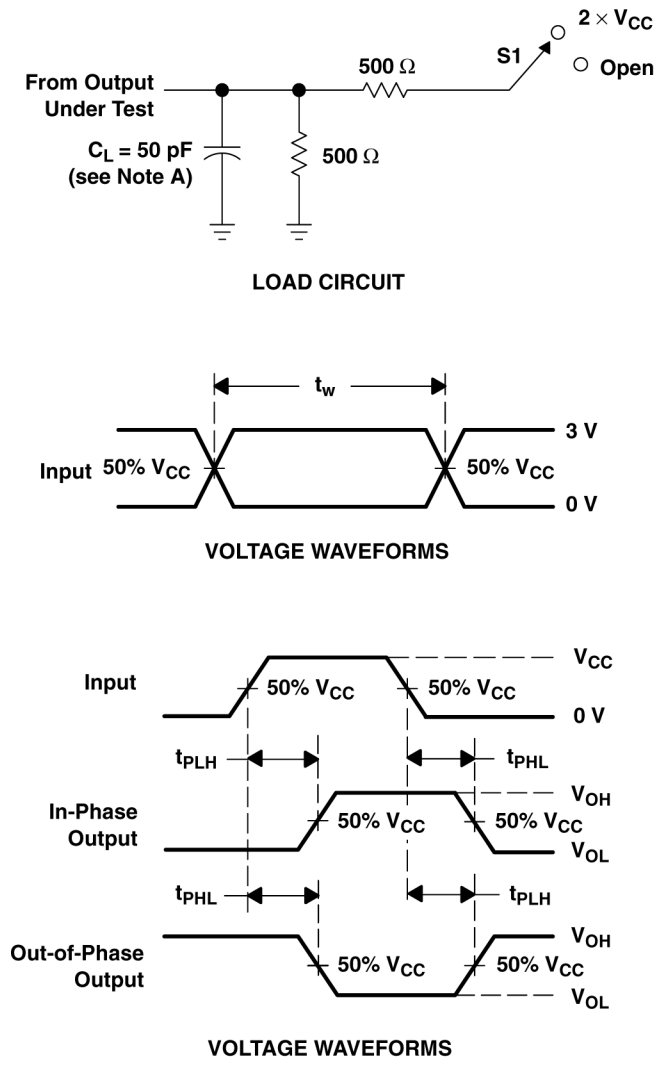

A. C_L includes probe and jig capacitance.

B. Waveform 1 is for an output with internal conditions such that the output is low except when disabled by the output control. Waveform 2 is for an output with internal conditions such that the output is high except when disabled by the output control.

C. All input pulses are supplied by generators having the following characteristics: PRR ⩽ 1 MHz, Z_O = 50 Ω, t_r ⩽ 2.5 ns, t_f ⩽ 2.5 ns.

D. The outputs are measured one at a time with one input transition per measurement.

图 5-1. Load Circuit and Voltage Waveforms

TEST	S1
t_{PLH}/t_{PHL}	Open
t_{PLZ}/t_{PZL}	2 × V_{CC}
t_{PHZ}/t_{PZH}	Open

6 Detailed Description

6.1 Overview

The eight flip-flops of the ’ AC374 devices are D-type edge-triggered flip-flops. On the positive transition of the clock (CLK) input, the Q outputs are set to the logic levels set up at the data (D) inputs.

A buffered output-enable ($\overline{OE}$) input can be used to place the eight outputs in either a normal logic state (high or low logic levels) or the high-impedance state. In the high-impedance state, the outputs neither load nor drive the bus lines significantly. The high-impedance state and the increased drive provide the capability to drive bus lines in bus-organized systems without need for interface or pullup components.

$\overline{OE}$ does not affect internal operations of the flip-flop. Old data can be retained or new data can be entered while the outputs are in the high-impedance state.

For specified high-impedance state during power up or power down, $\overline{OE}$ must be tied to V_{CC} through a pullup resistor; the minimum value of the resistor is determined by the current-sinking capability of the driver.

6.2 Functional Block Diagram

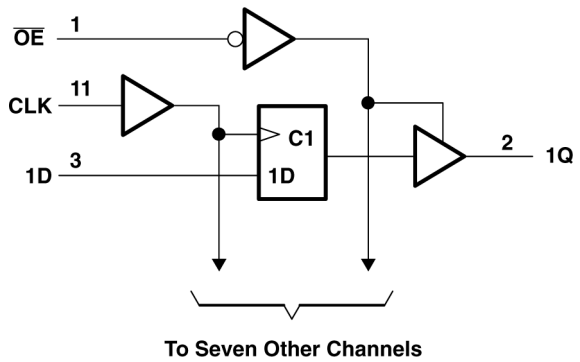

图 6-1. Logic Diagram (Positive Logic)

6.3 Device Functional Modes

表 6-1. Function Table (Each Flip-flop)

INPUTS			OUTPUT Q
OE	CLK	D	
L	↑	H	H
L	↑	L	L
L	H or L	X	Q_0
H	X	X	Z

Copyright © 2024 Texas Instruments Incorporated

7 Application and Implementation

备注

以下应用部分中的信息不属于 TI 器件规格的范围，TI 不担保其准确性和完整性。TI 的客 户应负责确定器件是否适用于其应用。客户应验证并测试其设计，以确保系统功能。

7.1 Power Supply Recommendations

The power supply can be any voltage between the min and max supply voltage rating located in *节 4.2*.

Each V_{CC} terminal should have a good bypass capacitor to prevent power disturbance. For devices with a single supply, TI recommends 0.1 µF and if there are multiple V_{CC} terminals, then TI recommends .01 µF or .022 µF for each power terminal. It is okay to parallel multiple bypass capacitors to reject different frequencies of noise. A 0.1 µF and 1 µF are commonly used in parallel. The bypass capacitor should be installed as close to the power terminal as possible for best results.

7.2 Layout

7.2.1 Layout Guidelines

When using multiple bit logic devices inputs should not ever float. In many cases, functions or parts of functions of digital logic devices are unused, for example, when only two inputs of a triple-input AND gate are used or only three of the four buffer gates are used. Such input pins should not be left unconnected because the undefined voltages at the outside connections result in undefined operational states. Specified below are the rules that must be observed under all circumstances. All unused inputs of digital logic devices must be connected to a high or low bias to prevent them from floating. The logic level that should be applied to any particular unused input depends on the function of the device. Generally they will be tied to GND or V_{CC} whichever make more sense or is more convenient. Floating outputs is generally acceptable, unless the part is a transceiver. If the transceiver has an output enable pin it will disable the outputs section of the part when asserted. This will not disable the input section of the I.O’s so they also cannot float when disabled.

7.2.1.1 Layout Example

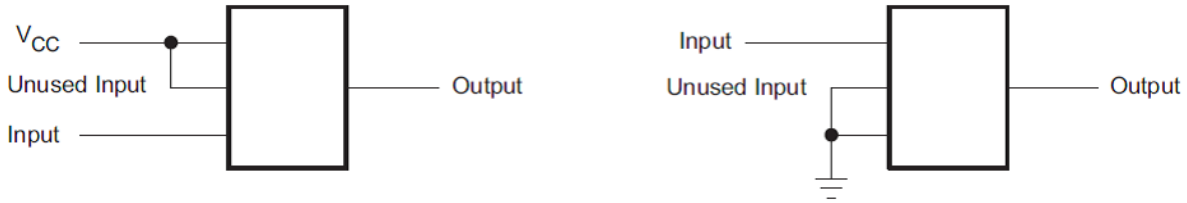

图 7-1. Layout Example

8 Device and Documentation Support

8.1 Documentation Support (Analog)

8.1.1 Related Documentation

The table below lists quick access links. Categories include technical documents, support and community resources, tools and software, and quick access to sample or buy.

表 8-1. Related Links

PARTS	PRODUCT FOLDER	SAMPLE & BUY	TECHNICAL DOCUMENTS	TOOLS & SOFTWARE	SUPPORT & COMMUNITY
SN54AC374	Click here	Click here	Click here	Click here	Click here
SN74AC374	Click here	Click here	Click here	Click here	Click here

8.2 接收文档更新通知

要接收文档更新通知，请导航至 ti.com 上的器件产品文件夹。点击*通知* 进行注册，即可每周接收产品信息更改摘要。有关更改的详细信息，请查看任何已修订文档中包含的修订历史记录。

8.3 支持资源

TI E2E™ 中文支持论坛是工程师的重要参考资料，可直接从专家处获得快速、经过验证的解答和设计帮助。搜索现有解答或提出自己的问题，获得所需的快速设计帮助。

链接的内容由各个贡献者“按原样”提供。这些内容并不构成 TI 技术规范，并且不一定反映 TI 的观点；请参阅 TI 的使用条款。

8.4 Trademarks

TI E2E™ is a trademark of Texas Instruments.
所有商标均为其各自所有者的财产。

8.5 术语表

TI 术语表　　本术语表列出并解释了术语、首字母缩略词和定义。

8.6 静电放电警告

静电放电 (ESD) 会损坏这个集成电路。德州仪器 (TI) 建议通过适当的预防措施处理所有集成电路。如果不遵守正确的处理和安装程序，可能会损坏集成电路。

ESD 的损坏小至导致微小的性能降级，大至整个器件故障。精密的集成电路可能更容易受到损坏，这是因为非常细微的参数更改都可能会导致器件与其发布的规格不相符。

9 Revision History

注：以前版本的页码可能与当前版本的页码不同

Changes from Revision F (August 2023) to Revision G (February 2024) — **Page**

- Updated R θ JA value: DW = 58 to 101.2, all values in °C/W 5
- Added *Application and Implementation* section..... 9

Changes from Revision E (October 2003) to Revision F (August 2023) — **Page**

- 添加了*器件信息* 表、*引脚功能* 表、*热性能信息* 表、*器件功能模式*、*器件和文档支持* 部分以及*机械、封装和可订购信息* 部分..... 1

Copyright © 2024 Texas Instruments Incorporated

10 Mechanical, Packaging, and Orderable Information

The following pages include mechanical, packaging, and orderable information. This information is the most current data available for the designated devices. This data is subject to change without notice and revision of this document. For browser-based versions of this data sheet, refer to the left-hand navigation.

PACKAGING INFORMATION

Orderable part number	Status (1)	Material type (2)	Package | Pins	Package qty | Carrier	RoHS (3)	Lead finish/ Ball material (4)	MSL rating/ Peak reflow (5)	Op temp (°C)	Part marking (6)
5962-87694012A	Active	Production	LCCC (FK) | 20	55 | TUBE	No	SNPB	N/A for Pkg Type	-55 to 125	5962-87694012A SNJ54AC374FK
5962-8769401RA	Active	Production	CDIP (J) | 20	20 | TUBE	No	SNPB	N/A for Pkg Type	-55 to 125	5962-8769401RA SNJ54AC374J
5962-8769401SA	Active	Production	CFP (W) | 20	25 | TUBE	No	SNPB	N/A for Pkg Type	-55 to 125	5962-8769401SA SNJ54AC374W
SN74AC374DBR	Last Time Buy	Production	SSOP (DB) | 20	2000 | LARGE T&R	Yes	NIPDAU	Level-1-260C-UNLIM	-40 to 85	AC374
SN74AC374DBR.A	Last Time Buy	Production	SSOP (DB) | 20	2000 | LARGE T&R	Yes	NIPDAU	Level-1-260C-UNLIM	-40 to 85	AC374
SN74AC374DW	Obsolete	Production	SOIC (DW) | 20	-	-	Call TI	Call TI	-40 to 85	AC374
SN74AC374DWR	Active	Production	SOIC (DW) | 20	2000 | LARGE T&R	Yes	NIPDAU	Level-1-260C-UNLIM	-40 to 85	AC374
SN74AC374DWR.A	Active	Production	SOIC (DW) | 20	2000 | LARGE T&R	Yes	NIPDAU	Level-1-260C-UNLIM	-40 to 85	AC374
SN74AC374N	Active	Production	PDIP (N) | 20	20 | TUBE	Yes	NIPDAU	N/A for Pkg Type	-40 to 85	SN74AC374N
SN74AC374N.A	Active	Production	PDIP (N) | 20	20 | TUBE	Yes	NIPDAU	N/A for Pkg Type	-40 to 85	SN74AC374N
SN74AC374NSR	Active	Production	SOP (NS) | 20	2000 | LARGE T&R	Yes	NIPDAU	Level-1-260C-UNLIM	-40 to 85	AC374
SN74AC374NSR.A	Active	Production	SOP (NS) | 20	2000 | LARGE T&R	Yes	NIPDAU	Level-1-260C-UNLIM	-40 to 85	AC374
SN74AC374PW	Obsolete	Production	TSSOP (PW) | 20	-	-	Call TI	Call TI	-40 to 85	AC374
SN74AC374PWR	NRND	Production	TSSOP (PW) | 20	2000 | LARGE T&R	Yes	NIPDAU	Level-1-260C-UNLIM	-40 to 85	AC374
SN74AC374PWR.A	NRND	Production	TSSOP (PW) | 20	2000 | LARGE T&R	Yes	NIPDAU	Level-1-260C-UNLIM	-40 to 85	AC374
SNJ54AC374FK	Active	Production	LCCC (FK) | 20	55 | TUBE	No	SNPB	N/A for Pkg Type	-55 to 125	5962-87694012A SNJ54AC374FK
SNJ54AC374FK.A	Active	Production	LCCC (FK) | 20	55 | TUBE	No	SNPB	N/A for Pkg Type	-55 to 125	5962-87694012A SNJ54AC374FK
SNJ54AC374J	Active	Production	CDIP (J) | 20	20 | TUBE	No	SNPB	N/A for Pkg Type	-55 to 125	5962-8769401RA SNJ54AC374J

Orderable part number	Status (1)	Material type (2)	Package | Pins	Package qty | Carrier	RoHS (3)	Lead finish/ Ball material (4)	MSL rating/ Peak reflow (5)	Op temp (°C)	Part marking (6)
SNJ54AC374J.A	Active	Production	CDIP (J) | 20	20 | TUBE	No	SNPB	N/A for Pkg Type	-55 to 125	5962-8769401RA SNJ54AC374J
SNJ54AC374W	Active	Production	CFP (W) | 20	25 | TUBE	No	SNPB	N/A for Pkg Type	-55 to 125	5962-8769401SA SNJ54AC374W
SNJ54AC374W.A	Active	Production	CFP (W) | 20	25 | TUBE	No	SNPB	N/A for Pkg Type	-55 to 125	5962-8769401SA SNJ54AC374W

(1) **Status:** For more details on status, see our product life cycle.

(2) **Material type:** When designated, preproduction parts are prototypes/experimental devices, and are not yet approved or released for full production. Testing and final process, including without limitation quality assurance, reliability performance testing, and/or process qualification, may not yet be complete, and this item is subject to further changes or possible discontinuation. If available for ordering, purchases will be subject to an additional waiver at checkout, and are intended for early internal evaluation purposes only. These items are sold without warranties of any kind.

(3) **RoHS values:** Yes, No, RoHS Exempt. See the TI RoHS Statement for additional information and value definition.

(4) **Lead finish/Ball material:** Parts may have multiple material finish options. Finish options are separated by a vertical ruled line. Lead finish/Ball material values may wrap to two lines if the finish value exceeds the maximum column width.

(5) **MSL rating/Peak reflow:** The moisture sensitivity level ratings and peak solder (reflow) temperatures. In the event that a part has multiple moisture sensitivity ratings, only the lowest level per JEDEC standards is shown. Refer to the shipping label for the actual reflow temperature that will be used to mount the part to the printed circuit board.

(6) **Part marking:** There may be an additional marking, which relates to the logo, the lot trace code information, or the environmental category of the part.

Multiple part markings will be inside parentheses. Only one part marking contained in parentheses and separated by a "~" will appear on a part. If a line is indented then it is a continuation of the previous line and the two combined represent the entire part marking for that device.

Important Information and Disclaimer: The information provided on this page represents TI's knowledge and belief as of the date that it is provided. TI bases its knowledge and belief on information provided by third parties, and makes no representation or warranty as to the accuracy of such information. Efforts are underway to better integrate information from third parties. TI has taken and continues to take reasonable steps to provide representative and accurate information but may not have conducted destructive testing or chemical analysis on incoming materials and chemicals. TI and TI suppliers consider certain information to be proprietary, and thus CAS numbers and other limited information may not be available for release.

In no event shall TI's liability arising out of such information exceed the total purchase price of the TI part(s) at issue in this document sold by TI to Customer on an annual basis.

OTHER QUALIFIED VERSIONS OF SN54AC374, SN74AC374 :

- Catalog : SN74AC374
- Military : SN54AC374

NOTE: Qualified Version Definitions:

- Catalog - TI's standard catalog product
- Military - QML certified for Military and Defense Applications

TAPE AND REEL INFORMATION

REEL DIMENSIONS

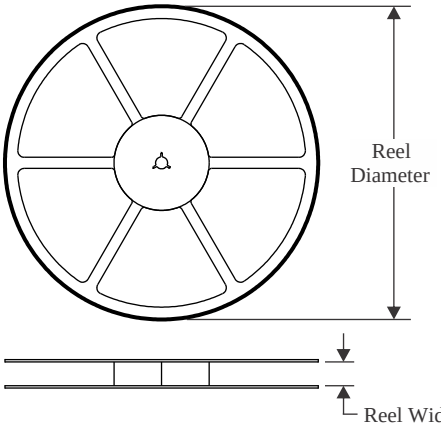

TAPE DIMENSIONS

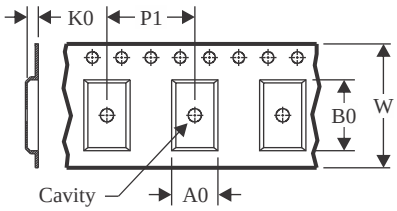

A0	Dimension designed to accommodate the component width
B0	Dimension designed to accommodate the component length
K0	Dimension designed to accommodate the component thickness
W	Overall width of the carrier tape
P1	Pitch between successive cavity centers

QUADRANT ASSIGNMENTS FOR PIN 1 ORIENTATION IN TAPE

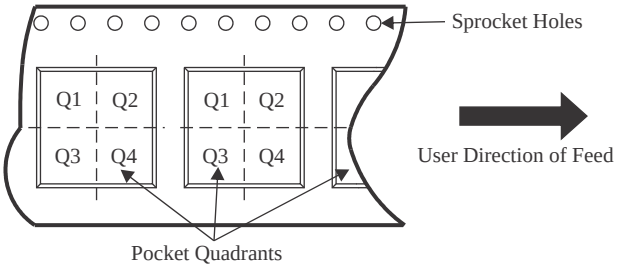

*All dimensions are nominal

Device	Package Type	Package Drawing	Pins	SPQ	Reel Diameter (mm)	Reel Width W1 (mm)	A0 (mm)	B0 (mm)	K0 (mm)	P1 (mm)	W (mm)	Pin1 Quadrant
SN74AC374DBR	SSOP	DB	20	2000	330.0	16.4	8.2	7.5	2.5	12.0	16.0	Q1
SN74AC374DWR	SOIC	DW	20	2000	330.0	24.4	10.8	13.3	2.7	12.0	24.0	Q1
SN74AC374DWR	SOIC	DW	20	2000	330.0	24.4	10.9	13.3	2.7	12.0	24.0	Q1
SN74AC374NSR	SOP	NS	20	2000	330.0	24.4	8.4	13.0	2.5	12.0	24.0	Q1
SN74AC374PWR	TSSOP	PW	20	2000	330.0	16.4	6.95	7.0	1.4	8.0	16.0	Q1

TAPE AND REEL BOX DIMENSIONS

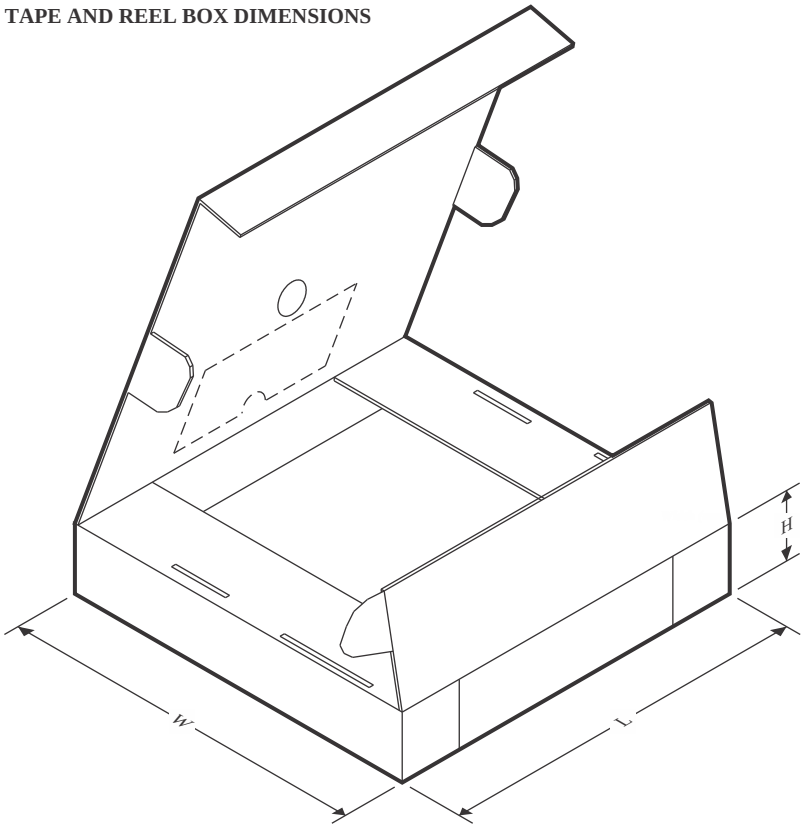

*All dimensions are nominal

Device	Package Type	Package Drawing	Pins	SPQ	Length (mm)	Width (mm)	Height (mm)
SN74AC374DBR	SSOP	DB	20	2000	353.0	353.0	32.0
SN74AC374DWR	SOIC	DW	20	2000	356.0	356.0	45.0
SN74AC374DWR	SOIC	DW	20	2000	356.0	356.0	45.0
SN74AC374NSR	SOP	NS	20	2000	356.0	356.0	45.0
SN74AC374PWR	TSSOP	PW	20	2000	353.0	353.0	32.0

TUBE

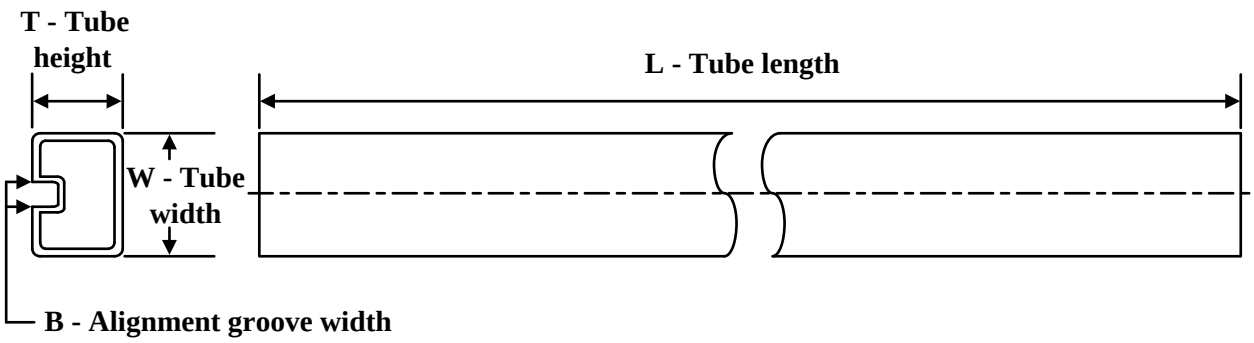

*All dimensions are nominal

Device	Package Name	Package Type	Pins	SPQ	L (mm)	W (mm)	T (µm)	B (mm)
5962-87694012A	FK	LCCC	20	55	506.98	12.06	2030	NA
5962-8769401SA	W	CFP	20	25	506.98	26.16	6220	NA
SN74AC374N	N	PDIP	20	20	506	13.97	11230	4.32
SN74AC374N.A	N	PDIP	20	20	506	13.97	11230	4.32
SNJ54AC374FK	FK	LCCC	20	55	506.98	12.06	2030	NA
SNJ54AC374FK.A	FK	LCCC	20	55	506.98	12.06	2030	NA
SNJ54AC374W	W	CFP	20	25	506.98	26.16	6220	NA
SNJ54AC374W.A	W	CFP	20	25	506.98	26.16	6220	NA

W (R–GDFP–F20) CERAMIC DUAL FLATPACK

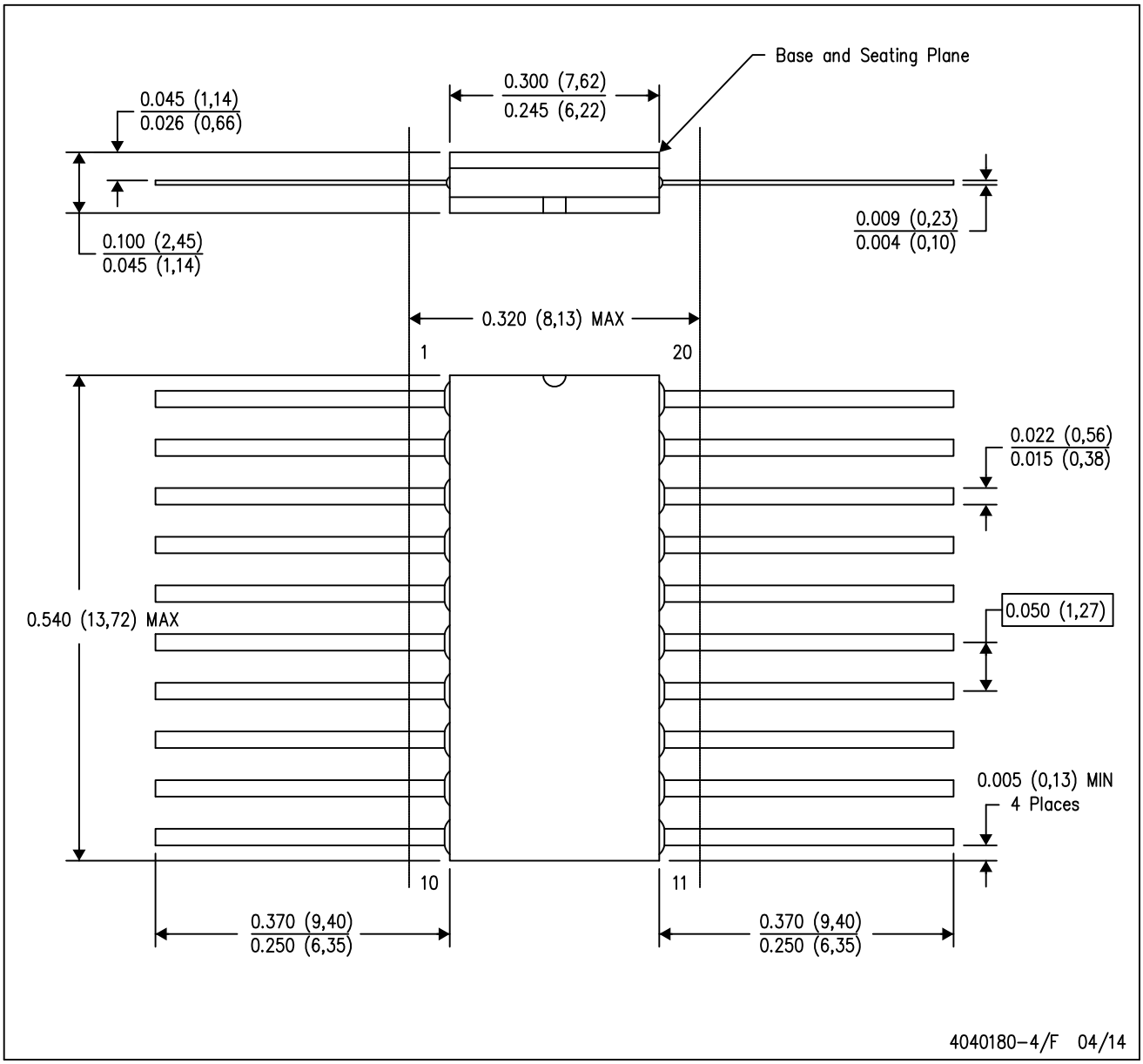

NOTES:
A. All linear dimensions are in inches (millimeters).
B. This drawing is subject to change without notice.
C. This package can be hermetically sealed with a ceramic lid using glass frit.
D. Index point is provided on cap for terminal identification only.
E. Falls within Mil–Std 1835 GDFP2–F20

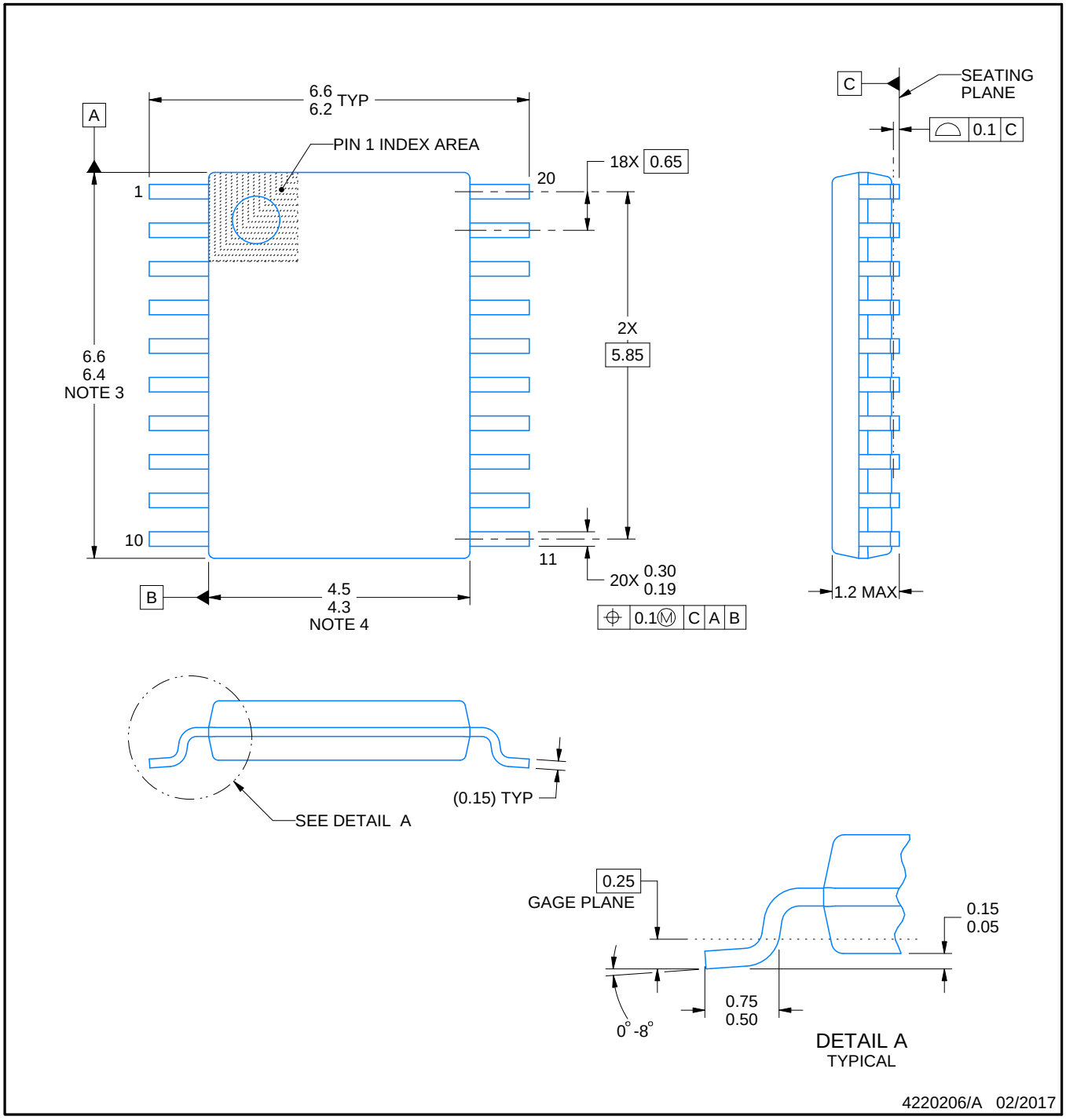

NOTES:

1. All linear dimensions are in millimeters. Any dimensions in parenthesis are for reference only. Dimensioning and tolerancing per ASME Y14.5M.
2. This drawing is subject to change without notice.
3. This dimension does not include mold flash, protrusions, or gate burrs. Mold flash, protrusions, or gate burrs shall not exceed 0.15 mm per side.
4. This dimension does not include interlead flash. Interlead flash shall not exceed 0.25 mm per side.
5. Reference JEDEC registration MO-153.

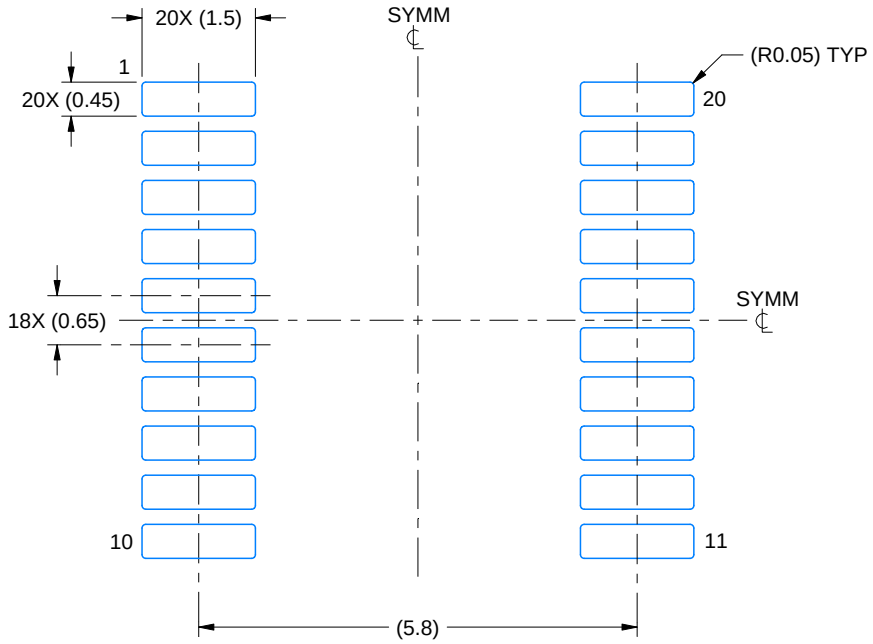

LAND PATTERN EXAMPLE
EXPOSED METAL SHOWN
SCALE: 10X

NON-SOLDER MASK DEFINED (PREFERRED)

SOLDER MASK DEFINED

SOLDER MASK DETAILS

4220206/A 02/2017

NOTES: (continued)

6. Publication IPC-7351 may have alternate designs.
7. Solder mask tolerances between and around signal pads can vary based on board fabrication site.

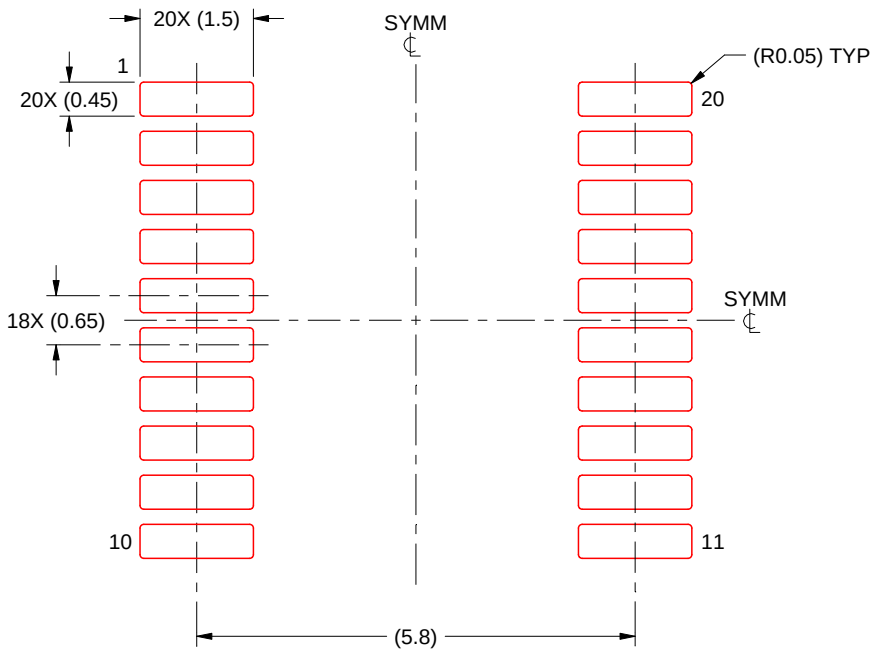

SOLDER PASTE EXAMPLE
BASED ON 0.125 mm THICK STENCIL
SCALE: 10X

4220206/A 02/2017

NOTES: (continued)

8. Laser cutting apertures with trapezoidal walls and rounded corners may offer better paste release. IPC-7525 may have alternate design recommendations.
9. Board assembly site may have different recommendations for stencil design.

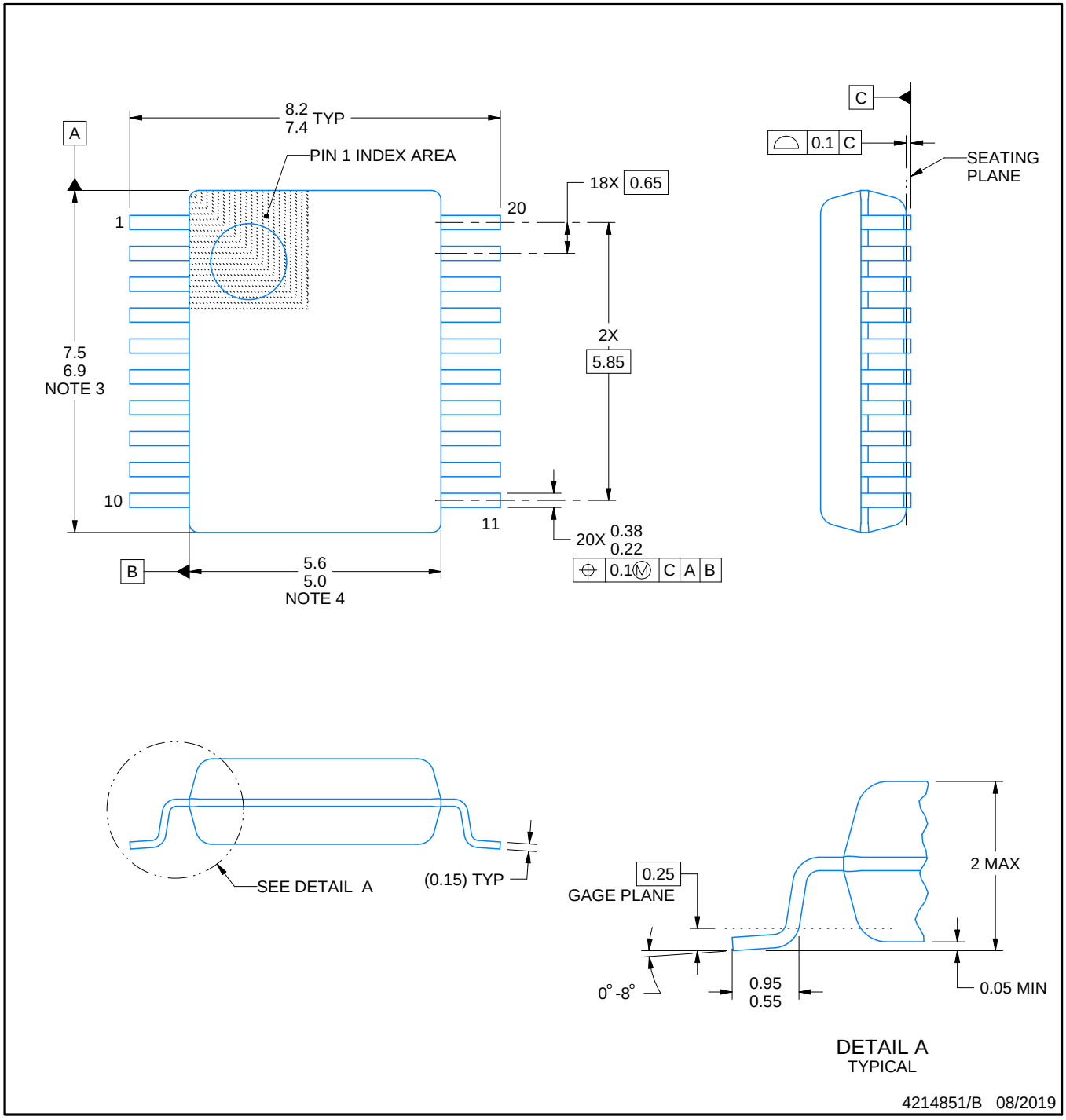

NOTES:

1. All linear dimensions are in millimeters. Any dimensions in parenthesis are for reference only. Dimensioning and tolerancing per ASME Y14.5M.
2. This drawing is subject to change without notice.
3. This dimension does not include mold flash, protrusions, or gate burrs. Mold flash, protrusions, or gate burrs shall not exceed 0.15 mm per side.
4. This dimension does not include interlead flash. Interlead flash shall not exceed 0.25 mm per side.
5. Reference JEDEC registration MO-150.

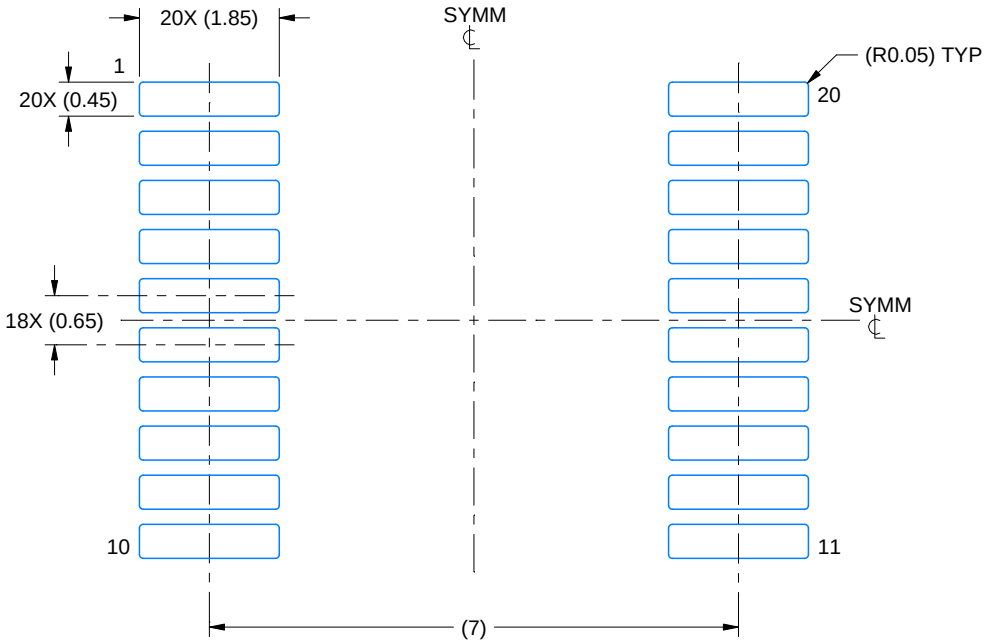

LAND PATTERN EXAMPLE
EXPOSED METAL SHOWN
SCALE: 10X

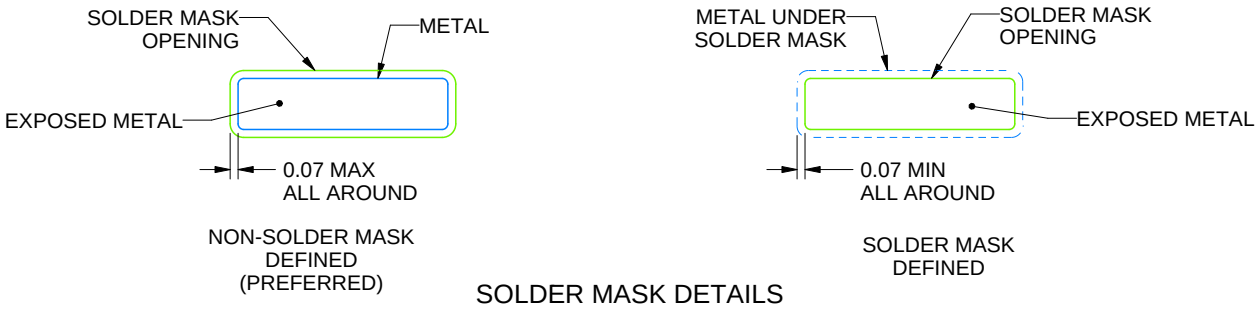

SOLDER MASK DETAILS

4214851/B 08/2019

NOTES: (continued)

6. Publication IPC-7351 may have alternate designs.
7. Solder mask tolerances between and around signal pads can vary based on board fabrication site.

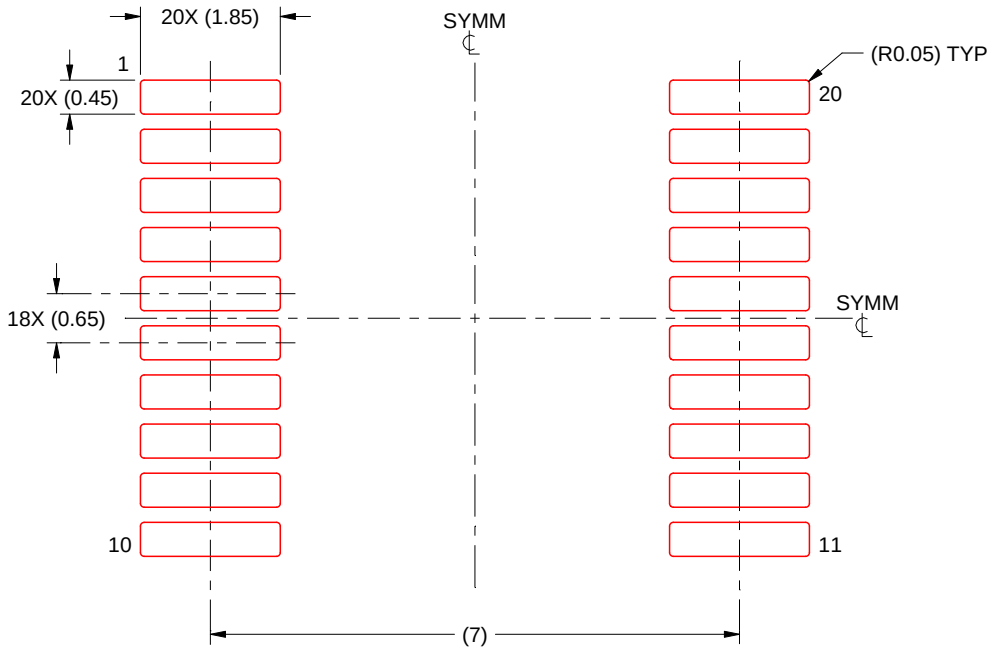

SOLDER PASTE EXAMPLE
BASED ON 0.125 mm THICK STENCIL
SCALE: 10X

4214851/B 08/2019

NOTES: (continued)

8. Laser cutting apertures with trapezoidal walls and rounded corners may offer better paste release. IPC-7525 may have alternate design recommendations.
9. Board assembly site may have different recommendations for stencil design.

MECHANICAL DATA

NS (R-PDSO-G)** **PLASTIC SMALL-OUTLINE PACKAGE**

14-PINS SHOWN

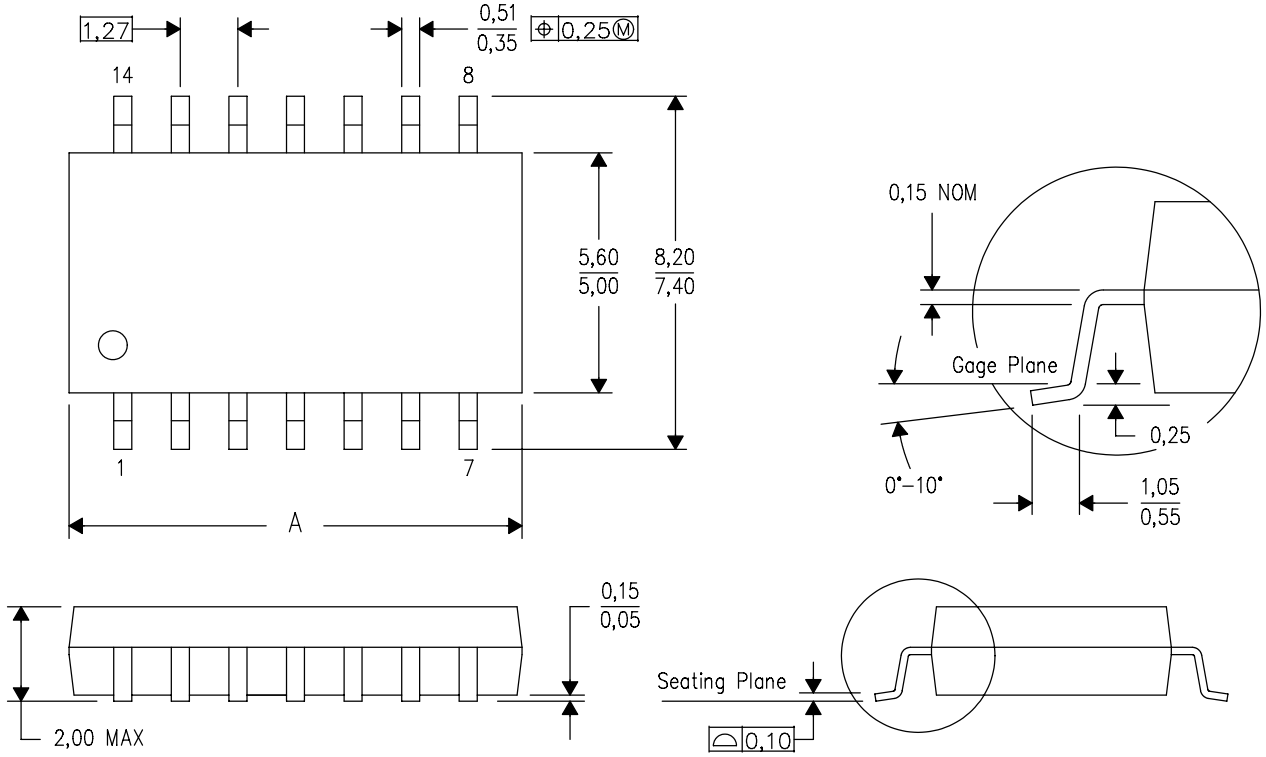

DIM \ PINS **	14	16	20	24
A MAX	10,50	10,50	12,90	15,30
A MIN	9,90	9,90	12,30	14,70

4040062/C 03/03

NOTES:
A. All linear dimensions are in millimeters.
B. This drawing is subject to change without notice.
C. Body dimensions do not include mold flash or protrusion, not to exceed 0,15.

J (R–GDIP–T**) CERAMIC DUAL IN–LINE PACKAGE

14 LEADS SHOWN

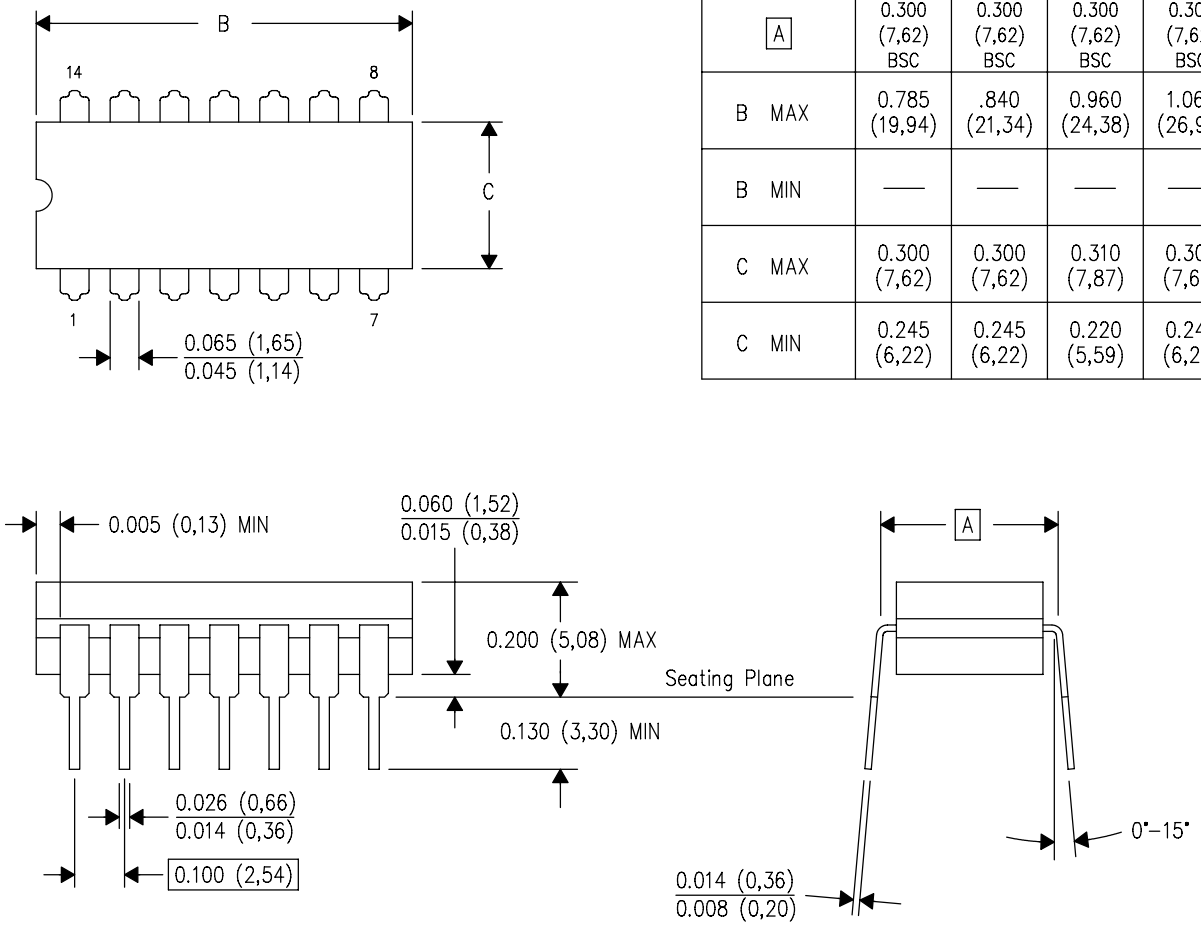

DIM \ PINS **	14	16	18	20
A	0.300 (7,62) BSC	0.300 (7,62) BSC	0.300 (7,62) BSC	0.300 (7,62) BSC
B MAX	0.785 (19,94)	.840 (21,34)	0.960 (24,38)	1.060 (26,92)
B MIN	—	—	—	—
C MAX	0.300 (7,62)	0.300 (7,62)	0.310 (7,87)	0.300 (7,62)
C MIN	0.245 (6,22)	0.245 (6,22)	0.220 (5,59)	0.245 (6,22)

4040083/F 03/03

NOTES:
- A. All linear dimensions are in inches (millimeters).
- B. This drawing is subject to change without notice.
- C. This package is hermetically sealed with a ceramic lid using glass frit.
- D. Index point is provided on cap for terminal identification only on press ceramic glass frit seal only.
- E. Falls within MIL STD 1835 GDIP1–T14, GDIP1–T16, GDIP1–T18 and GDIP1–T20.

GENERIC PACKAGE VIEW

FK 20

LCCC - 2.03 mm max height

8.89 x 8.89, 1.27 mm pitch

LEADLESS CERAMIC CHIP CARRIER

This image is a representation of the package family, actual package may vary.
Refer to the product data sheet for package details.

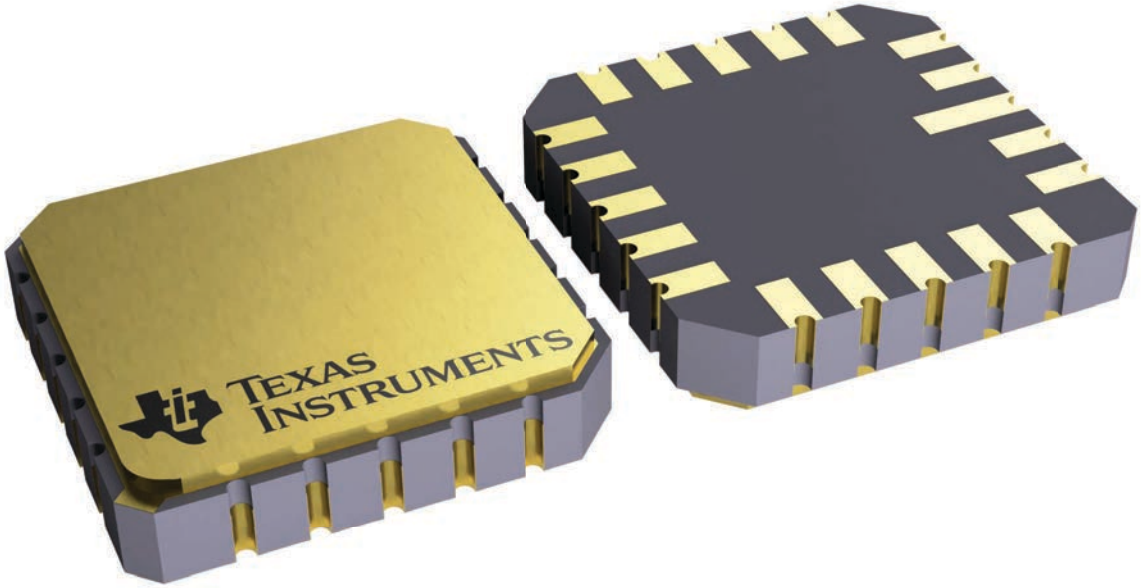

4229370VA\

N (R–PDIP–T**) PLASTIC DUAL–IN–LINE PACKAGE

16 PINS SHOWN

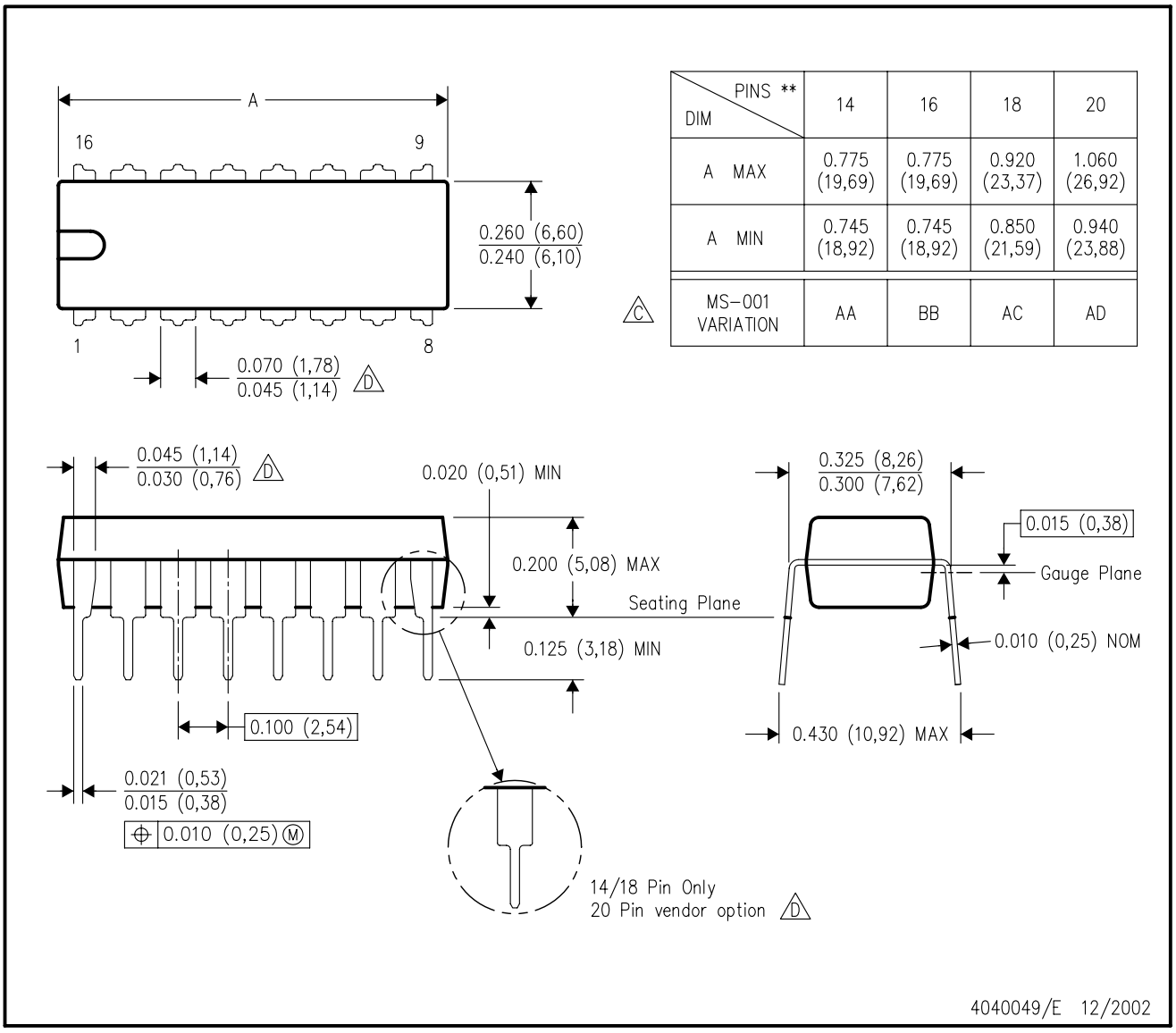

DIM \ PINS **	14	16	18	20
A MAX	0.775 (19,69)	0.775 (19,69)	0.920 (23,37)	1.060 (26,92)
A MIN	0.745 (18,92)	0.745 (18,92)	0.850 (21,59)	0.940 (23,88)
MS–001 VARIATION (C)	AA	BB	AC	AD

NOTES:
A. All linear dimensions are in inches (millimeters).
B. This drawing is subject to change without notice.
C. Falls within JEDEC MS–001, except 18 and 20 pin minimum body length (Dim A).
D. The 20 pin end lead shoulder width is a vendor option, either half or full width.

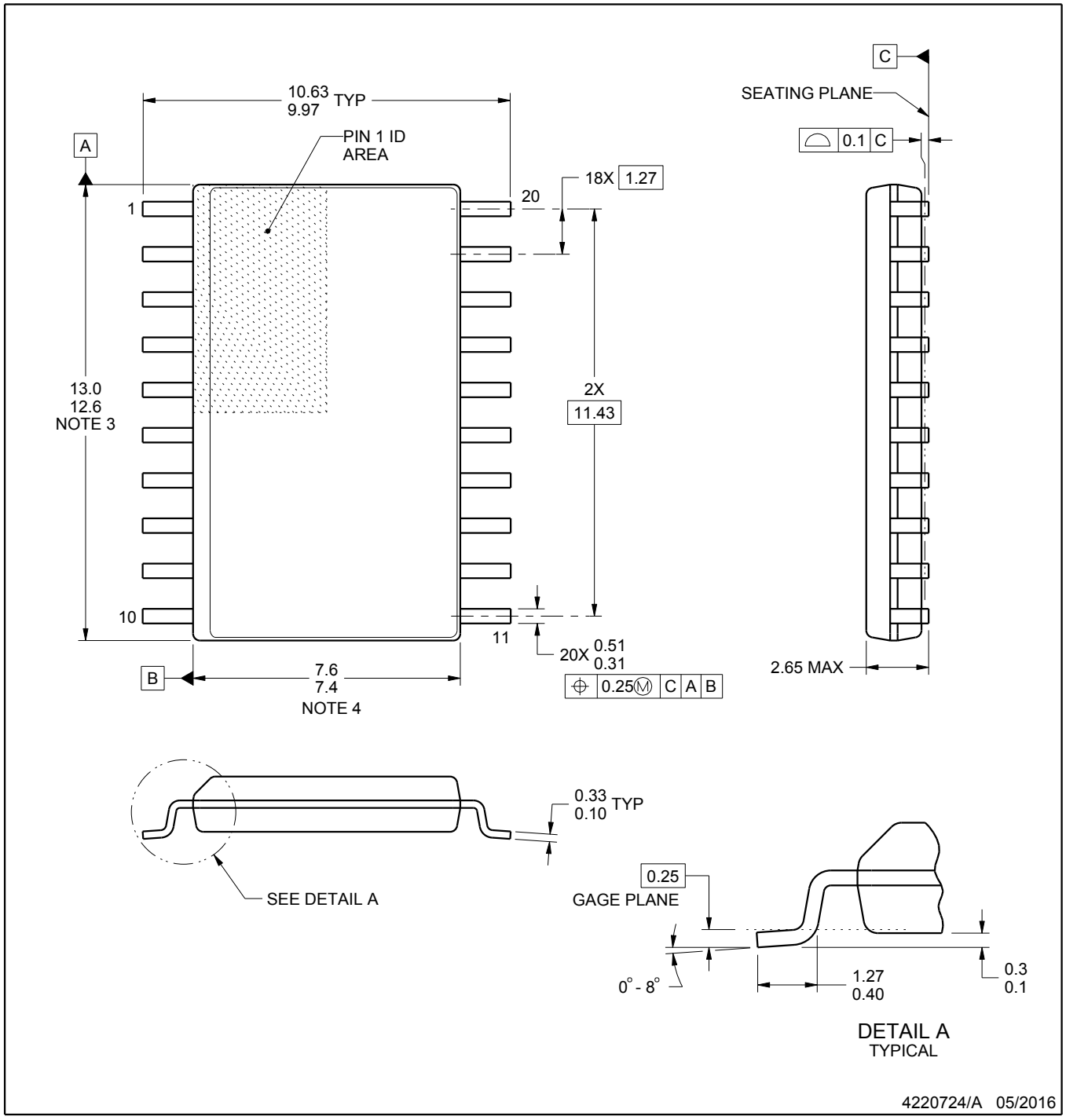

NOTES:

1. All linear dimensions are in millimeters. Dimensions in parenthesis are for reference only. Dimensioning and tolerancing per ASME Y14.5M.
2. This drawing is subject to change without notice.
3. This dimension does not include mold flash, protrusions, or gate burrs. Mold flash, protrusions, or gate burrs shall not exceed 0.15 mm per side.
4. This dimension does not include interlead flash. Interlead flash shall not exceed 0.43 mm per side.
5. Reference JEDEC registration MS-013.

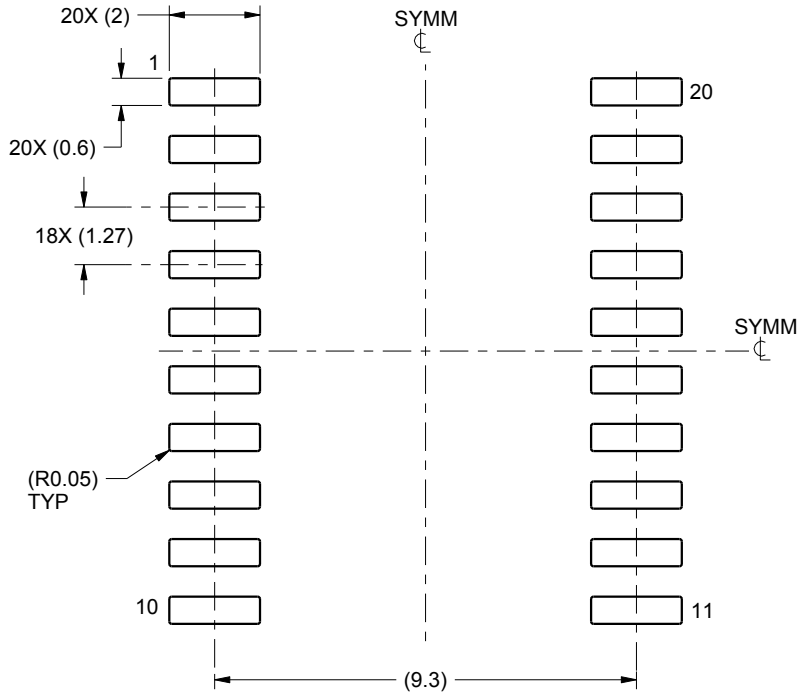

LAND PATTERN EXAMPLE
SCALE:6X

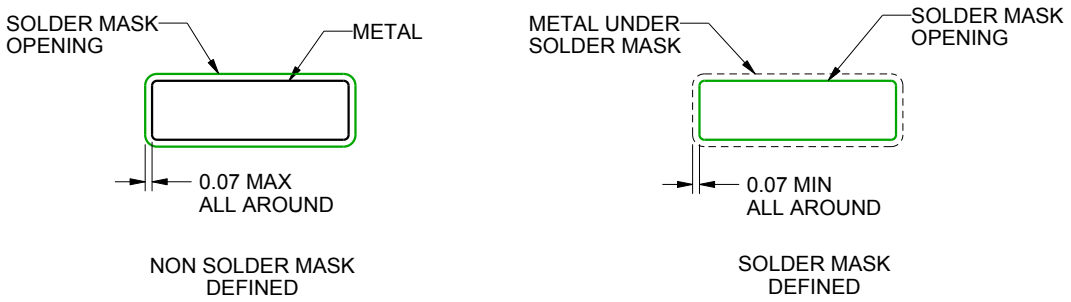

SOLDER MASK DETAILS

4220724/A 05/2016

NOTES: (continued)

6. Publication IPC-7351 may have alternate designs.
7. Solder mask tolerances between and around signal pads can vary based on board fabrication site.

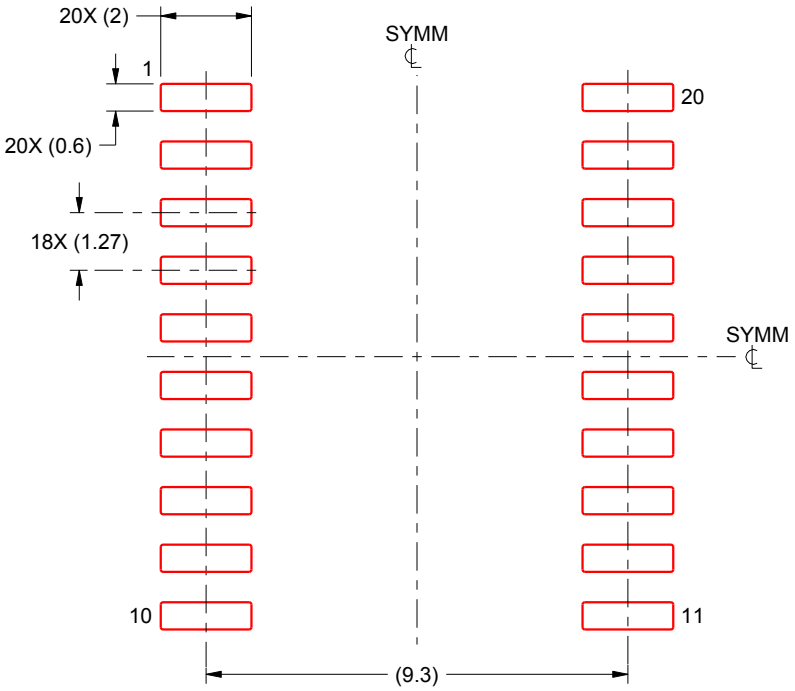

SOLDER PASTE EXAMPLE
BASED ON 0.125 mm THICK STENCIL
SCALE:6X

4220724/A 05/2016

NOTES: (continued)

8. Laser cutting apertures with trapezoidal walls and rounded corners may offer better paste release. IPC-7525 may have alternate design recommendations.
9. Board assembly site may have different recommendations for stencil design.

重要通知和免责声明

TI“按原样”提供技术和可靠性数据（包括数据表）、设计资源（包括参考设计）、应用或其他设计建议、网络工具、安全信息和其他资源，不保证没有瑕疵且不做出任何明示或暗示的担保，包括但不限于对适销性、与某特定用途的适用性或不侵犯任何第三方知识产权的暗示担保。

这些资源可供使用 TI 产品进行设计的熟练开发人员使用。您将自行承担以下全部责任：(1) 针对您的应用选择合适的 TI 产品，(2) 设计、验证并测试您的应用，(3) 确保您的应用满足相应标准以及任何其他安全、安保法规或其他要求。

这些资源如有变更，恕不另行通知。TI 授权您仅可将这些资源用于研发本资源所述的 TI 产品的相关应用。严禁以其他方式对这些资源进行复制或展示。您无权使用任何其他 TI 知识产权或任何第三方知识产权。对于因您对这些资源的使用而对 TI 及其代表造成的任何索赔、损害、成本、损失和债务，您将全额赔偿，TI 对此概不负责。

TI 提供的产品受 TI 销售条款)、TI 通用质量指南 或 ti.com 上其他适用条款或 TI 产品随附的其他适用条款的约束。TI 提供这些资源并不会扩展或以其他方式更改 TI 针对 TI 产品发布的适用的担保或担保免责声明。 除非德州仪器 (TI) 明确将某产品指定为定制产品或客户特定产品，否则其产品均为按确定价格收入目录的标准通用器件。

TI 反对并拒绝您可能提出的任何其他或不同的条款。

版权所有 © 2026，德州仪器 (TI) 公司

最后更新日期：2025 年 10 月