SNx4AC08 四通道双输入正与门

1 特性

- 2V 至 6V V_{CC} 运行
- 输入电压高达 6V
- t_{pd} 最大值为 7.5ns（5V 时）

2 说明

’AC08 器件是四通道 2 输入正与门。此类器件以正逻辑执行布尔函数 Y = A • B。

器件信息

器件型号	封装(1)	封装尺寸(2)	本体尺寸(3)
SNx4AC08	BQA（WQFN，14）	3mm x 2.5mm	3mm x 2.5mm
	DB（SSOP，14）	6.2mm x 7.8mm	6.2mm x 5.3mm
	D（SOIC，14）	8.65mm x 6mm	8.65mm x 3.9mm
	N（PDIP，14）	19.3mm x 9.4mm	19.3mm x 6.35mm
	NS（SO，14）	10.2mm x 7.8mm	10.3mm x 5.3mm
	PW（TSSOP，14）	5mm x 6.4mm	5mm x 4.4mm

(1) 有关更多信息，请参阅 节 10。
(2) 封装尺寸（长 × 宽）为标称值，并包括引脚（如适用）。
(3) 本体尺寸（长 × 宽）为标称值，不包括引脚。



逻辑图，每个逻辑门（正逻辑）

本资源的原文使用英文撰写。 为方便起见，TI 提供了译文；由于翻译过程中可能使用了自动化工具，TI 不保证译文的准确性。 为确认准确性，请务必访问 ti.com 参考最新的英文版本（控制文档）。

Table of Contents

1 特性 1
2 说明 1
3 Pin Configuration and Functions 3
4 Specifications 5
4.1 Absolute Maximum Ratings 5
4.2 Recommended Operating Conditions 5
4.3 Thermal Information 6
4.4 Electrical Characteristics 6
4.5 Switching Characteristics, V_{CC} = 3.3V ± 0.3V 6
4.6 Switching Characteristics, V_{CC} = 5V ± 0.5V 7
4.7 Operating Characteristics 7
5 Parameter Measurement Information 8
6 Detailed Description 9
6.1 Functional Block Diagram 9
6.2 Device Functional Modes 9
7 Application and Implementation 10
7.1 Power Supply Recommendations 10
7.2 Layout 10
8 Device and Documentation Support 11
8.1 Documentation Support (Analog) 11
8.2 接收文档更新通知 11
8.3 支持资源 11
8.4 Trademarks 11
8.5 静电放电警告 11
8.6 术语表 11
9 Revision History 11
10 Mechanical, Packaging, and Orderable Information 12

Copyright © 2025 Texas Instruments Incorporated

3 Pin Configuration and Functions

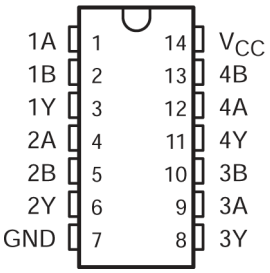

图 3-1. SN54AC08 J or W Package; SN74AC08 D, DB, N, NS, or PW Package (Top View)

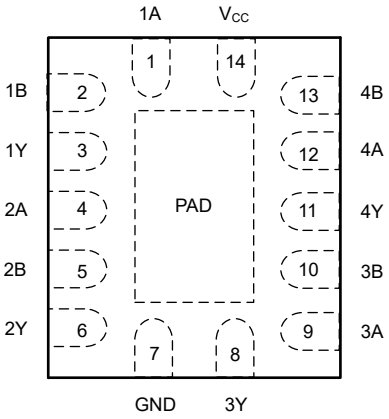

图 3-2. BQA Package, 14-Pin WQFN (Top View)

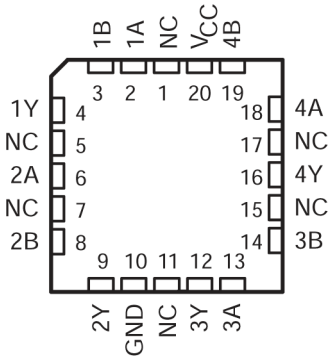

NC – No internal connection

图 3-3. SN54AC08 FK Package (Top View)

表 3-1. Pin Functions

PIN			I/O	DESCRIPTION
NAME	D, N, NS, PW, J, or W	FK		
1A	1	2	Input	Channel 1, Input A
1B	2	3	Input	Channel 1, Input B
1Y	3	4	Output	Channel 1, Output Y
2A	4	6	Input	Channel 2, Input A
2B	5	8	Input	Channel 2, Input B
2Y	6	9	Output	Channel 2, Output Y
GND	7	10	—	Ground
3Y	8	12	Output	Channel 3, Output Y
3A	9	13	Input	Channel 3, Input A
3B	10	14	Input	Channel 3, Input B
4Y	11	16	Output	Channel 4, Output Y
4A	12	18	Input	Channel 4, Input A
4B	13	19	Input	Channel 4, Input B
V_{CC}	14	20	—	Positive Supply

Copyright © 2025 Texas Instruments Incorporated

表 3-1. Pin Functions（续）

PIN			I/O	DESCRIPTION
NAME	D, N, NS, PW, J, or W	FK		
NC		1, 5, 7, 11, 15, 17	—	Not internally connected

Copyright © 2025 Texas Instruments Incorporated

4 Specifications

4.1 Absolute Maximum Ratings

over operating free-air temperature range (unless otherwise noted)(1)

			MIN	MAX	UNIT
V_{CC}	Supply voltage range		−0.5	7	V
V_I (2)	Input voltage range		−0.5	V_{CC} + 0.5	V
V_O (2)	Output voltage range		−0.5	V_{CC} + 0.5	V
I_{IK}	Input clamp current	(V_I < 0 or V_I > V_{CC})		±20	mA
I_{OK}	Output clamp current	(V_O < 0 or V_O > V_{CC})		±20	mA
I_O	Continuous output current	(V_O = 0 to V_{CC})		±50	mA
	Continuous current through V_{CC} or GND			±200	mA
T_{stg}	Storage temperature range		−65	150	°C

(1) Stresses beyond those listed under “absolute maximum ratings” may cause permanent damage to the device. These are stress ratings only, and functional operation of the device at these or any other conditions beyond those indicated under “recommended operating conditions” is not implied. Exposure to absolute-maximum-rated conditions for extended periods may affect device reliability.
(2) The input and output voltage ratings may be exceeded if the input and output current ratings are observed.

4.2 Recommended Operating Conditions

over operating free-air temperature range (unless otherwise noted)(1)

			SN54AC08		SN74AC08		UNIT
			MIN	MAX	MIN	MAX	
V_{CC}	Supply voltage		2	6	2	6	V
V_{IH}	High-level input voltage	V_{CC} = 3V	2.1		2.1		V
		V_{CC} = 4.5V	3.15		3.15		
		V_{CC} = 5.5V	3.85		3.85		
V_{IL}	Low-level input voltage	V_{CC} = 3V		0.9		0.9	V
		V_{CC} = 4.5V		1.35		1.35	
		V_{CC} = 5.5V		1.65		1.65	
V_I	Input voltage		0	V_{CC}	0	V_{CC}	V
V_O	Output voltage		0	V_{CC}	0	V_{CC}	V
I_{OH}	High-level output current	V_{CC} = 3 V		−12		−12	mA
		V_{CC} = 4.5 V		−24		−24	
		V_{CC} = 5.5 V		−24		−24	
I_{OL}	Low-level output current	V_{CC} = 3 V		12		12	mA
		V_{CC} = 4.5 V		24		24	
		V_{CC} = 5.5 V		24		24	
$\Delta t/\Delta v$	Input transition rise or fall rate			8		8	ns/V
T_A	Operating free-air temperature		−55	125	−40	85	°C

(1) All unused inputs of the device must be held at V_{CC} or GND to ensure proper device operation. Refer to the TI application report, *Implications of Slow or Floating CMOS Inputs*, literature number SCBA004.

Copyright © 2025 Texas Instruments Incorporated

4.3 Thermal Information

THERMAL METRIC(1)		SNx4AC08						UNIT
		BQA (WQFN)	D (SOIC)	DB (SSOP)	N (PDIP)	NS (SOP)	PW (TSSOP)	
		14 PINS	14 PINS	14 PINS	14 PINS	14 PINS	14 PINS	
$R_{\theta JA}$	Junction-to-ambient thermal resistance	91.3	119.9	96	80	76	145.7	°C/W

(1) For more information about traditional and new thermal metrics, see the Semiconductor and IC Package Thermal Metrics application report.

4.4 Electrical Characteristics

over recommended operating free-air temperature range (unless otherwise noted)

PARAMETER	TEST CONDITIONS	V_{CC}	T_A = 25°C			SN54AC08		SN74AC08		UNIT
			MIN	TYP	MAX	MIN	MAX	MIN	MAX	
V_{OH}	I_{OH} = −50 µA	3V	2.9			2.9		2.9		V
		4.5V	4.4			4.4		4.4		
		5.5V	5.4			5.4		5.4		
	I_{OH} = −12 mA	3V	2.56			2.4		2.46		
	I_{OH} = −24 mA	4.5V	3.86			3.7		3.76		
		5.5V	4.86			4.7		4.76		
	I_{OH} = −50 mA(1)	5.5V				3.85				
	I_{OH} = −75 mA(1)	5.5V						3.85		
V_{OL}	I_{OL} = 50 µA	3V		0.002	0.1		0.1		0.1	V
		4.5V		0.001	0.1		0.1		0.1	
		5.5V		0.001	0.1		0.1		0.1	
	I_{OL} = 12 mA	3V			0.36		0.5		0.44	
	I_{OL} = 24 mA	4.5V			0.36		0.5		0.44	
		5.5V			0.36		0.5		0.44	
	I_{OL} = 50 mA(1)	5.5V					1.65			
	I_{OL} = 75 mA(1)	5.5V							1.65	
I_I A or B ports	V_I = V_{CC} or GND	5.5V			±0.1		±1		±1	µA
I_{CC}	V_I = V_{CC} or GND, I_O = 0	5.5V			2		40		20	µA
C_i	VI = V_{CC} or GND	5V		4.5						pF

(1) Not more than one output should be tested at a time, and the duration of the test should not exceed 2 ms.

4.5 Switching Characteristics, V_{CC} = 3.3V ± 0.3V

over recommended operating free-air temperature range, V_{CC} = 3.3V ± 0.3V (unless otherwise noted) (see Load Circuit and Voltage Waveforms)

PARAMETER	FROM (INPUT)	TO (OUTPUT)	T_A = 25°C			SN54AC08		SN74AC08		UNIT
			MIN	TYP	MAX	MIN	MAX	MIN	MAX	
t_{PLH}	A or B	Y	1.5	7.5	9.5	1	12.5	1	10	ns
t_{PHL}			1.5	7	8.5	1	11.5	1	9	

Copyright © 2025 Texas Instruments Incorporated

4.6 Switching Characteristics, V_{CC} = 5V ± 0.5V

over recommended operating free-air temperature range, V_{CC} = 5V ± 0.5V (unless otherwise noted) (see Load Circuit and Voltage Waveforms)

PARAMETER	FROM (INPUT)	TO (OUTPUT)	T_A = 25°C			SN54AC08		SN74AC08		UNIT
			MIN	TYP	MAX	MIN	MAX	MIN	MAX	
t_{PLH}	A or B	Y	1.5	5.5	7.5	1	9	1	8.5	ns
t_{PHL}			1.5	5.5	7	1	8.5	1	7.5	

4.7 Operating Characteristics

V_{CC} = 5 V, T_A = 25°C

PARAMETER		TEST CONDITIONS		TYP	UNIT
C_{pd}	Power dissipation capacitance	C_L = 50 pF,	f = 1 MHz	20	pF

Copyright © 2025 Texas Instruments Incorporated

5 Parameter Measurement Information

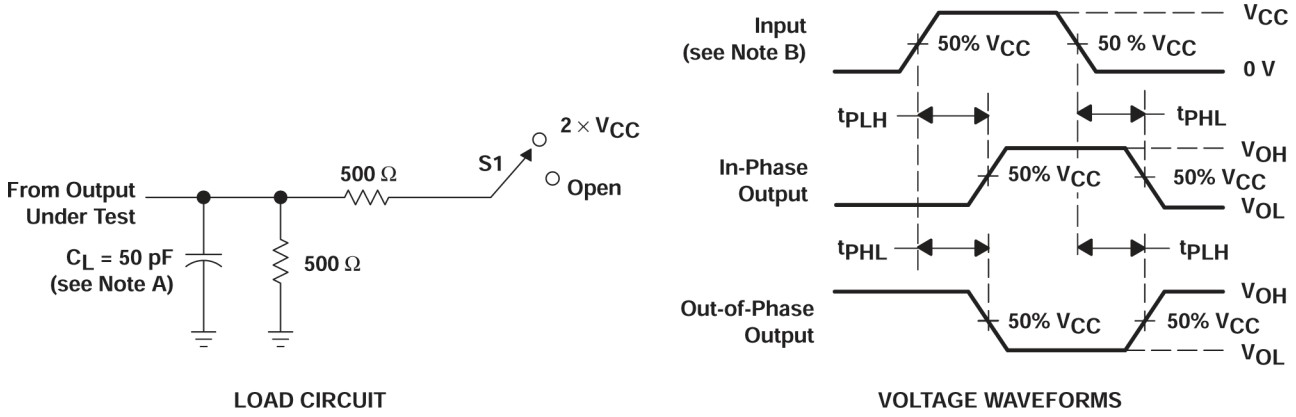

LOAD CIRCUIT VOLTAGE WAVEFORMS

A. C_L includes probe and jig capacitance.

B. All input pulses are supplied by generators having the following characteristics: PRR ⩽ 1 MHz, Z_O = 50 Ω, t_r v 2.5 ns, t_f v 2.5 ns.

C. The outputs are measured one at a time with one input transition per measurement.

图 5-1. Load Circuit and Voltage Waveforms

TEST	S1
t_{PLH}/t_{PHL}	Open

Copyright © 2025 Texas Instruments Incorporated

6 Detailed Description

6.1 Functional Block Diagram



图 6-1. Logic Diagram, Each Gate (Positive Logic)

6.2 Device Functional Modes

表 6-1. Function Table (Each Gate)

INPUTS		OUTPUT Y
A	B	
H	H	H
L	X	L
X	L	L

7 Application and Implementation

备注

以下应用部分中的信息不属于 TI 器件规格的范围，TI 不担保其准确性和完整性。TI 的客 户应负责确定器件是否适用于其应用。客户应验证并测试其设计，以确保系统功能。

7.1 Power Supply Recommendations

The power supply can be any voltage between the minimum and maximum supply voltage rating located in the *Recommended Operating Conditions*. Each V_{CC} terminal should have a bypass capacitor to prevent power disturbance. A 0.1-μF capacitor is recommended for this device. It is acceptable to parallel multiple bypass caps to reject different frequencies of noise. The 0.1-μF and 1-μF capacitors are commonly used in parallel. The bypass capacitor should be installed as close to the power terminal as possible for best results.

7.2 Layout

7.2.1 Layout Guidelines

When using multiple-input and multiple-channel logic devices inputs must not ever be left floating. In many cases, functions or parts of functions of digital logic devices are unused; for example, when only two inputs of a triple-input AND gate are used. Such unused input pins must not be left unconnected because the undefined voltages at the outside connections result in undefined operational states. All unused inputs of digital logic devices must be connected to a logic high or logic low voltage, as defined by the input voltage specifications, to prevent them from floating. The logic level that must be applied to any particular unused input depends on the function of the device. Generally, the inputs are tied to GND or V_{CC}, whichever makes more sense for the logic function or is more convenient.

7.2.2 Layout Example

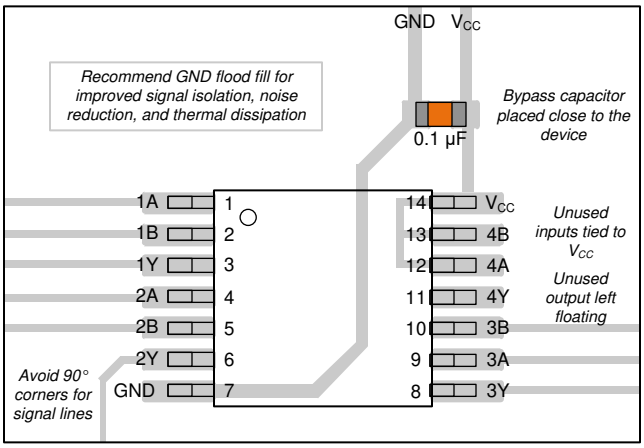

图 7-1. Example layout for the SN74AC08

Copyright © 2025 Texas Instruments Incorporated

8 Device and Documentation Support

8.1 Documentation Support (Analog)

8.1.1 Related Links

The table below lists quick access links. Categories include technical documents, support and community resources, tools and software, and quick access to sample or buy.

PARTS	PRODUCT FOLDER	SAMPLE & BUY	TECHNICAL DOCUMENTS	TOOLS & SOFTWARE	SUPPORT & COMMUNITY
SN54AC08	Click here	Click here	Click here	Click here	Click here
SN74AC08	Click here	Click here	Click here	Click here	Click here

8.2 接收文档更新通知

要接收文档更新通知，请导航至 ti.com 上的器件产品文件夹。点击*通知* 进行注册，即可每周接收产品信息更改摘要。有关更改的详细信息，请查看任何已修订文档中包含的修订历史记录。

8.3 支持资源

TI E2E™ 中文支持论坛是工程师的重要参考资料，可直接从专家处获得快速、经过验证的解答和设计帮助。搜索现有解答或提出自己的问题，获得所需的快速设计帮助。

链接的内容由各个贡献者“按原样”提供。这些内容并不构成 TI 技术规范，并且不一定反映 TI 的观点；请参阅 TI 的使用条款。

8.4 Trademarks

TI E2E™ is a trademark of Texas Instruments.
所有商标均为其各自所有者的财产。

8.5 静电放电警告



静电放电 (ESD) 会损坏这个集成电路。德州仪器 (TI) 建议通过适当的预防措施处理所有集成电路。如果不遵守正确的处理和安装程序，可能会损坏集成电路。

ESD 的损坏小至导致微小的性能降级，大至整个器件故障。精密的集成电路可能更容易受到损坏，这是因为非常细微的参数更改都可能会导致器件与其发布的规格不相符。

8.6 术语表

TI 术语表　　本术语表列出并解释了术语、首字母缩略词和定义。

9 Revision History

注：以前版本的页码可能与当前版本的页码不同

Changes from Revision E (July 2024) to Revision F (February 2025)	Page
• 向*封装信息* 表、*引脚配置和功能* 部分以及*热性能信息* 表中添加了 BQA 封装	1

Changes from Revision D (October 2003) to Revision E (July 2024)	Page
• 添加了*器件信息* 表、*引脚功能* 表、*热性能信息* 表、*器件功能模式*、*应用和实施* 部分、*器件和文档支持* 部分以及*机械、封装和可订购信息* 部分	1
• Updated R θ JA values: D = 86 to 119.9, PW = 113 to 145.7, all values in °C/W	6

Copyright © 2025 Texas Instruments Incorporated

10 Mechanical, Packaging, and Orderable Information

The following pages include mechanical, packaging, and orderable information. This information is the most current data available for the designated devices. This data is subject to change without notice and revision of this document. For browser-based versions of this data sheet, refer to the left-hand navigation.

Copyright © 2025 Texas Instruments Incorporated

PACKAGING INFORMATION

Orderable part number	Status (1)	Material type (2)	Package | Pins	Package qty | Carrier	RoHS (3)	Lead finish/ Ball material (4)	MSL rating/ Peak reflow (5)	Op temp (°C)	Part marking (6)
5962-87615012A	Last Time Buy	Production	LCCC (FK) | 20	55 | TUBE	No	SNPB	N/A for Pkg Type	-55 to 125	5962-87615012A SNJ54AC 08FK
5962-8761501CA	Active	Production	CDIP (J) | 14	25 | TUBE	No	SNPB	N/A for Pkg Type	-55 to 125	5962-8761501CA SNJ54AC08J
5962-8761501DA	Active	Production	CFP (W) | 14	25 | TUBE	No	SNPB	N/A for Pkg Type	-55 to 125	5962-8761501DA SNJ54AC08W
SN74AC08BQAR	Active	Production	WQFN (BQA) | 14	3000 | LARGE T&R	Yes	NIPDAU	Level-1-260C-UNLIM	-40 to 85	AC08
SN74AC08BQAR.A	Active	Production	WQFN (BQA) | 14	3000 | LARGE T&R	Yes	NIPDAU	Level-1-260C-UNLIM	-40 to 85	AC08
SN74AC08D	Obsolete	Production	SOIC (D) | 14	-	-	Call TI	Call TI	-40 to 85	AC08
SN74AC08DBR	Active	Production	SSOP (DB) | 14	2000 | LARGE T&R	Yes	NIPDAU	Level-1-260C-UNLIM	-40 to 85	AC08
SN74AC08DBR.A	Active	Production	SSOP (DB) | 14	2000 | LARGE T&R	Yes	NIPDAU	Level-1-260C-UNLIM	-40 to 85	AC08
SN74AC08DR	Active	Production	SOIC (D) | 14	2500 | LARGE T&R	Yes	NIPDAU	Level-1-260C-UNLIM	-40 to 85	AC08
SN74AC08DR.A	Active	Production	SOIC (D) | 14	2500 | LARGE T&R	Yes	NIPDAU	Level-1-260C-UNLIM	-40 to 85	AC08
SN74AC08N	Active	Production	PDIP (N) | 14	25 | TUBE	Yes	NIPDAU	N/A for Pkg Type	-40 to 85	SN74AC08N
SN74AC08N.A	Active	Production	PDIP (N) | 14	25 | TUBE	Yes	NIPDAU	N/A for Pkg Type	-40 to 85	SN74AC08N
SN74AC08NSR	Active	Production	SOP (NS) | 14	2000 | LARGE T&R	Yes	NIPDAU	Level-1-260C-UNLIM	-40 to 85	AC08
SN74AC08NSR.A	Active	Production	SOP (NS) | 14	2000 | LARGE T&R	Yes	NIPDAU	Level-1-260C-UNLIM	-40 to 85	AC08
SN74AC08PW	Obsolete	Production	TSSOP (PW) | 14	-	-	Call TI	Call TI	-40 to 85	AC08
SN74AC08PWR	Active	Production	TSSOP (PW) | 14	2000 | LARGE T&R	Yes	NIPDAU | SN	Level-1-260C-UNLIM	-40 to 85	AC08
SN74AC08PWR.A	Active	Production	TSSOP (PW) | 14	2000 | LARGE T&R	Yes	NIPDAU	Level-1-260C-UNLIM	-40 to 85	AC08
SN74AC08PWRG4	Active	Production	TSSOP (PW) | 14	2000 | LARGE T&R	Yes	NIPDAU	Level-1-260C-UNLIM	-40 to 85	AC08
SN74AC08PWRG4.A	Active	Production	TSSOP (PW) | 14	2000 | LARGE T&R	Yes	NIPDAU	Level-1-260C-UNLIM	-40 to 85	AC08
SNJ54AC08FK	Last Time Buy	Production	LCCC (FK) | 20	55 | TUBE	No	SNPB	N/A for Pkg Type	-55 to 125	5962-87615012A SNJ54AC 08FK
SNJ54AC08FK.A	Last Time Buy	Production	LCCC (FK) | 20	55 | TUBE	No	SNPB	N/A for Pkg Type	-55 to 125	5962-87615012A SNJ54AC 08FK

Orderable part number	Status (1)	Material type (2)	Package | Pins	Package qty | Carrier	RoHS (3)	Lead finish/ Ball material (4)	MSL rating/ Peak reflow (5)	Op temp (°C)	Part marking (6)
SNJ54AC08J	Active	Production	CDIP (J) | 14	25 | TUBE	No	SNPB	N/A for Pkg Type	-55 to 125	5962-8761501CA SNJ54AC08J
SNJ54AC08J.A	Active	Production	CDIP (J) | 14	25 | TUBE	No	SNPB	N/A for Pkg Type	-55 to 125	5962-8761501CA SNJ54AC08J
SNJ54AC08W	Active	Production	CFP (W) | 14	25 | TUBE	No	SNPB	N/A for Pkg Type	-55 to 125	5962-8761501DA SNJ54AC08W
SNJ54AC08W.A	Active	Production	CFP (W) | 14	25 | TUBE	No	SNPB	N/A for Pkg Type	-55 to 125	5962-8761501DA SNJ54AC08W

(1) **Status:** For more details on status, see our product life cycle.

(2) **Material type:** When designated, preproduction parts are prototypes/experimental devices, and are not yet approved or released for full production. Testing and final process, including without limitation quality assurance, reliability performance testing, and/or process qualification, may not yet be complete, and this item is subject to further changes or possible discontinuation. If available for ordering, purchases will be subject to an additional waiver at checkout, and are intended for early internal evaluation purposes only. These items are sold without warranties of any kind.

(3) **RoHS values:** Yes, No, RoHS Exempt. See the TI RoHS Statement for additional information and value definition.

(4) **Lead finish/Ball material:** Parts may have multiple material finish options. Finish options are separated by a vertical ruled line. Lead finish/Ball material values may wrap to two lines if the finish value exceeds the maximum column width.

(5) **MSL rating/Peak reflow:** The moisture sensitivity level ratings and peak solder (reflow) temperatures. In the event that a part has multiple moisture sensitivity ratings, only the lowest level per JEDEC standards is shown. Refer to the shipping label for the actual reflow temperature that will be used to mount the part to the printed circuit board.

(6) **Part marking:** There may be an additional marking, which relates to the logo, the lot trace code information, or the environmental category of the part.

Multiple part markings will be inside parentheses. Only one part marking contained in parentheses and separated by a "~" will appear on a part. If a line is indented then it is a continuation of the previous line and the two combined represent the entire part marking for that device.

Important Information and Disclaimer: The information provided on this page represents TI's knowledge and belief as of the date that it is provided. TI bases its knowledge and belief on information provided by third parties, and makes no representation or warranty as to the accuracy of such information. Efforts are underway to better integrate information from third parties. TI has taken and continues to take reasonable steps to provide representative and accurate information but may not have conducted destructive testing or chemical analysis on incoming materials and chemicals. TI and TI suppliers consider certain information to be proprietary, and thus CAS numbers and other limited information may not be available for release.

In no event shall TI's liability arising out of such information exceed the total purchase price of the TI part(s) at issue in this document sold by TI to Customer on an annual basis.

OTHER QUALIFIED VERSIONS OF SN54AC08, SN74AC08 :

- Catalog : SN74AC08
- Automotive : SN74AC08-Q1, SN74AC08-Q1
- Enhanced Product : SN74AC08-EP, SN74AC08-EP
- Military : SN54AC08

NOTE: Qualified Version Definitions:

- Catalog - TI's standard catalog product
- Automotive - Q100 devices qualified for high-reliability automotive applications targeting zero defects
- Enhanced Product - Supports Defense, Aerospace and Medical Applications
- Military - QML certified for Military and Defense Applications

TAPE AND REEL INFORMATION

REEL DIMENSIONS

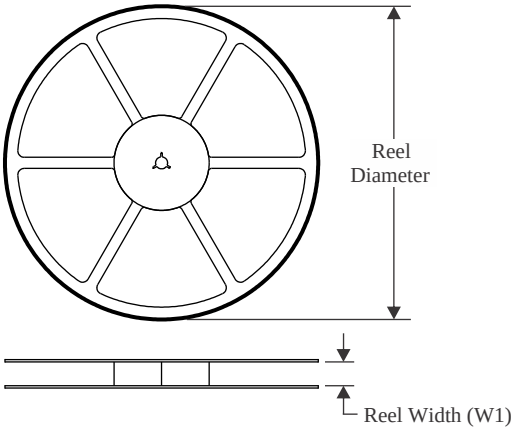

TAPE DIMENSIONS

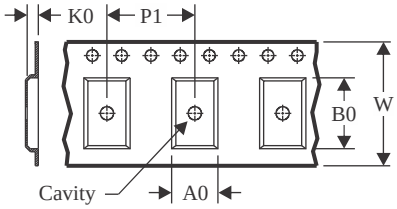

A0	Dimension designed to accommodate the component width
B0	Dimension designed to accommodate the component length
K0	Dimension designed to accommodate the component thickness
W	Overall width of the carrier tape
P1	Pitch between successive cavity centers

QUADRANT ASSIGNMENTS FOR PIN 1 ORIENTATION IN TAPE

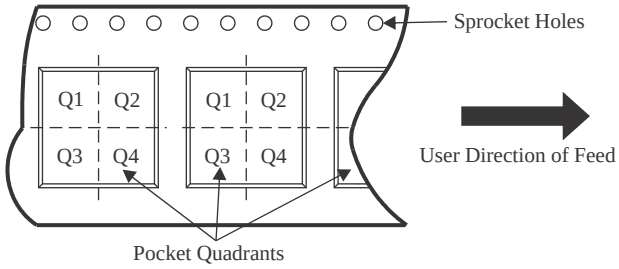

*All dimensions are nominal

Device	Package Type	Package Drawing	Pins	SPQ	Reel Diameter (mm)	Reel Width W1 (mm)	A0 (mm)	B0 (mm)	K0 (mm)	P1 (mm)	W (mm)	Pin1 Quadrant
SN74AC08BQAR	WQFN	BQA	14	3000	180.0	12.4	2.8	3.3	1.1	4.0	12.0	Q1
SN74AC08DBR	SSOP	DB	14	2000	330.0	16.4	8.35	6.6	2.4	12.0	16.0	Q1
SN74AC08NSR	SOP	NS	14	2000	330.0	16.4	8.1	10.4	2.5	12.0	16.0	Q1
SN74AC08PWR	TSSOP	PW	14	2000	330.0	12.4	6.9	5.6	1.6	8.0	12.0	Q1
SN74AC08PWRG4	TSSOP	PW	14	2000	330.0	12.4	6.9	5.6	1.6	8.0	12.0	Q1

TAPE AND REEL BOX DIMENSIONS

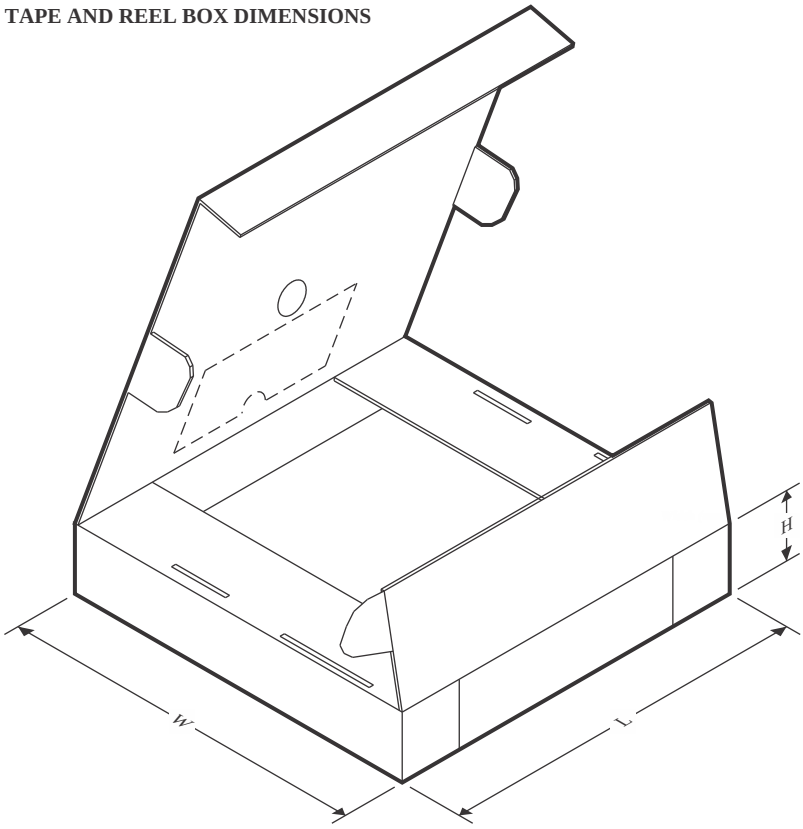

*All dimensions are nominal

Device	Package Type	Package Drawing	Pins	SPQ	Length (mm)	Width (mm)	Height (mm)
SN74AC08BQAR	WQFN	BQA	14	3000	210.0	185.0	35.0
SN74AC08DBR	SSOP	DB	14	2000	353.0	353.0	32.0
SN74AC08NSR	SOP	NS	14	2000	353.0	353.0	32.0
SN74AC08PWR	TSSOP	PW	14	2000	353.0	353.0	32.0
SN74AC08PWRG4	TSSOP	PW	14	2000	353.0	353.0	32.0

TUBE

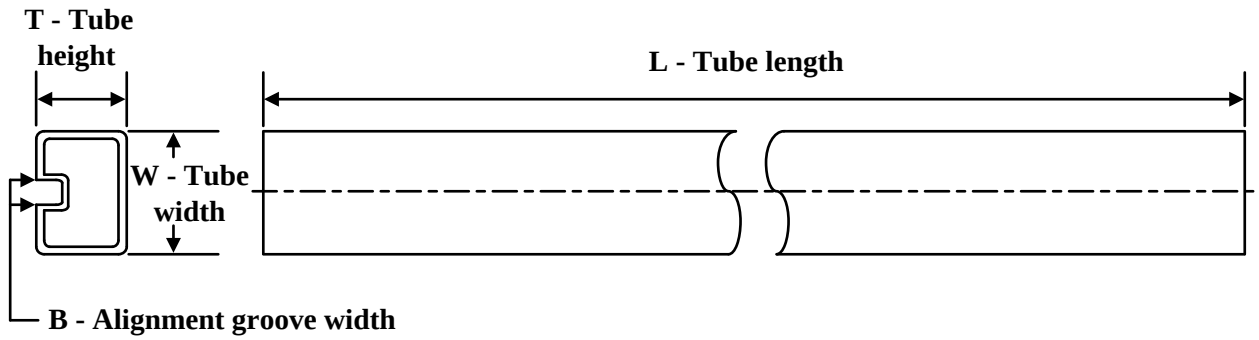

*All dimensions are nominal

Device	Package Name	Package Type	Pins	SPQ	L (mm)	W (mm)	T (µm)	B (mm)
5962-87615012A	FK	LCCC	20	55	506.98	12.06	2030	NA
5962-8761501DA	W	CFP	14	25	506.98	26.16	6220	NA
SN74AC08N	N	PDIP	14	25	506	13.97	11230	4.32
SN74AC08N	N	PDIP	14	25	506	13.97	11230	4.32
SN74AC08N.A	N	PDIP	14	25	506	13.97	11230	4.32
SN74AC08N.A	N	PDIP	14	25	506	13.97	11230	4.32
SNJ54AC08FK	FK	LCCC	20	55	506.98	12.06	2030	NA
SNJ54AC08FK.A	FK	LCCC	20	55	506.98	12.06	2030	NA
SNJ54AC08W	W	CFP	14	25	506.98	26.16	6220	NA
SNJ54AC08W.A	W	CFP	14	25	506.98	26.16	6220	NA

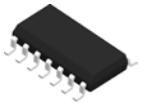

PACKAGE OUTLINE

D0014A

SOIC - 1.75 mm max height

SMALL OUTLINE INTEGRATED CIRCUIT

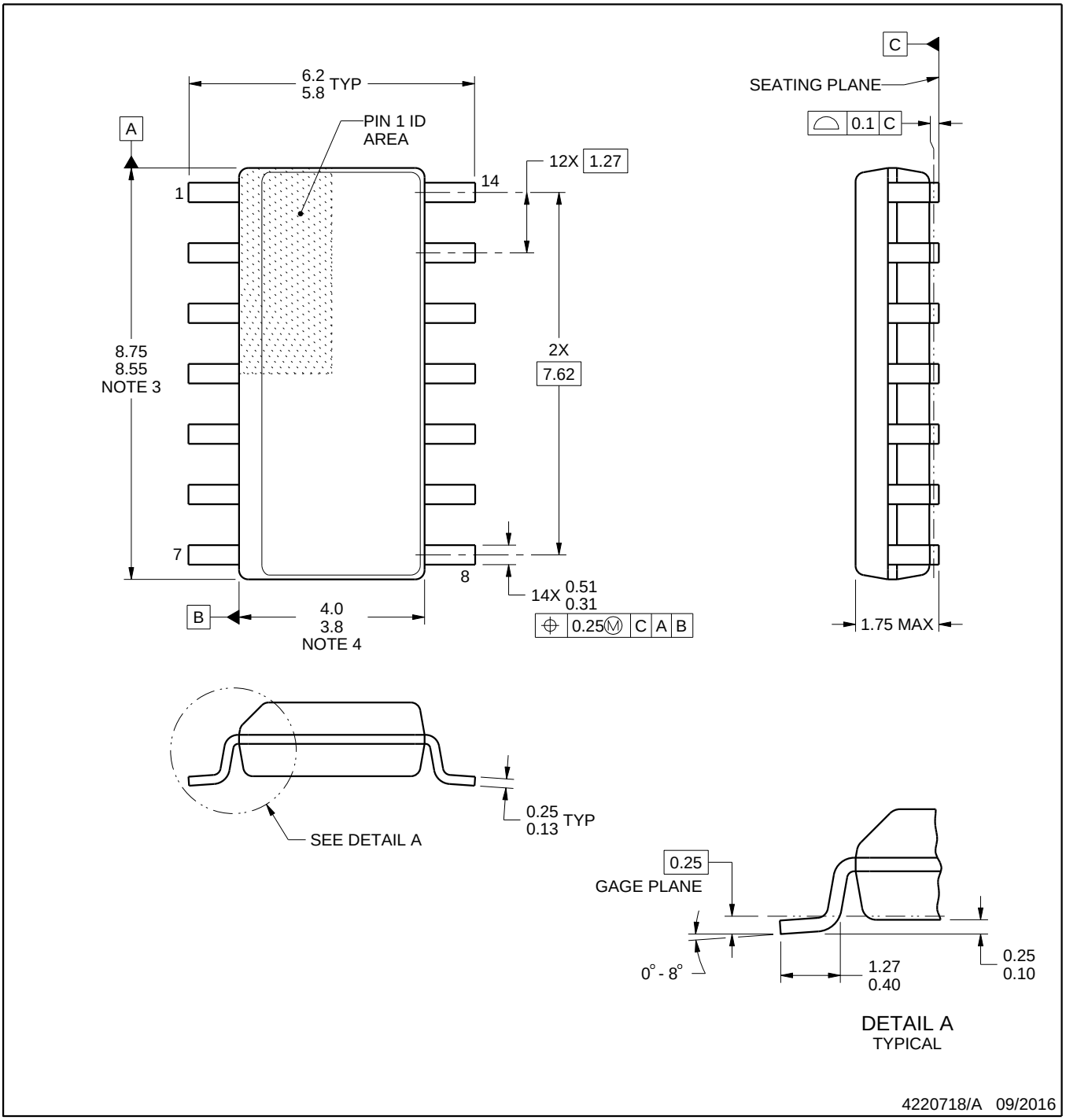

NOTES:

1. All linear dimensions are in millimeters. Dimensions in parenthesis are for reference only. Dimensioning and tolerancing per ASME Y14.5M.
2. This drawing is subject to change without notice.
3. This dimension does not include mold flash, protrusions, or gate burrs. Mold flash, protrusions, or gate burrs shall not exceed 0.15 mm, per side.
4. This dimension does not include interlead flash. Interlead flash shall not exceed 0.43 mm, per side.
5. Reference JEDEC registration MS-012, variation AB.

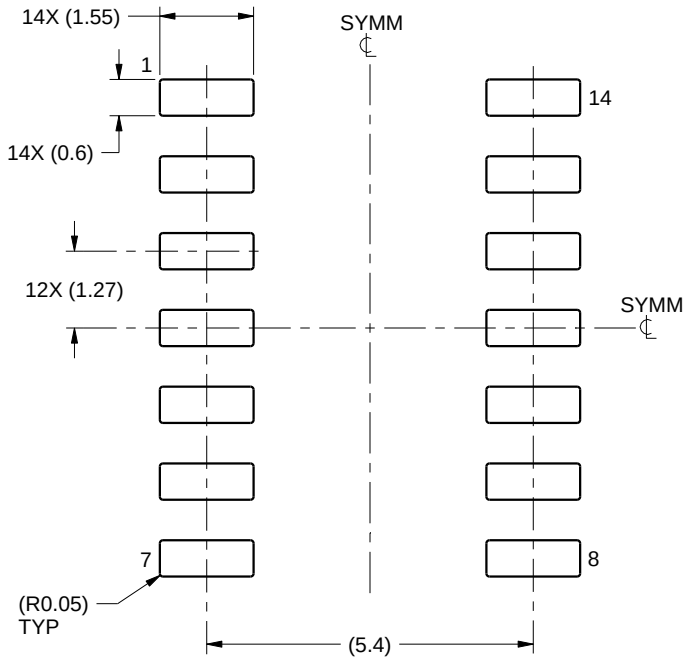

LAND PATTERN EXAMPLE
SCALE:8X

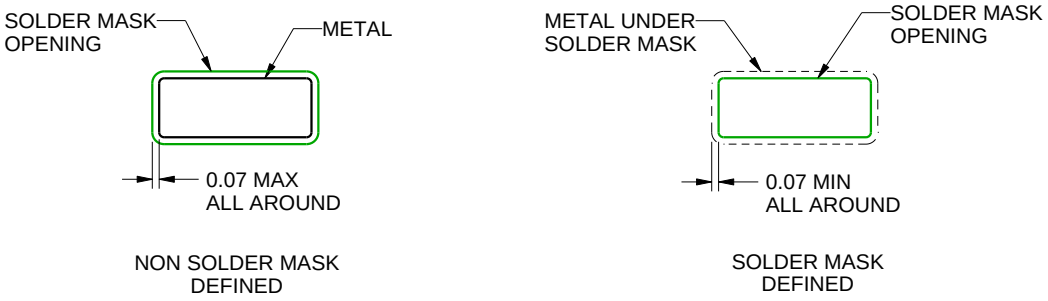

SOLDER MASK DETAILS

4220718/A 09/2016

NOTES: (continued)

6. Publication IPC-7351 may have alternate designs.
7. Solder mask tolerances between and around signal pads can vary based on board fabrication site.

EXAMPLE STENCIL DESIGN

D0014A

SOIC - 1.75 mm max height

SMALL OUTLINE INTEGRATED CIRCUIT

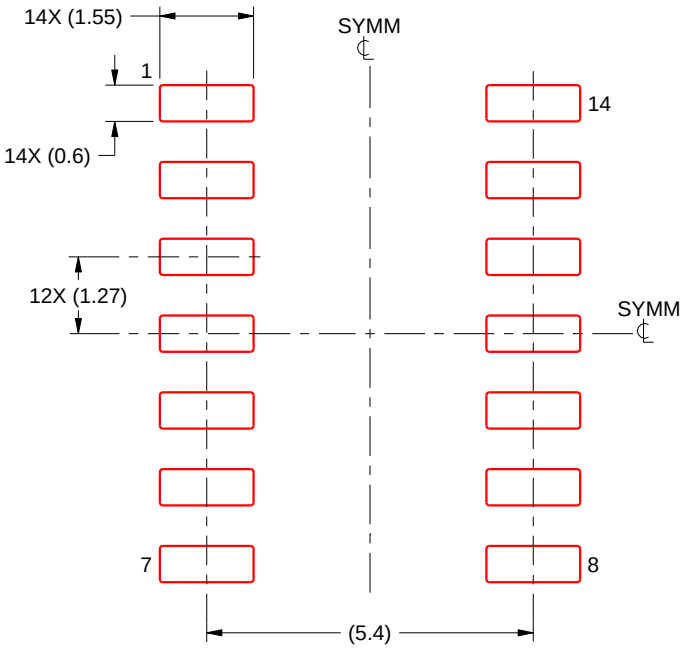

SOLDER PASTE EXAMPLE
BASED ON 0.125 mm THICK STENCIL
SCALE:8X

4220718/A 09/2016

NOTES: (continued)

8. Laser cutting apertures with trapezoidal walls and rounded corners may offer better paste release. IPC-7525 may have alternate design recommendations.
9. Board assembly site may have different recommendations for stencil design.

GENERIC PACKAGE VIEW

BQA 14

WQFN - 0.8 mm max height

2.5 x 3, 0.5 mm pitch

PLASTIC QUAD FLATPACK - NO LEAD

This image is a representation of the package family, actual package may vary.
Refer to the product data sheet for package details.

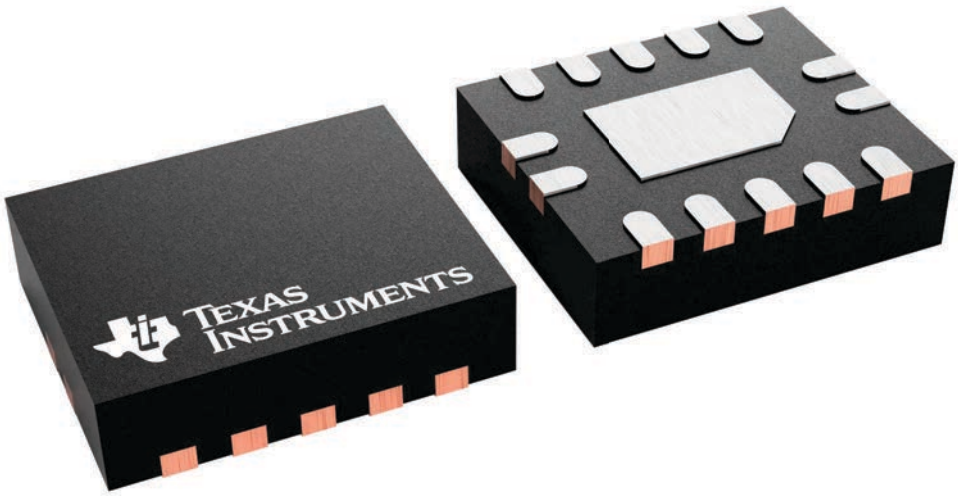

PACKAGE OUTLINE

BQA0014A

WQFN - 0.8 mm max height

PLASTIC QUAD FLAT PACK-NO LEAD

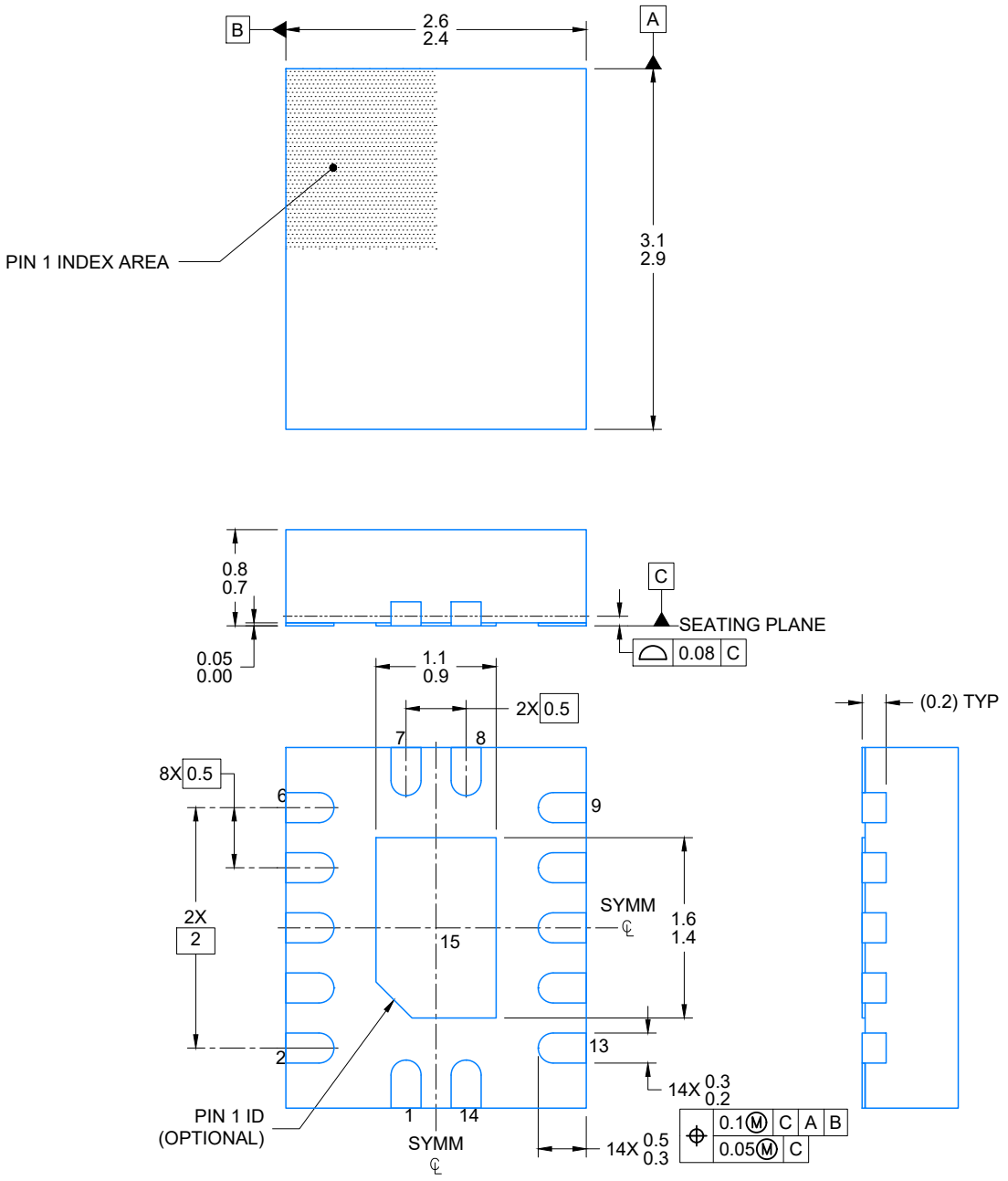

NOTES:

1. All linear dimensions are in millimeters. Any dimensions in parenthesis are for reference only. Dimensioning and tolerancing per ASME Y14.5M.
2. This drawing is subject to change without notice.
3. The package thermal pad must be soldered to the printed circuit board for optimal thermal and mechanical performance.

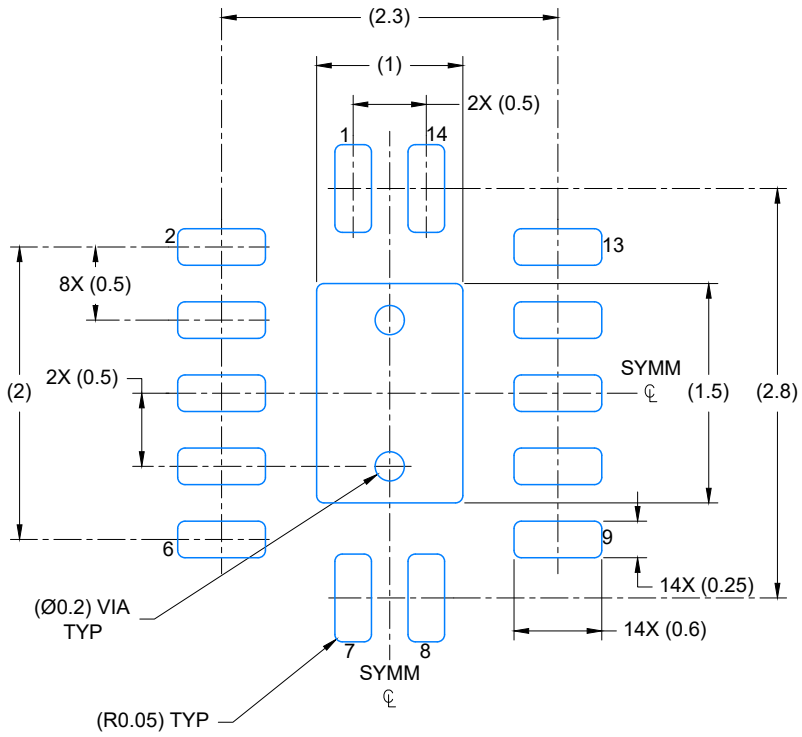

LAND PATTERN EXAMPLE
EXPOSED METAL SHOWN
SCALE: 20X

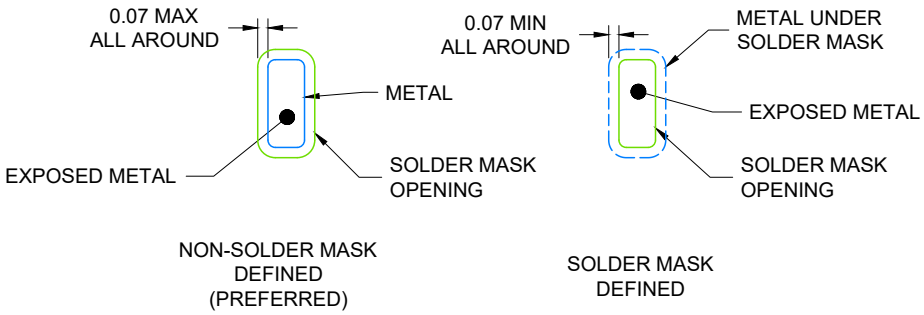

4224636/A 11/2018

NOTES: (continued)

4. This package is designed to be soldered to a thermal pad on the board. For more information, see Texas Instruments literature number SLUA271 (www.ti.com/lit/slua271).
5. Vias are optional depending on application, refer to device data sheet. If any vias are implemented, refer to their locations shown on this view. It is recommended that vias under paste be filled, plugged or tented.

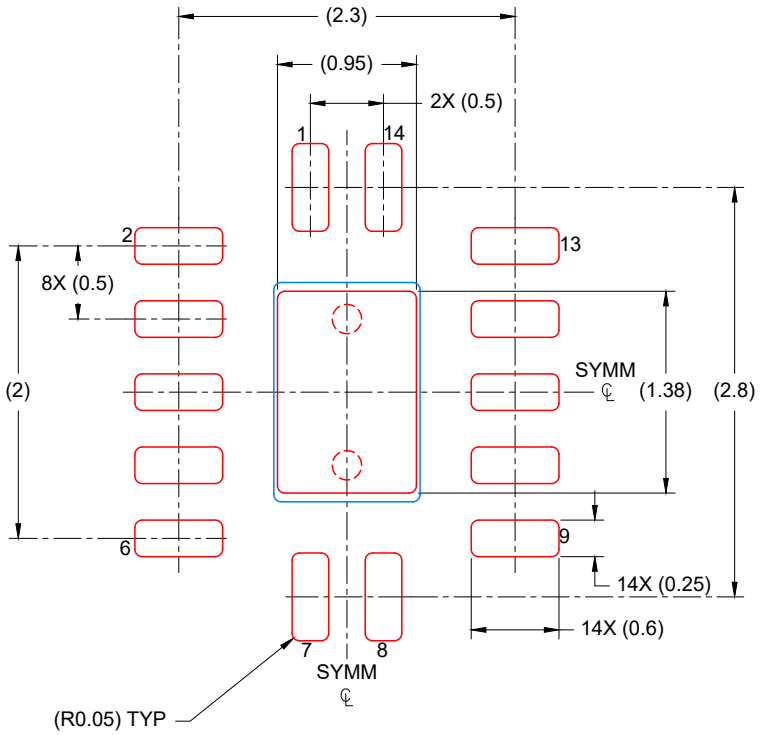

SOLDER PASTE EXAMPLE
BASED ON 0.125 mm THICK STENCIL

EXPOSED PAD
88% PRINTED COVERAGE BY AREA
SCALE: 20X

4224636/A 11/2018

NOTES: (continued)

6. Laser cutting apertures with trapezoidal walls and rounded corners may offer better paste release. IPC-7525 may have alternate design recommendations.

MECHANICAL DATA

NS (R-PDSO-G)** **PLASTIC SMALL-OUTLINE PACKAGE**

14-PINS SHOWN

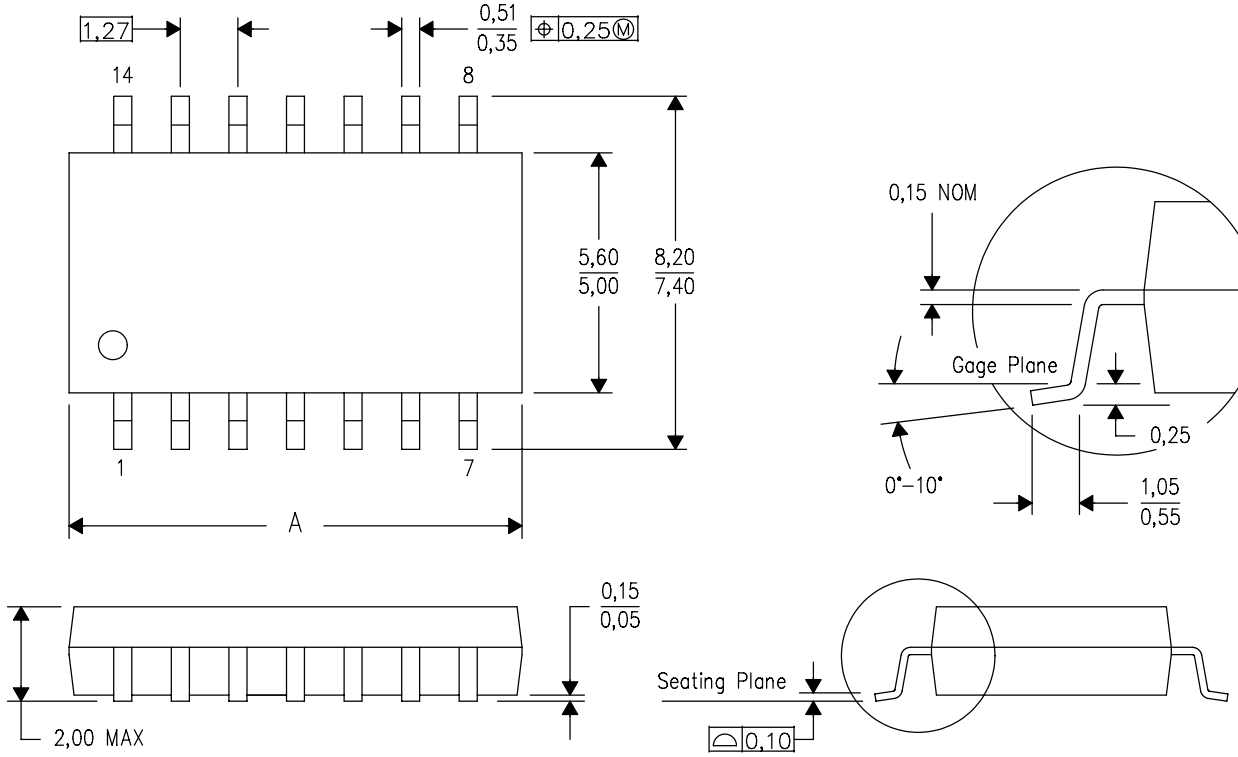

DIM \ PINS **	14	16	20	24
A MAX	10,50	10,50	12,90	15,30
A MIN	9,90	9,90	12,30	14,70

4040062/C 03/03

NOTES:
A. All linear dimensions are in millimeters.
B. This drawing is subject to change without notice.
C. Body dimensions do not include mold flash or protrusion, not to exceed 0,15.

W (R–GDFP–F14) CERAMIC DUAL FLATPACK

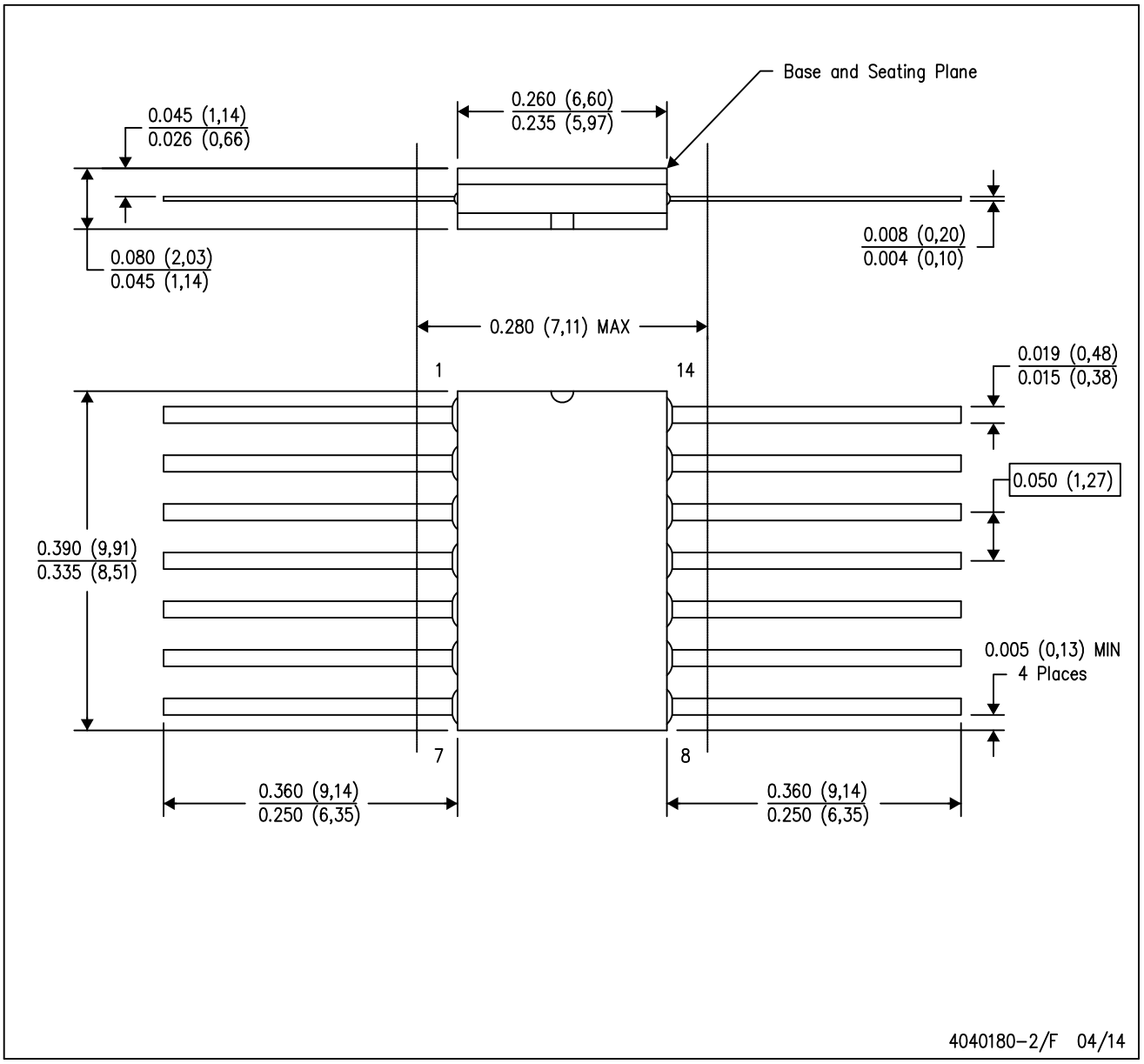

NOTES:
A. All linear dimensions are in inches (millimeters).
B. This drawing is subject to change without notice.
C. This package can be hermetically sealed with a ceramic lid using glass frit.
D. Index point is provided on cap for terminal identification only.
E. Falls within MIL STD 1835 GDFP1–F14

PACKAGE OUTLINE

DB0014A

SSOP - 2 mm max height

SMALL OUTLINE PACKAGE

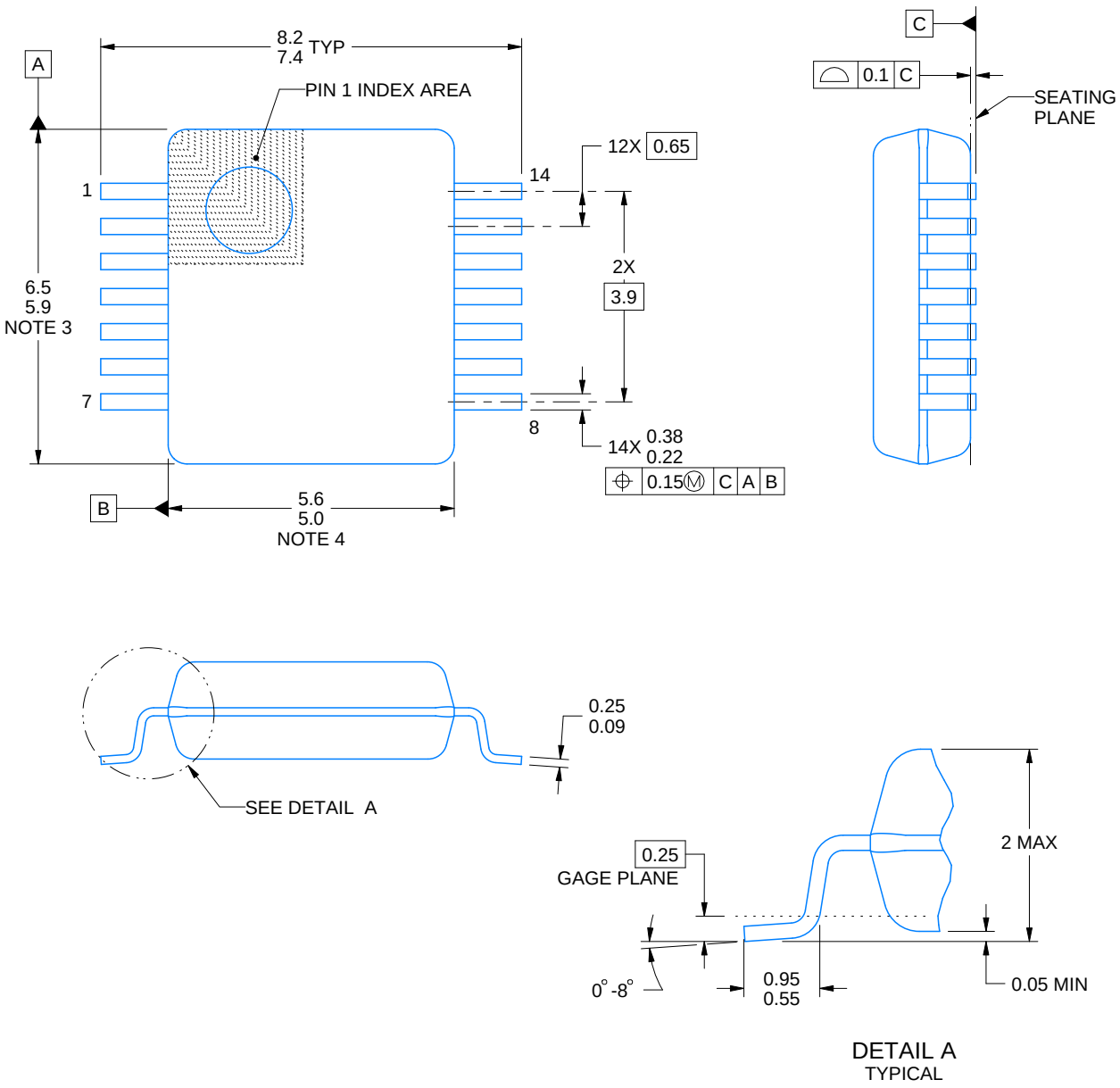

4220762/A 05/2024

NOTES:

1. All linear dimensions are in millimeters. Any dimensions in parenthesis are for reference only. Dimensioning and tolerancing per ASME Y14.5M.
2. This drawing is subject to change without notice.
3. This dimension does not include mold flash, protrusions, or gate burrs. Mold flash, protrusions, or gate burrs shall not exceed 0.15 mm per side.
4. Reference JEDEC registration MO-150.

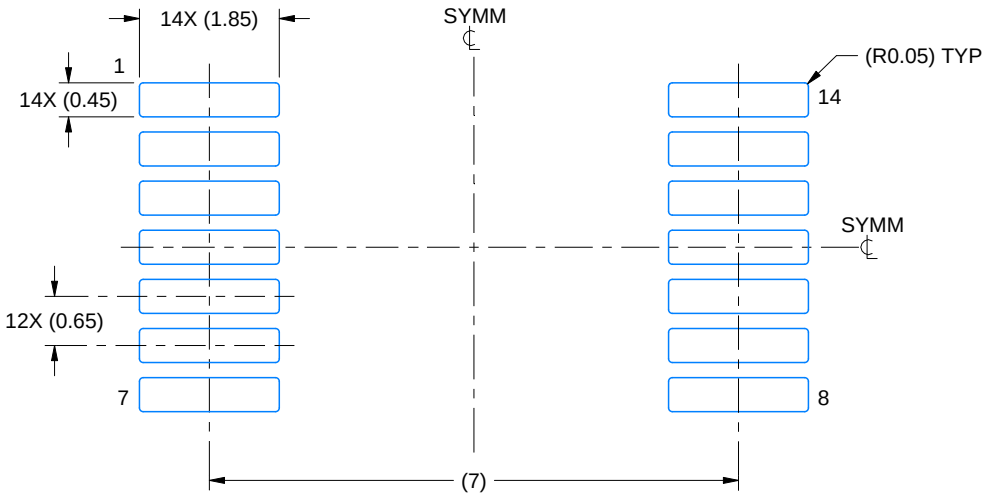

LAND PATTERN EXAMPLE
EXPOSED METAL SHOWN
SCALE: 10X

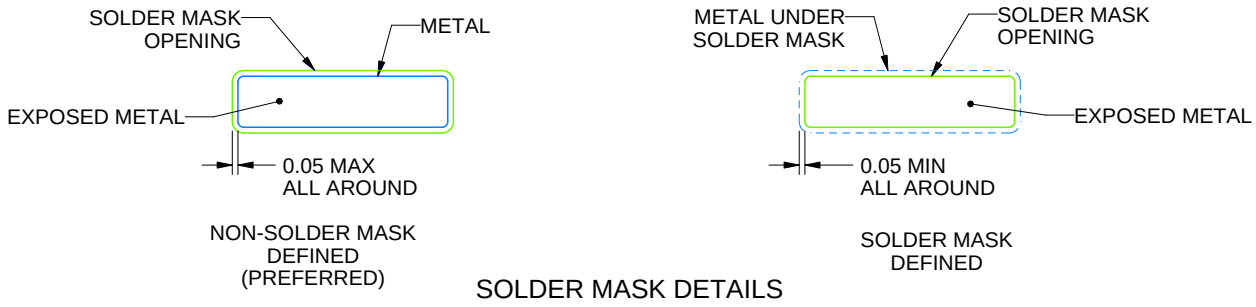

SOLDER MASK DETAILS

4220762/A 05/2024

NOTES: (continued)

5. Publication IPC-7351 may have alternate designs.
6. Solder mask tolerances between and around signal pads can vary based on board fabrication site.

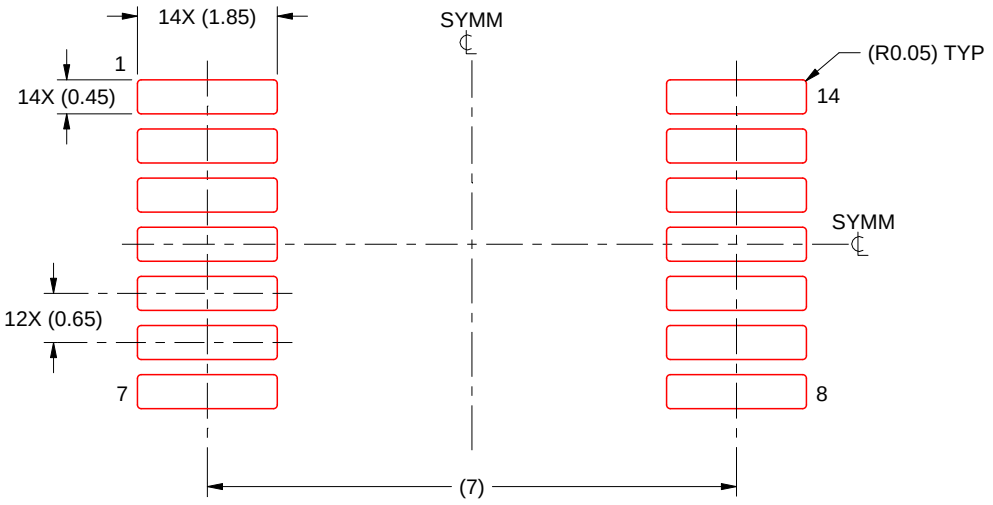

SOLDER PASTE EXAMPLE
BASED ON 0.125 mm THICK STENCIL
SCALE: 10X

4220762/A 05/2024

NOTES: (continued)

7. Laser cutting apertures with trapezoidal walls and rounded corners may offer better paste release. IPC-7525 may have alternate design recommendations.
8. Board assembly site may have different recommendations for stencil design.

GENERIC PACKAGE VIEW

FK 20

LCCC - 2.03 mm max height

8.89 x 8.89, 1.27 mm pitch

LEADLESS CERAMIC CHIP CARRIER

This image is a representation of the package family, actual package may vary.
Refer to the product data sheet for package details.

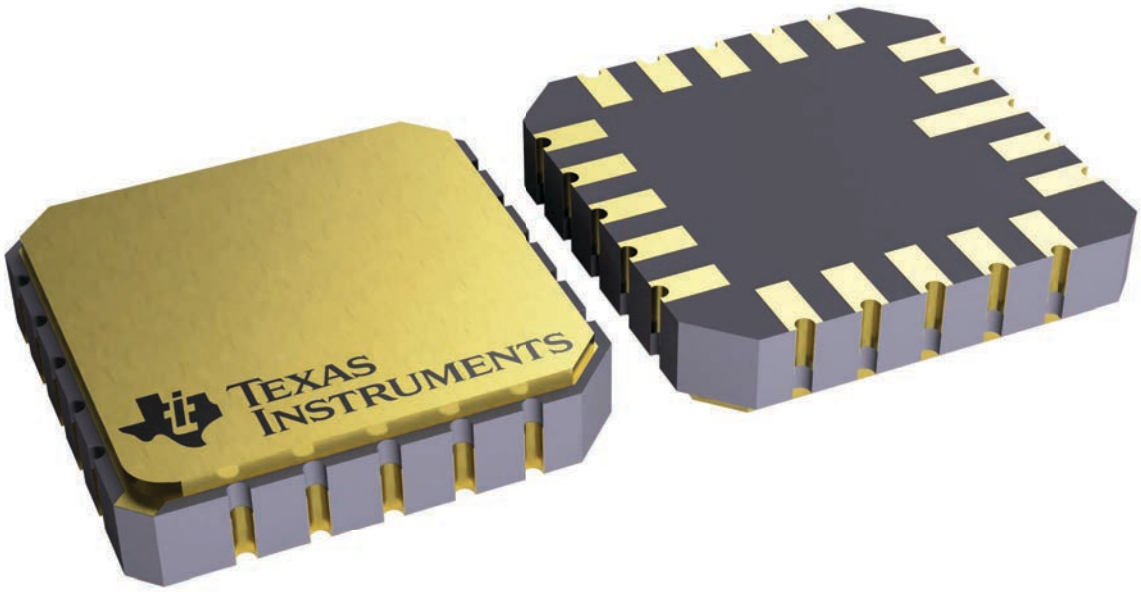

4229370VA\

GENERIC PACKAGE VIEW

J 14 CDIP - 5.08 mm max height

CERAMIC DUAL IN LINE PACKAGE

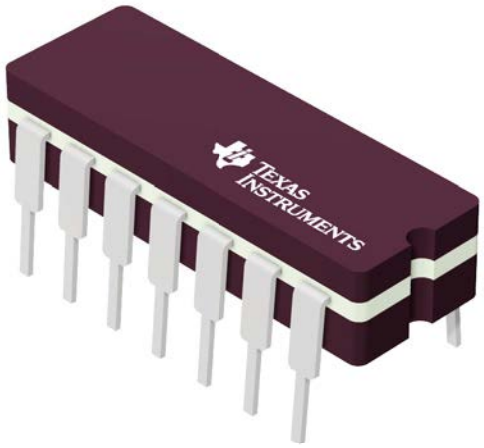

Images above are just a representation of the package family, actual package may vary.
Refer to the product data sheet for package details.

4040083-5/G



PACKAGE OUTLINE

J0014A

CDIP - 5.08 mm max height

CERAMIC DUAL IN LINE PACKAGE

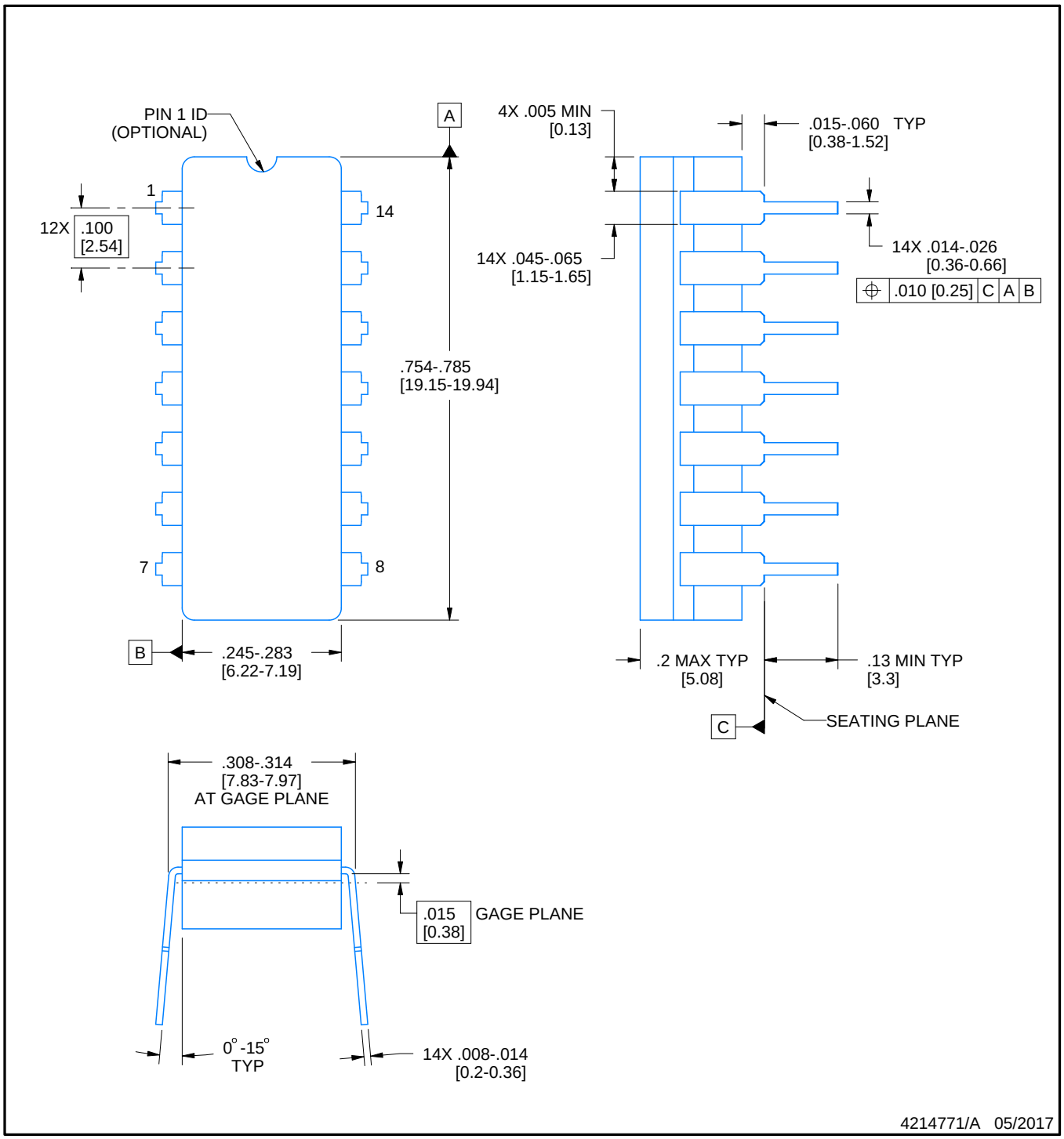

NOTES:

1. All controlling linear dimensions are in inches. Dimensions in brackets are in millimeters. Any dimension in brackets or parenthesis are for reference only. Dimensioning and tolerancing per ASME Y14.5M.
2. This drawing is subject to change without notice.
3. This package is hermitically sealed with a ceramic lid using glass frit.
4. Index point is provided on cap for terminal identification only and on press ceramic glass frit seal only.
5. Falls within MIL-STD-1835 and GDIP1-T14.

EXAMPLE BOARD LAYOUT

J0014A

CDIP - 5.08 mm max height

CERAMIC DUAL IN LINE PACKAGE

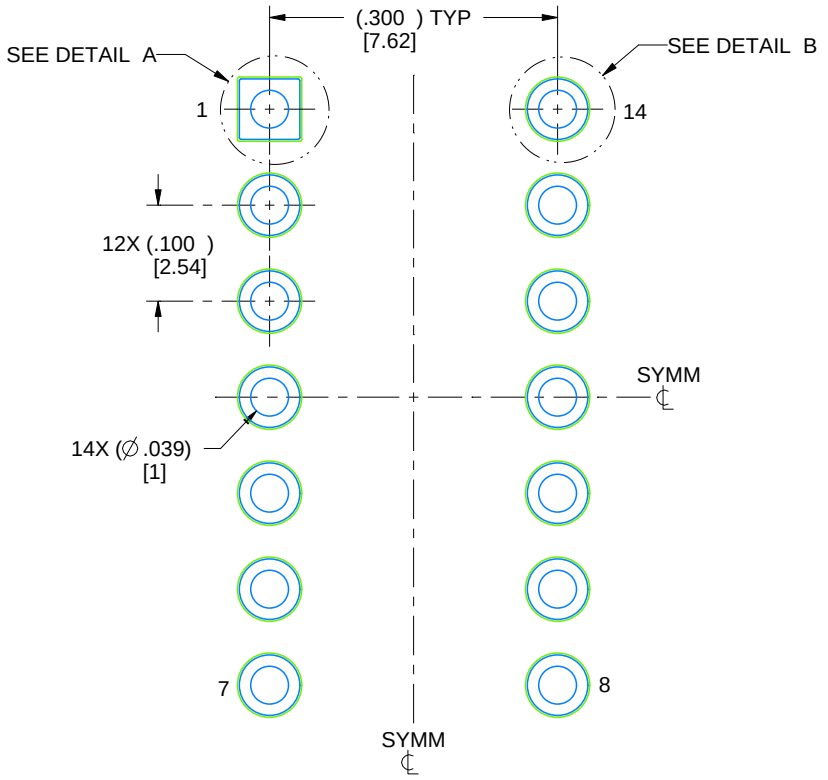

LAND PATTERN EXAMPLE
NON-SOLDER MASK DEFINED
SCALE: 5X

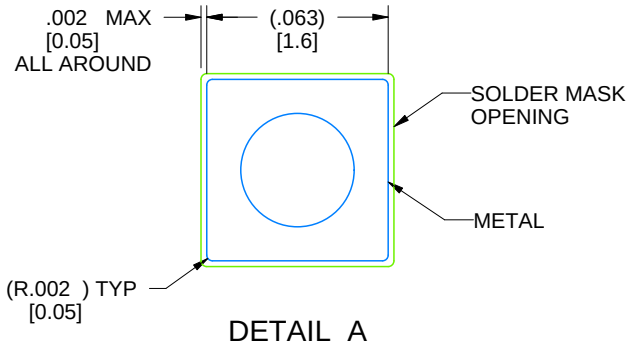

DETAIL A
SCALE: 15X

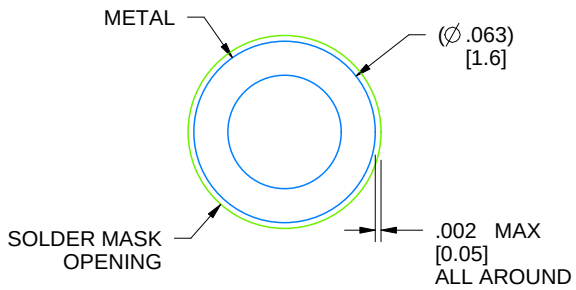

DETAIL B
13X, SCALE: 15X

4214771/A 05/2017

N (R–PDIP–T**)

PLASTIC DUAL–IN–LINE PACKAGE

16 PINS SHOWN

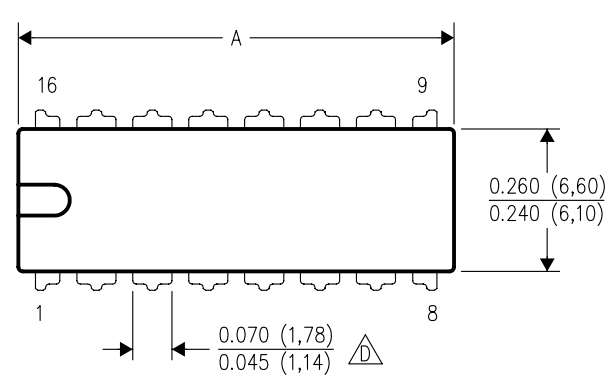

DIM \ PINS **	14	16	18	20
A MAX	0.775 (19,69)	0.775 (19,69)	0.920 (23,37)	1.060 (26,92)
A MIN	0.745 (18,92)	0.745 (18,92)	0.850 (21,59)	0.940 (23,88)
MS–001 VARIATION (C)	AA	BB	AC	AD

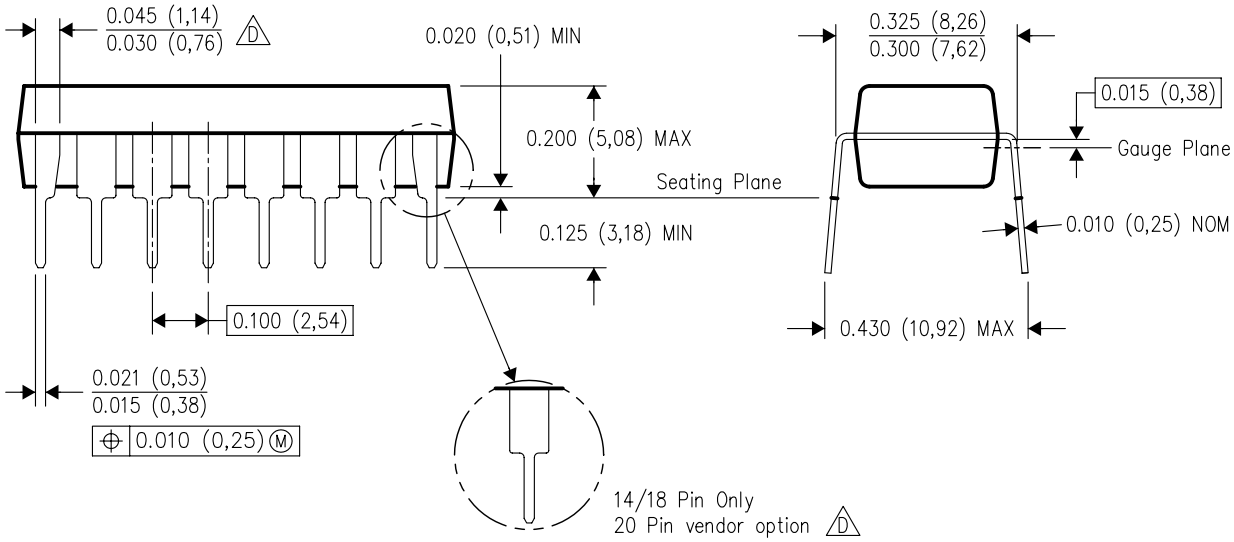

4040049/E 12/2002

NOTES:
A. All linear dimensions are in inches (millimeters).
B. This drawing is subject to change without notice.
C. Falls within JEDEC MS–001, except 18 and 20 pin minimum body length (Dim A).
D. The 20 pin end lead shoulder width is a vendor option, either half or full width.

PACKAGE OUTLINE

PW0014A

TSSOP - 1.2 mm max height

SMALL OUTLINE PACKAGE

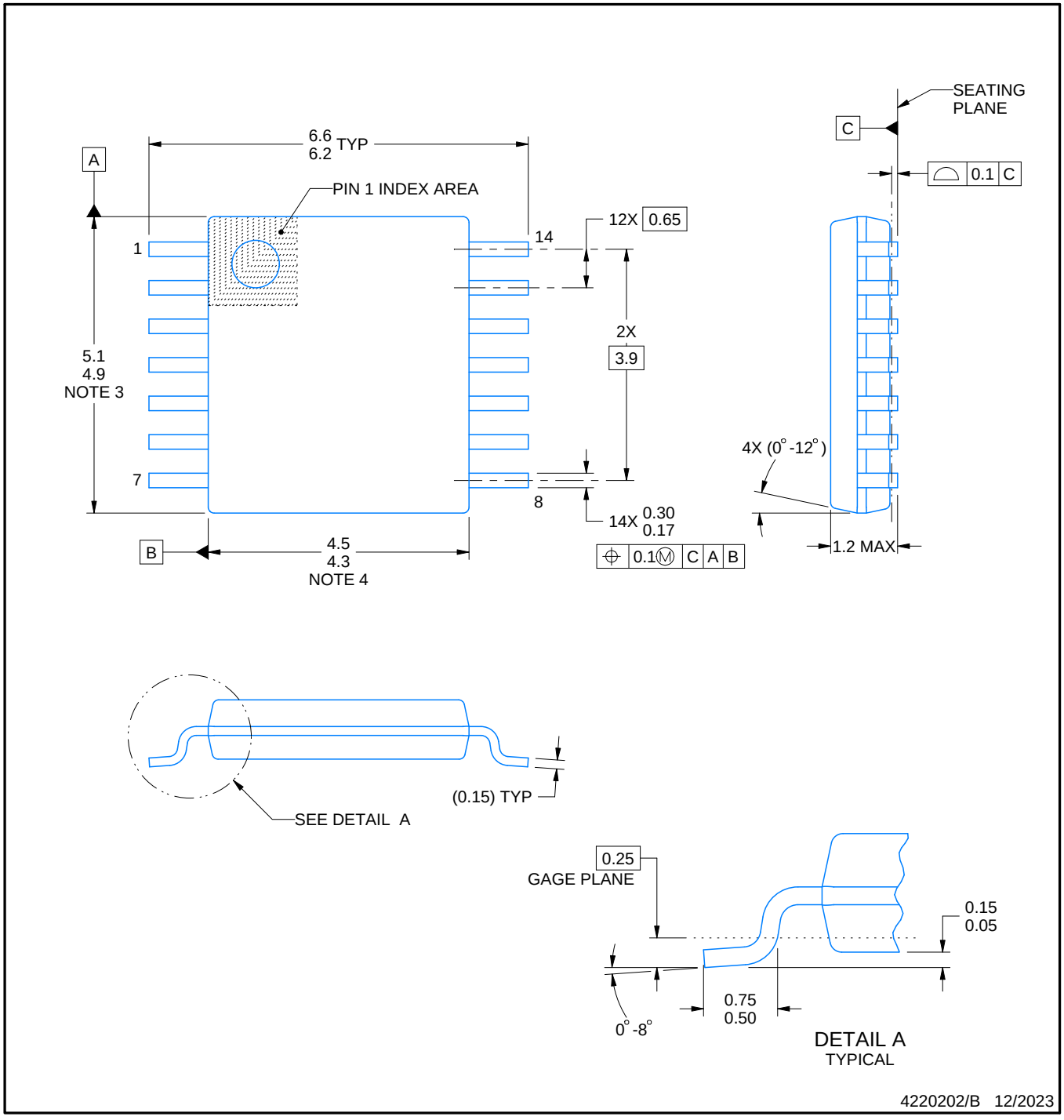

NOTES:

1. All linear dimensions are in millimeters. Any dimensions in parenthesis are for reference only. Dimensioning and tolerancing per ASME Y14.5M.
2. This drawing is subject to change without notice.
3. This dimension does not include mold flash, protrusions, or gate burrs. Mold flash, protrusions, or gate burrs shall not exceed 0.15 mm per side.
4. This dimension does not include interlead flash. Interlead flash shall not exceed 0.25 mm per side.
5. Reference JEDEC registration MO-153.

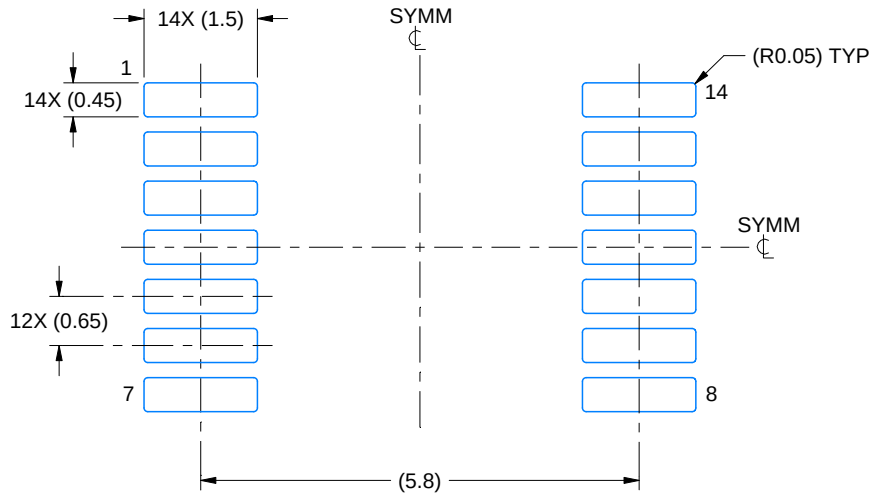

LAND PATTERN EXAMPLE
EXPOSED METAL SHOWN
SCALE: 10X

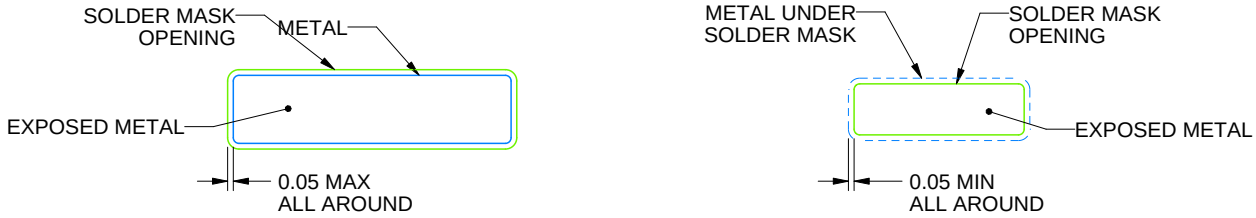

SOLDER MASK DETAILS

4220202/B 12/2023

NOTES: (continued)

6. Publication IPC-7351 may have alternate designs.
7. Solder mask tolerances between and around signal pads can vary based on board fabrication site.

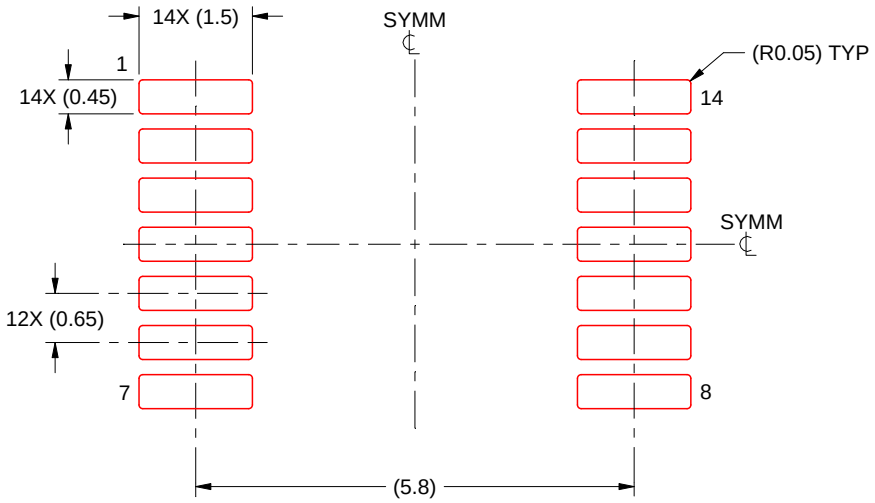

SOLDER PASTE EXAMPLE
BASED ON 0.125 mm THICK STENCIL
SCALE: 10X

4220202/B 12/2023

NOTES: (continued)

8. Laser cutting apertures with trapezoidal walls and rounded corners may offer better paste release. IPC-7525 may have alternate design recommendations.
9. Board assembly site may have different recommendations for stencil design.

重要通知和免责声明

TI“按原样”提供技术和可靠性数据（包括数据表）、设计资源（包括参考设计）、应用或其他设计建议、网络工具、安全信息和其他资源，不保证没有瑕疵且不做出任何明示或暗示的担保，包括但不限于对适销性、与某特定用途的适用性或不侵犯任何第三方知识产权的暗示担保。

这些资源可供使用 TI 产品进行设计的熟练开发人员使用。您将自行承担以下全部责任：(1) 针对您的应用选择合适的 TI 产品，(2) 设计、验证并测试您的应用，(3) 确保您的应用满足相应标准以及任何其他安全、安保法规或其他要求。

这些资源如有变更，恕不另行通知。TI 授权您仅可将这些资源用于研发本资源所述的 TI 产品的相关应用。严禁以其他方式对这些资源进行复制或展示。您无权使用任何其他 TI 知识产权或任何第三方知识产权。对于因您对这些资源的使用而对 TI 及其代表造成的任何索赔、损害、成本、损失和债务，您将全额赔偿，TI 对此概不负责。

TI 提供的产品受 TI 销售条款)、TI 通用质量指南 或 ti.com 上其他适用条款或 TI 产品随附的其他适用条款的约束。TI 提供这些资源并不会扩展或以其他方式更改 TI 针对 TI 产品发布的适用的担保或担保免责声明。 除非德州仪器 (TI) 明确将某产品指定为定制产品或客户特定产品，否则其产品均为按确定价格收入目录的标准通用器件。

TI 反对并拒绝您可能提出的任何其他或不同的条款。

版权所有 © 2026，德州仪器 (TI) 公司

最后更新日期：2025 年 10 月