SMOMAPL138B 低功率应用处理器

查询样品: SMOMAPL138B-HiRel

1 SMOMAPL138B 低功率应用处理器

1.1 特性

- 重点内容
  - 双核片载系统 (SoC)
    - 375MHz ARM926EJ-S™ 精简指令集 (RISC) 微处理器单元 (MPU)
    - 375MHz C674x 定点/浮点超长指令字 (VLIW) 数字信号处理器 (DSP)
  - 增强型直接内存访问控制器 (EDMA3)
  - 串行高级技术附件 (ATA)(SATA) 控制器
  - DDR2 / 移动 DDR 内存控制器
  - 2 个多媒体卡 (MMC) / 安全数字 (SD) 卡接口
  - LCD 控制器
  - 视频端口接口 (VPIF)
  - 10/100Mb/s 以太网媒介访问控制器 (EMAC)：
  - 可编程实时单元子系统
  - 3 个可配置通用异步接收发射器 (UART) 模块
  - 具有集成型物理层 (PHY) 的 USB 1.1 开放式主机控制器接口 (OHCI)（主机）
  - 具有集成型 PHY 的 USB 2.0 如影随形 (OTG) 端口
  - 一个多通道音频串行端口
  - 2 个多通道缓冲串行端口
- 双内核 SoC
  - 375MHz ARM926EJ-S™ RISC MPU
  - 375MHz C674x VLIW DSP
- ARM926EJ-S 核心
  - 32 位和 16 位 (Thumb®) 指令
  - DSP 指令扩展
  - 单周期 MAC
  - ARM® Jazelle® 技术
  - 用于实时调试的嵌入式 ICE-RT™
- ARM9 内存架构
  - 16K 字节指令高速缓存
  - 16K 字节数据高速缓存
  - 8K 字节 RAM（矢量表）
  - 64K 字节 ROM
- C674x 指令集特性
  - C67x+™ 和 C64x+™ ISA 扩展集
  - 多达 C674x 每秒处理百万条指令 (MIPS) / 每秒百万个浮点运算 (MFLOPS)
  - 可寻址字节（8 位/16 位/32 位/64 位数据）
  - 8 位溢出保护
  - 位域提取、设定、清空
  - 正常化、饱和、位计数
  - 紧凑 16 位指令
- C674x 2 级高速缓存存储器架构
  - 32K 字节 L1P 程序 RAM / 高速缓存
  - 32K 字节 L1D 数据 RAM / 高速缓存
  - 256K字节 L2 单一映射 RAM/ 高速缓存
  - 灵活 RAM / 高速缓存分区（L1 和 L2）
- 增强型直接内存访问控制器 3 (EDMA3)：
  - 2 个通道控制器
  - 3 个传输控制器
  - 64 个独立 DMA 通道
  - 16 个快速 DMA 通道
  - 可编程传输突发尺寸
- TMS320C674x 浮点 VLIW DSP 核心
  - 支持非对齐的载入/存回架构
  - 64 个通用寄存器（32 位）
  - 6 个算术逻辑单元 (ALU)（32/64 位）功能单元
    - 支持 32 位整数，SP（IEEE 单精度 / 32 位）和 DP（IEEE 双精度 / 64 位）浮点
    - 每时钟支持高达 4 个 SP 加法，每 2 个时钟支持 4 个 DP 加法
    - 每时钟支持高达 2 个浮点（SP 或者 DP）倒数逼近 (RCPxP) 和平方根倒数逼近 (RSQRxP) 运算
  - 2 个乘法功能单元
    - 混合精度 IEEE 浮点乘法支持高达：
      - 2 SP x SP -> SP 每时钟
      - 2 SP x SP -> DP 每 2 个时钟
      - 2 SP x DP -> DP 每 3 个时钟
      - 2 DP x DP -> DP 每 4 个时钟
    - 定点乘法每时钟支持 2 个 32 x 32 位乘法，4 个 16 x 16 位乘法，或者 8 个 8 x 8 位乘法，和复杂乘法
  - 指令压缩减少代码尺寸
  - 所有指令所需条件
  - 模块环路
    运行的硬件支持
  - 受保护模式运行
  - 对于错误检测和程序重定向的额外支持
- 软件支持
  - TI DSP/BIOS™

Please be aware that an important notice concerning availability, standard warranty, and use in critical applications of Texas Instruments semiconductor products and disclaimers thereto appears at the end of this data sheet.

TMS320C6000, C6000 are trademarks of Texas Instruments.
ARM926EJ-S is a trademark of ARM Limited.

PRODUCTION DATA information is current as of publication date. Products conform to specifications per the terms of the Texas Instruments standard warranty. Production processing does not necessarily include testing of all parameters.

版权 © 2011–2013, Texas Instruments Incorporated

  - 芯片支持库和 **DSP** 库
- **128K** 字节 **RAM** 共享内存
- **1.8V** 或 **3.3V** 低电压互补金属氧化物半导体 **(LVCMOS) IO**（**USB** 和**DDR2** 接口除外）
- **2** 个外部存储器接口：
  - **EMIFA**
    - **NOR**（**8/16** 位宽数据）
    - **NAND**（**8/16** 位宽数据）
    - 具有 **128MB** 地址空间的 **16** 位 **SDRAM**
  - **DDR2 /** 移动 **DDR** 内存控制器
    - 具有 **512MB** 地址空间的 **16** 位 **DDR2 SDRAM** 或者
    - 具有 **256MB** 地址空间的 **16** 位 **mDDR SDRAM**
- **3** 个可配置 **16550** 字节 **UART** 模块：
  - 含调制解调器 **(Modem)** 控制信号
  - **16** 字节先进先出 **(FIFO)**
  - **16x** 或者 **13x** 过度采样选项
- **LCD** 控制器
- **2** 个串行外设接口**(SPI)**每个接口具有多重芯片选择
- 两个多媒体卡 **(MMC) /** 安全数字 **(SD)** 卡接口和安全数据 **I/O (SDIO)** 接口
- 两个主**/**从集成电路间总线接口 **(I^2C Bus™)**
- 一个具有针对高带宽的 **16** 位宽多路复用地址**/**数据总线的主机端口接口 **(HPI)**
- 可编程实时单元子系统 **(PRUSS)**
  - **2** 个独立可编程实时单元 **(PRU)** 内核
    - **32** 位载入**/**存回 **RISC** 架构
    - 每内核 **4K** 字节指令 **RAM**
    - 每核心 **512** 字节数据 **RAM**
    - 为了省电，可通过软件将 **PRU** 子系统 **(PRUSS)** 关闭
    - 除了 **PRU** 核心的正常 **R31** 输出，每个 **PRU** 的寄存器 **30** 可从子系统中输出
  - 标准电源管理机制
    - 时钟选通
    - 在一个单一电源和睡眠控制器 **(PSC)** 时钟选通域下的整个子系统
  - 专用中断控制器
  - 专用开关型中心源
- 具有集成型 **PHY** 的 **USB 1.1 OHCI** （主机） **(USB1)**
- 具有集成型 **PHY** 的**USB 2.0 OTG (USB0)**
  - **USB 2.0** 高速**/**全速客户端
  - **USB 2.0** 高速**/**全速**/**低速主机
  - 端点 **0**（控制）
  - 端点 **1**，**2**，**3**，**4**（控制、批量、中断、或者 **ISOC**）**Rx** 和 **Tx**
- **1** 个多通道音频串行端口：
  - **2** 个时钟域和 **16** 个串行数据引脚
  - 支持时分复用 **(TDM)**，**I2S**，和相似格式
  - 支持动态互联网技术 **(DIT)**
  - 用于发射和接收的 **FIFO** 缓冲器
- **2** 个多通道缓冲串行端口：
  - 支持 **TDM**，**I2S**，和相似格式
  - **AC97** 音频编解码器接口
  - 电信接口（**ST** 总线，**H100**）
  - **128** 通道 **TDM**
  - 用于发送和接收的 **FIFO** 缓冲器
- **10/100Mb/s** 以太网 **MAC (EMAC)**：
  - **IEEE 802.3**兼容
  - **MII** 媒介独立接口
  - **RMII** 精简媒介独立接口
  - 管理数据 **I/O (MDIO)** 模块
- 视频端口接口 **(VPIF)**：
  - **2** 个 **8** 位 **SD (BT.656)**，单 **16** 位或者单一原始图像数据（**8** 位 **/10** 位 **/ 12** 位）视频捕捉通道
  - **2** 个 **8** 位 **SD (BT.656)**，单一 **16** 位视频显示通道
- 通用并行端口 **(uPP)**：
  - 到现场可编门阵列 **(FPGA)** 和数据转换器的高速并行接口
  - **2** 个通道中的每一个通道的数据宽度为 **8** 位至 **16** 位（含 **8** 位和 **16** 位）
  - 单一数据速率或者双数据速率传输
  - 支持含 **START**，**ENABLE** 和 **WAIT**（开始、使能和等待）控制的多重接口
- 串行 **ATA(SATA)** 控制器：
  - 支持 **SATA I (1.5Gbps)** 和 **SATA II (3.0Gbps)**
  - 支持所有 **SATA** 电源管理特性
  - 高达 **32** 条的硬件辅助本地命令序列 **(NCQ)**
  - 支持端口复用器和基于命令的开关
- 具有 **32kHz** 振荡器及分离电源轨的实时时钟
- **3**个 **64** 位通用定时器（每个定时器可被配置为两个 **32** 位定时器）
- **1** 个 **64** 位通用**/**看门狗定时器（可被配置为两个 **32** 位通用定时器）
- **2** 个增强型脉宽调制器 **(eHRPWM)**：
  - 含周期和频率控制的专用 **16** 位时基计数器
  - **6** 个单边，**6** 个双边对称或者 **3** 个双边不对称输出
  - 死区生成
  - 高频载波实现的脉宽调制 **(PWM)** 斩波
  - 触发区输入
- **3** 个 **32** 位增强型捕捉模块 **(eCAP)**：
  - 可配置为 **3** 个捕捉输入或者 **3** 个辅助脉宽调制器 **(APWM)** 输出
  - 多达 **4** 个事件时间戳的单脉冲捕捉
- **361** 焊球塑料球状引脚栅格阵列 **(PBGA)** 封装 **[GWT** 后缀**]**，**0.80mm** 焊球间距
- 商业、扩展或工业温度
- 社区资源
  - **TI E2E** 社区
  - **TI** 嵌入式处理器维基网页

版权 © 2011–2013, Texas Instruments Incorporated

1.2 商标

DSP/BIOS，TMS320C6000，C6000，TMS320，TMS320C62x 和 TMS320C67x 是德州仪器 (TI) 的商标。

所有商标均为其各自所有者所有。

该器件是一款基于 ARM926EJ-S™和 C674x DSP 内核的低功耗应用处理器。 它的功率远远低于使用 TMS320C6000™ 平台的其它 DSP 产品。

凭借全集成化混合处理器解决方案的极大灵活性，这款器件使得 OEM 和 ODM 公司能够快速地向市场投放拥有牢固可靠的操作系统支持、丰富的用户界面和高处理性能寿命的设备。

该器件的双核架构兼具 DSP 和精简指令集计算机 (RISC) 技术的优点， 采用了一个高性能 TMS320C674x DSP 内核及一个 ARM926EJ-S 内核。

ARM926EJ-S 是 32 位 RISC 处理器内核，可执行 32 位或 16 位指令和处理 32 位，16 位或 8 位数据。 该内核采用流水线结构，因此处理器和存储器系统的所有部件能够连续运作。

ARM 内核具有一个协处理器 15 (CP15)，保护模块和具有表格后援缓冲器的数据和程序内存管理单元 (MMU)。 它具有分离的 16K 字节指令高速缓存和 16K 字节数据高速缓存。 这两种高速缓存均与虚拟索引虚拟标签 (VIVT) 四路关联。 另外，ARM 内核还具有一个 8KB RAM （矢量表） 和 64KB ROM。

此器件的 DSP 核心使用 1 个基于 2 级快速缓存的架构。 1 级程序高速缓存 (L1P) 是 32KB 直接映射高速缓存，而 1 级数据高速缓存 (L1D) 则为 32KB 两路组相关联高速缓存。 2 级程序高速缓存 (L2P) 包含一个256KB 的内存空间，为程序空间和数据空间所共用。 L2 内存可被配置为映射内存、高速缓存或这两者的组合。 虽然 DSP L2 可由ARM 和系统中的其他主机进行存取，但在不影响 DSP 的性能的情况下，可为其他主机提供额外的 128kB RAM 共享内存。

外设集包括：一个具有管理数据输入/输出 (MDIO) 模块的 10/100Mb/s 以太网 MAC (EMAC)；一个 USB 2.0 OTG 接口；一个 USB 1.1 OHCI 接口；两个集成电路间 (I2C) 总线接口； 一个具有16个串行化器和 FIFO 缓冲器的多通道音频串行端口 (McASP)；两个具有 FIFO 缓冲器的多通道缓冲串行端口 (McBSP)；两个采用多种芯片选择信号的 SPI接口；4个均可配置的 64 位通用定时器（其中一个可被配置为看门狗）；一个可配置的 16 位主机端口接口 (HPI)；多达 9 组具有可编程中断/事件发生模式的 16 引脚通用输入/输出 (GPIO)，与其他外设进行多路复用；3个 UART接口（各具有$\overline{\text{RTS}}$和 $\overline{\text{CTS}}$）；两个增强型高分辨率脉宽调制器 (eHRPWM) 外设；3 个可被配置为 3 个捕获输入或 3 个辅助脉宽调制器 (APWM) 输出的 32 位增强型捕获 (eCAP) 模块外设；和两个外部存储器接口： 一个异步接口和用于较慢速内存或外设的 SDRAM 外部存储器接口 (EMIFA)，以及一个高速 DDR2 / 移动 DDR 控制器。

以太网媒体存取控制器 (EMAC) 在设备和网络之间提供了一个高效接口。 EMAC 支持 10Base-T 和 100Base-TX，即半双工或全双工模式中的 10M 比特/秒 (Mbps) 和 100Mbps。 此外，还为 PHY 配置提供了一个管理数据输入/输出 (MDIO) 接口。 EMAC 支持 MII 和 RMII 接口：

SATA 控制器提供了一个至海量数据存储设备的高速接口。 SATA 控制器支持 SATA I (1.5Gbps) 和 SATA II (3.0Gbps)。

通用并行端口 (uPP) 提供了一个至多种类型的数据转换器，现场可编程门阵列 (FPGA) 或其他并行器件的高速接口。 UPP 在两个通道上均支持 8 位至 16 位的可编程数据宽度。 单倍数据速率和双倍数据速率以及 START，ENABLE 和 WAIT 信号均得到支持，旨在提供对各种数据转换器的控制。

该器件包括一个视频端口接口 (VPIF)，从而提供了一种灵活的视频输入/输出端口。

丰富的外设集提供了控制外围设备以及与外部处理器进行通信的能力。 如需了解每种外设的详细信息，请查阅本文件后面的有关章节以及相关联的外设参考指南。

该器件拥有一套用于ARM 及DSP 的完整开发工具。 这些开发工具包括 C 语言编译器、用于简化程序设计和调度的 DSP 汇编优化器以及旨在将可视性引入源代码执行的 Windows™ 调试程序界面。

1.3 功能方框图

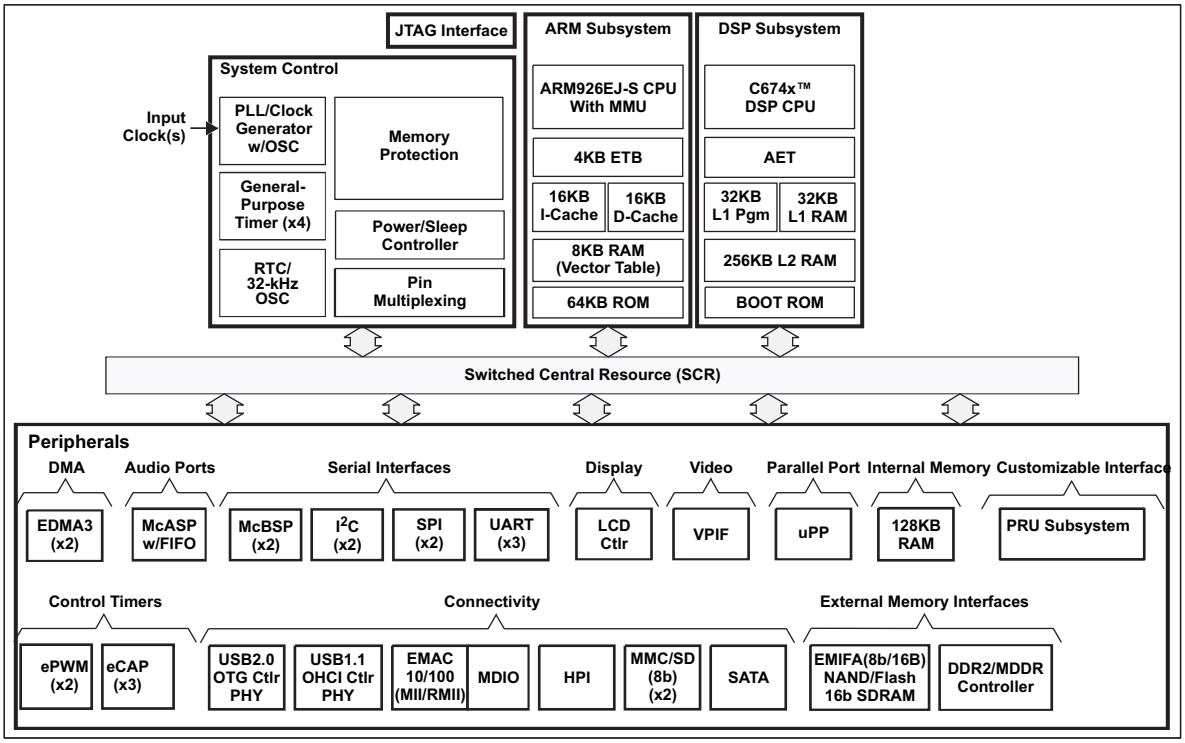

(1) 请注意：由于复用，不能同时支持所有外设。

图 **1-1.** 功能方框图

Copyright © 2011–2013, Texas Instruments Incorporated

2 Device Overview

2.1 Documentation Support

2.1.1 Related Documentation From Texas Instruments

The following documents are available on the Internet at www.ti.com. *Tip:* Enter the literature number in the search box provided at www.ti.com.

DSP Reference Guides

SPRUG82 ***TMS320C674x DSP Cache User's Guide.*** Explains the fundamentals of memory caches and describes how the two-level cache-based internal memory architecture in the TMS320C674x digital signal processor (DSP) can be efficiently used in DSP applications. Shows how to maintain coherence with external memory, how to use DMA to reduce memory latencies, and how to optimize your code to improve cache efficiency. The internal memory architecture in the C674x DSP is organized in a two-level hierarchy consisting of a dedicated program cache (L1P) and a dedicated data cache (L1D) on the first level. Accesses by the CPU to the these first level caches can complete without CPU pipeline stalls. If the data requested by the CPU is not contained in cache, it is fetched from the next lower memory level, L2 or external memory.

SPRUFE8 ***TMS320C674x DSP CPU and Instruction Set Reference Guide.*** Describes the CPU architecture, pipeline, instruction set, and interrupts for the TMS320C674x digital signal processors (DSPs). The C674x DSP is an enhancement of the C64x+ and C67x+ DSPs with added functionality and an expanded instruction set.

SPRUFK5 ***TMS320C674x DSP Megamodule Reference Guide.*** Describes the TMS320C674x digital signal processor (DSP) megamodule. Included is a discussion on the internal direct memory access (IDMA) controller, the interrupt controller, the power-down controller, memory protection, bandwidth management, and the memory and cache.

SPRUFK9 ***TMS320C674x/OMAP-L1x Processor Peripherals Overview Reference Guide.*** Provides an overview and briefly describes the peripherals available on the device.

SPRUGM7 ***SMOMAPL138B Applications Processor System Reference Guide .***

2.2 Device Characteristics

Table 2-1 provides an overview of the device. The table shows significant features of the device, including the capacity of on-chip RAM, peripherals, and the package type with pin count.

Table 2-1. Characteristics of SMOMAPL138B

HARDWARE FEATURES		SMOMAPL138B
Peripherals Not all peripherals pins are available at the same time (for more detail, see the Device Configurations section).	DDR2/mDDR Controller	DDR2, 16-bit bus width, up to 150 MHz Mobile DDR, 16-bit bus width, up to 133 MHz
	EMIFA	Asynchronous (8/16-bit bus width) RAM, Flash, 16-bit SDRAM, NOR, NAND
	Flash Card Interface	MMC and SD cards supported.
	EDMA3	64 independent channels, 16 QDMA channels, 2 channel controllers, 3 transfer controllers
	Timers	4 64-Bit General Purpose (each configurable as 2 separate 32-bit timers, one configurable as Watch Dog)
	UART	3 (each with RTS and CTS flow control)
	SPI	2 (Each with one hardware chip select)
	I^2C	2 (both Master/Slave)
	Multichannel Audio Serial Port [McASP]	1 (each with transmit/receive, FIFO buffer, 16 serializers)
	Multichannel Buffered Serial Port [McBSP]	2 (each with transmit/receive, FIFO buffer, 16)
	10/100 Ethernet MAC with Management Data I/O	1 (MII or RMII Interface)
	eHRPWM	4 Single Edge, 4 Dual Edge Symmetric, or 2 Dual Edge Asymmetric Outputs
	eCAP	3 32-bit capture inputs or 3 32-bit auxiliary PWM outputs
	USB 2.0 (USB0)	High-Speed OTG Controller with on-chip OTG PHY
	USB 1.1 (USB1)	Full-Speed OHCI (as host) with on-chip PHY
	General-Purpose Input/Output Port	9 banks of 16-bit
	LCD Controller	1
	SATA Controller	1 (Support both SATA I and SATAII)
	Universal Parallel Port (uPP)	1
	Video Port Interface (VPIF)	1 (video in and video out)
	PRU Subsystem (PRUSS)	2 Programmable PRU Cores
On-Chip Memory	Size (Bytes)	488KB RAM
	Organization	**DSP** 32KB L1 Program (L1P)/Cache (up to 32KB) 32KB L1 Data (L1D)/Cache (up to 32KB) 256KB Unified Mapped RAM/Cache (L2) DSP Memories can be made accessible to ARM, EDMA3, and other peripherals. **ARM** 16KB I-Cache 16KB D-Cache 8KB RAM (Vector Table) 64KB ROM **ADDITIONAL SHARED MEMORY** 128KB RAM
C674x CPU ID + CPU Rev ID	Control Status Register (CSR.[31:16])	0x1400
C674x Megamodule Revision	Revision ID Register (MM_REVID[15:0])	0x0000
JTAG BSDL_ID	DEVIDR0 Register	0x0B7D_102F
CPU Frequency	MHz	674x DSP 375 MHz (1.2V) or 456 MHz (1.3V)
		ARM926 375 MHz (1.2V) or 456 MHz (1.3V)
Voltage	Core (V)	1.2 V nominal for 375 MHz version 1.3 V nominal for 456 MHz version
	I/O (V)	1.8V or 3.3 V
Package		16 mm x 16 mm, 361-Ball 0.80 mm pitch, PBGA (GWT)

Copyright © 2011–2013, Texas Instruments Incorporated

Table 2-1. Characteristics of SMOMAPL138B (continued)

HARDWARE FEATURES		SMOMAPL138B
Product Status(1)	Product Preview (PP), Advance Information (AI), Production Data (PD), or Product Not Currently Available (NA)	375 MHz versions - PD 456 MHz versions - NA

(1) ADVANCE INFORMATION concerns new products in the sampling or preproduction phase of development. Characteristic data and other specifications are subject to change without notice. PRODUCTION DATA information is current as of publication date. Products conform to specifications per the terms of the Texas Instruments standard warranty. Production processing does not necessarily include testing of all parameters.

2.3 Device Compatibility

The ARM926EJ-S RISC CPU is compatible with other ARM9 CPUs from ARM Holdings plc.

The C674x DSP core is code-compatible with the C6000™ DSP platform and supports features of both the C64x+ and C67x+ DSP families.

2.4 ARM Subsystem

The ARM Subsystem includes the following features:

- ARM926EJ-S RISC processor
- ARMv5TEJ (32/16-bit) instruction set
- Little endian
- System Control Co-Processor 15 (CP15)
- MMU
- 16KB Instruction cache
- 16KB Data cache
- Write Buffer
- Embedded Trace Module and Embedded Trace Buffer (ETM/ETB)
- ARM Interrupt controller

2.4.1 ARM926EJ-S RISC CPU

The ARM Subsystem integrates the ARM926EJ-S processor. The ARM926EJ-S processor is a member of ARM9 family of general-purpose microprocessors. This processor is targeted at multi-tasking applications where full memory management, high performance, low die size, and low power are all important. The ARM926EJ-S processor supports the 32-bit ARM and 16 bit THUMB instruction sets, enabling the user to trade off between high performance and high code density. Specifically, the ARM926EJ-S processor supports the ARMv5TEJ instruction set, which includes features for efficient execution of Java byte codes, providing Java performance similar to Just in Time (JIT) Java interpreter, but without associated code overhead.

The ARM926EJ-S processor supports the ARM debug architecture and includes logic to assist in both hardware and software debug. The ARM926EJ-S processor has a Harvard architecture and provides a complete high performance subsystem, including:

- ARM926EJ -S integer core
- CP15 system control coprocessor
- Memory Management Unit (MMU)
- Separate instruction and data caches
- Write buffer
- Separate instruction and data (internal RAM) interfaces
- Separate instruction and data AHB bus interfaces
- Embedded Trace Module and Embedded Trace Buffer (ETM/ETB)

Copyright © 2011–2013, Texas Instruments Incorporated

For more complete details on the ARM9, refer to the ARM926EJ-S Technical Reference Manual, available at http://www.arm.com

2.4.2 CP15

The ARM926EJ-S system control coprocessor (CP15) is used to configure and control instruction and data caches, Memory Management Unit (MMU), and other ARM subsystem functions. The CP15 registers are programmed using the MRC and MCR ARM instructions, when the ARM in a privileged mode such as supervisor or system mode.

2.4.3 MMU

A single set of two level page tables stored in main memory is used to control the address translation, permission checks and memory region attributes for both data and instruction accesses. The MMU uses a single unified Translation Lookaside Buffer (TLB) to cache the information held in the page tables. The MMU features are:

- Standard ARM architecture v4 and v5 MMU mapping sizes, domains and access protection scheme.
- Mapping sizes are:
  - 1MB (sections)
  - 64KB (large pages)
  - 4KB (small pages)
  - 1KB (tiny pages)
- Access permissions for large pages and small pages can be specified separately for each quarter of the page (subpage permissions)
- Hardware page table walks
- Invalidate entire TLB, using CP15 register 8
- Invalidate TLB entry, selected by MVA, using CP15 register 8
- Lockdown of TLB entries, using CP15 register 10

2.4.4 Caches and Write Buffer

The size of the Instruction cache is 16KB, Data cache is 16KB. Additionally, the caches have the following features:

- Virtual index, virtual tag, and addressed using the Modified Virtual Address (MVA)
- Four-way set associative, with a cache line length of eight words per line (32-bytes per line) and with two dirty bits in the Dcache
- Dcache supports write-through and write-back (or copy back) cache operation, selected by memory region using the C and B bits in the MMU translation tables
- Critical-word first cache refilling
- Cache lockdown registers enable control over which cache ways are used for allocation on a line fill, providing a mechanism for both lockdown, and controlling cache corruption
- Dcache stores the Physical Address TAG (PA TAG) corresponding to each Dcache entry in the TAG RAM for use during the cache line write-backs, in addition to the Virtual Address TAG stored in the TAG RAM. This means that the MMU is not involved in Dcache write-back operations, removing the possibility of TLB misses related to the write-back address.
- Cache maintenance operations provide efficient invalidation of, the entire Dcache or Icache, regions of the Dcache or Icache, and regions of virtual memory.

The write buffer is used for all writes to a noncachable bufferable region, write-through region and write misses to a write-back region. A separate buffer is incorporated in the Dcache for holding write-back for cache line evictions or cleaning of dirty cache lines. The main write buffer has 16-word data buffer and a four-address buffer. The Dcache write-back has eight data word entries and a single address entry.

Copyright © 2011–2013, Texas Instruments Incorporated

2.4.5 Advanced High-Performance Bus (AHB)

The ARM Subsystem uses the AHB port of the ARM926EJ-S to connect the ARM to the Config bus and the external memories. Arbiters are employed to arbitrate access to the separate D-AHB and I-AHB by the Config Bus and the external memories bus.

2.4.6 Embedded Trace Macrocell (ETM) and Embedded Trace Buffer (ETB)

To support real-time trace, the ARM926EJ-S processor provides an interface to enable connection of an Embedded Trace Macrocell (ETM). The ARM926ES-J Subsystem in the device also includes the Embedded Trace Buffer (ETB). The ETM consists of two parts:

- Trace Port provides real-time trace capability for the ARM9.
- Triggering facilities provide trigger resources, which include address and data comparators, counter, and sequencers.

The device trace port is not pinned out and is instead only connected to the Embedded Trace Buffer. The ETB has a 4KB buffer memory. ETB enabled debug tools are required to read/interpret the captured trace data.

2.4.7 ARM Memory Mapping

By default the ARM has access to most on and off chip memory areas, including the DSP Internal memories, EMIFA, DDR2, and the additional 128K byte on chip shared SRAM. Likewise almost all of the on chip peripherals are accessible to the ARM by default.

See Table 2-4 for a detailed top level device memory map that includes the ARM memory space.

Copyright © 2011–2013, Texas Instruments Incorporated

2.5 DSP Subsystem

The DSP Subsystem includes the following features:

- C674x DSP CPU
- 32KB L1 Program (L1P)/Cache (up to 32KB)
- 32KB L1 Data (L1D)/Cache (up to 32KB)
- 256KB Unified Mapped RAM/Cache (L2)
- Boot ROM (cannot be used for application code)
- Little endian

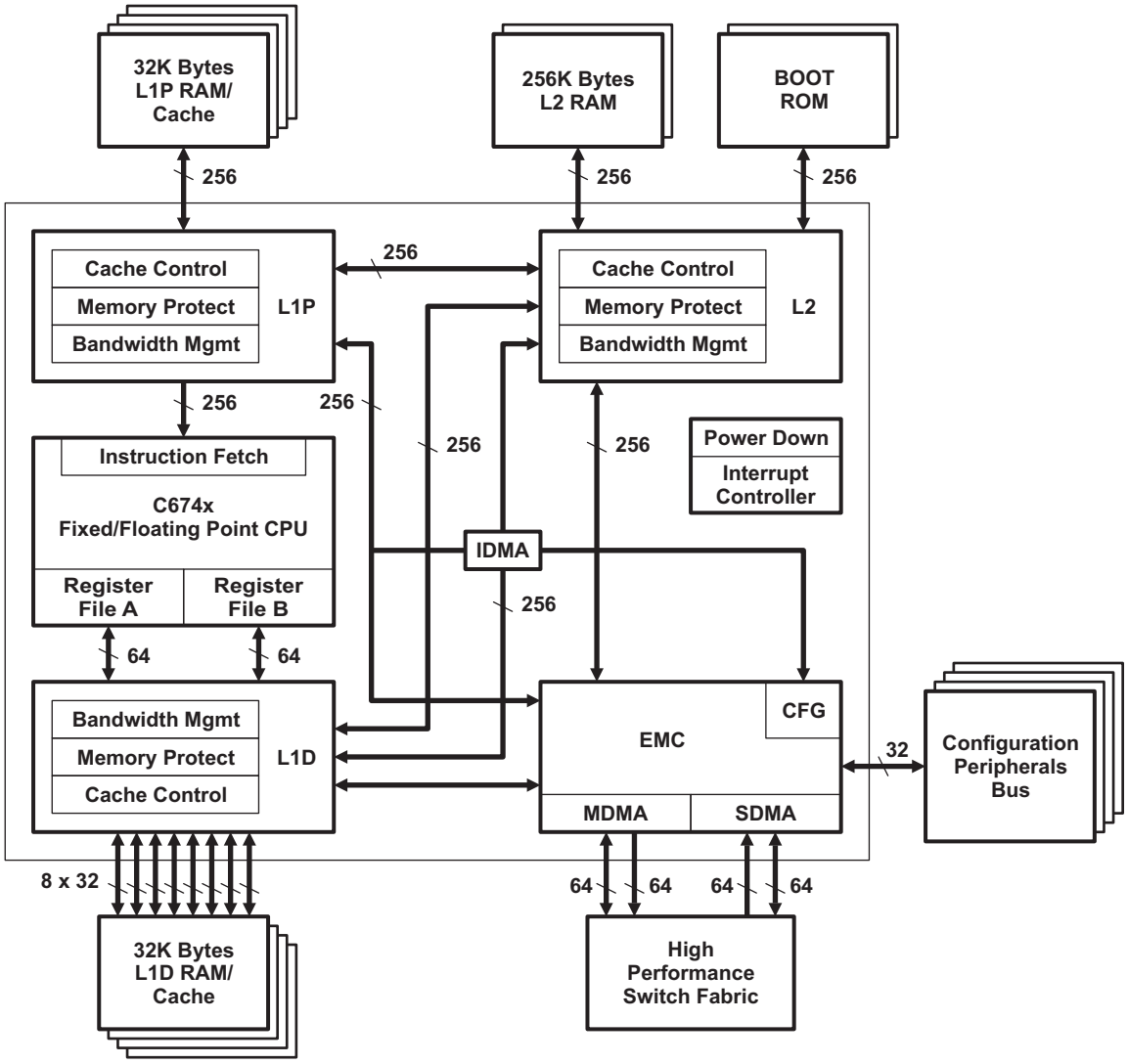

Figure 2-1. C674x Megamodule Block Diagram

Copyright © 2011–2013, Texas Instruments Incorporated

2.5.1 C674x DSP CPU Description

The C674x Central Processing Unit (CPU) consists of eight functional units, two register files, and two data paths as shown in Figure 2-2. The two general-purpose register files (A and B) each contain 32 32-bit registers for a total of 64 registers. The general-purpose registers can be used for data or can be data address pointers. The data types supported include packed 8-bit data, packed 16-bit data, 32-bit data, 40-bit data, and 64-bit data. Values larger than 32 bits, such as 40-bit-long or 64-bit-long values are stored in register pairs, with the 32 LSBs of data placed in an even register and the remaining 8 or 32 MSBs in the next upper register (which is always an odd-numbered register).

The eight functional units (.M1, .L1, .D1, .S1, .M2, .L2, .D2, and .S2) are each capable of executing one instruction every clock cycle. The .M functional units perform all multiply operations. The .S and .L units perform a general set of arithmetic, logical, and branch functions. The .D units primarily load data from memory to the register file and store results from the register file into memory.

The C674x CPU combines the performance of the C64x+ core with the floating-point capabilities of the C67x+ core.

Each C674x .M unit can perform one of the following each clock cycle: one 32 x 32 bit multiply, one 16 x 32 bit multiply, two 16 x 16 bit multiplies, two 16 x 32 bit multiplies, two 16 x 16 bit multiplies with add/subtract capabilities, four 8 x 8 bit multiplies, four 8 x 8 bit multiplies with add operations, and four 16 x 16 multiplies with add/subtract capabilities (including a complex multiply). There is also support for Galois field multiplication for 8-bit and 32-bit data. Many communications algorithms such as FFTs and modems require complex multiplication. The complex multiply (CMPY) instruction takes for 16-bit inputs and produces a 32-bit real and a 32-bit imaginary output. There are also complex multiplies with rounding capability that produces one 32-bit packed output that contain 16-bit real and 16-bit imaginary values. The 32 x 32 bit multiply instructions provide the extended precision necessary for high-precision algorithms on a variety of signed and unsigned 32-bit data types.

The .L or (Arithmetic Logic Unit) now incorporates the ability to do parallel add/subtract operations on a pair of common inputs. Versions of this instruction exist to work on 32-bit data or on pairs of 16-bit data performing dual 16-bit add and subtracts in parallel. There are also saturated forms of these instructions.

The C674x core enhances the .S unit in several ways. On the previous cores, dual 16-bit MIN2 and MAX2 comparisons were only available on the .L units. On the C674x core they are also available on the .S unit which increases the performance of algorithms that do searching and sorting. Finally, to increase data packing and unpacking throughput, the .S unit allows sustained high performance for the quad 8-bit/16-bit and dual 16-bit instructions. Unpack instructions prepare 8-bit data for parallel 16-bit operations. Pack instructions return parallel results to output precision including saturation support.

Other new features include:

- **SPLOOP** - A small instruction buffer in the CPU that aids in creation of software pipelining loops where multiple iterations of a loop are executed in parallel. The SPLOOP buffer reduces the code size associated with software pipelining. Furthermore, loops in the SPLOOP buffer are fully interruptible.
- **Compact Instructions** - The native instruction size for the C6000 devices is 32 bits. Many common instructions such as MPY, AND, OR, ADD, and SUB can be expressed as 16 bits if the C674x compiler can restrict the code to use certain registers in the register file. This compression is performed by the code generation tools.
- **Instruction Set Enhancement** - As noted above, there are new instructions such as 32-bit multiplications, complex multiplications, packing, sorting, bit manipulation, and 32-bit Galois field multiplication.
- **Exceptions Handling** - Intended to aid the programmer in isolating bugs. The C674x CPU is able to detect and respond to exceptions, both from internally detected sources (such as illegal op-codes) and from system events (such as a watchdog time expiration).
- **Privilege** - Defines user and supervisor modes of operation, allowing the operating system to give a basic level of protection to sensitive resources. Local memory is divided into multiple pages, each with read, write, and execute permissions.

Copyright © 2011–2013, Texas Instruments Incorporated

- **Time-Stamp Counter** - Primarily targeted for Real-Time Operating System (RTOS) robustness, a free-running time-stamp counter is implemented in the CPU which is ***not*** sensitive to system stalls.

For more details on the C674x CPU and its enhancements over the C64x architecture, see the following documents:

- *TMS320C64x/C64x+ DSP CPU and Instruction Set Reference Guide* (literature number SPRUFE8)
- *TMS320C64x Technical Overview* (literature number SPRU395)

Copyright © 2011–2013, Texas Instruments Incorporated

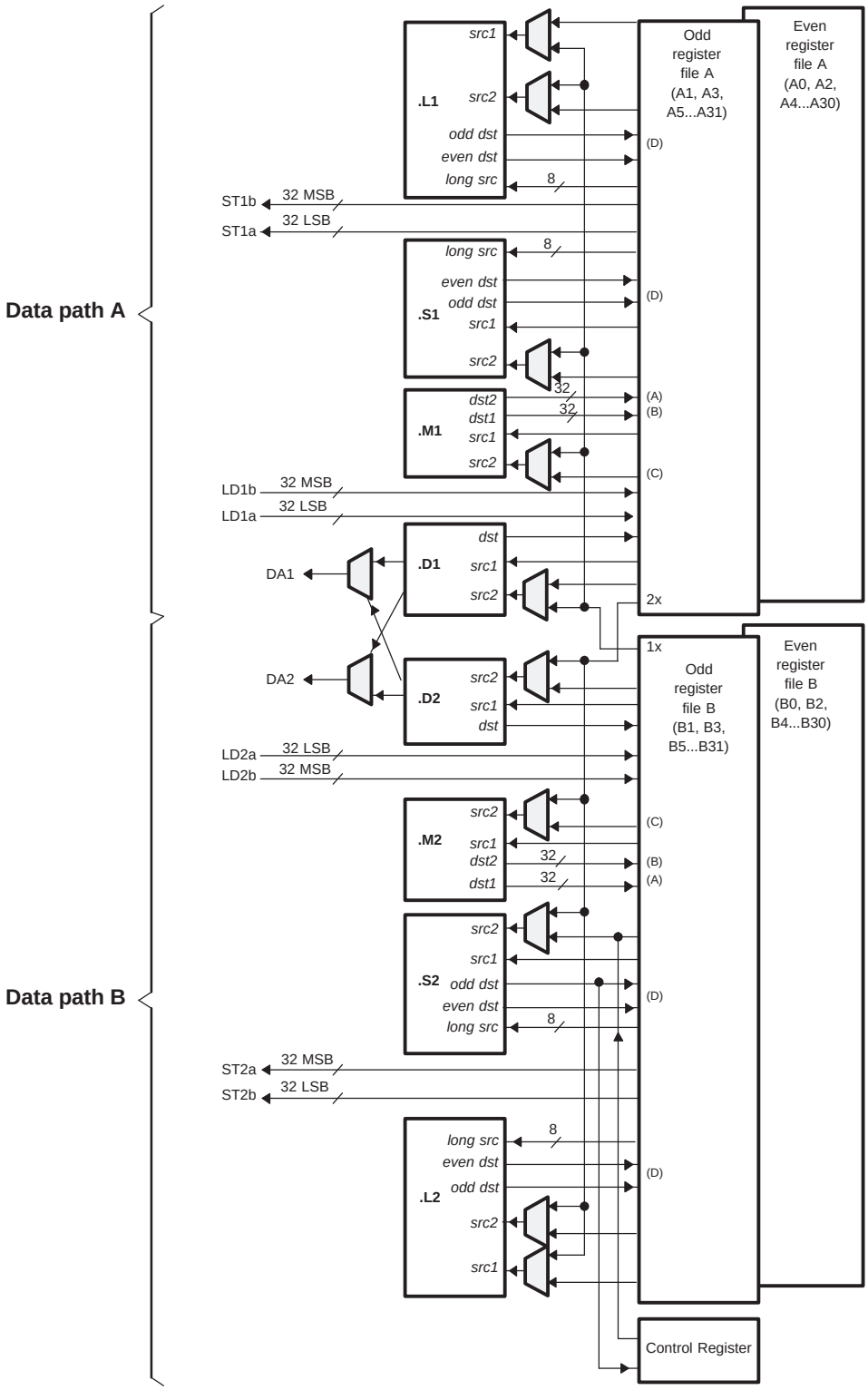

A. On .M unit, *dst2* is 32 MSB.
B. On .M unit, *dst1* is 32 LSB.
C. On C64x CPU .M unit, *src2* is 32 bits; on C64x+ CPU .M unit, *src2* is 64 bits.
D. On .L and .S units, *odd dst* connects to odd register files and *even dst* connects to even register files.

Figure 2-2. TMS320C674x CPU (DSP Core) Data Paths

2.5.2 DSP Memory Mapping

The DSP memory map is shown in Section 2.6.

By default the DSP also has access to most on and off chip memory areas, with the exception of the ARM RAM, ROM, and AINTC interrupt controller.

Additionally, the DSP megamodule includes the capability to limit access to its internal memories through its SDMA port; without needing an external MPU unit.

2.5.2.1 ARM Internal Memories

The DSP does not have access to the ARM internal memory.

2.5.2.2 External Memories

The DSP has access to the following External memories:

- Asynchronous EMIF / SDRAM / NAND / NOR Flash (EMIFA)
- SDRAM (DDR2)

2.5.2.3 DSP Internal Memories

The DSP has access to the following DSP memories:

- L2 RAM
- L1P RAM
- L1D RAM

2.5.2.4 C674x CPU

The C674x core uses a two-level cache-based architecture. The Level 1 Program cache (L1P) is 32 KB direct mapped cache and the Level 1 Data cache (L1D) is 32 KB 2-way set associated cache. The Level 2 memory/cache (L2) consists of a 256 KB memory space that is shared between program and data space. L2 memory can be configured as mapped memory, cache, or a combination of both.

Table 2-2 shows a memory map of the C674x CPU cache registers for the device.

Table 2-2. C674x Cache Registers

Byte Address	Register Name	Register Description
0x0184 0000	L2CFG	L2 Cache configuration register
0x0184 0020	L1PCFG	L1P Size Cache configuration register
0x0184 0024	L1PCC	L1P Freeze Mode Cache configuration register
0x0184 0040	L1DCFG	L1D Size Cache configuration register
0x0184 0044	L1DCC	L1D Freeze Mode Cache configuration register
0x0184 0048 - 0x0184 0FFC	-	Reserved
0x0184 1000	EDMAWEIGHT	L2 EDMA access control register
0x0184 1004 - 0x0184 1FFC	-	Reserved
0x0184 2000	L2ALLOC0	L2 allocation register 0
0x0184 2004	L2ALLOC1	L2 allocation register 1
0x0184 2008	L2ALLOC2	L2 allocation register 2
0x0184 200C	L2ALLOC3	L2 allocation register 3
0x0184 2010 - 0x0184 3FFF	-	Reserved
0x0184 4000	L2WBAR	L2 writeback base address register
0x0184 4004	L2WWC	L2 writeback word count register
0x0184 4010	L2WIBAR	L2 writeback invalidate base address register
0x0184 4014	L2WIWC	L2 writeback invalidate word count register
0x0184 4018	L2IBAR	L2 invalidate base address register

Copyright © 2011–2013, Texas Instruments Incorporated

Table 2-2. C674x Cache Registers (continued)

Byte Address	Register Name	Register Description
0x0184 401C	L2IWC	L2 invalidate word count register
0x0184 4020	L1PIBAR	L1P invalidate base address register
0x0184 4024	L1PIWC	L1P invalidate word count register
0x0184 4030	L1DWIBAR	L1D writeback invalidate base address register
0x0184 4034	L1DWIWC	L1D writeback invalidate word count register
0x0184 4038	-	Reserved
0x0184 4040	L1DWBAR	L1D Block Writeback
0x0184 4044	L1DWWC	L1D Block Writeback
0x0184 4048	L1DIBAR	L1D invalidate base address register
0x0184 404C	L1DIWC	L1D invalidate word count register
0x0184 4050 - 0x0184 4FFF	-	Reserved
0x0184 5000	L2WB	L2 writeback all register
0x0184 5004	L2WBINV	L2 writeback invalidate all register
0x0184 5008	L2INV	L2 Global Invalidate without writeback
0x0184 500C - 0x0184 5027	-	Reserved
0x0184 5028	L1PINV	L1P Global Invalidate
0x0184 502C - 0x0184 5039	-	Reserved
0x0184 5040	L1DWB	L1D Global Writeback
0x0184 5044	L1DWBINV	L1D Global Writeback with Invalidate
0x0184 5048	L1DINV	L1D Global Invalidate without writeback
0x0184 8000 – 0x0184 80FF	MAR0 - MAR63	Reserved 0x0000 0000 – 0x3FFF FFFF
0x0184 8100 – 0x0184 817F	MAR64 – MAR95	Memory Attribute Registers for EMIFA SDRAM Data (CS0) External memory addresses 0x4000 0000 – 0x5FFF FFFF
0x0184 8180 – 0x0184 8187	MAR96 - MAR97	Memory Attribute Registers for EMIFA Async Data (CS2) External memory addresses 0x6000 0000 – 0x61FF FFFF
0x0184 8188 – 0x0184 818F	MAR98 – MAR99	Memory Attribute Registers for EMIFA Async Data (CS3) External memory addresses 0x6200 0000 – 0x63FF FFFF
0x0184 8190 – 0x0184 8197	MAR100 – MAR101	Memory Attribute Registers for EMIFA Async Data (CS4) External memory addresses 0x6400 0000 – 0x65FF FFFF
0x0184 8198 – 0x0184 819F	MAR102 – MAR103	Memory Attribute Registers for EMIFA Async Data (CS5) External memory addresses 0x6600 0000 – 0x67FF FFFF
0x0184 81A0 – 0x0184 81FF	MAR104 – MAR127	Reserved 0x6800 0000 – 0x7FFF FFFF
0x0184 8200	MAR128	Memory Attribute Register for Shared RAM External memory addresses 0x8000 0000 – 0x8001 FFFF
		Reserved 0x8002 0000 – 0x81FF FFFF
0x0184 8204 – 0x0184 82FF	MAR129 – MAR191	Reserved 0x8200 0000 – 0xBFFF FFFF
0x0184 8300 – 0x0184 837F	MAR192 – MAR223	Memory Attribute Registers for DDR2 Data (CS2) External memory addresses 0xC000 0000 – 0xDFFF FFFF
0x0184 8380 – 0x0184 83FF	MAR224 – MAR255	Reserved 0xE000 0000 – 0xFFFF FFFF

Table 2-3. C674x L1/L2 Memory Protection Registers

HEX ADDRESS RANGE	REGISTER ACRONYM	DESCRIPTION
0x0184 A000	L2MPFAR	L2 memory protection fault address register
0x0184 A004	L2MPFSR	L2 memory protection fault status register
0x0184 A008	L2MPFCR	L2 memory protection fault command register
0x0184 A00C - 0x0184 A0FF	-	Reserved
0x0184 A100	L2MPLK0	L2 memory protection lock key bits [31:0]
0x0184 A104	L2MPLK1	L2 memory protection lock key bits [63:32]
0x0184 A108	L2MPLK2	L2 memory protection lock key bits [95:64]

Copyright © 2011–2013, Texas Instruments Incorporated

Table 2-3. C674x L1/L2 Memory Protection Registers (continued)

HEX ADDRESS RANGE	REGISTER ACRONYM	DESCRIPTION
0x0184 A10C	L2MPLK3	L2 memory protection lock key bits [127:96]
0x0184 A110	L2MPLKCMD	L2 memory protection lock key command register
0x0184 A114	L2MPLKSTAT	L2 memory protection lock key status register
0x0184 A118 - 0x0184 A1FF	-	Reserved
0x0184 A200	L2MPPA0	L2 memory protection page attribute register 0 (controls memory address 0x0080 0000 - 0x0080 1FFF)
0x0184 A204	L2MPPA1	L2 memory protection page attribute register 1 (controls memory address 0x0080 2000 - 0x0080 3FFF)
0x0184 A208	L2MPPA2	L2 memory protection page attribute register 2 (controls memory address 0x0080 4000 - 0x0080 5FFF)
0x0184 A20C	L2MPPA3	L2 memory protection page attribute register 3 (controls memory address 0x0080 6000 - 0x0080 7FFF)
0x0184 A210	L2MPPA4	L2 memory protection page attribute register 4 (controls memory address 0x0080 8000 - 0x0080 9FFF)
0x0184 A214	L2MPPA5	L2 memory protection page attribute register 5 (controls memory address 0x0080 A000 - 0x0080 BFFF)
0x0184 A218	L2MPPA6	L2 memory protection page attribute register 6 (controls memory address 0x0080 C000 - 0x0080 DFFF)
0x0184 A21C	L2MPPA7	L2 memory protection page attribute register 7 (controls memory address 0x0080 E000 - 0x0080 FFFF)
0x0184 A220	L2MPPA8	L2 memory protection page attribute register 8 (controls memory address 0x0081 0000 - 0x0081 1FFF)
0x0184 A224	L2MPPA9	L2 memory protection page attribute register 9 (controls memory address 0x0081 2000 - 0x0081 3FFF)
0x0184 A228	L2MPPA10	L2 memory protection page attribute register 10 (controls memory address 0x0081 4000 - 0x0081 5FFF)
0x0184 A22C	L2MPPA11	L2 memory protection page attribute register 11 (controls memory address 0x0081 6000 - 0x0081 7FFF)
0x0184 A230	L2MPPA12	L2 memory protection page attribute register 12 (controls memory address 0x0081 8000 - 0x0081 9FFF)
0x0184 A234	L2MPPA13	L2 memory protection page attribute register 13 (controls memory address 0x0081 A000 - 0x0081 BFFF)
0x0184 A238	L2MPPA14	L2 memory protection page attribute register 14 (controls memory address 0x0081 C000 - 0x0081 DFFF)
0x0184 A23C	L2MPPA15	L2 memory protection page attribute register 15 (controls memory address 0x0081 E000 - 0x0081 FFFF)
0x0184 A240	L2MPPA16	L2 memory protection page attribute register 16 (controls memory address 0x0082 0000 - 0x0082 1FFF)
0x0184 A244	L2MPPA17	L2 memory protection page attribute register 17 (controls memory address 0x0082 2000 - 0x0082 3FFF)
0x0184 A248	L2MPPA18	L2 memory protection page attribute register 18 (controls memory address 0x0082 4000 - 0x0082 5FFF)
0x0184 A24C	L2MPPA19	L2 memory protection page attribute register 19 (controls memory address 0x0082 6000 - 0x0082 7FFF)
0x0184 A250	L2MPPA20	L2 memory protection page attribute register 20 (controls memory address 0x0082 8000 - 0x0082 9FFF)
0x0184 A254	L2MPPA21	L2 memory protection page attribute register 21 (controls memory address 0x0082 A000 - 0x0082 BFFF)
0x0184 A258	L2MPPA22	L2 memory protection page attribute register 22 (controls memory address 0x0082 C000 - 0x0082 DFFF)
0x0184 A25C	L2MPPA23	L2 memory protection page attribute register 23 (controls memory address 0x0082 E000 - 0x0082 FFFF)
0x0184 A260	L2MPPA24	L2 memory protection page attribute register 24 (controls memory address 0x0083 0000 - 0x0083 1FFF)

Copyright © 2011–2013, Texas Instruments Incorporated

Table 2-3. C674x L1/L2 Memory Protection Registers (continued)

HEX ADDRESS RANGE	REGISTER ACRONYM	DESCRIPTION
0x0184 A264	L2MPPA25	L2 memory protection page attribute register 25 (controls memory address 0x0083 2000 - 0x0083 3FFF)
0x0184 A268	L2MPPA26	L2 memory protection page attribute register 26 (controls memory address 0x0083 4000 - 0x0083 5FFF)
0x0184 A26C	L2MPPA27	L2 memory protection page attribute register 27 (controls memory address 0x0083 6000 - 0x0083 7FFF)
0x0184 A270	L2MPPA28	L2 memory protection page attribute register 28 (controls memory address 0x0083 8000 - 0x0083 9FFF)
0x0184 A274	L2MPPA29	L2 memory protection page attribute register 29 (controls memory address 0x0083 A000 - 0x0083 BFFF)
0x0184 A278	L2MPPA30	L2 memory protection page attribute register 30 (controls memory address 0x0083 C000 - 0x0083 DFFF)
0x0184 A27C	L2MPPA31	L2 memory protection page attribute register 31 (controls memory address 0x0083 E000 - 0x0083 FFFF)
0x0184 A280	L2MPPA32	L2 memory protection page attribute register 32 (controls memory address 0x0070 0000 - 0x0070 7FFF)
0x0184 A284	L2MPPA33	L2 memory protection page attribute register 33 (controls memory address 0x0070 8000 - 0x0070 FFFF)
0x0184 A288	L2MPPA34	L2 memory protection page attribute register 34 (controls memory address 0x0071 0000 - 0x0071 7FFF)
0x0184 A28C	L2MPPA35	L2 memory protection page attribute register 35 (controls memory address 0x0071 8000 - 0x0071 FFFF)
0x0184 A290	L2MPPA36	L2 memory protection page attribute register 36 (controls memory address 0x0072 0000 - 0x0072 7FFF)
0x0184 A294	L2MPPA37	L2 memory protection page attribute register 37 (controls memory address 0x0072 8000 - 0x0072 FFFF)
0x0184 A298	L2MPPA38	L2 memory protection page attribute register 38 (controls memory address 0x0073 0000 - 0x0073 7FFF)
0x0184 A29C	L2MPPA39	L2 memory protection page attribute register 39 (controls memory address 0x0073 8000 - 0x0073 FFFF)
0x0184 A2A0	L2MPPA40	L2 memory protection page attribute register 40 (controls memory address 0x0074 0000 - 0x0074 7FFF)
0x0184 A2A4	L2MPPA41	L2 memory protection page attribute register 41 (controls memory address 0x0074 8000 - 0x0074 FFFF)
0x0184 A2A8	L2MPPA42	L2 memory protection page attribute register 42 (controls memory address 0x0075 0000 - 0x0075 7FFF)
0x0184 A2AC	L2MPPA43	L2 memory protection page attribute register 43 (controls memory address 0x0075 8000 - 0x0075 FFFF)
0x0184 A2B0	L2MPPA44	L2 memory protection page attribute register 44 (controls memory address 0x0076 0000 - 0x0076 7FFF)
0x0184 A2B4	L2MPPA45	L2 memory protection page attribute register 45 (controls memory address 0x0076 8000 - 0x0076 FFFF)
0x0184 A2B8	L2MPPA46	L2 memory protection page attribute register 46 (controls memory address 0x0077 0000 - 0x0077 7FFF)
0x0184 A2BC	L2MPPA47	L2 memory protection page attribute register 47 (controls memory address 0x0077 8000 - 0x0077 FFFF)
0x0184 A2C0	L2MPPA48	L2 memory protection page attribute register 48 (controls memory address 0x0078 0000 - 0x0078 7FFF)
0x0184 A2C4	L2MPPA49	L2 memory protection page attribute register 49 (controls memory address 0x0078 8000 - 0x0078 FFFF)
0x0184 A2C8	L2MPPA50	L2 memory protection page attribute register 50 (controls memory address 0x0079 0000 - 0x0079 7FFF)
0x0184 A2CC	L2MPPA51	L2 memory protection page attribute register 51 (controls memory address 0x0079 8000 - 0x0079 FFFF)
0x0184 A2D0	L2MPPA52	L2 memory protection page attribute register 52 (controls memory address 0x007A 0000 - 0x007A 7FFF)

Copyright © 2011–2013, Texas Instruments Incorporated

Table 2-3. C674x L1/L2 Memory Protection Registers (continued)

HEX ADDRESS RANGE	REGISTER ACRONYM	DESCRIPTION
0x0184 A2D4	L2MPPA53	L2 memory protection page attribute register 53 (controls memory address 0x007A 8000 - 0x007A FFFF)
0x0184 A2D8	L2MPPA54	L2 memory protection page attribute register 54 (controls memory address 0x007B 0000 - 0x007B 7FFF)
0x0184 A2DC	L2MPPA55	L2 memory protection page attribute register 55 (controls memory address 0x007B 8000 - 0x007B FFFF)
0x0184 A2E0	L2MPPA56	L2 memory protection page attribute register 56 (controls memory address 0x007C 0000 - 0x007C 7FFF)
0x0184 A2E4	L2MPPA57	L2 memory protection page attribute register 57 (controls memory address 0x007C 8000 - 0x007C FFFF)
0x0184 A2E8	L2MPPA58	L2 memory protection page attribute register 58 (controls memory address 0x007D 0000 - 0x007D 7FFF)
0x0184 A2EC	L2MPPA59	L2 memory protection page attribute register 59 (controls memory address 0x007D 8000 - 0x007D FFFF)
0x0184 A2F0	L2MPPA60	L2 memory protection page attribute register 60 (controls memory address 0x007E 0000 - 0x007E 7FFF)
0x0184 A2F4	L2MPPA61	L2 memory protection page attribute register 61 (controls memory address 0x007E 8000 - 0x007E FFFF)
0x0184 A2F8	L2MPPA62	L2 memory protection page attribute register 62 (controls memory address 0x007F 0000 - 0x007F 7FFF)
0x0184 A2FC	L2MPPA63	L2 memory protection page attribute register 63 (controls memory address 0x007F 8000 - 0x007F FFFF)
0x0184 A300 - 0x0184 A3FF	-	Reserved
0x0184 A400	L1PMPFAR	L1P memory protection fault address register
0x0184 A404	L1PMPFSR	L1P memory protection fault status register
0x0184 A408	L1PMPFCR	L1P memory protection fault command register
0x0184 A40C - 0x0184 A4FF	-	Reserved
0x0184 A500	L1PMPLK0	L1P memory protection lock key bits [31:0]
0x0184 A504	L1PMPLK1	L1P memory protection lock key bits [63:32]
0x0184 A508	L1PMPLK2	L1P memory protection lock key bits [95:64]
0x0184 A50C	L1PMPLK3	L1P memory protection lock key bits [127:96]
0x0184 A510	L1PMPLKCMD	L1P memory protection lock key command register
0x0184 A514	L1PMPLKSTAT	L1P memory protection lock key status register
0x0184 A518 - 0x0184 A5FF	-	Reserved
0x0184 A600 - 0x0184 A63F	-	Reserved (1)
0x0184 A640	L1PMPPA16	L1P memory protection page attribute register 16 (controls memory address 0x00E0 0000 - 0x00E0 07FF)
0x0184 A644	L1PMPPA17	L1P memory protection page attribute register 17 (controls memory address 0x00E0 0800 - 0x00E0 0FFF)
0x0184 A648	L1PMPPA18	L1P memory protection page attribute register 18 (controls memory address 0x00E0 1000 - 0x00E0 17FF)
0x0184 A64C	L1PMPPA19	L1P memory protection page attribute register 19 (controls memory address 0x00E0 1800 - 0x00E0 1FFF)
0x0184 A650	L1PMPPA20	L1P memory protection page attribute register 20 (controls memory address 0x00E0 2000 - 0x00E0 27FF)
0x0184 A654	L1PMPPA21	L1P memory protection page attribute register 21 (controls memory address 0x00E0 2800 - 0x00E0 2FFF)
0x0184 A658	L1PMPPA22	L1P memory protection page attribute register 22 (controls memory address 0x00E0 3000 - 0x00E0 37FF)
0x0184 A65C	L1PMPPA23	L1P memory protection page attribute register 23 (controls memory address 0x00E0 3800 - 0x00E0 3FFF)

(1) These addresses correspond to the L1P memory protection page attribute registers 0-15 (L1PMPPA0-L1PMPPA15) of the C674x megamaodule. These registers are not supported for this device.

Copyright © 2011–2013, Texas Instruments Incorporated

Table 2-3. C674x L1/L2 Memory Protection Registers (continued)

HEX ADDRESS RANGE	REGISTER ACRONYM	DESCRIPTION
0x0184 A660	L1PMPPA24	L1P memory protection page attribute register 24 (controls memory address 0x00E0 4000 - 0x00E0 47FF)
0x0184 A664	L1PMPPA25	L1P memory protection page attribute register 25 (controls memory address 0x00E0 4800 - 0x00E0 4FFF)
0x0184 A668	L1PMPPA26	L1P memory protection page attribute register 26 (controls memory address 0x00E0 5000 - 0x00E0 57FF)
0x0184 A66C	L1PMPPA27	L1P memory protection page attribute register 27 (controls memory address 0x00E0 5800 - 0x00E0 5FFF)
0x0184 A670	L1PMPPA28	L1P memory protection page attribute register 28 (controls memory address 0x00E0 6000 - 0x00E0 67FF)
0x0184 A674	L1PMPPA29	L1P memory protection page attribute register 29 (controls memory address 0x00E0 6800 - 0x00E0 6FFF)
0x0184 A678	L1PMPPA30	L1P memory protection page attribute register 30 (controls memory address 0x00E0 7000 - 0x00E0 77FF)
0x0184 A67C	L1PMPPA31	L1P memory protection page attribute register 31 (controls memory address 0x00E0 7800 - 0x00E0 7FFF)
0x0184 A67F – 0x0184 ABFF	-	Reserved
0x0184 AC00	L1DMPFAR	L1D memory protection fault address register
0x0184 AC04	L1DMPFSR	L1D memory protection fault status register
0x0184 AC08	L1DMPFCR	L1D memory protection fault command register
0x0184 AC0C - 0x0184 ACFF	-	Reserved
0x0184 AD00	L1DMPLK0	L1D memory protection lock key bits [31:0]
0x0184 AD04	L1DMPLK1	L1D memory protection lock key bits [63:32]
0x0184 AD08	L1DMPLK2	L1D memory protection lock key bits [95:64]
0x0184 AD0C	L1DMPLK3	L1D memory protection lock key bits [127:96]
0x0184 AD10	L1DMPLKCMD	L1D memory protection lock key command register
0x0184 AD14	L1DMPLKSTAT	L1D memory protection lock key status register
0x0184 AD18 - 0x0184 ADFF	-	Reserved
0x0184 AE00 - 0x0184 AE3F	-	Reserved (2)
0x0184 AE40	L1DMPPA16	L1D memory protection page attribute register 16 (controls memory address 0x00F0 0000 - 0x00F0 07FF)
0x0184 AE44	L1DMPPA17	L1D memory protection page attribute register 17 (controls memory address 0x00F0 0800 - 0x00F0 0FFF)
0x0184 AE48	L1DMPPA18	L1D memory protection page attribute register 18 (controls memory address 0x00F0 1000 - 0x00F0 17FF)
0x0184 AE4C	L1DMPPA19	L1D memory protection page attribute register 19 (controls memory address 0x00F0 1800 - 0x00F0 1FFF)
0x0184 AE50	L1DMPPA20	L1D memory protection page attribute register 20 (controls memory address 0x00F0 2000 - 0x00F0 27FF)
0x0184 AE54	L1DMPPA21	L1D memory protection page attribute register 21 (controls memory address 0x00F0 2800 - 0x00F0 2FFF)
0x0184 AE58	L1DMPPA22	L1D memory protection page attribute register 22 (controls memory address 0x00F0 3000 - 0x00F0 37FF)
0x0184 AE5C	L1DMPPA23	L1D memory protection page attribute register 23 (controls memory address 0x00F0 3800 - 0x00F0 3FFF)
0x0184 AE60	L1DMPPA24	L1D memory protection page attribute register 24 (controls memory address 0x00F0 4000 - 0x00F0 47FF)
0x0184 AE64	L1DMPPA25	L1D memory protection page attribute register 25 (controls memory address 0x00F0 4800 - 0x00F0 4FFF)
0x0184 AE68	L1DMPPA26	L1D memory protection page attribute register 26 (controls memory address 0x00F0 5000 - 0x00F0 57FF)

(2) These addresses correspond to the L1D memory protection page attribute registers 0-15 (L1DMPPA0-L1DMPPA15) of the C674x megamaodule. These registers are not supported for this device.

Copyright © 2011–2013, Texas Instruments Incorporated

Table 2-3. C674x L1/L2 Memory Protection Registers (continued)

HEX ADDRESS RANGE	REGISTER ACRONYM	DESCRIPTION
0x0184 AE6C	L1DMPPA27	L1D memory protection page attribute register 27 (controls memory address 0x00F0 5800 - 0x00F0 5FFF)
0x0184 AE70	L1DMPPA28	L1D memory protection page attribute register 28 (controls memory address 0x00F0 6000 - 0x00F0 67FF)
0x0184 AE74	L1DMPPA29	L1D memory protection page attribute register 29 (controls memory address 0x00F0 6800 - 0x00F0 6FFF)
0x0184 AE78	L1DMPPA30	L1D memory protection page attribute register 30 (controls memory address 0x00F0 7000 - 0x00F0 77FF)
0x0184 AE7C	L1DMPPA31	L1D memory protection page attribute register 31 (controls memory address 0x00F0 7800 - 0x00F0 7FFF)
0x0184 AE80 – 0x0185 FFFF	-	Reserved

Copyright © 2011–2013, Texas Instruments Incorporated

2.6 Memory Map Summary

Table 2-4. Top Level Memory Map

Start Address	End Address	Size	ARM Mem Map	DSP Mem Map	EDMA Mem Map	PRUSS Mem Map	Master Peripheral Mem Map	LCDC Mem Map
0x0000 0000	0x0000 0FFF	4K				PRUSS Local Address Space		
0x0000 1000	0x006F FFFF							
0x0070 0000	0x007F FFFF	1024K		DSP L2 ROM (1)				
0x0080 0000	0x0083 FFFF	256K		DSP L2 RAM				
0x0084 0000	0x00DF FFFF							
0x00E0 0000	0x00E0 7FFF	32K		DSP L1P RAM				
0x00E0 8000	0x00EF FFFF							
0x00F0 0000	0x00F0 7FFF	32K		DSP L1D RAM				
0x00F0 8000	0x017F FFFF							
0x0180 0000	0x0180 FFFF	64K		DSP Interrupt Controller				
0x0181 0000	0x0181 0FFF	4K		DSP Powerdown Controller				
0x0181 1000	0x0181 1FFF	4K		DSP Security ID				
0x0181 2000	0x0181 2FFF	4K		DSP Revision ID				
0x0181 3000	0x0181 FFFF	52K		-				
0x0182 0000	0x0182 FFFF	64K		DSP EMC				
0x0183 0000	0x0183 FFFF	64K		DSP Internal Reserved				
0x0184 0000	0x0184 FFFF	64K		DSP Memory System				
0x0185 0000	0x01BB FFFF							
0x01BC 0000	0x01BC 0FFF	4K	ARM ETB memory					
0x01BC 1000	0x01BC 17FF	2K	ARM ETB reg					
0x01BC 1800	0x01BC 18FF	256	ARM Ice Crusher					
0x01BC 1900	0x01BF FFFF							
0x01C0 0000	0x01C0 7FFF	32K	EDMA3 CC					
0x01C0 8000	0x01C0 83FF	1K	EDMA3 TC0					
0x01C0 8400	0x01C0 87FF	1K	EDMA3 TC1					
0x01C0 8800	0x01C0 FFFF							
0x01C1 0000	0x01C1 0FFF	4K	PSC 0					
0x01C1 1000	0x01C1 1FFF	4K	PLL Controller 0					
0x01C1 2000	0x01C1 3FFF							
0x01C1 4000	0x01C1 4FFF	4K	SYSCFG0					
0x01C1 5000	0x01C1 FFFF							
0x01C2 0000	0x01C2 0FFF	4K	Timer0					
0x01C2 1000	0x01C2 1FFF	4K	Timer1					
0x01C2 2000	0x01C2 2FFF	4K	I2C 0					
0x01C2 3000	0x01C2 3FFF	4K	RTC					
0x01C2 4000	0x01C3 FFFF							
0x01C4 0000	0x01C4 0FFF	4K	MMC/SD 0					
0x01C4 1000	0x01C4 1FFF	4K	SPI 0					

(1) The DSP L2 ROM is used for boot purposes and cannot be programmed with application code

Copyright © 2011–2013, Texas Instruments Incorporated

Table 2-4. Top Level Memory Map (continued)

Start Address	End Address	Size	ARM Mem Map	DSP Mem Map	EDMA Mem Map	PRUSS Mem Map	Master Peripheral Mem Map	LCDC Mem Map
0x01C4 2000	0x01C4 2FFF	4K	UART 0					
0x01C4 3000	0x01CF FFFF							
0x01D0 0000	0x01D0 0FFF	4K	McASP 0 Control					
0x01D0 1000	0x01D0 1FFF	4K	McASP 0 AFIFO Ctrl					
0x01D0 2000	0x01D0 2FFF	4K	McASP 0 Data					
0x01D0 3000	0x01D0 BFFF							
0x01D0 C000	0x01D0 CFFF	4K	UART 1					
0x01D0 D000	0x01D0 DFFF	4K	UART 2					
0x01D0 E000	0x01D0 FFFF							
0x01D1 0000	0x01D1 07FF	2K	McBSP0					
0x01D1 0800	0x01D1 0FFF	2K	McBSP0 FIFO Ctrl					
0x01D1 1000	0x01D1 17FF	2K	McBSP1					
0x01D1 1800	0x01D1 1FFF	2K	McBSP1 FIFO Ctrl					
0x01D1 2000	0x01DF FFFF							
0x01E0 0000	0x01E0 FFFF	64K	USB0					
0x01E1 0000	0x01E1 0FFF	4K	UHPI					
0x01E1 1000	0x01E1 2FFF							
0x01E1 3000	0x01E1 3FFF	4K	LCD Controller					
0x01E1 4000	0x01E1 4FFF	4K	Memory Protection Unit 1 (MPU 1)					
0x01E1 5000	0x01E1 5FFF	4K	Memory Protection Unit 2 (MPU 2)					
0x01E1 6000	0x01E1 6FFF	4K	UPP					
0x01E1 7000	0x01E1 7FFF	4K	VPIF					
0x01E1 8000	0x01E1 9FFF	8K	SATA					
0x01E1 A000	0x01E1 AFFF	4K	PLL Controller 1					
0x01E1 B000	0x01E1 BFFF	4K	MMCSD1					
0x01E1 C000	0x01E1 FFFF							
0x01E2 0000	0x01E2 1FFF	8K	EMAC Control Module RAM					
0x01E2 2000	0x01E2 2FFF	4K	EMAC Control Module Registers					
0x01E2 3000	0x01E2 3FFF	4K	EMAC Control Registers					
0x01E2 4000	0x01E2 4FFF	4K	EMAC MDIO port					
0x01E2 5000	0x01E2 5FFF	4K	USB1					
0x01E2 6000	0x01E2 6FFF	4K	GPIO					
0x01E2 7000	0x01E2 7FFF	4K	PSC 1					
0x01E2 8000	0x01E2 8FFF	4K	I2C 1					
0x01E2 9000	0x01E2 BFFF							
0x01E2 C000	0x01E2 CFFF	4K	SYSCFG1					
0x01E2 D000	0x01E2 FFFF							
0x01E3 0000	0x01E3 7FFF	32K	EDMA3 CC1					
0x01E3 8000	0x01E3 83FF	1K	EDMA3 TC2					
0x01E3 8400	0x01EF FFFF							
0x01F0 0000	0x01F0 0FFF	4K	eHRPWM 0					
0x01F0 1000	0x01F0 1FFF	4K	HRPWM 0					
0x01F0 2000	0x01F0 2FFF	4K	eHRPWM 1					
0x01F0 3000	0x01F0 3FFF	4K	HRPWM 1					
0x01F0 4000	0x01F0 5FFF							
0x01F0 6000	0x01F0 6FFF	4K	ECAP 0					

Copyright © 2011–2013, Texas Instruments Incorporated

Table 2-4. Top Level Memory Map (continued)

Start Address	End Address	Size	ARM Mem Map	DSP Mem Map	EDMA Mem Map	PRUSS Mem Map	Master Peripheral Mem Map	LCDC Mem Map
0x01F0 7000	0x01F0 7FFF	4K	ECAP 1					
0x01F0 8000	0x01F0 8FFF	4K	ECAP 2					
0x01F0 9000	0x01F0 BFFF							
0x01F0 C000	0x01F0 CFFF	4K	Timer2					
0x01F0 D000	0x01F0 DFFF	4K	Timer3					
0x01F0 E000	0x01F0 EFFF	4K	SPI1					
0x01F0 F000	0x01F0 FFFF							
0x01F1 0000	0x01F1 0FFF	4K	McBSP0 FIFO Data					
0x01F1 1000	0x01F1 1FFF	4K	McBSP1 FIFO Data					
0x01F1 2000	0x116F FFFF							
0x1170 0000	0x117F FFFF	1024K	DSP L2 ROM (2)					
0x1180 0000	0x1183 FFFF	256K	DSP L2 RAM					
0x1184 0000	0x11DF FFFF							
0x11E0 0000	0x11E0 7FFF	32K	DSP L1P RAM					
0x11E0 8000	0x11EF FFFF							
0x11F0 0000	0x11F0 7FFF	32K	DSP L1D RAM					
0x11F0 8000	0x3FFF FFFF							
0x4000 0000	0x5FFF FFFF	512M	EMIFA SDRAM data (CS0)					
0x6000 0000	0x61FF FFFF	32M	EMIFA async data (CS2)					
0x6200 0000	0x63FF FFFF	32M	EMIFA async data (CS3)					
0x6400 0000	0x65FF FFFF	32M	EMIFA async data (CS4)					
0x6600 0000	0x67FF FFFF	32M	EMIFA async data (CS5)					
0x6800 0000	0x6800 7FFF	32K	EMIFA Control Regs					
0x6800 8000	0x7FFF FFFF							
0x8000 0000	0x8001 FFFF	128K	Shared RAM					
0x8002 0000	0xAFFF FFFF							
0xB000 0000	0xB000 7FFF	32K	DDR2 Control Regs					
0xB000 8000	0xBFFF FFFF							
0xC000 0000	0xDFFF FFFF	512M	DDR2 Data					
0xE000 0000	0xFFFC FFFF							
0xFFFD 0000	0xFFFD FFFF	64K	ARM local ROM					
0xFFFE 0000	0xFFFE DFFF							
0xFFFE E000	0xFFFE FFFF	8K	ARM Interrupt Controller					
0xFFFF 0000	0xFFFF 1FFF	8K	ARM local RAM			ARM Local RAM (PRU0 only)		
0xFFFF 2000	0xFFFF FFFF							

(2) The DSP L2 ROM is used for boot purposes and cannot be programmed with application code

2.7 Pin Assignments

Extensive use of pin multiplexing is used to accommodate the largest number of peripheral functions in the smallest possible package. Pin multiplexing is controlled using a combination of hardware configuration at device reset and software programmable register settings.

2.7.1 Pin Map (Bottom View)

The following graphics show the bottom view of the GWT package pin assignments in four quadrants (A, B, C, and D). The pin assignments for both packages are identical.

	1	2	3	4	5	6	7	8	9	10	
W	VP_DOUT[0]/ LCD_D[0]/ UPP_XD[8]/ GP7[8]/ PRU1_R31[8]	VP_DOUT[1]/ LCD_D[1]/ UPP_XD[9]/ GP7[9]/ PRU1_R31[9]	VP_DOUT[2]/ LCD_D[2]/ UPP_XD[10]/ GP7[10]/ PRU1_R31[10]	DDR_A[10]	DDR_A[6]	DDR_A[2]	$\overline{\text{DDR_CLKN}}$	DDR_CLKP	$\overline{\text{DDR_RAS}}$	DDR_D[15]	W
V	VP_DOUT[3]/ LCD_D[3]/ UPP_XD[11]/ GP7[11]/ PRU1_R31[11]	VP_DOUT[4]/ LCD_D[4]/ UPP_XD[12]/ GP7[12]/ PRU1_R31[12]	VP_DOUT[5]/ LCD_D[5]/ UPP_XD[13]/ GP7[13]/ PRU1_R31[13]	DDR_A[12]	DDR_A[5]	DDR_A[3]	DDR_CKE	DDR_BA[0]	$\overline{\text{DDR_CS}}$	DDR_D[13]	V
U	VP_DOUT[6]/ LCD_D[6]/ UPP_XD[14]/ GP7[14]/ PRU1_R31[14]	VP_DOUT[7]/ LCD_D[7]/ UPP_XD[15]/ GP7[15]/ PRU1_R31[15]	VP_DOUT[8]/ LCD_D[8]/ UPP_XD[0]/ GP7[0]/ BOOT[0]	DDR_A[8]	DDR_A[4]	DDR_A[7]	DDR_A[0]	DDR_BA[2]	$\overline{\text{DDR_CAS}}$	DDR_D[12]	U
T	VP_DOUT[9]/ LCD_D[9]/ UPP_XD[1]/ GP7[1]/ BOOT[1]	VP_DOUT[10]/ LCD_D[10]/ UPP_XD[2]/ GP7[2]/ BOOT[2]	VP_DOUT[11]/ LCD_D[11]/ UPP_XD[3]/ GP7[3]/ BOOT[3]	DDR_A[11]	DDR_A[13]	DDR_A[9]	DDR_A[1]	$\overline{\text{DDR_WE}}$	DDR_BA[1]	DDR_D[10]	T
R	VP_DOUT[12]/ LCD_D[12]/ UPP_XD[4]/ GP7[4]/ BOOT[4]	VP_DOUT[13]/ LCD_D[13]/ UPP_XD[5]/ GP7[5]/ BOOT[5]	VP_DOUT[14]/ LCD_D[14]/ UPP_XD[6]/ GP7[6]/ BOOT[6]	DVDD3318_C	$\overline{\text{LCD_AC_ENB_CS}}$/ GP6[0]/ PRU1_R31[28]	DDR_VREF	DDR_DVDD18	DDR_DVDD18	DDR_DVDD18	DDR_DQM[1]	R
P	SATA_VDD	SATA_VDD	SATA_VDDR	VP_DOUT[15]/ LCD_D[15]/ UPP_XD[7]/ GP7[7]/ BOOT[7]	DVDD3318_C	DVDD3318_C	DDR_DVDD18	DDR_DVDD18	DDR_DVDD18	DDR_DVDD18	P
N	$\overline{\text{SATA_REFCLKN}}$	SATA_REFCLKP	SATA_REG	SATA_VDD	V_{SS}	DDR_DVDD18	RV_{DD}	CV_{DD}	DDR_DVDD18	DDR_DVDD18	N
M	SATA_VSS	SATA_VDD	NC	V_{SS}	V_{SS}	V_{SS}	V_{SS}	CV_{DD}	CV_{DD}	V_{SS}	M
L	SATA_RXP	$\overline{\text{SATA_RXN}}$	SATA_VSS	DV_{DD3318_C}	V_{SS}	DV_{DD18}	V_{SS}	V_{SS}	V_{SS}	V_{SS}	L
K	SATA_VSS	SATA_VSS	VP_CLKOUT2/ MMCSD1_DAT[2]/ PRU1_R30[2]/ GP6[3]/ PRU1_R31[3]	VP_CLKOUT3/ PRU1_R30[0]/ GP6[1]/ PRU1_R31[1]	DV_{DD18}	CV_{DD}	V_{SS}	V_{SS}	V_{SS}	V_{SS}	K
	1	2	3	4	5	6	7	8	9	10	

Figure 2-3. Pin Map (Quad A)

Copyright © 2011–2013, Texas Instruments Incorporated

	11	12	13	14	15	16	17	18	19	
W	DDR_D[7]	DDR_D[6]	DDR_DQM[0]	VP_CLKIN0/ UHPI_HCS/ PRU1_R30[10]/ GP6[7]/ UPP_2xTXCLK	PRU0_R30[28]/ UHPI_HCNTL1/ UPP_CHA_START/ GP6[10]	VP_DIN[4]/ UHPI_HD[12]/ UPP_D[12]/ RMII_RXD[1]/ PRU0_R31[26]	VP_DIN[2]/ UHPI_HD[10]/ UPP_D[10]/ RMII_RXER / PRU0_R31[24]	VP_DIN[1]/ UHPI_HD[9]/ UPP_D[9]/ RMII_MHZ_50 _CLK / PRU0_R31[23]	VP_DIN[0]/ UHPI_HD[8]/ UPP_D[8]/ RMII_CRS_DV/ PRU1_R31[29]	W
V	DDR_DQS[1]	DDR_D[5]	DDR_D[4]	DDR_D[2]	VP_CLKIN1/ UHPI_HDS1/ PRU1_R30[9]/ GP6[6]/ PRU1_R31[16]	VP_DIN[6]/ UHPI_HD[14]/ UPP_D[14]/ RMII_TXD[0]/ PRU0_R31[28]	VP_DIN[3]/ UHPI_HD[11]/ UPP_D[11]/ RMII_RXD[0]/ PRU0_R31[25]	VP_DIN[15]_ VSYNC/ UHPI_HD[7]/ UPP_D[7]/ PRU0_R30[15]/ PRU0_R31[15]	VP_DIN[14]_ HSYNC/ UHPI_HD[6]/ UPP_D[6]/ PRU0_R30[14]/ PRU0_R31[14]	V
U	DDR_D[14]	DDR_ZP	DDR_D[3]	DDR_D[1]	DDR_D[0]	PRU0_R30[27]/ UHPI_HHWIL/ UPP_CHA _ENABLE/ GP6[9]	PRU0_R30[29]/ UHPI_HCNTL0/ UPP_CHA_CLOCK/ GP6[11]	VP_DIN[7]/ UHPI_HD[15]/ UPP_D[15]/ RMII_TXD[1]/ PRU0_R31[29]	VP_DIN[13]_ FIELD/ UHPI_HD[5]/ UPP_D[5]/ PRU0_R30[13]/ PRU0_R31[13]	U
T	DDR_D[9]	DDR_D[11]	DDR_D[8]	DDR_DQS[0]	PRU0_R30[26]/ UHPI_HRW/ UPP_CHA_WAIT/ GP6[8]/ PRU1_R31[17]	VP_DIN[12]/ UHPI_HD[4]/ UPP_D[4]/ PRU0_R30[12]/ PRU0_R31[12]	RESETOUT/ UHPI_HAS/ PRU1_R30[14]/ GP6[15]	CLKOUT/ UHPI_HDS2/ PRU1_R30[13]/ GP6[14]	RSV2	T
R	DDR_DQGATE0	DDR_DQGATE1	DVDD18	VP_DIN[5]/ UHPI_HD[13]/ UPP_D[13]/ RMII_TXEN/ PRU0_R31[27]	VP_DIN[9]/ UHPI_HD[1]/ UPP_D[1]/ PRU0_R30[9]/ PRU0_R31[9]	PRU0_R30[30] / UHPI_HINT/ PRU1_R30[11]/ GP6[12]	PRU0_R30[31]/ UHPI_HRDY/ PRU1_R30[12] GP6[13]	VP_DIN[11]/ UHPI_HD[3]/ UPP_D[3]/ PRU0_R30[11]/ PRU0_R31[11]	VP_DIN[10]/ UHPI_HD[2]/ UPP_D[2]/ PRU0_R30[10]/ PRU0_R31[10]	R
P	V_{SS}	DVDD3318_C	DVDD18	USB1_VDDA18	USB1_VDDA33	USB0_ID	VP_DIN[8]/ UHPI_HD[0]/ UPP_D[0]/ GP6[5]/ PRU1_R31[0]	USB1_DM	USB1_DP	P
N	V_{SS}	V_{SS}	DVDD3318_C	USB0_VDDA18	PLL1_VDDA	NC	USB0_VDDA12	USB0_VDDA33	USB0_VBUS	N
M	V_{SS}	USB_CVDD	DVDD3318_C	NC	PLL1_VSSA	TDI	PLL0_VSSA	USB0_DM	USB0_DP	M
L	V_{SS}	CV_{DD}	DVDD3318_C	RTC_CVDD	PLL0_VDDA	TMS	TRST	OSCVSS	OSCIN	L
K	V_{SS}	CV_{DD}	DVDD3318_C	RESET	DVDD3318_B	EMU1	RTCK/ GP8[0]	USB0_DRVVBUS	OSCOUT	K
	11	12	13	14	15	16	17	18	19	

Figure 2-4. Pin Map (Quad B)

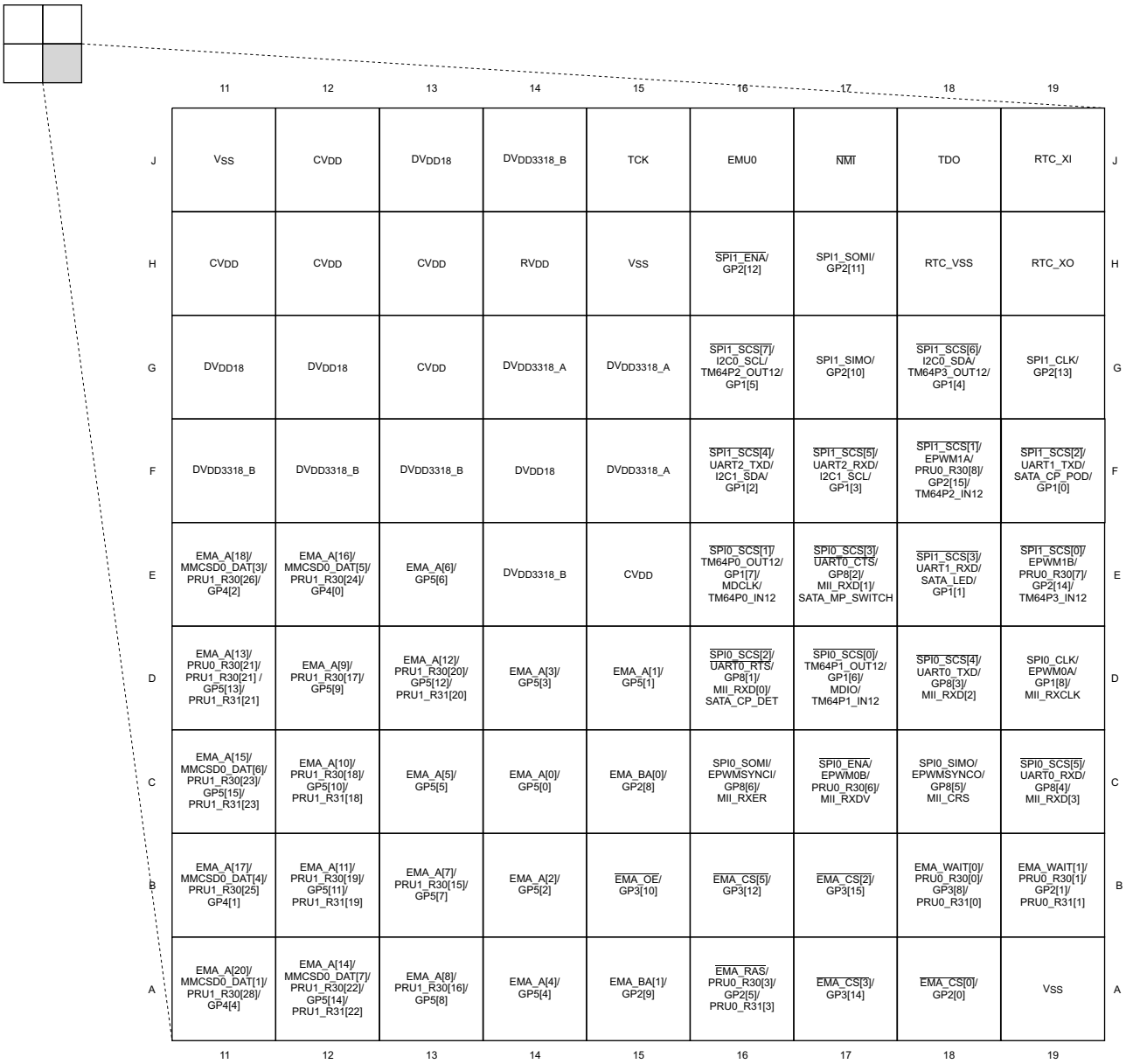

	11	12	13	14	15	16	17	18	19	
J	VSS	CVDD	DVDD18	DVDD3318_B	TCK	EMU0	$\overline{\text{NMI}}$	TDO	RTC_XI	J
H	CVDD	CVDD	CVDD	RVDD	VSS	$\overline{\text{SPI1_ENA}}$/ GP2[12]	SPI1_SOMI/ GP2[11]	RTC_VSS	RTC_XO	H
G	DVDD18	DVDD18	CVDD	DVDD3318_A	DVDD3318_A	$\overline{\text{SPI1_SCS[7]}}$/ I2C0_SCL/ TM64P2_OUT12/ GP1[5]	SPI1_SIMO/ GP2[10]	$\overline{\text{SPI1_SCS[6]}}$/ I2C0_SDA/ TM64P3_OUT12/ GP1[4]	SPI1_CLK/ GP2[13]	G
F	DVDD3318_B	DVDD3318_B	DVDD3318_B	DVDD18	DVDD3318_A	$\overline{\text{SPI1_SCS[4]}}$/ UART2_TXD/ I2C1_SDA/ GP1[2]	$\overline{\text{SPI1_SCS[5]}}$/ UART2_RXD/ I2C1_SCL/ GP1[3]	$\overline{\text{SPI1_SCS[1]}}$/ EPWM1A/ PRU0_R30[8]/ GP2[15]/ TM64P2_IN12	$\overline{\text{SPI1_SCS[2]}}$/ UART1_TXD/ SATA_CP_POD/ GP1[0]	F
E	EMA_A[18]/ MMCSD0_DAT[3]/ PRU1_R30[26]/ GP4[2]	EMA_A[16]/ MMCSD0_DAT[5]/ PRU1_R30[24]/ GP4[0]	EMA_A[6]/ GP5[6]	DVDD3318_B	CVDD	$\overline{\text{SPI0_SCS[1]}}$/ TM64P0_OUT12/ GP1[7]/ MDCLK/ TM64P0_IN12	$\overline{\text{SPI0_SCS[3]}}$/ UART0_CTS/ GP8[2]/ MII_RXD[1]/ SATA_MP_SWITCH	$\overline{\text{SPI1_SCS[3]}}$/ UART1_RXD/ SATA_LED/ GP1[1]	$\overline{\text{SPI1_SCS[0]}}$/ EPWM1B/ PRU0_R30[7]/ GP2[14]/ TM64P3_IN12	E
D	EMA_A[13]/ PRU0_R30[21]/ PRU1_R30[21] / GP5[13]/ PRU1_R31[21]	EMA_A[9]/ PRU1_R30[17]/ GP5[9]	EMA_A[12]/ PRU1_R30[20]/ GP5[12]/ PRU1_R31[20]	EMA_A[3]/ GP5[3]	EMA_A[1]/ GP5[1]	$\overline{\text{SPI0_SCS[2]}}$/ UART0_RTS/ GP8[1]/ MII_RXD[0]/ SATA_CP_DET	$\overline{\text{SPI0_SCS[0]}}$/ TM64P1_OUT12/ GP1[6]/ MDIO/ TM64P1_IN12	$\overline{\text{SPI0_SCS[4]}}$/ UART0_TXD/ GP8[3]/ MII_RXD[2]	SPI0_CLK/ EPWM0A/ GP1[8]/ MII_RXCLK	D
C	EMA_A[15]/ MMCSD0_DAT[6]/ PRU1_R30[23]/ GP5[15]/ PRU1_R31[23]	EMA_A[10]/ PRU1_R30[18]/ GP5[10]/ PRU1_R31[18]	EMA_A[5]/ GP5[5]	EMA_A[0]/ GP5[0]	EMA_BA[0]/ GP2[8]	SPI0_SOMI/ EPWMSYNCI/ GP8[6]/ MII_RXER	$\overline{\text{SPI0_ENA}}$/ EPWM0B/ PRU0_R30[6]/ MII_RXDV	SPI0_SIMO/ EPWMSYNCO/ GP8[5]/ MII_CRS	$\overline{\text{SPI0_SCS[5]}}$/ UART0_RXD/ GP8[4]/ MII_RXD[3]	C
B	EMA_A[17]/ MMCSD0_DAT[4]/ PRU1_R30[25] GP4[1]	EMA_A[11]/ PRU1_R30[19]/ GP5[11]/ PRU1_R31[19]	EMA_A[7]/ PRU1_R30[15]/ GP5[7]	EMA_A[2]/ GP5[2]	$\overline{\text{EMA_OE}}$/ GP3[10]	$\overline{\text{EMA_CS[5]}}$/ GP3[12]	$\overline{\text{EMA_CS[2]}}$/ GP3[15]	EMA_WAIT[0]/ PRU0_R30[0]/ GP3[8]/ PRU0_R31[0]	EMA_WAIT[1]/ PRU0_R30[1]/ GP2[1]/ PRU0_R31[1]	B
A	EMA_A[20]/ MMCSD0_DAT[1]/ PRU1_R30[28]/ GP4[4]	EMA_A[14]/ MMCSD0_DAT[7]/ PRU1_R30[22]/ GP5[14]/ PRU1_R31[22]	EMA_A[8]/ PRU1_R30[16]/ GP5[8]	EMA_A[4]/ GP5[4]	EMA_BA[1]/ GP2[9]	$\overline{\text{EMA_RAS}}$/ PRU0_R30[3]/ GP2[5]/ PRU0_R31[3]	$\overline{\text{EMA_CS[3]}}$/ GP3[14]	$\overline{\text{EMA_CS[0]}}$/ GP2[0]	VSS	A
	11	12	13	14	15	16	17	18	19	

Figure 2-5. Pin Map (Quad C)

Copyright © 2011–2013, Texas Instruments Incorporated

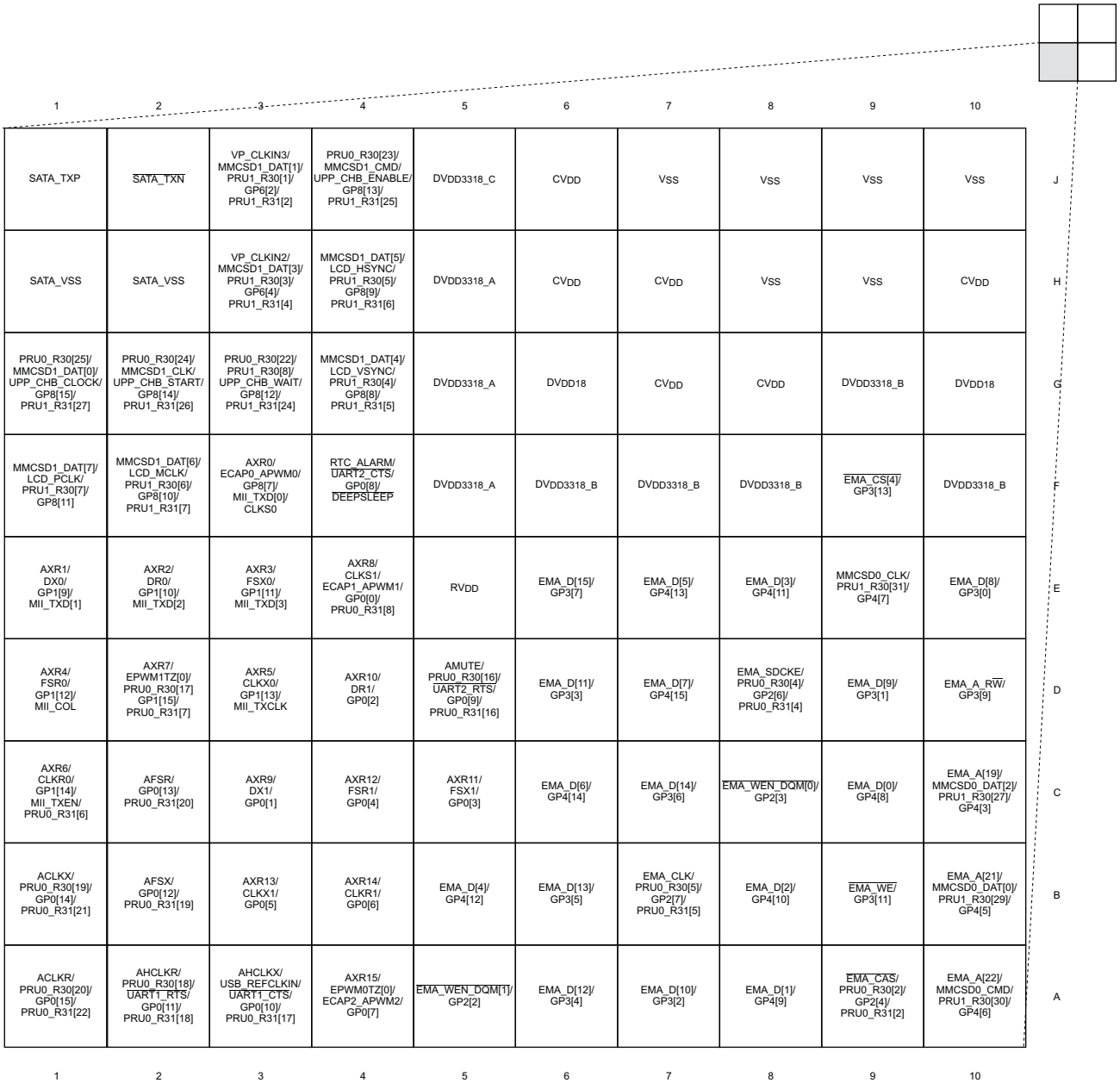

	1	2	3	4	5	6	7	8	9	10	
J	SATA_TXP	SATA_TXN	VP_CLKIN3/ MMCSD1_DAT[1]/ PRU1_R30[1]/ GP6[2]/ PRU1_R31[2]	PRU0_R30[23]/ MMCSD1_CMD/ UPP_CHB_ENABLE/ GP8[13]/ PRU1_R31[25]	DVDD3318_C	CVDD	VSS	VSS	VSS	VSS	J
H	SATA_VSS	SATA_VSS	VP_CLKIN2/ MMCSD1_DAT[3]/ PRU1_R30[3]/ GP6[4]/ PRU1_R31[4]	MMCSD1_DAT[5]/ LCD_HSYNC/ PRU1_R30[5]/ GP8[9]/ PRU1_R31[6]	DVDD3318_A	CVDD	CVDD	VSS	VSS	CVDD	H
G	PRU0_R30[25]/ MMCSD1_DAT[0]/ UPP_CHB_CLOCK/ GP8[15]/ PRU1_R31[27]	PRU0_R30[24]/ MMCSD1_CLK/ UPP_CHB_START/ GP8[14]/ PRU1_R31[26]	PRU0_R30[22]/ PRU1_R30[8]/ UPP_CHB_WAIT/ GP8[12]/ PRU1_R31[24]	MMCSD1_DAT[4]/ LCD_VSYNC/ PRU1_R30[4]/ GP8[8]/ PRU1_R31[5]	DVDD3318_A	DVDD18	CVDD	CVDD	DVDD3318_B	DVDD18	G
F	MMCSD1_DAT[7]/ LCD_PCLK/ PRU1_R30[7]/ GP8[11]	MMCSD1_DAT[6]/ LCD_MCLK/ PRU1_R30[6]/ GP8[10]/ PRU1_R31[7]	AXR0/ ECAP0_APWM0/ GP8[7]/ MII_TXD[0]/ CLKS0	RTC_ALARM/ UART2_CTS/ GP0[8]/ DEEPSLEEP	DVDD3318_A	DVDD3318_B	DVDD3318_B	DVDD3318_B	EMA_CS[4]/ GP3[13]	DVDD3318_B	F
E	AXR1/ DX0/ GP1[9]/ MII_TXD[1]	AXR2/ DR0/ GP1[10]/ MII_TXD[2]	AXR3/ FSX0/ GP1[11]/ MII_TXD[3]	AXR8/ CLKS1/ ECAP1_APWM1/ GP0[0]/ PRU0_R31[8]	RVDD	EMA_D[15]/ GP3[7]	EMA_D[5]/ GP4[13]	EMA_D[3]/ GP4[11]	MMCSD0_CLK/ PRU1_R30[31]/ GP4[7]	EMA_D[8]/ GP3[0]	E
D	AXR4/ FSR0/ GP1[12]/ MII_COL	AXR7/ EPWM1TZ[0]/ PRU0_R30[17] GP1[15]/ PRU0_R31[7]	AXR5/ CLKX0/ GP1[13]/ MII_TXCLK	AXR10/ DR1/ GP0[2]	AMUTE/ PRU0_R30[16]/ UART2_RTS/ GP0[9]/ PRU0_R31[16]	EMA_D[11]/ GP3[3]	EMA_D[7]/ GP4[15]	EMA_SDCKE/ PRU0_R30[4]/ GP2[6]/ PRU0_R31[4]	EMA_D[9]/ GP3[1]	EMA_A_RW/ GP3[9]	D
C	AXR6/ CLKR0/ GP1[14]/ MII_TXEN/ PRU0_R31[6]	AFSR/ GP0[13]/ PRU0_R31[20]	AXR9/ DX1/ GP0[1]	AXR12/ FSR1/ GP0[4]	AXR11/ FSX1/ GP0[3]	EMA_D[6]/ GP4[14]	EMA_D[14]/ GP3[6]	EMA_WEN_DQM[0]/ GP2[3]	EMA_D[0]/ GP4[8]	EMA_A[19]/ MMCSD0_DAT[2]/ PRU1_R30[27]/ GP4[3]	C
B	ACLKX/ PRU0_R30[19]/ GP0[14]/ PRU0_R31[21]	AFSX/ GP0[12]/ PRU0_R31[19]	AXR13/ CLKX1/ GP0[5]	AXR14/ CLKR1/ GP0[6]	EMA_D[4]/ GP4[12]	EMA_D[13]/ GP3[5]	EMA_CLK/ PRU0_R30[5]/ GP2[7]/ PRU0_R31[5]	EMA_D[2]/ GP4[10]	EMA_WE/ GP3[11]	EMA_A[21]/ MMCSD0_DAT[0]/ PRU1_R30[29]/ GP4[5]	B
A	ACLKR/ PRU0_R30[20]/ GP0[15]/ PRU0_R31[22]	AHCLKR/ PRU0_R30[18]/ UART1_RTS/ GP0[11]/ PRU0_R31[18]	AHCLKX/ USB_REFCLKIN/ UART1_CTS/ GP0[10]/ PRU0_R31[17]	AXR15/ EPWM0TZ[0]/ ECAP2_APWM2/ GP0[7]	EMA_WEN_DQM[1]/ GP2[2]	EMA_D[12]/ GP3[4]	EMA_D[10]/ GP3[2]	EMA_D[1]/ GP4[9]	EMA_CAS/ PRU0_R30[2]/ GP2[4]/ PRU0_R31[2]	EMA_A[22]/ MMCSD0_CMD/ PRU1_R30[30]/ GP4[6]	A
	1	2	3	4	5	6	7	8	9	10	

Figure 2-6. Pin Map (Quad D)

2.8 Pin Multiplexing Control

Device level pin multiplexing is controlled by registers PINMUX0 - PINMUX19 in the SYSCFG module.

For the device family, pin multiplexing can be controlled on a pin-by-pin basis. Each pin that is multiplexed with several different functions has a corresponding 4-bit field in one of the PINMUX registers.

Pin multiplexing selects which of several peripheral pin functions controls the pin's IO buffer **output** data and **output enable** values only. The default pin multiplexing control for almost every pin is to select 'none' of the peripheral functions in which case the pin's IO buffer is held tri-stated.

Note that the **input** from each pin is always routed to **all** of the peripherals that share the pin; the PINMUX registers have no effect on input from a pin.

Copyright © 2011–2013, Texas Instruments Incorporated

2.9 Terminal Functions

Table 2-5 to Table 2-31 identify the external signal names, the associated pin/ball numbers along with the mechanical package designator, the pin type (I, O, IO, OZ, or PWR), whether the pin/ball has any internal pullup/pulldown resistors, whether the pin/ball is configurable as an IO in GPIO mode, and a functional pin description.

2.9.1 Device Reset, NMI and JTAG

Table 2-5. Reset, NMI and JTAG Terminal Functions

SIGNAL		TYPE(1)	PULL(2)	POWER GROUP(3)	DESCRIPTION
NAME	NO.				
RESET					
$\overline{\text{RESET}}$	K14	I	IPU	B	Device reset input
$\overline{\text{NMI}}$	J17	I	IPU	B	Non-Maskable Interrupt
$\overline{\text{RESETOUT}}$ / $\overline{\text{UHPI_HAS}}$ / PRU1_R30[14] / GP6[15]	T17	O(4)	CP[21]	C	Reset output
JTAG					
TMS	L16	I	IPU	B	JTAG test mode select
TDI	M16	I	IPU	B	JTAG test data input
TDO	J18	O	IPU	B	JTAG test data output
TCK	J15	I	IPU	B	JTAG test clock
$\overline{\text{TRST}}$	L17	I	IPD	B	JTAG test reset
EMU0	J16	I/O	IPU	B	Emulation pin
EMU1	K16	I/O	IPU	B	Emulation pin
RTCK/ GP8[0] (5)	K17	I/O	IPD	B	JTAG Test Clock Return Clock Output

(1) I = Input, O = Output, I/O = Bidirectional, Z = High impedance, PWR = Supply voltage, GND = Ground, A = Analog signal.
Note: For multiplexed pins where functions have different types (ie., input versus output), the table reflects the pin function direction for that particular peripheral.
(2) IPD = Internal Pulldown resistor, IPU = Internal Pullup resistor. CP[n] = configurable pull-up/pull-down (where n is the pin group) using the PUPDENA and PUPDSEL registers in the System Module.
(3) This signal is part of a dual-voltage IO group (A, B or C). These groups can be operated at 3.3V or 1.8V nominal. The three groups can be operated at independent voltages but all pins withina group will operate at the same voltage. Group A operates at the voltage of power supply DVDD3318_A. Group B operates at the voltage of power supply DVDD3318_B. Group C operates at the voltage of power supply DVDD3318_C.
(4) Open drain mode for $\overline{\text{RESETOUT}}$ function.
(5) GP8[0] is initially configured as a reserved function after reset and will not be in a predictable state. This signal will only be stable after the GPIO configuration for this pin has been completed. Users should carefully consider the system implications of this pin being in an unknown state after reset.

Copyright © 2011–2013, Texas Instruments Incorporated

2.9.2 High-Frequency Oscillator and PLL

Table 2-6. High-Frequency Oscillator and PLL Terminal Functions

SIGNAL		TYPE(1)	PULL(2)	POWER GROUP(3)	DESCRIPTION
NAME	NO.				
CLKOUT / $\overline{\text{UHPI_HDS2}}$ / PRU1_R30[13] / GP6[14]	T18	O	CP[22]	C	PLL Observation Clock
1.2-V OSCILLATOR					
OSCIN	L19	I	—	—	Oscillator input
OSCOUT	K19	O	—	—	Oscillator output
OSCVSS	L18	GND	—	—	Oscillator ground
1.2-V PLL0					
PLL0_VDDA	L15	PWR	—	—	PLL analog V_{DD} (1.2-V filtered supply)
PLL0_VSSA	M17	GND	—	—	PLL analog V_{SS} (for filter)
1.2-V PLL1					
PLL1_VDDA	N15	PWR	—	—	PLL analog V_{DD} (1.2-V filtered supply)
PLL1_VSSA	M15	GND	—	—	PLL analog V_{SS} (for filter)

(1) I = Input, O = Output, I/O = Bidirectional, Z = High impedance, PWR = Supply voltage, GND = Ground, A = Analog signal.
Note: For multiplexed pins where functions have different types (ie., input versus output), the table reflects the pin function direction for that particular peripheral.
(2) IPD = Internal Pulldown resistor; IPU = Internal Pullup resistor; CP[*n*] = configurable pull-up/pull-down (where *n* is the pin group) using the PUPDENA and PUPDSEL registers in the System Module.
(3) This signal is part of a dual-voltage IO group (A, B or C). These groups can be operated at 3.3V or 1.8V nominal. The three groups can be operated at independent voltages but all pins withina group will operate at the same voltage. Group A operates at the voltage of power supply DVDD3318_A. Group B operates at the voltage of power supply DVDD3318_B. Group C operates at the voltage of power supply DVDD3318_C.

Copyright © 2011–2013, Texas Instruments Incorporated

2.9.3 Real-Time Clock and 32-kHz Oscillator

Table 2-7. Real-Time Clock (RTC) and 1.2-V, 32-kHz Oscillator Terminal Functions

SIGNAL		TYPE(1)	PULL(2)	POWER GROUP(3)	DESCRIPTION
NAME	NO.				
RTC_XI	J19	I	—	—	RTC 32-kHz oscillator input
RTC_XO	H19	O	—	—	RTC 32-kHz oscillator output
RTC_ALARM / $\overline{\text{UART2_CTS}}$ / GP0[8] / $\overline{\text{DEEPSLEEP}}$	F4	O	CP[0]	A	RTC Alarm
RTC_CVDD	L14	PWR	—	—	RTC module core power (isolated from chip CV_{DD})
RTC_V_{ss}	H18	GND	—	—	Oscillator ground

(1) I = Input, O = Output, I/O = Bidirectional, Z = High impedance, PWR = Supply voltage, GND = Ground, A = Analog signal.
Note: For multiplexed pins where functions have different types (ie., input versus output), the table reflects the pin function direction for that particular peripheral.
(2) IPD = Internal Pulldown resistor; IPU = Internal Pullup resistor; CP[*n*] = configurable pull-up/pull-down (where *n* is the pin group) using the PUPDENA and PUPDSEL registers in the System Module. The pull-up and pull-down control of these pins is not active until the device is out of reset. During reset, all of the pins associated with these registers are pulled down. If the application requires a pull-up, an external pull-up can be used. For electrical specifications on the pull-up and and internal pull-down circuits, see the Device Operating Conditions section.
(3) This signal is part of a dual-voltage IO group (A, B or C). These groups can be operated at 3.3V or 1.8V nominal. The three groups can be operated at independent voltages but all pins withina group will operate at the same voltage. Group A operates at the voltage of power supply DVDD3318_A. Group B operates at the voltage of power supply DVDD3318_B. Group C operates at the voltage of power supply DVDD3318_C.

2.9.4 DEEPSLEEP Power Control

Table 2-8. DEEPSLEEP Power Control Terminal Functions

SIGNAL		TYPE(1)	PULL(2)	POWER GROUP(3)	DESCRIPTION
NAME	NO.				
RTC_ALARM / $\overline{\text{UART2_CTS}}$ / GP0[8] / **$\overline{\text{DEEPSLEEP}}$**	F4	I	CP[0]	A	DEEPSLEEP power control output

(1) I = Input, O = Output, I/O = Bidirectional, Z = High impedance, PWR = Supply voltage, GND = Ground, A = Analog signal.
Note: For multiplexed pins where functions have different types (ie., input versus output), the table reflects the pin function direction for that particular peripheral.
(2) IPD = Internal Pulldown resistor; IPU = Internal Pullup resistor; CP[*n*] = configurable pull-up/pull-down (where *n* is the pin group) using the PUPDENA and PUPDSEL registers in the System Module. The pull-up and pull-down control of these pins is not active until the device is out of reset. During reset, all of the pins associated with these registers are pulled down. If the application requires a pull-up, an external pull-up can be used. For electrical specifications on the pull-up and and internal pull-down circuits, see the Device Operating Conditions section.
(3) This signal is part of a dual-voltage IO group (A, B or C). These groups can be operated at 3.3V or 1.8V nominal. The three groups can be operated at independent voltages but all pins withina group will operate at the same voltage. Group A operates at the voltage of power supply DVDD3318_A. Group B operates at the voltage of power supply DVDD3318_B. Group C operates at the voltage of power supply DVDD3318_C.

Copyright © 2011–2013, Texas Instruments Incorporated

2.9.5 External Memory Interface A (EMIFA)

Table 2-9. External Memory Interface A (EMIFA) Terminal Functions

SIGNAL		TYPE (1)	PULL (2)	POWER GROUP (3)	DESCRIPTION
NAME	NO.				
EMA_D[15] / GP3[7]	E6	I/O	CP[17]	B	EMIFA data bus
EMA_D[14] / GP3[6]	C7	I/O	CP[17]	B	
EMA_D[13] / GP3[5]	B6	I/O	CP[17]	B	
EMA_D[12] / GP3[4]	A6	I/O	CP[17]	B	
EMA_D[11] / GP3[3]	D6	I/O	CP[17]	B	
EMA_D[10] / GP3[2]	A7	I/O	CP[17]	B	
EMA_D[9] / GP3[1]	D9	I/O	CP[17]	B	
EMA_D[8] / GP3[0]	E10	I/O	CP[17]	B	
EMA_D[7] / GP4[15]	D7	I/O	CP[17]	B	
EMA_D[6] / GP4[14]	C6	I/O	CP[17]	B	
EMA_D[5] / GP4[13]	E7	I/O	CP[17]	B	
EMA_D[4] / GP4[12]	B5	I/O	CP[17]	B	
EMA_D[3] / GP4[11]	E8	I/O	CP[17]	B	
EMA_D[2] / GP4[10]	B8	I/O	CP[17]	B	
EMA_D[1] / GP4[9]	A8	I/O	CP[17]	B	
EMA_D[0] / GP4[8]	C9	I/O	CP[17]	B	

(1) I = Input, O = Output, I/O = Bidirectional, Z = High impedance, PWR = Supply voltage, GND = Ground, A = Analog signal.
Note: The pin type shown refers to the input, output or high-impedance state of the pin function when configured as the signal name highlighted in bold. All multiplexed signals may enter a high-impedance state when the configured function is input-only or the configured function supports high-Z operation. All GPIO signals can be used as input or output. For multiplexed pins where functions have different types (ie., input versus output), the table reflects the pin function direction for that particular peripheral.

(2) IPD = Internal Pulldown resistor; IPU = Internal Pullup resistor; CP[*n*] = configurable pull-up/pull-down (where *n* is the pin group) using the PUPDENA and PUPDSEL registers in the System Module. The pull-up and pull-down control of these pins is not active until the device is out of reset. During reset, all of the pins associated with these registers are pulled down. If the application requires a pull-up, an external pull-up can be used. For electrical specifications on the pull-up and and internal pull-down circuits, see the Device Operating Conditions section.

(3) This signal is part of a dual-voltage IO group (A, B or C). These groups can be operated at 3.3V or 1.8V nominal. The three groups can be operated at independent voltages but all pins withina group will operate at the same voltage. Group A operates at the voltage of power supply DVDD3318_A. Group B operates at the voltage of power supply DVDD3318_B. Group C operates at the voltage of power supply DVDD3318_C.

Copyright © 2011–2013, Texas Instruments Incorporated

Table 2-9. External Memory Interface A (EMIFA) Terminal Functions (continued)

SIGNAL NAME	SIGNAL NO.	TYPE(1)	PULL(2)	POWER GROUP(3)	DESCRIPTION
EMA_A[22] / MMCSD0_CMD / PRU1_R30[30] / GP4[6]	A10	O	CP[18]	B	EMIFA address bus
EMA_A[21] / MMCSD0_DAT[0] / PRU1_R30[29] / GP4[5]	B10	O	CP[18]	B	
EMA_A[20] / MMCSD0_DAT[1] / PRU1_R30[28] / GP4[4]	A11	O	CP[18]	B	
EMA_A[19] / MMCSD0_DAT[2] / PRU1_R30[27] / GP4[3]	C10	O	CP[18]	B	
EMA_A[18] / MMCSD0_DAT[3] / PRU1_R30[26] / GP4[2]	E11	O	CP[18]	B	
EMA_A[17] / MMCSD0_DAT[4] / PRU1_R30[25] / GP4[1]	B11	O	CP[18]	B	
EMA_A[16] / MMCSD0_DAT[5] / PRU1_R30[24] / GP4[0]	E12	O	CP[18]	B	
EMA_A[15] / MMCSD0_DAT[6] / PRU1_R30[23] / GP5[15] / PRU1_R31[23]	C11	O	CP[19]	B	
EMA_A[14] / MMCSD0_DAT[7] / PRU1_R30[22] / GP5[14] / PRU1_R31[22]	A12	O	CP[19]	B	
EMA_A[13] /PRU0_R30[21] / PRU1_R30[21] / GP5[13] / PRU1_R31[21]	D11	O	CP[19]	B	
EMA_A[12] / PRU1_R30[20] / GP5[12] / PRU1_R31[20]	D13	O	CP[19]	B	
EMA_A[11] / PRU1_R30[19] / GP5[11] / PRU1_R31[19]	B12	O	CP[19]	B	
EMA_A[10] / PRU1_R30[18] / GP5[10] / PRU1_R31[18]	C12	O	CP[19]	B	
EMA_A[9] / PRU1_R30[17] / GP5[9]	D12	O	CP[19]	B	
EMA_A[8] / PRU1_R30[16] / GP5[8]	A13	O	CP[19]	B	
EMA_A[7] / PRU1_R30[15] / GP5[7]	B13	O	CP[20]	B	
EMA_A[6] / GP5[6]	E13	O	CP[20]	B	
EMA_A[5] / GP5[5]	C13	O	CP[20]	B	
EMA_A[4] / GP5[4]	A14	O	CP[20]	B	
EMA_A[3] / GP5[3]	D14	O	CP[20]	B	
EMA_A[2] / GP5[2]	B14	O	CP[20]	B	
EMA_A[1] / GP5[1]	D15	O	CP[20]	B	
EMA_A[0] / GP5[0]	C14	O	CP[20]	B	
EMA_BA[0] / GP2[8]	C15	O	CP[16]	B	EMIFA bank address
EMA_BA[1] / GP2[9]	A15	O	CP[16]	B	
EMA_CLK / PRU0_R30[5] / GP2[7] / PRU0_R31[5]	B7	O	CP[16]	B	EMIFA clock
EMA_SDCKE / PRU0_R30[4] / GP2[6] / PRU0_R31[4]	D8	O	CP[16]	B	EMIFA SDRAM clock enable
$\overline{\text{EMA_RAS}}$ / PRU0_R30[3] / GP2[5] / PRU0_R31[3]	A16	O	CP[16]	B	EMIFA SDRAM row address strobe
$\overline{\text{EMA_CAS}}$ / PRU0_R30[2] / GP2[4] / PRU0_R31[2]	A9	O	CP[16]	B	EMIFA SDRAM column address strobe
$\overline{\text{EMA_CS[0]}}$ / GP2[0]	A18	O	CP[16]	B	EMIFA SDRAM Chip Select
$\overline{\text{EMA_CS[2]}}$ / GP3[15]	B17	O	CP[16]	B	EMIFA Async chip select
$\overline{\text{EMA_CS[3]}}$ / GP3[14]	A17	O	CP[16]	B	
$\overline{\text{EMA_CS[4]}}$ / GP3[13]	F9	O	CP[16]	B	
$\overline{\text{EMA_CS[5]}}$ / GP3[12]	B16	O	CP[16]	B	
EMA_A_R$\overline{\text{W}}$ / GP3[9]	D10	O	CP[16]	B	EMIFA Async Read/Write control

Copyright © 2011–2013, Texas Instruments Incorporated

Table 2-9. External Memory Interface A (EMIFA) Terminal Functions (continued)

SIGNAL		TYPE(1)	PULL(2)	POWER GROUP(3)	DESCRIPTION
NAME	NO.				
$\overline{\text{EMA_WE}}$ / GP3[11]	B9	O	CP[16]	B	EMIFA SDRAM write enable
$\overline{\text{EMA_WEN_DQM[1]}}$ / GP2[2]	A5	O	CP[16]	B	EMIFA write enable/data mask for EMA_D[15:8]
$\overline{\text{EMA_WEN_DQM[0]}}$ / GP2[3]	C8	O	CP[16]	B	EMIFA write enable/data mask for EMA_D[7:0]
$\overline{\text{EMA_OE}}$ / GP3[10]	B15	O	CP[16]	B	EMIFA output enable
EMA_WAIT[0] / PRU0_R30[0] / GP3[8] / PRU0_R31[0]	B18	I	CP[16]	B	EMIFA wait input/interrupt
EMA_WAIT[1] / PRU0_R30[1] / GP2[1] / PRU0_R31[1]	B19	I	CP[16]	B	

2.9.6 DDR2 Controller (DDR2)

Table 2-10. DDR2 Controller (DDR2) Terminal Functions

SIGNAL		TYPE (1)	PULL (2)	DESCRIPTION
NAME	NO.			
DDR_D[15]	W10	I/O	IPD	DDR2 SDRAM data bus
DDR_D[14]	U11	I/O	IPD	
DDR_D[13]	V10	I/O	IPD	
DDR_D[12]	U10	I/O	IPD	
DDR_D[11]	T12	I/O	IPD	
DDR_D[10]	T10	I/O	IPD	
DDR_D[9]	T11	I/O	IPD	
DDR_D[8]	T13	I/O	IPD	
DDR_D[7]	W11	I/O	IPD	
DDR_D[6]	W12	I/O	IPD	
DDR_D[5]	V12	I/O	IPD	
DDR_D[4]	V13	I/O	IPD	
DDR_D[3]	U13	I/O	IPD	
DDR_D[2]	V14	I/O	IPD	
DDR_D[1]	U14	I/O	IPD	
DDR_D[0]	U15	I/O	IPD	
DDR_A[13]	T5	O	IPD	DDR2 row/column address
DDR_A[12]	V4	O	IPD	
DDR_A[11]	T4	O	IPD	
DDR_A[10]	W4	O	IPD	
DDR_A[9]	T6	O	IPD	
DDR_A[8]	U4	O	IPD	
DDR_A[7]	U6	O	IPD	
DDR_A[6]	W5	O	IPD	
DDR_A[5]	V5	O	IPD	
DDR_A[4]	U5	O	IPD	
DDR_A[3]	V6	O	IPD	
DDR_A[2]	W6	O	IPD	
DDR_A[1]	T7	O	IPD	
DDR_A[0]	U7	O	IPD	
DDR_CLKP	W8	O	IPD	DDR2 clock (positive)
$\overline{\text{DDR_CLKN}}$	W7	O	IPD	DDR2 clock (negative)
DDR_CKE	V7	O	IPD	DDR2 clock enable
$\overline{\text{DDR_WE}}$	T8	O	IPD	DDR2 write enable
$\overline{\text{DDR_RAS}}$	W9	O	IPD	DDR2 row address strobe
$\overline{\text{DDR_CAS}}$	U9	O	IPD	DDR2 column address strobe
$\overline{\text{DDR_CS}}$	V9	O	IPD	DDR2 chip select
DDR_DQM[0]	W13	O	IPD	DDR2 data mask outputs
DDR_DQM[1]	R10	O	IPD	

(1) I = Input, O = Output, I/O = Bidirectional, Z = High impedance, PWR = Supply voltage, GND = Ground, A = Analog signal.
Note: The pin type shown refers to the input, output or high-impedance state of the pin function when configured as the signal name highlighted in bold. All multiplexed signals may enter a high-impedance state when the configured function is input-only or the configured function supports high-Z operation. All GPIO signals can be used as input or output. For multiplexed pins where functions have different types (ie., input versus output), the table reflects the pin function direction for that particular peripheral.

(2) IPD = Internal Pulldown resistor; IPU = Internal Pullup resistor; CP[*n*] = configurable pull-up/pull-down (where *n* is the pin group) using the PUPDENA and PUPDSEL registers in the System Module.

Copyright © 2011–2013, Texas Instruments Incorporated

Table 2-10. DDR2 Controller (DDR2) Terminal Functions (continued)

SIGNAL		TYPE(1)	PULL(2)	DESCRIPTION
NAME	NO.			
DDR_DQS[0]	T14	I/O	IPD	DDR2 data strobe inputs/outputs
DDR_DQS[1]	V11	I/O	IPD	
DDR_BA[2]	U8	O	IPD	DDR2 SDRAM bank address
DDR_BA[1]	T9	O	IPD	
DDR_BA[0]	V8	O	IPD	
DDR_DQGATE0	R11	O	IPD	DDR2 loopback signal for external DQS gating. Route to DDR and back to DDR_DQGATE1 with same constraints as used for DDR clock and data.
DDR_DQGATE1	R12	I	IPD	DDR2 loopback signal for external DQS gating. Route to DDR and back to DDR_DQGATE0 with same constraints as used for DDR clock and data.
DDR_ZP	U12	O	—	DDR2 reference output for drive strength calibration of N and P channel outputs. Tie to ground via 50 ohm resistor @ 5% tolerance.
DDR_VREF	R6	I	—	DDR voltage input for the DDR2/mDDR I/O buffers. Note even in the case of mDDR an external resistor divider connected to this pin is necessary.
DDR_DVDD18	N10, P10, N9, P9, R9, P8, R8, P7, R7, N6	PWR	—	DDR PHY 1.8V power supply pins

Copyright © 2011–2013, Texas Instruments Incorporated

2.9.7 Serial Peripheral Interface Modules (SPI)

Table 2-11. Serial Peripheral Interface (SPI) Terminal Functions

SIGNAL NAME	SIGNAL NO.	TYPE (1)	PULL (2)	POWER GROUP (3)	DESCRIPTION
SPI0					
SPI0_CLK / EPWM0A / GP1[8] / MII_RXCLK	D19	I/O	CP[7]	A	SPI0 clock
$\overline{\text{SPI0_ENA}}$ / EPWM0B / PRU0_R30[6] / MII_RXDV	C17	I/O	CP[7]	A	SPI0 enable
$\overline{\text{SPI0_SCS[0]}}$ / TM64P1_OUT12 / GP1[6] / MDIO_D / TM64P1_IN12	D17	I/O	CP[10]	A	SPI0 chip selects
$\overline{\text{SPI0_SCS[1]}}$ / TM64P0_OUT12 / GP1[7] / MDIO_CLK / TM64P0_IN12	E16	I/O	CP[10]	A	
$\overline{\text{SPI0_SCS[2]}}$ / $\overline{\text{UART0_RTS}}$ / GP8[1] / MII_RXD[0] /SATA_CP_DET	D16	I/O	CP[9]	A	
$\overline{\text{SPI0_SCS[3]}}$ / $\overline{\text{UART0_CTS}}$ / GP8[2] / MII_RXD[1] / SATA_MP_SWITCH	E17	I/O	CP[9]	A	
$\overline{\text{SPI0_SCS[4]}}$ / UART0_TXD / GP8[3] / MII_RXD[2]	D18	I/O	CP[8]	A	
$\overline{\text{SPI0_SCS[5]}}$ / UART0_RXD / GP8[4] / MII_RXD[3]	C19	I/O	CP[8]	A	
SPI0_SIMO / EPWMSYNCO / GP8[5] / MII_CRS	C18	I/O/Z	CP[7]	A	SPI0 data slave-in-master-out
SPI0_SOMI / EPWMSYNCI / GP8[6] / MII_RXER	C16	I/O/Z	CP[7]	A	SPI0 data slave-out-master-in
SPI1					
SPI1_CLK / GP2[13]	G19	I/O	CP[15]	A	SPI1 clock
$\overline{\text{SPI1_ENA}}$ / GP2[12]	H16	I/O	CP[15]	A	SPI1 enable
$\overline{\text{SPI1_SCS[0]}}$ / EPWM1B / PRU0_R30[7] / GP2[14] / TM64P3_IN12	E19	I/O	CP[14]	A	SPI1 chip selects
$\overline{\text{SPI1_SCS[1]}}$ / EPWM1A / PRU0_R30[8] / GP2[15] / TM64P2_IN12	F18	I/O	CP[14]	A	
$\overline{\text{SPI1_SCS[2]}}$ / UART1_TXD / SATA_CP_POD /GP1[0]	F19	I/O	CP[13]	A	
$\overline{\text{SPI1_SCS[3]}}$ / UART1_RXD / SATA_LED /GP1[1]	E18	I/O	CP[13]	A	
$\overline{\text{SPI1_SCS[4]}}$ / UART2_TXD / I2C1_SDA /GP1[2]	F16	I/O	CP[12]	A	
$\overline{\text{SPI1_SCS[5]}}$ / UART2_RXD / I2C1_SCL /GP1[3]	F17	I/O	CP[12]	A	
$\overline{\text{SPI1_SCS[6]}}$ / I2C0_SDA / TM64P3_OUT12 / GP1[4]	G18	I/O	CP[11]	A	
$\overline{\text{SPI1_SCS[7]}}$ / I2C0_SCL / TM64P2_OUT12 / GP1[5]	G16	I/O	CP[11]	A	
SPI1_SIMO / GP2[10]	G17	I/O/Z	CP[15]	A	SPI1 data slave-in-master-out
SPI1_SOMI / GP2[11]	H17	I/O/Z	CP[15]	A	SPI1 data slave-out-master-in

(1) I = Input, O = Output, I/O = Bidirectional, Z = High impedance, PWR = Supply voltage, GND = Ground, A = Analog signal.
Note: The pin type shown refers to the input, output or high-impedance state of the pin function when configured as the signal name highlighted in bold. All multiplexed signals may enter a high-impedance state when the configured function is input-only or the configured function supports high-Z operation. All GPIO signals can be used as input or output. For multiplexed pins where functions have different types (ie., input versus output), the table reflects the pin function direction for that particular peripheral.

(2) IPD = Internal Pulldown resistor; IPU = Internal Pullup resistor; CP[*n*] = configurable pull-up/pull-down (where *n* is the pin group) using the PUPDENA and PUPDSEL registers in the System Module. The pull-up and pull-down control of these pins is not active until the device is out of reset. During reset, all of the pins associated with these registers are pulled down. If the application requires a pull-up, an external pull-up can be used. For electrical specifications on the pull-up and and internal pull-down circuits, see the Device Operating Conditions section.

(3) This signal is part of a dual-voltage IO group (A, B or C). These groups can be operated at 3.3V or 1.8V nominal. The three groups can be operated at independent voltages but all pins withina group will operate at the same voltage. Group A operates at the voltage of power supply DVDD3318_A. Group B operates at the voltage of power supply DVDD3318_B. Group C operates at the voltage of power supply DVDD3318_C.

Copyright © 2011–2013, Texas Instruments Incorporated

2.9.8 Programmable Real-Time Unit (PRU)

Table 2-12. Programmable Real-Time Unit (PRU) Terminal Functions

SIGNAL NAME	SIGNAL NO.	TYPE (1)	PULL (2)	POWER GROUP (3)	DESCRIPTION
PRU0_R30[31] / $\overline{\text{UHPI_HRDY}}$ / PRU1_R30[12] / GP6[13]	R17	O	CP[23]	C	PRU0 Output Signals
PRU0_R30[30] / $\overline{\text{UHPI_HINT}}$ / PRU1_R30[11] / GP6[12]	R16	O	CP[23]	C	
PRU0_R30[29] / UHPI_HCNTL0 / UPP_CHA_CLOCK / GP6[11]	U17	O	CP[24]	C	
PRU0_R30[28] / UHPI_HCNTL1 / UPP_CHA_START / GP6[10]	W15	O	CP[24]	C	
PRU0_R30[27] / UHPI_HHWIL / UPP_CHA_ENABLE / GP6[9]	U16	O	CP[24]	C	
PRU0_R30[26] / UHPI_HR$\overline{\text{W}}$ / UPP_CHA_WAIT / GP6[8] / PRU1_R31[17]	T15	O	CP[24]	C	
PRU0_R30[25] / MMCSD1_DAT[0] / UPP_CHB_CLOCK / GP8[15] / PRU1_R31[27]	G1	O	CP30]	C	
PRU0_R30[24] / MMCSD1_CLK / UPP_CHB_START / GP8[14] / PRU1_R31[26]	G2	O	CP[30]	C	
PRU0_R30[23] / MMCSD1_CMD / UPP_CHB_ENABLE / GP8[13] / PRU1_R31[25]	J4	O	CP[30]	C	
PRU0_R30[22] / PRU1_R30[8] / UPP_CHB_WAIT / GP8[12] / PRU1_R31[24]	G3	O	CP[30]	C	
EMA_A[13] / **PRU0_R30[21]** / PRU1_R30[21] / GP5[13] / PRU1_R31[21]	D11	O	CP[19]	B	
ACLKR / **PRU0_R30[20] /** GP0[15] / PRU0_R31[22]	A1	O	CP[0]	A	
ACLKX / **PRU0_R30[19]** / GP0[14] / PRU0_R31[21]	B1	O	CP[0]	A	
AHCLKR / **PRU0_R30[18]** / $\overline{\text{UART1_RTS}}$ / GP0[11] / PRU0_R31[18]	A2	O	CP[0]	A	
AXR7 / EPWM1TZ[0] / **PRU0_R30[17]** / GP1[15] / PRU0_R31[7]	D2	O	CP[4]	A	

(1) I = Input, O = Output, I/O = Bidirectional, Z = High impedance, PWR = Supply voltage, GND = Ground, A = Analog signal.
Note: The pin type shown refers to the input, output or high-impedance state of the pin function when configured as the signal name highlighted in bold. All multiplexed signals may enter a high-impedance state when the configured function is input-only or the configured function supports high-Z operation. All GPIO signals can be used as input or output. For multiplexed pins where functions have different types (ie., input versus output), the table reflects the pin function direction for that particular peripheral.

(2) IPD = Internal Pulldown resistor; IPU = Internal Pullup resistor; CP[*n*] = configurable pull-up/pull-down (where *n* is the pin group) using the PUPDENA and PUPDSEL registers in the System Module. The pull-up and pull-down control of these pins is not active until the device is out of reset. During reset, all of the pins associated with these registers are pulled down. If the application requires a pull-up, an external pull-up can be used. For electrical specifications on the pull-up and and internal pull-down circuits, see the Device Operating Conditions section.

(3) This signal is part of a dual-voltage IO group (A, B or C). These groups can be operated at 3.3V or 1.8V nominal. The three groups can be operated at independent voltages but all pins withina group will operate at the same voltage. Group A operates at the voltage of power supply DVDD3318_A. Group B operates at the voltage of power supply DVDD3318_B. Group C operates at the voltage of power supply DVDD3318_C.

Copyright © 2011–2013, Texas Instruments Incorporated

Table 2-12. Programmable Real-Time Unit (PRU) Terminal Functions (continued)

SIGNAL		TYPE[1]	PULL[2]	POWER GROUP[3]	DESCRIPTION
NAME	NO.				
AMUTE / **PRU0_R30[16]** / $\overline{\text{UART2_RTS}}$ / GP0[9] / PRU0_R31[16]	D5	O	CP[0]	A	PRU0 Output Signals
VP_DIN[15]_VSYNC / UHPI_HD[7] / UPP_D[7] / **PRU0_R30[15]** / PRU0_R31[15]	V18	O	CP[27]	C	
VP_DIN[14]_HSYNC / UHPI_HD[6] / UPP_D[6] / **PRU0_R30[14]** / PRU0_R31[14]	V19	O	CP[27]	C	
VP_DIN[13]_FIELD / UHPI_HD[5] / UPP_D[5] / **PRU0_R30[13]** / PRU0_R31[13]	U19	O	CP[27]	C	
VP_DIN[12] / UHPI_HD[4] / UPP_D[4] / **PRU0_R30[12]** / PRU0_R31[12]	T16	O	CP[27]	C	
VP_DIN[11] / UHPI_HD[3] / UPP_D[3] / **PRU0_R30[11]** / PRU0_R31[11]	R18	O	CP[27]	C	
VP_DIN[10] / UHPI_HD[2] / UPP_D[2] / **PRU0_R30[10]** / PRU0_R31[10]	R19	O	CP[27]	C	
VP_DIN[9] / UHPI_HD[1] / UPP_D[1] / **PRU0_R30[9]** / PRU0_R31[9]	R15	O	CP[27]	C	
$\overline{\text{SPI1_SCS[0]}}$ / EPWM1B / **PRU0_R30[7]** / GP2[14] / TM64P3_IN12	E19	O	CP[14]	A	
$\overline{\text{SPI1_SCS[1]}}$ / EPWM1A / **PRU0_R30[8]** / GP2[15] / TM64P2_IN12	F18	O	CP[14]	A	
$\overline{\text{SPI0_ENA}}$ / EPWM0B / **PRU0_R30[6]** / MII_RXDV	C17	O	CP[7]	A	
EMA_CLK / **PRU0_R30[5]** / GP2[7] / PRU0_R31[5]	B7	O	CP[16]	B	
EMA_SDCKE / **PRU0_R30[4]** / GP2[6] / PRU0_R31[4]	D8	O	CP[16]	B	
EMA_RAS / **PRU0_R30[3]** / GP2[5] / PRU0_R31[3]	A16	O	CP[16]	B	
EMA_CAS / **PRU0_R30[2]** / GP2[4] / PRU0_R31[2]	A9	O	CP[16]	B	
EMA_WAIT[1] / **PRU0_R30[1]** / GP2[1] / PRU0_R31[1]	B19	O	CP[16]	B	
EMA_WAIT[0] / **PRU0_R30[0]** / GP3[8] / PRU0_R31[0]	B18	O	CP[16]	B	

Copyright © 2011–2013, Texas Instruments Incorporated

Table 2-12. Programmable Real-Time Unit (PRU) Terminal Functions (continued)

SIGNAL NAME	SIGNAL NO.	TYPE(1)	PULL(2)	POWER GROUP(3)	DESCRIPTION
VP_DIN[7] / UHPI_HD[15] / UPP_D[15] / RMII_TXD[1] / **PRU0_R31[29]**	U18	I	CP[26]	C	PRU0 Input Signals
VP_DIN[6] / UHPI_HD[14] / UPP_D[14] / RMII_TXD[0] / **PRU0_R31[28]**	V16	I	CP[26]	C	
VP_DIN[5] / UHPI_HD[13] / UPP_D[13] / RMII_TXEN / **PRU0_R31[27]**	R14	I	CP[26]	C	
VP_DIN[4] / UHPI_HD[12] / UPP_D[12] / RMII_RXD[1] / **PRU0_R31[26]**	W16	I	CP[26]	C	
VP_DIN[3] / UHPI_HD[11] / UPP_D[11] / RMII_RXD[0] / **PRU0_R31[25]**	V17	I	CP[26]	C	
VP_DIN[2] / UHPI_HD[10] / UPP_D[10] / RMII_RXER / **PRU0_R31[24]**	W17	I	CP[26]	C	
VP_DIN[1] / UHPI_HD[9] / UPP_D[9] / RMII_MHZ_50_CLK / **PRU0_R31[23]**	W18	I	CP[26]	C	
ACLKR / PRU0_R30[20] / GP0[15] / **PRU0_R31[22]**	A1	I	CP[0]	A	
ACLKX / PRU0_R30[19] / GP0[14] / **PRU0_R31[21]**	B1	I	CP[0]	A	
AFSR / GP0[13] / **PRU0_R31[20]**	C2	I	CP[0]	A	
AFSX / GP0[12] / **PRU0_R31[19]**	B2	I	CP[0]	A	
AHCLKR / PRU0_R30[18] / $\overline{\text{UART1_RTS}}$ / GP0[11] / **PRU0_R31[18]**	A2	I	CP[0]	A	
AHCLKX / USB_REFCLKIN / $\overline{\text{UART1_CTS}}$ / GP0[10] / **PRU0_R31[17]**	A3	I	CP[0]	A	
AMUTE / PRU0_R30[16] / $\overline{\text{UART2_RTS}}$ / GP0[9] / **PRU0_R31[16]**	D5	I	CP[0]	A	
VP_DIN[15]_VSYNC / UHPI_HD[7] / UPP_D[7] / PRU0_R30[15] / **PRU0_R31[15]**	V18	I	CP[27]	C	
VP_DIN[14]_HSYNC / UHPI_HD[6] / UPP_D[6] / PRU0_R30[14] / **PRU0_R31[14]**	V19	I	CP[27]	C	
VP_DIN[13]_FIELD / UHPI_HD[5] / UPP_D[5] / PRU0_R30[13] / **PRU0_R31[13]**	U19	I	CP[27]	C	
VP_DIN[12] / UHPI_HD[4] / UPP_D[4] / PRU0_R30[12] / **PRU0_R31[12]**	T16	I	CP[27]	C	
VP_DIN[11] / UHPI_HD[3] / UPP_D[3] / PRU0_R30[11] / **PRU0_R31[11]**	R18	I	CP[27]	C	
VP_DIN[10] / UHPI_HD[2] / UPP_D[2] / PRU0_R30[10] / **PRU0_R31[10]**	R19	I	CP[27]	C	
VP_DIN[9] / UHPI_HD[1] / UPP_D[1] / PRU0_R30[9] / **PRU0_R31[9]**	R15	I	CP[27]	C	
AXR8 / CLKS1 / ECAP1_APWM1 / GP0[0] / **PRU0_R31[8]**	E4	I	CP[3]	A	
AXR7 / EPWM1TZ[0] / PRU0_R30[17] / GP1[15] / **PRU0_R31[7]**	D2	I	CP[4]	A	
AXR6 / CLKR0 / GP1[14] / MII_TXEN / **PRU0_R31[6]**	C1	I	CP[5]	A	
EMA_CLK / PRU0_R30[5] / GP2[7] / **PRU0_R31[5]**	B7	I	CP[16]	B	
EMA_SDCKE / PRU0_R30[4] / GP2[6] / **PRU0_R31[4]**	D8	I	CP[16]	B	
EMA_RAS / PRU0_R30[3] / GP2[5] / **PRU0_R31[3]**	A16	I	CP[16]	B	
EMA_CAS / PRU0_R30[2] / GP2[4] / **PRU0_R31[2]**	A9	I	CP[16]	B	
EMA_WAIT[1] / PRU0_R30[1] / GP2[1] / **PRU0_R31[1]**	B19	I	CP[16]	B	
EMA_WAIT[0] / PRU0_R30[0] / GP3[8] / **PRU0_R31[0]**	B18	I	CP[16]	B	

Copyright © 2011–2013, Texas Instruments Incorporated

Table 2-12. Programmable Real-Time Unit (PRU) Terminal Functions (continued)

SIGNAL NAME	SIGNAL NO.	TYPE(1)	PULL(2)	POWER GROUP(3)	DESCRIPTION
MMCSD0_CLK / **PRU1_R30[31]** /GP4[7]	E9	O	CP[18]	B	PRU1 Output Signals
EMA_A[22] / MMCSD0_CMD / **PRU1_R30[30]** / GP4[6]	A10	O	CP[18]	B	
EMA_A[21] / MMCSD0_DAT[0] / **PRU1_R30[29]** / GP4[5]	B10	O	CP[18]	B	
EMA_A[20] / MMCSD0_DAT[1] / **PRU1_R30[28]** / GP4[4]	A11	O	CP[18]	B	
EMA_A[19] / MMCSD0_DAT[2] / **PRU1_R30[27]** / GP4[3]	C10	O	CP[18]	B	
EMA_A[18] / MMCSD0_DAT[3] / **PRU1_R30[26]** / GP4[2]	E11	O	CP[18]	B	
EMA_A[17] / MMCSD0_DAT[4] / **PRU1_R30[25]** / GP4[1]	B11	O	CP[18]	B	
EMA_A[16] / MMCSD0_DAT[5] / **PRU1_R30[24]** / GP4[0]	E12	O	CP[18]	B	
EMA_A[15] / MMCSD0_DAT[6] / **PRU1_R30[23]** / GP5[15] / PRU1_R31[23]	C11	O	CP[19]	B	
EMA_A[14] / MMCSD0_DAT[7] / **PRU1_R30[22]** / GP5[14] / PRU1_R31[22]	A12	O	CP[19]	B	
EMA_A[13] / PRU0_R30[21] / **PRU1_R30[21]** / GP5[13] / PRU1_R31[21]	D11	O	CP[19]	B	
EMA_A[12] / **PRU1_R30[20]** / GP5[12] / PRU1_R31[20]	D13	O	CP[19]	B	
EMA_A[11] / **PRU1_R30[19]** / GP5[11] / PRU1_R31[19]	B12	O	CP[19]	B	
EMA_A[10] / **PRU1_R30[18]** / GP5[10] / PRU1_R31[18]	C12	O	CP[19]	B	
EMA_A[9] / **PRU1_R30[17]** / GP5[9]	D12	O	CP[19]	B	
EMA_A[8] / **PRU1_R30[16]** / GP5[8]	A13	O	CP[19]	B	
EMA_A[7] / **PRU1_R30[15]** / GP5[7]	B13	O	CP[20]	B	
RESETOUT / UHPI_HAS / **PRU1_R30[14]** / GP6[15]	T17	O	CP[21]	C	
CLKOUT / UHPI_HDS2 / **PRU1_R30[13]** / GP6[14]	T18	O	CP[22]	C	
PRU0_R30[31] / $\overline{\text{UHPI_HRDY}}$ / **PRU1_R30[12]** / GP6[13]	R17	O	CP[23]	C	
PRU0_R30[30] / $\overline{\text{UHPI_HINT}}$ / **PRU1_R30[11]** / GP6[12]	R16	O	CP[23]	C	
VP_CLKIN0 / $\overline{\text{UHPI_HCS}}$ / **PRU1_R30[10]** / GP6[7] / UPP_2xTXCLK	W14	O	CP[25]	C	
VP_CLKIN1 / $\overline{\text{UHPI_HDS1}}$ / **PRU1_R30[9]** / GP6[6] / PRU1_R31[16]	V15	O	CP[25]	C	
PRU0_R30[22] / **PRU1_R30[8]** / UPP_CHB_WAIT / GP8[12] / PRU1_R31[24]	G3	O	CP[30]	C	
MMCSD1_DAT[7] / LCD_PCLK / **PRU1_R30[7]** / GP8[11]	F1	O	CP[31]	C	
MMCSD1_DAT[6] / LCD_MCLK / **PRU1_R30[6]** / GP8[10] / PRU1_R31[7]	F2	O	CP[31]	C	
MMCSD1_DAT[5] / LCD_HSYNC / **PRU1_R30[5]** / GP8[9] / PRU1_R31[6]	H4	O	CP[31]	C	
MMCSD1_DAT[4] / LCD_VSYNC / **PRU1_R30[4]** / GP8[8] / PRU1_R31[5]	G4	O	CP[31]	C	
VP_CLKIN2 / MMCSD1_DAT[3] / **PRU1_R30[3]** / GP6[4] / PRU1_R31[4]	H3	O	CP[30]	C	
VP_CLKOUT2 / MMCSD1_DAT[2] / **PRU1_R30[2]** / GP6[3] / PRU1_R31[3]	K3	O	CP[30]	C	
VP_CLKIN3 / MMCSD1_DAT[1] / **PRU1_R30[1]** / GP6[2] / PRU1_R31[2]	J3	O	CP[30]	C	
VP_CLKOUT3 / **PRU1_R30[0]** / GP6[1] / PRU1_R31[1]	K4	O	CP[30]	C	

Copyright © 2011–2013, Texas Instruments Incorporated

Table 2-12. Programmable Real-Time Unit (PRU) Terminal Functions (continued)

SIGNAL NAME	SIGNAL NO.	TYPE(1)	PULL(2)	POWER GROUP(3)	DESCRIPTION
VP_DIN[0] / UHPI_HD[8] / UPP_D[8] / RMII_CRS_DV / **PRU1_R31[29]**	W19	I	CP[26]	C	PRU1 Input Signals
$\overline{\text{LCD_AC_ENB_CS}}$ / GP6[0] / **PRU1_R31[28]**	R5	I	CP[31]	C	
PRU0_R30[25] / MMCSD1_DAT[0] / UPP_CHB_CLOCK / GP8[15] / **PRU1_R31[27]**	G1	I	CP[30]	C	
PRU0_R30[24] / MMCSD1_CLK / UPP_CHB_START / GP8[14] / **PRU1_R31[26]**	G2	I	CP[30]	C	
PRU0_R30[23] / MMCSD1_CMD / UPP_CHB_ENABLE / GP8[13] / **PRU1_R31[25]**	J4	I	CP[30]	C	
PRU0_R30[22] / PRU1_R30[8] / UPP_CHB_WAIT / GP8[12] / **PRU1_R31[24]**	G3	I	CP[30]	C	
MMCSD0_CLK / PRU1_R30[31] /GP4[7]	E9	I	CP[18]	B	
EMA_A[22] / MMCSD0_CMD / PRU1_R30[30] / GP4[6]	A10	I	CP[18]	B	
EMA_A[21] / MMCSD0_DAT[0] / PRU1_R30[29] / GP4[5]	B10	I	CP[18]	B	
EMA_A[20] / MMCSD0_DAT[1] / PRU1_R30[28] / GP4[4]	A11	I	CP[18]	B	
EMA_A[19] / MMCSD0_DAT[2] / PRU1_R30[27] / GP4[3]	C10	I	CP[18]	B	
EMA_A[18] / MMCSD0_DAT[3] / PRU1_R30[26] / GP4[2]	E11	I	CP[18]	B	
PRU0_R30[26] / UHPI_HR$\overline{\text{W}}$ / UPP_CHA_WAIT / GP6[8] / **PRU1_R31[17]**	T15	I	CP[24]	C	
VP_CLKIN1 / $\overline{\text{UHPI_HDS1}}$ / PRU1_R30[9] / GP6[6] / **PRU1_R31[16]**	V15	I	CP[25]	C	
VP_DOUT[7] / LCD_D[7] / UPP_XD[15] / GP7[15] / **PRU1_R31[15]**	U2	I	CP[28]	C	
VP_DOUT[6] / LCD_D[6] / UPP_XD[14] / GP7[14] / **PRU1_R31[14]**	U1	I	CP[28]	C	
VP_DOUT[5] / LCD_D[5] / UPP_XD[13] / GP7[13] / **PRU1_R31[13]**	V3	I	CP[28]	C	
VP_DOUT[4] / LCD_D[4] / UPP_XD[12] / GP7[12] / **PRU1_R31[12]**	V2	I	CP[28]	C	
VP_DOUT[3] / LCD_D[3] / UPP_XD[11] / GP7[11] / **PRU1_R31[11]**	V1	I	CP[28]	C	
VP_DOUT[2] / LCD_D[2] / UPP_XD[10] / GP7[10] / **PRU1_R31[10]**	W3	I	CP[28]	C	
VP_DOUT[1] / LCD_D[1] / UPP_XD[9] / GP7[9] / **PRU1_R31[9]**	W2	I	CP[28]	C	
VP_DOUT[0] / LCD_D[0] / UPP_XD[8] / GP7[8] / **PRU1_R31[8]**	W1	I	CP[28]	C	
MMCSD1_DAT[6] / LCD_MCLK / PRU1_R30[6] / GP8[10] / **PRU1_R31[7]**	F2	I	CP[31]	C	
MMCSD1_DAT[5] / LCD_HSYNC / PRU1_R30[5] / GP8[9] / **PRU1_R31[6]**	H4	I	CP[31]	C	
MMCSD1_DAT[4] / LCD_VSYNC / PRU1_R30[4] / GP8[8] / **PRU1_R31[5]**	G4	I	CP[31]	C	
VP_CLKIN2 / MMCSD1_DAT[3] / PRU1_R30[3] / GP6[4] / **PRU1_R31[4]**	H3	I	CP[30]	C	
VP_CLKOUT2 / MMCSD1_DAT[2] / PRU1_R30[2] / GP6[3] / **PRU1_R31[3]**	K3	I	CP[30]	C	
VP_CLKIN3 / MMCSD1_DAT[1] / PRU1_R30[1] / GP6[2] / **PRU1_R31[2]**	J3	I	CP[30]	C	
VP_CLKOUT3 / PRU1_R30[0] / GP6[1] / **PRU1_R31[1]**	K4	I	CP[30]	C	
VP_DIN[8] / UHPI_HD[0] / UPP_D[0] / GP6[5] / **PRU1_R31[0]**	P17	I	CP[27]	C	

Copyright © 2011–2013, Texas Instruments Incorporated

2.9.9 Enhanced Capture/Auxiliary PWM Modules (eCAP0)

The eCAP Module pins function as either input captures or auxiliary PWM 32-bit outputs, depending upon how the eCAP module is programmed.

Table 2-13. Enhanced Capture Module (eCAP) Terminal Functions

SIGNAL		TYPE(1)	PULL(2)	POWER GROUP(3)	DESCRIPTION
NAME	NO.				
eCAP0					
AXR0 / **ECAP0_APWM0** / GP8[7] / MII_TXD[0] / CLKS0	F3	I/O	CP[6]	A	enhanced capture 0 input or auxiliary PWM 0 output
eCAP1					
AXR8 / CLKS1 / **ECAP1_APWM1** / GP0[0] / PRU0_R31[8]	E4	I/O	CP[3]	A	enhanced capture 1 input or auxiliary PWM 1 output
eCAP2					
AXR15 / EPWM0TZ[0] / **ECAP2_APWM2** / GP0[7]	A4	I/O	CP[1]	A	enhanced capture 2 input or auxiliary PWM 2 output

(1) I = Input, O = Output, I/O = Bidirectional, Z = High impedance, PWR = Supply voltage, GND = Ground, A = Analog signal.
Note: The pin type shown refers to the input, output or high-impedance state of the pin function when configured as the signal name highlighted in bold. All multiplexed signals may enter a high-impedance state when the configured function is input-only or the configured function supports high-Z operation. All GPIO signals can be used as input or output. For multiplexed pins where functions have different types (ie., input versus output), the table reflects the pin function direction for that particular peripheral.

(2) IPD = Internal Pulldown resistor; IPU = Internal Pullup resistor; CP[*n*] = configurable pull-up/pull-down (where *n* is the pin group) using the PUPDENA and PUPDSEL registers in the System Module. The pull-up and pull-down control of these pins is not active until the device is out of reset. During reset, all of the pins associated with these registers are pulled down. If the application requires a pull-up, an external pull-up can be used. For electrical specifications on the pull-up and and internal pull-down circuits, see the Device Operating Conditions section.

(3) This signal is part of a dual-voltage IO group (A, B or C). These groups can be operated at 3.3V or 1.8V nominal. The three groups can be operated at independent voltages but all pins withina group will operate at the same voltage. Group A operates at the voltage of power supply DVDD3318_A. Group B operates at the voltage of power supply DVDD3318_B. Group C operates at the voltage of power supply DVDD3318_C.

Copyright © 2011–2013, Texas Instruments Incorporated

2.9.10 Enhanced Pulse Width Modulators (eHRPWM)

Table 2-14. Enhanced Pulse Width Modulator (eHRPWM) Terminal Functions

SIGNAL		TYPE (1)	PULL (2)	POWER GROUP (3)	DESCRIPTION
NAME	NO.				
eHRPWM0					
SPI0_CLK / **EPWM0A** / GP1[8] / MII_RXCLK	D19	I/O	CP[7]	A	eHRPWM0 A output (with high-resolution)
$\overline{\text{SPI0_ENA}}$ / **EPWM0B** / PRU0_R30[6] / MII_RXDV	C17	I/O	CP[7]	A	eHRPWM0 B output
AXR15 / **EPWM0TZ[0]** / ECAP2_APWM2 / GP0[7]	A4	I/O	CP[1]	A	eHRPWM0 trip zone input
SPI0_SOMI / **EPWMSYNCI** / GP8[6] / MII_RXER	C16	I/O	CP[7]	A	eHRPWM0 sync input
SPI0_SIMO / **EPWMSYNCO** / GP8[5] / MII_CRS	C18	I/O	CP[7]	A	eHRPWM0 sync output
eHRPWM1					
$\overline{\text{SPI1_SCS[1]}}$ / **EPWM1A** / PRU0_R30[8] / GP2[15] / TM64P2_IN12	F18	I/O	CP[14]	A	eHRPWM1 A output (with high-resolution)
$\overline{\text{SPI1_SCS[0]}}$ / **EPWM1B** / PRU0_R30[7] / GP2[14] / TM64P3_IN12	E19	I/O	CP[14]	A	eHRPWM1 B output
AXR7 / **EPWM1TZ[0]** / PRU0_R30[17] / GP1[15] / PRU0_R31[7]	D2	I/O	CP[4]	A	eHRPWM1 trip zone input

(1) I = Input, O = Output, I/O = Bidirectional, Z = High impedance, PWR = Supply voltage, GND = Ground, A = Analog signal.
Note: The pin type shown refers to the input, output or high-impedance state of the pin function when configured as the signal name highlighted in bold. All multiplexed signals may enter a high-impedance state when the configured function is input-only or the configured function supports high-Z operation. All GPIO signals can be used as input or output. For multiplexed pins where functions have different types (ie., input versus output), the table reflects the pin function direction for that particular peripheral.

(2) IPD = Internal Pulldown resistor; IPU = Internal Pullup resistor; CP[*n*] = configurable pull-up/pull-down (where *n* is the pin group) using the PUPDENA and PUPDSEL registers in the System Module. The pull-up and pull-down control of these pins is not active until the device is out of reset. During reset, all of the pins associated with these registers are weakly pulled down. If the application requires a pull-up, an external pull-up can be used. For electrical specifications on the pull-up and and internal pull-down circuits, see the Device Operating Conditions section.

(3) This signal is part of a dual-voltage IO group (A, B or C). These groups can be operated at 3.3V or 1.8V nominal. The three groups can be operated at independent voltages but all pins withina group will operate at the same voltage. Group A operates at the voltage of power supply DVDD3318_A. Group B operates at the voltage of power supply DVDD3318_B. Group C operates at the voltage of power supply DVDD3318_C.

Copyright © 2011–2013, Texas Instruments Incorporated

2.9.11 Boot

Table 2-15. Boot Mode Selection Terminal Functions (1)

SIGNAL		TYPE (2)	PULL (3)	POWER GROUP (4)	DESCRIPTION
NAME	NO.				
VP_DOUT[15/]/ LCD_D[15]/ UPP_XD[7] /GP7[7] / **BOOT[7]**	P4	I	CP[29]	C	Boot Mode Selection Pins
VP_DOUT[14] / LCD_D[14] / UPP_XD[6] /GP7[6] / **BOOT[6]**	R3	I	CP[29]	C	
VP_DOUT[13] / LCD_D[13] / UPP_XD[5] /GP7[5] / **BOOT[5]**	R2	I	CP[29]	C	
VP_DOUT[12] / LCD_D[12] / UPP_XD[4] / GP7[4] / **BOOT[4]**	R1	I	CP[29]	C	
VP_DOUT[11] / LCD_D[11] / UPP_XD[3] /GP7[3] / **BOOT[3]**	T3	I	CP[29]	C	
VP_DOUT[10] / LCD_D[10] / UPP_XD[2] /GP7[2] / **BOOT[2]**	T2	I	CP[29]	C	
VP_DOUT[9] / LCD_D[9] / UPP_XD[1] /GP7[1] / **BOOT[1]**	T1	I	CP[29]	C	
VP_DOUT[8] / LCD_D[8] / UPP_XD[0] /GP7[0] / **BOOT[0]**	U3	I	CP[29]	C	

(1) Boot decoding is defined in the bootloader application report.
(2) I = Input, O = Output, I/O = Bidirectional, Z = High impedance, PWR = Supply voltage, GND = Ground, A = Analog signal.
Note: The pin type shown refers to the input, output or high-impedance state of the pin function when configured as the signal name highlighted in bold. All multiplexed signals may enter a high-impedance state when the configured function is input-only or the configured function supports high-Z operation. All GPIO signals can be used as input or output. For multiplexed pins where functions have different types (ie., input versus output), the table reflects the pin function direction for that particular peripheral.
(3) IPD = Internal Pulldown resistor; IPU = Internal Pullup resistor; CP[*n*] = configurable pull-up/pull-down (where *n* is the pin group) using the PUPDENA and PUPDSEL registers in the System Module. The pull-up and pull-down control of these pins is not active until the device is out of reset. During reset, all of the pins associated with these registers are pulled down. If the application requires a pull-up, an external pull-up can be used. For electrical specifications on the pull-up and and internal pull-down circuits, see the Device Operating Conditions section.
(4) This signal is part of a dual-voltage IO group (A, B or C). These groups can be operated at 3.3V or 1.8V nominal. The three groups can be operated at independent voltages but all pins withina group will operate at the same voltage. Group A operates at the voltage of power supply DVDD3318_A. Group B operates at the voltage of power supply DVDD3318_B. Group C operates at the voltage of power supply DVDD3318_C.

Copyright © 2011–2013, Texas Instruments Incorporated

2.9.12 Universal Asynchronous Receiver/Transmitters (UART0, UART1, UART2)

Table 2-16. Universal Asynchronous Receiver/Transmitter (UART) Terminal Functions

SIGNAL		TYPE(1)	PULL(2)	POWER GROUP(3)	DESCRIPTION
NAME	NO.				
UART0					
$\overline{\text{SPI0_SCS[5]}}$ / **UART0_RXD** / GP8[4] / MII_RXD[3]	C19	I	CP[8]	A	UART0 receive data
$\overline{\text{SPI0_SCS[4]}}$ / **UART0_TXD** / GP8[3] / MII_RXD[2]	D18	O	CP[8]	A	UART0 transmit data
$\overline{\text{SPI0_SCS[2]}}$ / **$\overline{\text{UART0_RTS}}$** / GP8[1] / MII_RXD[0] / SATA_CP_DET	D16	O	CP[9]	A	UART0 ready-to-send output
$\overline{\text{SPI0_SCS[3]}}$ / **$\overline{\text{UART0_CTS}}$** / GP8[2] / MII_RXD[1] / SATA_MP_SWITCH	E17	I	CP[9]	A	UART0 clear-to-send input
UART1					
$\overline{\text{SPI1_SCS[3]}}$ / **UART1_RXD** / SATA_LED / GP1[1]	E18	I	CP[13]	A	UART1 receive data
$\overline{\text{SPI1_SCS[2]}}$ / **UART1_TXD** / SATA_CP_POD / GP1[0]	F19	O	CP[13]	A	UART1 transmit data
AHCLKR / PRU0_R30[18] / **$\overline{\text{UART1_RTS}}$** /GP0[11] / PRU0_R31[18]	A2	O	CP[0]	A	UART1 ready-to-send output
AHCLKX / USB_REFCLKIN / **$\overline{\text{UART1_CTS}}$** / GP0[10] / PRU0_R31[17]	A3	I	CP[0]	A	UART1 clear-to-send input
UART2					
$\overline{\text{SPI1_SCS[5]}}$ / **UART2_RXD** / I2C1_SCL /GP1[3]	F17	I	CP[12]	A	UART2 receive data
$\overline{\text{SPI1_SCS[4]}}$ / **UART2_TXD** / I2C1_SDA /GP1[2]	F16	O	CP[12]	A	UART2 transmit data
AMUTE / PRU0_R30[16] / **$\overline{\text{UART2_RTS}}$** / GP0[9] / PRU0_R31[16]	D5	O	CP[0]	A	UART2 ready-to-send output
RTC_ALARM / **$\overline{\text{UART2_CTS}}$** / GP0[8] / $\overline{\text{DEEPSLEEP}}$	F4	I	CP[0]	A	UART2 clear-to-send input

(1) I = Input, O = Output, I/O = Bidirectional, Z = High impedance, PWR = Supply voltage, GND = Ground, A = Analog signal.
Note: The pin type shown refers to the input, output or high-impedance state of the pin function when configured as the signal name highlighted in bold. All multiplexed signals may enter a high-impedance state when the configured function is input-only or the configured function supports high-Z operation. All GPIO signals can be used as input or output. For multiplexed pins where functions have different types (ie., input versus output), the table reflects the pin function direction for that particular peripheral.

(2) IPD = Internal Pulldown resistor; IPU = Internal Pullup resistor; CP[*n*] = configurable pull-up/pull-down (where *n* is the pin group) using the PUPDENA and PUPDSEL registers in the System Module.The pull-up and pull-down control of these pins is not active until the device is out of reset. During reset, all of the pins associated with these registers are weakly pulled down. If the application requires a pull-up, an external pull-up can be used. For electrical specifications on the pull-up and and internal pull-down circuits, see the Device Operating Conditions section.

(3) This signal is part of a dual-voltage IO group (A, B or C). These groups can be operated at 3.3V or 1.8V nominal. The three groups can be operated at independent voltages but all pins withina group will operate at the same voltage. Group A operates at the voltage of power supply DVDD3318_A. Group B operates at the voltage of power supply DVDD3318_B. Group C operates at the voltage of power supply DVDD3318_C.

Copyright © 2011–2013, Texas Instruments Incorporated

2.9.13 Inter-Integrated Circuit Modules(I2C0, I2C1)

Table 2-17. Inter-Integrated Circuit (I2C) Terminal Functions

SIGNAL		TYPE(1)	PULL(2)	POWER GROUP(3)	DESCRIPTION
NAME	NO.				
I2C0					
$\overline{\text{SPI1_SCS[6]}}$ / **I2C0_SDA** / TM64P3_OUT12 / GP1[4]	G18	I/O	CP[11]	A	I2C0 serial data
$\overline{\text{SPI1_SCS[7]}}$ / **I2C0_SCL** / TM64P2_OUT12 / GP1[5]	G16	I/O	CP[11]	A	I2C0 serial clock
I2C1					
$\overline{\text{SPI1_SCS[4]}}$ / UART2_TXD / **I2C1_SDA** / GP1[2]	F16	I/O	CP[12]	A	I2C1 serial data
$\overline{\text{SPI1_SCS[5]}}$ / UART2_RXD / **I2C1_SCL** / GP1[3]	F17	I/O	CP[12]	A	I2C1 serial clock

(1) I = Input, O = Output, I/O = Bidirectional, Z = High impedance, PWR = Supply voltage, GND = Ground, A = Analog signal.
Note: The pin type shown refers to the input, output or high-impedance state of the pin function when configured as the signal name highlighted in bold. All multiplexed signals may enter a high-impedance state when the configured function is input-only or the configured function supports high-Z operation. All GPIO signals can be used as input or output. For multiplexed pins where functions have different types (ie., input versus output), the table reflects the pin function direction for that particular peripheral.

(2) IPD = Internal Pulldown resistor; IPU = Internal Pullup resistor; CP[*n*] = configurable pull-up/pull-down (where *n* is the pin group) using the PUPDENA and PUPDSEL registers in the System Module.The pull-up and pull-down control of these pins is not active until the device is out of reset. During reset, all of the pins associated with these registers are weakly pulled down. If the application requires a pull-up, an external pull-up can be used. For electrical specifications on the pull-up and and internal pull-down circuits, see the Device Operating Conditions section.

(3) This signal is part of a dual-voltage IO group (A, B or C). These groups can be operated at 3.3V or 1.8V nominal. The three groups can be operated at independent voltages but all pins withina group will operate at the same voltage. Group A operates at the voltage of power supply DVDD3318_A. Group B operates at the voltage of power supply DVDD3318_B. Group C operates at the voltage of power supply DVDD3318_C.

Copyright © 2011–2013, Texas Instruments Incorporated

2.9.14 Timers

Table 2-18. Timers Terminal Functions

SIGNAL		TYPE(1)	PULL(2)	POWER GROUP(3)	DESCRIPTION
NAME	NO.				
TIMER0					
$\overline{\text{SPI0_SCS[1]}}$ /TM64P0_OUT12 / GP1[7] / MDIO_CLK / **TM64P0_IN12**	E16	I	CP[10]	A	Timer0 lower input
$\overline{\text{SPI0_SCS[1]}}$ / **TM64P0_OUT12** / GP1[7] / MDIO_CLK / TM64P0_IN12	E16	O	CP[10]	A	Timer0 lower output
TIMER1 (Watchdog)					
$\overline{\text{SPI0_SCS[0]}}$ /TM64P1_OUT12 / GP1[6] / MDIO_D / **TM64P1_IN12**	D17	I	CP[10]	A	Timer1 lower input
$\overline{\text{SPI0_SCS[0]}}$ / **TM64P1_OUT12** / GP1[6] / MDIO_D /TM64P1_IN12	D17	O	CP[10]	A	Timer1 lower output
TIMER2					
$\overline{\text{SPI1_SCS[1]}}$ / EPWM1A / PRU0_R30[8] / GP2[15] / **TM64P2_IN12**	F18	I	CP[14]	A	Timer2 lower input
$\overline{\text{SPI1_SCS[7]}}$ / I2C0_SCL / **TM64P2_OUT12** / GP1[5]	G16	O	CP[11]	A	Timer2 lower output
TIMER3					
$\overline{\text{SPI1_SCS[0]}}$ / EPWM1B / PRU0_R30[7] / GP2[14] / **TM64P3_IN12**	E19	I	CP[14]	A	Timer3 lower input
$\overline{\text{SPI1_SCS[6]}}$ / I2C0_SDA / **TM64P3_OUT12** / GP1[4]	G18	O	CP[11]	A	Timer3 lower output

(1) I = Input, O = Output, I/O = Bidirectional, Z = High impedance, PWR = Supply voltage, GND = Ground, A = Analog signal.
Note: The pin type shown refers to the input, output or high-impedance state of the pin function when configured as the signal name highlighted in bold. All multiplexed signals may enter a high-impedance state when the configured function is input-only or the configured function supports high-Z operation. All GPIO signals can be used as input or output. For multiplexed pins where functions have different types (ie., input versus output), the table reflects the pin function direction for that particular peripheral.

(2) IPD = Internal Pulldown resistor; IPU = Internal Pullup resistor; CP[*n*] = configurable pull-up/pull-down (where *n* is the pin group) using the PUPDENA and PUPDSEL registers in the System Module. The pull-up and pull-down control of these pins is not active until the device is out of reset. During reset, all of the pins associated with these registers are pulled down. If the application requires a pull-up, an external pull-up can be used. For electrical specifications on the pull-up and and internal pull-down circuits, see the Device Operating Conditions section.

(3) This signal is part of a dual-voltage IO group (A, B or C). These groups can be operated at 3.3V or 1.8V nominal. The three groups can be operated at independent voltages but all pins withina group will operate at the same voltage. Group A operates at the voltage of power supply DVDD3318_A. Group B operates at the voltage of power supply DVDD3318_B. Group C operates at the voltage of power supply DVDD3318_C.

Copyright © 2011–2013, Texas Instruments Incorporated

2.9.15 Multichannel Audio Serial Ports (McASP)

Table 2-19. Multichannel Audio Serial Ports Terminal Functions

SIGNAL NAME	SIGNAL NO.	TYPE (1)	PULL (2)	POWER GROUP (3)	DESCRIPTION
McASP0					
AXR15 / EPWM0TZ[0] / ECAP2_APWM2 / GP0[7]	A4	I/O	CP[1]	A	McASP0 serial data
AXR14 / CLKR1 / GP0[6]	B4	I/O	CP[2]	A	
AXR13 / CLKX1 / GP0[5]	B3	I/O	CP[2]	A	
AXR12 / FSR1 / GP0[4]	C4	I/O	CP[2]	A	
AXR11 / FSX1 / GP0[3]	C5	I/O	CP[2]	A	
AXR10 / DR1 / GP0[2]	D4	I/O	CP[2]	A	
AXR9 / DX1 / GP0[1]	C3	I/O	CP[2]	A	
AXR8 / CLKS1 / ECAP1_APWM1 / GP0[0] / PRU0_R31[8]	E4	I/O	CP[3]	A	
AXR7 / EPWM1TZ[0] / PRU0_R30[17] / GP1[15] / PRU0_R31[7]	D2	I/O	CP[4]	A	
AXR6 / CLKR0 / GP1[14] / MII_TXEN / PRU0_R31[6]	C1	I/O	CP[5]	A	
AXR5 / CLKX0 / GP1[13] / MII_TXCLK	D3	I/O	CP[5]	A	
AXR4 / FSR0 / GP1[12] / MII_COL	D1	I/O	CP[5]	A	
AXR3 / FSX0 / GP1[11] / MII_TXD[3]	E3	I/O	CP[5]	A	
AXR2 / DR0 / GP1[10] / MII_TXD[2]	E2	I/O	CP[5]	A	
AXR1 / DX0 / GP1[9] / MII_TXD[1]	E1	I/O	CP[5]	A	
AXR0 / ECAP0_APWM0 / GP8[7] / MII_TXD[0] / CLKS0	F3	I/O	CP[6]	A	
AHCLKX / USB_REFCLKIN / $\overline{\text{UART1_CTS}}$ / GP0[10] / PRU0_R31[17]	A3	I/O	CP[0]	A	McASP0 transmit master clock
ACLKX / PRU0_R30[19]/ GP0[14]/ PRU0_R31[21]	B1	I/O	CP[0]	A	McASP0 transmit bit clock
AFSX / GP0[12] / PRU0_R31[19]	B2	I/O	CP[0]	A	McASP0 transmit frame sync
AHCLKR / PRU0_R30[18] / $\overline{\text{UART1_RTS}}$ /GP0[11] / PRU0_R31[18]	A2	I/O	CP[0]	A	McASP0 receive master clock
ACLKR / PRU0_R30[20] / GP0[15] / PRU0_R31[22]	A1	I/O	CP[0]	A	McASP0 receive bit clock
AFSR / GP0[13] / PRU0_R31[20]	C2	I/O	CP[0]	A	McASP0 receive frame sync
AMUTE / PRU0_R30[16] / $\overline{\text{UART2_RTS}}$ / GP0[9] / PRU0_R31[16]	D5	I/O	CP[0]	A	McASP0 mute output

(1) I = Input, O = Output, I/O = Bidirectional, Z = High impedance, PWR = Supply voltage, GND = Ground, A = Analog signal.
Note: The pin type shown refers to the input, output or high-impedance state of the pin function when configured as the signal name highlighted in bold. All multiplexed signals may enter a high-impedance state when the configured function is input-only or the configured function supports high-Z operation. All GPIO signals can be used as input or output. For multiplexed pins where functions have different types (ie., input versus output), the table reflects the pin function direction for that particular peripheral.

(2) IPD = Internal Pulldown resistor; IPU = Internal Pullup resistor; CP[*n*] = configurable pull-up/pull-down (where *n* is the pin group) using the PUPDENA and PUPDSEL registers in the System Module. The pull-up and pull-down control of these pins is not active until the device is out of reset. During reset, all of the pins associated with these registers are pulled down. If the application requires a pull-up, an external pull-up can be used. For electrical specifications on the pull-up and and internal pull-down circuits, see the Device Operating Conditions section.

(3) This signal is part of a dual-voltage IO group (A, B or C). These groups can be operated at 3.3V or 1.8V nominal. The three groups can be operated at independent voltages but all pins withina group will operate at the same voltage. Group A operates at the voltage of power supply DVDD3318_A. Group B operates at the voltage of power supply DVDD3318_B. Group C operates at the voltage of power supply DVDD3318_C.

Copyright © 2011–2013, Texas Instruments Incorporated

2.9.16 Multichannel Buffered Serial Ports (McBSP)

Table 2-20. Multichannel Buffered Serial Ports (McBSPs) Terminal Functions

SIGNAL		TYPE(1)	PULL(2)	POWER GROUP(3)	DESCRIPTION
NAME	NO.				
McBSP0					
AXR0 / ECAP0_APWM0 / GP8[7] / MII_TXD[0] / **CLKS0**	F3	I	CP[6]	A	McBSP0 sample rate generator clock input
AXR6 / **CLKR0** / GP1[14] / MII_TXEN / PRU0_R31[6]	C1	I/O	CP[5]	A	McBSP0 receive clock
AXR4 / **FSR0** / GP1[12] / MII_COL	D1	I/O	CP[5]	A	McBSP0 receive frame sync
AXR2 / **DR0** / GP1[10] / MII_TXD[2]	E2	I	CP[5]	A	McBSP0 receive data
AXR5 / **CLKX0** / GP1[13] / MII_TXCLK	D3	I/O	CP[5]	A	McBSP0 transmit clock
AXR3 / **FSX0** / GP1[11] / MII_TXD[3]	E3	I/O	CP[5]	A	McBSP0 transmit frame sync
AXR1 / **DX0** / GP1[9] / MII_TXD[1]	E1	O	CP[5]	A	McBSP0 transmit data
McBSP1					
AXR8 / **CLKS1** / ECAP1_APWM1 / GP0[0] / PRU0_R31[8]	E4	I	CP[3]	A	McBSP1 sample rate generator clock input
AXR14 / **CLKR1** / GP0[6]	B4	I/O	CP[2]	A	McBSP1 receive clock
AXR12 / **FSR1** / GP0[4]	C4	I/O	CP[2]	A	McBSP1 receive frame sync
AXR10 / **DR1** / GP0[2]	D4	I	CP[2]	A	McBSP1 receive data
AXR13 / **CLKX1** / GP0[5]	B3	I/O	CP[2]	A	McBSP1 transmit clock
AXR11 / **FSX1** / GP0[3]	C5	I/O	CP[2]	A	McBSP1 transmit frame sync
AXR9 / **DX1** / GP0[1]	C3	O	CP[2]	A	McBSP1 transmit data

(1) I = Input, O = Output, I/O = Bidirectional, Z = High impedance, PWR = Supply voltage, GND = Ground, A = Analog signal.
Note: The pin type shown refers to the input, output or high-impedance state of the pin function when configured as the signal name highlighted in bold. All multiplexed signals may enter a high-impedance state when the configured function is input-only or the configured function supports high-Z operation. All GPIO signals can be used as input or output. For multiplexed pins where functions have different types (ie., input versus output), the table reflects the pin function direction for that particular peripheral.

(2) IPD = Internal Pulldown resistor; IPU = Internal Pullup resistor; CP[*n*] = configurable pull-up/pull-down (where *n* is the pin group) using the PUPDENA and PUPDSEL registers in the System Module. The pull-up and pull-down control of these pins is not active until the device is out of reset. During reset, all of the pins associated with these registers are pulled down. If the application requires a pull-up, an external pull-up can be used. For electrical specifications on the pull-up and and internal pull-down circuits, see the Device Operating Conditions section.

(3) This signal is part of a dual-voltage IO group (A, B or C). These groups can be operated at 3.3V or 1.8V nominal. The three groups can be operated at independent voltages but all pins withina group will operate at the same voltage. Group A operates at the voltage of power supply DVDD3318_A. Group B operates at the voltage of power supply DVDD3318_B. Group C operates at the voltage of power supply DVDD3318_C.

2.9.17 Universal Serial Bus Modules (USB0, USB1)

Table 2-21. Universal Serial Bus (USB) Terminal Functions

SIGNAL		TYPE(1)	PULL(2)	POWER GROUP(3)	DESCRIPTION
NAME	NO.				
USB0 2.0 OTG (USB0)					
USB0_DM	M18	A	IPD	—	USB0 PHY data minus
USB0_DP	M19	A	IPD	—	USB0 PHY data plus
USB0_VDDA33	N18	PWR	—	—	USB0 PHY 3.3-V supply
USB0_ID	P16	A	—	—	USB0 PHY identification (mini-A or mini-B plug)
USB0_VBUS	N19	A	—	—	USB0 bus voltage
USB0_DRVVBUS	K18	0	IPD	B	USB0 controller VBUS control output.
AHCLKX / **USB_REFCLKIN** / $\overline{\text{UART1_CTS}}$ / GP0[10] / PRU0_R31[17]	A3	I	CP[0]	A	USB_REFCLKIN. Optional clock input
USB0_VDDA18	N14	PWR	—	—	USB0 PHY 1.8-V supply input
USB0_VDDA12	N17	A	—	—	USB0 PHY 1.2-V LDO output for bypass cap
USB_CVDD	M12	PWR	—	—	USB0 and USB1 core logic 1.2-V supply input
USB1 1.1 OHCI (USB1)					
USB1_DM	P18	A	—	—	USB1 PHY data minus
USB1_DP	P19	A	—	—	USB1 PHY data plus
AHCLKX / **USB_REFCLKIN** / $\overline{\text{UART1_CTS}}$ / GP0[10] / PRU0_R31[17]	A3	I	CP[0]	A	USB_REFCLKIN. Optional clock input
USB1_VDDA33	P15	PWR	—	—	USB1 PHY 3.3-V supply
USB1_VDDA18	P14	PWR	—	—	USB1 PHY 1.8-V supply
USB_CVDD	M12	PWR	—	—	USB0 and USB1 core logic 1.2-V supply input

(1) I = Input, O = Output, I/O = Bidirectional, Z = High impedance, PWR = Supply voltage, GND = Ground, A = Analog signal.
Note: The pin type shown refers to the input, output or high-impedance state of the pin function when configured as the signal name highlighted in bold. All multiplexed signals may enter a high-impedance state when the configured function is input-only or the configured function supports high-Z operation. All GPIO signals can be used as input or output. For multiplexed pins where functions have different types (ie., input versus output), the table reflects the pin function direction for that particular peripheral.

(2) IPD = Internal Pulldown resistor; IPU = Internal Pullup resistor; CP[*n*] = configurable pull-up/pull-down (where *n* is the pin group) using the PUPDENA and PUPDSEL registers in the System Module. The pull-up and pull-down control of these pins is not active until the device is out of reset. During reset, all of the pins associated with these registers are pulled down. If the application requires a pull-up, an external pull-up can be used. For electrical specifications on the pull-up and and internal pull-down circuits, see the Device Operating Conditions section.

(3) This signal is part of a dual-voltage IO group (A, B or C). These groups can be operated at 3.3V or 1.8V nominal. The three groups can be operated at independent voltages but all pins withina group will operate at the same voltage. Group A operates at the voltage of power supply DVDD3318_A. Group B operates at the voltage of power supply DVDD3318_B. Group C operates at the voltage of power supply DVDD3318_C.

Copyright © 2011–2013, Texas Instruments Incorporated

2.9.18 Ethernet Media Access Controller (EMAC)

Table 2-22. Ethernet Media Access Controller (EMAC) Terminal Functions

SIGNAL NAME	SIGNAL NO.	TYPE(1)	PULL(2)	POWER GROUP(3)	DESCRIPTION
MII					
AXR6 / CLKR0 / GP1[14] / **MII_TXEN** / PRU0_R31[6]	C1	O	CP[5]	A	EMAC MII Transmit enable output
AXR5 / CLKX0 / GP1[13] / **MII_TXCLK**	D3	I	CP[5]	A	EMAC MII Transmit clock input
AXR4 / FSR0 / GP1[12] / **MII_COL**	D1	I	CP[5]	A	EMAC MII Collision detect input
AXR3 / FSX0 / GP1[11] / **MII_TXD[3]**	E3	O	CP[5]	A	EMAC MII transmit data
AXR2 / DR0 / GP1[10] / **MII_TXD[2]**	E2	O	CP[5]	A	
AXR1 / DX0 / GP1[9] / **MII_TXD[1]**	E1	O	CP[5]	A	
AXR0 / ECAP0_APWM0 / GP8[7] / **MII_TXD[0]** / CLKS0	F3	O	CP[6]	A	
SPI0_SOMI / EPWMSYNCI / GP8[6] / **MII_RXER**	C16	I	CP[7]	A	EMAC MII receive error input
SPI0_SIMO /EPWMSYNCO / GP8[5] / **MII_CRS**	C18	I	CP[7]	A	EMAC MII carrier sense input
SPI0_CLK / EPWM0A / GP1[8] / **MII_RXCLK**	D19	I	CP[7]	A	EMAC MII receive clock input
$\overline{\text{SPI0_ENA}}$ / EPWM0B / PRU0_R30[6] / **MII_RXDV**	C17	I	CP[7]	A	EMAC MII receive data valid input
$\overline{\text{SPI0_SCS[5]}}$ /UART0_RXD / GP8[4] / **MII_RXD[3]**	C19	I	CP[8]	A	EMAC MII receive data
$\overline{\text{SPI0_SCS[4]}}$ /UART0_TXD / GP8[3] / **MII_RXD[2]**	D18	I	CP[8]	A	
$\overline{\text{SPI0_SCS[3]}}$ / $\overline{\text{UART0_CTS}}$ / GP8[2] / **MII_RXD[1]** / SATA_MP_SWITCH	E17	I	CP[9]	A	
$\overline{\text{SPI0_SCS[2]}}$ / $\overline{\text{UART0_RTS}}$ / GP8[1] / **MII_RXD[0]** / SATA_CP_DET	D16	I	CP[9]	A	

(1) I = Input, O = Output, I/O = Bidirectional, Z = High impedance, PWR = Supply voltage, GND = Ground, A = Analog signal.
Note: The pin type shown refers to the input, output or high-impedance state of the pin function when configured as the signal name highlighted in bold. All multiplexed signals may enter a high-impedance state when the configured function is input-only or the configured function supports high-Z operation. All GPIO signals can be used as input or output. For multiplexed pins where functions have different types (ie., input versus output), the table reflects the pin function direction for that particular peripheral.

(2) IPD = Internal Pulldown resistor; IPU = Internal Pullup resistor; CP[*n*] = configurable pull-up/pull-down (where *n* is the pin group) using the PUPDENA and PUPDSEL registers in the System Module. The pull-up and pull-down control of these pins is not active until the device is out of reset. During reset, all of the pins associated with these registers are pulled down. If the application requires a pull-up, an external pull-up can be used. For electrical specifications on the pull-up and and internal pull-down circuits, see the Device Operating Conditions section.

(3) This signal is part of a dual-voltage IO group (A, B or C). These groups can be operated at 3.3V or 1.8V nominal. The three groups can be operated at independent voltages but all pins withina group will operate at the same voltage. Group A operates at the voltage of power supply DVDD3318_A. Group B operates at the voltage of power supply DVDD3318_B. Group C operates at the voltage of power supply DVDD3318_C.

Table 2-22. Ethernet Media Access Controller (EMAC) Terminal Functions (continued)

SIGNAL NAME	SIGNAL NO.	TYPE(1)	PULL(2)	POWER GROUP(3)	DESCRIPTION
RMII					
VP_DIN[1] / UHPI_HD[9] / UPP_D[9] / **RMII_MHZ_50_CLK** / PRU0_R31[23]	W18	I/O	CP[26]	C	EMAC 50-MHz clock input or output
VP_DIN[2] / UHPI_HD[10] / UPP_D[10] / **RMII_RXER** / PRU0_R31[24]	W17	I	CP[26]	C	EMAC RMII receiver error
VP_DIN[3] / UHPI_HD[11] / UPP_D[11] / **RMII_RXD[0]** / PRU0_R31[25]	V17	I	CP[26]	C	EMAC RMII receive data
VP_DIN[4] / UHPI_HD[12] / UPP_D[12] / **RMII_RXD[1]** /PRU0_R31[26]	W16	I	CP[26]	C	
VP_DIN[0] / UHPI_HD[8] / UPP_D[8] / **RMII_CRS_DV/** PRU1_R31[29]	W19	I	CP[26]	C	EMAC RMII carrier sense data valid
VP_DIN[5] / UHPI_HD[13] / UPP_D[13] / **RMII_TXEN** /PRU0_R31[27]	R14	O	CP[26]	C	EMAC RMII transmit enable
VP_DIN[6] / UHPI_HD[14] / UPP_D[14] / **RMII_TXD[0]** / PRU0_R31[28]	V16	O	CP[26]	C	EMAC RMII transmit data
VP_DIN[7] / UHPI_HD[15] / UPP_D[15] / **RMII_TXD[1]** / PRU0_R31[29]	U18	O	CP[26]	C	
MDIO					
$\overline{\text{SPI0_SCS[0]}}$ /TM64P1_OUT12 / GP1[6] / **MDIO_D** / TM64P1_IN12	D17	I/O	CP[10]	A	MDIO serial data
$\overline{\text{SPI0_SCS[1]}}$ /TM64P0_OUT12 / GP1[7] / **MDIO_CLK** / TM64P0_IN12	E16	O	CP[10]	A	MDIO clock

Copyright © 2011–2013, Texas Instruments Incorporated

2.9.19 Multimedia Card/Secure Digital (MMC/SD)

Table 2-23. Multimedia Card/Secure Digital (MMC/SD) Terminal Functions

SIGNAL NAME	SIGNAL NO.	TYPE(1)	PULL(2)	POWER GROUP(3)	DESCRIPTION
MMCSD0					
MMCSD0_CLK / PRU1_R30[31] /GP4[7]	E9	O	CP[18]	B	MMCSD0 Clock
EMA_A[22] / **MMCSD0_CMD** / PRU1_R30[30] / GP4[6]	A10	I/O	CP[18]	B	MMCSD0 Command
EMA_A[14] / **MMCSD0_DAT[7]** / PRU1_R30[22] / GP5[14] / PRU1_R31[22]	A12	I/O	CP[19]	B	MMC/SD0 data
EMA_A[15] / **MMCSD0_DAT[6]** / PRU1_R30[23] / GP5[15] / PRU1_R31[23]	C11	I/O	CP[19]	B	
EMA_A[16] / **MMCSD0_DAT[5]** / PRU1_R30[24] / GP4[0]	E12	I/O	CP[18]	B	
EMA_A[17] / **MMCSD0_DAT[4]** / PRU1_R30[25] / GP4[1]	B11	I/O	CP[18]	B	
EMA_A[18] / **MMCSD0_DAT[3]** / PRU1_R30[26] / GP4[2]	E11	I/O	CP[18]	B	
EMA_A[19] / **MMCSD0_DAT[2]** / PRU1_R30[27] / GP4[3]	C10	I/O	CP[18]	B	
EMA_A[20] / **MMCSD0_DAT[1]** / PRU1_R30[28] / GP4[4]	A11	I/O	CP[18]	B	
EMA_A[21] / **MMCSD0_DAT[0]** / PRU1_R30[29] / GP4[5]	B10	I/O	CP[18]	B	
MMCSD1					
PRU0_R30[24] /**MMCSD1_CLK** / UPP_CHB_START / GP8[14]/PRU1_R31[26]/	G2	O	CP[30]	C	MMCSD1 Clock
PRU0_R30[23] /**MMCSD1_CMD** / UPP_CHB_ENABLE / GP8[13]/PRU1_R31[25]	J4	I/O	CP[30]	C	MMCSD1 Command
MMCSD1_DAT[7] / LCD_PCLK / PRU1_R30[7] / GP8[11]	F1	I/O	CP[31]	C	MMC/SD1 data
MMCSD1_DAT[6] / LCD_MCLK /PRU1_R30[6] / GP8[10] / PRU1_R31[7]	F2	I/O	CP[31]	C	
MMCSD1_DAT[5] / LCD_HSYNC /PRU1_R30[5] / GP8[9] / PRU1_R31[6]	H4	I/O	CP[31]	C	
MMCSD1_DAT[4] / LCD_VSYNC /PRU1_R30[4] / GP8[8] / PRU1_R31[5]	G4	I/O	CP[31]	C	
VP_CLKIN2 / **MMCSD1_DAT[3]** / PRU1_R30[3] / GP6[4] / PRU1_R31[4]	H3	I/O	CP[30]	C	
VP_CLKOUT2 / **MMCSD1_DAT[2]** / PRU1_R30[2] / GP6[3] / PRU1_R31[3]	K3	I/O	CP[30]	C	
VP_CLKIN3 / **MMCSD1_DAT[1]**/ PRU1_R30[1] / GP6[2] / PRU1_R31[2]	J3	I/O	CP[30]	C	
PRU0_R30[25] / **MMCSD1_DAT[0]** / UPP_CHB_CLOCK / GP8[15]/ PRU1_R31[27]	G1	I/O	CP[30]	C	

(1) I = Input, O = Output, I/O = Bidirectional, Z = High impedance, PWR = Supply voltage, GND = Ground, A = Analog signal.
Note: The pin type shown refers to the input, output or high-impedance state of the pin function when configured as the signal name highlighted in bold. All multiplexed signals may enter a high-impedance state when the configured function is input-only or the configured function supports high-Z operation. All GPIO signals can be used as input or output. For multiplexed pins where functions have different types (ie., input versus output), the table reflects the pin function direction for that particular peripheral.

(2) IPD = Internal Pulldown resistor; IPU = Internal Pullup resistor; CP[*n*] = configurable pull-up/pull-down (where *n* is the pin group) using the PUPDENA and PUPDSEL registers in the System Module. The pull-up and pull-down control of these pins is not active until the device is out of reset. During reset, all of the pins associated with these registers are pulled down. If the application requires a pull-up, an external pull-up can be used. For electrical specifications on the pull-up and and internal pull-down circuits, see the Device Operating Conditions section.

(3) This signal is part of a dual-voltage IO group (A, B or C). These groups can be operated at 3.3V or 1.8V nominal. The three groups can be operated at independent voltages but all pins withina group will operate at the same voltage. Group A operates at the voltage of power supply DVDD3318_A. Group B operates at the voltage of power supply DVDD3318_B. Group C operates at the voltage of power supply DVDD3318_C.

Copyright © 2011–2013, Texas Instruments Incorporated

2.9.20 Liquid Crystal Display Controller(LCD)

Table 2-24. Liquid Crystal Display Controller (LCD) Terminal Functions

SIGNAL		TYPE(1)	PULL(2)	POWER GROUP(3)	DESCRIPTION
NAME	NO.				
VP_DOUT[15] / **LCD_D[15]** / UPP_XD[7] / GP7[7] / BOOT[7]	P4	I/O	CP[29]	C	LCD data bus
VP_DOUT[14] / **LCD_D[14]** / UPP_XD[6] / GP7[6] / BOOT[6]	R3	I/O	CP[29]	C	
VP_DOUT[13] / **LCD_D[13]** / UPP_XD[5] / GP7[5] / BOOT[5]	R2	I/O	CP[29]	C	
VP_DOUT[12] / **LCD_D[12]** / UPP_XD[4] / GP7[4] / BOOT[4]	R1	I/O	CP[29]	C	
VP_DOUT[11] / **LCD_D[11]** / UPP_XD[3] / GP7[3] / BOOT[3]	T3	I/O	CP[29]	C	
VP_DOUT[10] / **LCD_D[10]** / UPP_XD[2] / GP7[2] / BOOT[2]	T2	I/O	CP[29]	C	
VP_DOUT[9] / **LCD_D[9]** / UPP_XD[1] / GP7[1] / BOOT[1]	T1	I/O	CP[29]	C	
VP_DOUT[8] / **LCD_D[8]** / UPP_XD[0] / GP7[0] / BOOT[0]	U3	I/O	CP[29]	C	
VP_DOUT[7] / **LCD_D[7]** / UPP_XD[15] / GP7[15] / PRU1_R31[15]	U2	I/O	CP[28]	C	
VP_DOUT[6] / **LCD_D[6]** / UPP_XD[14] / GP7[14] / PRU1_R31[14]	U1	I/O	CP[28]	C	
VP_DOUT[5] / **LCD_D[5]** / UPP_XD[13] / GP7[13] / PRU1_R31[13]	V3	I/O	CP[28]	C	
VP_DOUT[4] / **LCD_D[4]** / UPP_XD[12] / GP7[12] / PRU1_R31[12]	V2	I/O	CP[28]	C	
VP_DOUT[3] / **LCD_D[3]** / UPP_XD[11] / GP7[11] / PRU1_R31[11]	V1	I/O	CP[28]	C	
VP_DOUT[2] / **LCD_D[2]** / UPP_XD[10] / GP7[10] / PRU1_R31[10]	W3	I/O	CP[28]	C	
VP_DOUT[1] / **LCD_D[1]** / UPP_XD[9] / GP7[9] / PRU1_R31[9]	W2	I/O	CP[28]	C	
VP_DOUT[0] / **LCD_D[0]** / UPP_XD[8] / GP7[8] / PRU1_R31[8]	W1	I/O	CP[28]	C	
MMCSD1_DAT[7] / **LCD_PCLK** / PRU1_R30[7] / GP8[11]	F1	O	CP[31]	C	LCD pixel clock
MMCSD1_DAT[5] / **LCD_HSYNC** / PRU1_R30[5] / GP8[9] / PRU1_R31[6]	H4	O	CP[31]	C	LCD horizontal sync
MMCSD1_DAT[4] / **LCD_VSYNC** / PRU1_R30[4] / GP8[8] / PRU1_R31[5]	G4	O	CP[31]	C	LCD vertical sync
$\overline{\text{LCD_AC_ENB_CS}}$ / GP6[0]/ / PRU1_R31[28]	R5	O	CP[31]	C	LCD AC bias enable chip select
MMCSD1_DAT[6] / **LCD_MCLK** / PRU1_R30[6] / GP8[10] / PRU1_R31[7]	F2	O	CP[31]	C	LCD memory clock

(1) I = Input, O = Output, I/O = Bidirectional, Z = High impedance, PWR = Supply voltage, GND = Ground, A = Analog signal.
Note: The pin type shown refers to the input, output or high-impedance state of the pin function when configured as the signal name highlighted in bold. All multiplexed signals may enter a high-impedance state when the configured function is input-only or the configured function supports high-Z operation. All GPIO signals can be used as input or output. For multiplexed pins where functions have different types (ie., input versus output), the table reflects the pin function direction for that particular peripheral.

(2) IPD = Internal Pulldown resistor; IPU = Internal Pullup resistor; CP[*n*] = configurable pull-up/pull-down (where *n* is the pin group) using the PUPDENA and PUPDSEL registers in the System Module. The pull-up and pull-down control of these pins is not active until the device is out of reset. During reset, all of the pins associated with these registers are pulled down. If the application requires a pull-up, an external pull-up can be used. For electrical specifications on the pull-up and and internal pull-down circuits, see the Device Operating Conditions section.

(3) This signal is part of a dual-voltage IO group (A, B or C). These groups can be operated at 3.3V or 1.8V nominal. The three groups can be operated at independent voltages but all pins withina group will operate at the same voltage. Group A operates at the voltage of power supply DVDD3318_A. Group B operates at the voltage of power supply DVDD3318_B. Group C operates at the voltage of power supply DVDD3318_C.

Copyright © 2011–2013, Texas Instruments Incorporated

2.9.21 Serial ATA Controller (SATA)

Table 2-25. Serial ATA Controller (SATA) Terminal Functions

SIGNAL		TYPE(1)	PULL(2)	POWER GROUP(3)	DESCRIPTION
NAME	NO.				
SATA_RXP	L1	I	—	—	SATA receive data (positive)
$\overline{\text{SATA_RXN}}$	L2	I	—	—	SATA receive data (negative)
SATA_TXP	J1	O	—	—	SATA transmit data (positive)
$\overline{\text{SATA_TXN}}$	J2	O	—	—	SATA transmit data (negative)
SATA_REFCLKP	N2	I	—	—	SATA PHY reference clock (positive)
$\overline{\text{SATA_REFCLKN}}$	N1	I	—	—	SATA PHY reference clock (negative)
$\overline{\text{SPI0_SCS[3]}}$ / $\overline{\text{UART0_CTS}}$ / GP8[2] / MII_RXD[1] / **SATA_MP_SWITCH**	E17	I	CP[9]	A	SATA mechanical presence switch input
$\overline{\text{SPI0_SCS[2]}}$ / $\overline{\text{UART0_RTS}}$ / GP8[1] / MII_RXD[0] / **SATA_CP_DET**	D16	I	CP[9]	A	SATA cold presence detect input
$\overline{\text{SPI1_SCS[2]}}$ / UART1_TXD / **SATA_CP_POD** / GP1[0]	F19	O	CP[13]	A	SATA cold presence power-on output
$\overline{\text{SPI1_SCS[3]}}$ / UART1_RXD / **SATA_LED** / GP1[1]	E18	O	CP[13]	A	SATA LED control output
SATA_REG	N3	A	—	—	SATA PHY PLL regulator output. Requires an external 0.1uF filter capacitor.
SATA_VDDR	P3	PWR	—	—	SATA PHY 1.8V internal regulator supply
SATA_VDD	M2, P1, P2, N4	PWR	—	—	SATA PHY 1.2V logic supply
SATA_VSS	H1, H2, K1, K2, L3, M1	GND	—	—	SATA PHY ground reference

(1) I = Input, O = Output, I/O = Bidirectional, Z = High impedance, PWR = Supply voltage, GND = Ground, A = Analog signal.
Note: The pin type shown refers to the input, output or high-impedance state of the pin function when configured as the signal name highlighted in bold. All multiplexed signals may enter a high-impedance state when the configured function is input-only or the configured function supports high-Z operation. All GPIO signals can be used as input or output. For multiplexed pins where functions have different types (ie., input versus output), the table reflects the pin function direction for that particular peripheral.

(2) IPD = Internal Pulldown resistor; IPU = Internal Pullup resistor; CP[*n*] = configurable pull-up/pull-down (where *n* is the pin group) using the PUPDENA and PUPDSEL registers in the System Module. The pull-up and pull-down control of these pins is not active until the device is out of reset. During reset, all of the pins associated with these registers are pulled down. If the application requires a pull-up, an external pull-up can be used. For electrical specifications on the pull-up and and internal pull-down circuits, see the Device Operating Conditions section.

(3) This signal is part of a dual-voltage IO group (A, B or C). These groups can be operated at 3.3V or 1.8V nominal. The three groups can be operated at independent voltages but all pins withina group will operate at the same voltage. Group A operates at the voltage of power supply DVDD3318_A. Group B operates at the voltage of power supply DVDD3318_B. Group C operates at the voltage of power supply DVDD3318_C.

Copyright © 2011–2013, Texas Instruments Incorporated

2.9.22 Universal Host-Port Interface (UHPI)

Table 2-26. Universal Host-Port Interface (UHPI) Terminal Functions

SIGNAL NAME	SIGNAL NO.	TYPE (1)	PULL (2)	POWER GROUP (3)	DESCRIPTION
VP_DIN[7] / **UHPI_HD[15]** / UPP_D[15] / RMII_TXD[1] / PRU0_R31[29]	U18	I/O	CP[26]	C	UHPI data bus
VP_DIN[6] / **UHPI_HD[14]** / UPP_D[14] / RMII_TXD[0] / PRU0_R31[28]	V16	I/O	CP[26]	C	
VP_DIN[5] / **UHPI_HD[13]** / UPP_D[13] / RMII_TXEN / PRU0_R31[27]	R14	I/O	CP[26]	C	
VP_DIN[4] / **UHPI_HD[12]** / UPP_D[12] / RMII_RXD[1] / PRU0_R31[26]	W16	I/O	CP[26]	C	
VP_DIN[3] / **UHPI_HD[11]** / UPP_D[11] / RMII_RXD[0] / PRU0_R31[25]	V17	I/O	CP[26]	C	
VP_DIN[2] / **UHPI_HD[10]** / UPP_D[10] / RMII_RXER / PRU0_R31[24]	W17	I/O	CP[26]	C	
VP_DIN[1] / **UHPI_HD[9]** / UPP_D[9] / RMII_MHZ_50_CLK / PRU0_R31[23]	W18	I/O	CP[26]	C	
VP_DIN[0] / **UHPI_HD[8]** / UPP_D[8] / RMII_CRS_DV / PRU1_R31[29]	W19	I/O	CP[26]	C	
VP_DIN[15]_VSYNC / **UHPI_HD[7]** / UPP_D[7]/PRU0_R30[15] / PRU0_R31[15]	V18	I/O	CP[27]	C	
VP_DIN[14]_HSYNC / **UHPI_HD[6]** / UPP_D[6]/ PRU0_R30[14] / PRU0_R31[14]	V19	I/O	CP[27]	C	
VP_DIN[13]_FIELD / **UHPI_HD[5]** / UPP_D[5] / PRU0_R30[13] / PRU0_R31[13]	U19	I/O	CP[27]	C	
VP_DIN[12] / **UHPI_HD[4]** / UPP_D[4] / PRU0_R30[12] / PRU0_R31[12]	T16	I/O	CP[27]	C	
VP_DIN[11] / **UHPI_HD[3]** / UPP_D[3] / PRU0_R30[11] / PRU0_R31[11]	R18	I/O	CP[27]	C	
VP_DIN[10] / **UHPI_HD[2]** / UPP_D[2] / PRU0_R30[10] / PRU0_R31[10]	R19	I/O	CP[27]	C	
VP_DIN[9] / **UHPI_HD[1]** / UPP_D[1] / PRU0_R30[9] / PRU0_R31[9]	R15	I/O	CP[27]	C	
VP_DIN[8] / **UHPI_HD[0]** / UPP_D[0] / GP6[5] / PRU1_R31[0]	P17	I/O	CP[27]	C	
PRU0_R30[29] / **UHPI_HCNTL0** / UPP_CHA_CLOCK / GP6[11]	U17	I	CP[24]	C	UHPI access control
PRU0_R30[28] / **UHPI_HCNTL1** / UPP_CHA_START / GP6[10]	W15	I	CP[24]	C	
PRU0_R30[27] / **UHPI_HHWIL** / UPP_CHA_ENABLE / GP6[9]	U16	I	CP[24]	C	UHPI half-word identification control
PRU0_R30[26] **/UHPI_HR$\overline{\text{W}}$** / UPP_CHA_WAIT / GP6[8]/PRU1_R31[17]	T15	I	CP[24]	C	UHPI read/write
VP_CLKIN0 / **$\overline{\text{UHPI_HCS}}$** / PRU1_R30[10] / GP6[7] / UPP_2xTXCLK	W14	I	CP[25]	C	UHPI chip select
VP_CLKIN1 / **$\overline{\text{UHPI_HDS1}}$** / PRU1_R30[9] / GP6[6] / PRU1_R31[16]	V15	I	CP[25]	C	UHPI data strobe
CLKOUT / **$\overline{\text{UHPI_HDS2}}$** / PRU1_R30[13] / GP6[14]	T18	I	CP[22]	C	
PRU0_R30[30] / **$\overline{\text{UHPI_HINT}}$** / PRU1_R30[11] / GP6[12]	R16	O	CP[23]	C	UHPI host interrupt

(1) I = Input, O = Output, I/O = Bidirectional, Z = High impedance, PWR = Supply voltage, GND = Ground, A = Analog signal.
Note: The pin type shown refers to the input, output or high-impedance state of the pin function when configured as the signal name highlighted in bold. All multiplexed signals may enter a high-impedance state when the configured function is input-only or the configured function supports high-Z operation. All GPIO signals can be used as input or output. For multiplexed pins where functions have different types (ie., input versus output), the table reflects the pin function direction for that particular peripheral.

(2) IPD = Internal Pulldown resistor; IPU = Internal Pullup resistor; CP[*n*] = configurable pull-up/pull-down (where *n* is the pin group) using the PUPDENA and PUPDSEL registers in the System Module. The pull-up and pull-down control of these pins is not active until the device is out of reset. During reset, all of the pins associated with these registers are weakly pulled down. If the application requires a pull-up, an external pull-up can be used. For electrical specifications on the pull-up and and internal pull-down circuits, see the Device Operating Conditions section.

(3) This signal is part of a dual-voltage IO group (A, B or C). These groups can be operated at 3.3V or 1.8V nominal. The three groups can be operated at independent voltages but all pins withina group will operate at the same voltage. Group A operates at the voltage of power supply DVDD3318_A. Group B operates at the voltage of power supply DVDD3318_B. Group C operates at the voltage of power supply DVDD3318_C.

Copyright © 2011–2013, Texas Instruments Incorporated

Table 2-26. Universal Host-Port Interface (UHPI) Terminal Functions (continued)

SIGNAL		TYPE (1)	PULL (2)	POWER GROUP (3)	DESCRIPTION
NAME	NO.				
PRU0_R30[31] / **UHPI_HRDY** / PRU1_R30[12] /GP6[13]	R17	O	CP[23]	C	UHPI ready
RESETOUT / **UHPI_HAS** / PRU1_R30[14] / GP6[15]	T17	I	CP[21]	C	UHPI address strobe

2.9.23 Universal Parallel Port (uPP)

Table 2-27. Universal Parallel Port (uPP) Terminal Functions

SIGNAL		TYPE (1)	PULL (2)	POWER GROUP (3)	DESCRIPTION
NAME	NO.				
VP_CLKIN0 / $\overline{\text{UHPI_HCS1}}$ /PRU1_R30[10] / GP6[7] / **UPP_2xTXCLK**	W14	I	CP[25]	C	uPP 2x transmit clock input
PRU0_R30[25] /MMCSD1_DAT[0] / **UPP_CHB_CLOCK** / GP8[15]/PRU1_R31[27]	G1	I/O	CP[30]	C	uPP channel B clock
PRU0_R30[24]/ MMCSD1_CLK / **UPP_CHB_START** / GP8[14] / PRU1_R31[26]	G2	I/O	CP[30]	C	uPP channel B start
PRU0_R30[23] / MMCSD1_CMD / **UPP_CHB_ENABLE** / GP8[13]/PRU1_R31[25]	J4	I/O	CP[30]	C	uPP channel B enable
PRU0_R30[22] / PRU1_R30[8] / **UPP_CHB_WAIT** / GP8[12]/ PRU1_R31[24]	G3	I/O	CP[30]	C	uPP channel B wait
PRU0_R30[29] /UHPI_CNTL0 / **UPP_CHA_CLOCK** / GP6[11]	U17	I/O	CP[24]	C	uPP channel A clock
PRU0_R30[28] / UHPI_HCNTL1 / **UPP_CHA_START** / GP6[10]	W15	I/O	CP[24]	C	uPP channel A start
PRU0_R30[27] / UHPI_HHWIL / **UPP_CHA_ENABLE** / GP6[9]	U16	I/O	CP[24]	C	uPP channel A enable
PRU0_R30[26] /UHPI_HR$\overline{\text{W}}$ / **UPP_CHA_WAIT** / GP6[8] / PRU1_R31[17]	T15	I/O	CP[24]	C	uPP channel A wait

(1) I = Input, O = Output, I/O = Bidirectional, Z = High impedance, PWR = Supply voltage, GND = Ground, A = Analog signal.
Note: The pin type shown refers to the input, output or high-impedance state of the pin function when configured as the signal name highlighted in bold. All multiplexed signals may enter a high-impedance state when the configured function is input-only or the configured function supports high-Z operation. All GPIO signals can be used as input or output. For multiplexed pins where functions have different types (ie., input versus output), the table reflects the pin function direction for that particular peripheral.

(2) IPD = Internal Pulldown resistor; IPU = Internal Pullup resistor; CP[*n*] = configurable pull-up/pull-down (where *n* is the pin group) using the PUPDENA and PUPDSEL registers in the System Module. The pull-up and pull-down control of these pins is not active until the device is out of reset. During reset, all of the pins associated with these registers are pulled down. If the application requires a pull-up, an external pull-up can be used. For electrical specifications on the pull-up and and internal pull-down circuits, see the Device Operating Conditions section.

(3) This signal is part of a dual-voltage IO group (A, B or C). These groups can be operated at 3.3V or 1.8V nominal. The three groups can be operated at independent voltages but all pins withina group will operate at the same voltage. Group A operates at the voltage of power supply DVDD3318_A. Group B operates at the voltage of power supply DVDD3318_B. Group C operates at the voltage of power supply DVDD3318_C.

Copyright © 2011–2013, Texas Instruments Incorporated

Table 2-27. Universal Parallel Port (uPP) Terminal Functions (continued)

SIGNAL NAME	SIGNAL NO.	TYPE(1)	PULL(2)	POWER GROUP(3)	DESCRIPTION
VP_DOUT[7] / LCD_D[7] / **UPP_XD[15]** / GP7[15] / PRU1_R31[15]	U2	I/O	CP[28]	C	uPP data bus
VP_DOUT[6] / LCD_D[6] / **UPP_XD[14]** / GP7[14] / PRU1_R31[14]	U1	I/O	CP[28]	C	
VP_DOUT[5] / LCD_D[5] / **UPP_XD[13]** / GP7[13] / PRU1_R31[13]	V3	I/O	CP[28]	C	
VP_DOUT[4] / LCD_D[4] / **UPP_XD[12]** / GP7[12] / PRU1_R31[12]	V2	I/O	CP[28]	C	
VP_DOUT[3] / LCD_D[3] / **UPP_XD[11]** / GP7[11] / PRU1_R31[11]	V1	I/O	CP[28]	C	
VP_DOUT[2] / LCD_D[2] / **UPP_XD[10]** / GP7[10] / PRU1_R31[10]	W3	I/O	CP[28]	C	
VP_DOUT[1] / LCD_D[1] / **UPP_XD[9]** / GP7[9] / PRU1_R31[9]	W2	I/O	CP[28]	C	
VP_DOUT[0] / LCD_D[0] / **UPP_XD[8]** / GP7[8] / PRU1_R31[8]	W1	I/O	CP[28]	C	
VP_DOUT[15] / LCD_D[15] / **UPP_XD[7]** / GP7[7] / BOOT[7]	P4	I/O	CP[29]	C	
VP_DOUT[14] / LCD_D[14] / **UPP_XD[6]** / GP7[6] / BOOT[6]	R3	I/O	CP[29]	C	
VP_DOUT[13] / LCD_D[13] / **UPP_XD[5]** / GP7[5] / BOOT[5]	R2	I/O	CP[29]	C	
VP_DOUT[12] / LCD_D[12] / **UPP_XD[4]** / GP7[4] / BOOT[4]	R1	I/O	CP[29]	C	
VP_DOUT[11] / LCD_D[11] / **UPP_XD[3]** / GP7[3] / BOOT[3]	T3	I/O	CP[29]	C	
VP_DOUT[10] / LCD_D[10] / **UPP_XD[2]** / GP7[2] / BOOT[2]	T2	I/O	CP[29]	C	
VP_DOUT[9] / LCD_D[9] / **UPP_XD[1]** / GP7[1] / BOOT[1]	T1	I/O	CP[29]	C	
VP_DOUT[8] / LCD_D[8] / **UPP_XD[0]** / GP7[0] / BOOT[0]	U3	I/O	CP[29]	C	
VP_DIN[7] / UHPI_HD[15] / **UPP_D[15]** / RMII_TXD[1] / PRU0_R31[29]	U18	I/O	CP[26]	C	
VP_DIN[6] / UHPI_HD[14] / **UPP_D[14]** / RMII_TXD[0] / PRU0_R31[28]	V16	I/O	CP[26]	C	
VP_DIN[5] / UHPI_HD[13] / **UPP_D[13]** / RMII_TXEN / PRU0_R31[27]	R14	I/O	CP[26]	C	
VP_DIN[4] / UHPI_HD[12] / **UPP_D[12]** / RMII_RXD[1] / PRU0_R31[26]	W16	I/O	CP[26]	C	
VP_DIN[3] / UHPI_HD[11] / **UPP_D[11]** / RMII_RXD[0] / PRU0_R31[25]	V17	I/O	CP[26]	C	
VP_DIN[2] / UHPI_HD[10] / **UPP_D[10]** / RMII_RXER / PRU0_R31[24]	W17	I/O	CP[26]	C	
VP_DIN[1] / UHPI_HD[9] / **UPP_D[9]** / RMII_MHZ_50_CLK / PRU0_R31[23]	W18	I/O	CP[26]	C	
VP_DIN[0] / UHPI_HD[8] / **UPP_D[8]** / RMII_CRS_DV / PRU1_R31[29]	W19	I/O	CP[26]	C	
VP_DIN[15]_VSYNC / UHPI_HD[7] / **UPP_D[7]**/PRU0_R30[15] / PRU0_R31[15]	V18	I/O	CP[27]	C	
VP_DIN[14]_HSYNC / UHPI_HD[6] / **UPP_D[6]**/ PRU0_R30[14] / PRU0_R31[14]	V19	I/O	CP[27]	C	
VP_DIN[13]_FIELD / UHPI_HD[5] / **UPP_D[5]** /PRU0_R30[13] / PRU0_R31[13]	U19	I/O	CP[27]	C	
VP_DIN[12] / UHPI_HD[4] / **UPP_D[4]**/ PRU0_R30[12] / PRU0_R31[12]	T16	I/O	CP[27]	C	
VP_DIN[11] / UHPI_HD[3] / **UPP_D[3]**/ PRU0_R30[11] / PRU0_R31[11]	R18	I/O	CP[27]	C	
VP_DIN[10] / UHPI_HD[2] / **UPP_D[2]**/ PRU0_R30[10] / PRU0_R31[10]	R19	I/O	CP[27]	C	
VP_DIN[9] / UHPI_HD[1] / **UPP_D[1]**/ PRU0_R30[9] / PRU0_R31[9]	R15	I/O	CP[27]	C	
VP_DIN[8] / UHPI_HD[0] / **UPP_D[0]** / GP6[5] / PRU1_R31[0]	P17	I/O	CP[27]	C	

Copyright © 2011–2013, Texas Instruments Incorporated

2.9.24 Video Port Interface (VPIF)

Table 2-28. Video Port Interface (VPIF) Terminal Functions

SIGNAL NAME	SIGNAL NO.	TYPE(1)	PULL(2)	POWER GROUP(3)	DESCRIPTION
VIDEO INPUT					
VP_CLKIN0 / $\overline{\text{UHPI_HCS}}$ / PRU1_R30[10] / GP6[7] / UPP_2xTXCLK	W14	I	CP[25]	C	VPIF capture channel 0 input clock
VP_CLKIN1 / $\overline{\text{UHPI_HDS1}}$/PRU1_R30[9] / GP6[6] / PRU1_R31[16]	V15	I	CP[25]	C	VPIF capture channel 1 input clock
VP_DIN[15]_VSYNC / UHPI_HD[7] / UPP_D[7] / PRU0_R30[15] / PRU0_R31[15]	V18	I	CP[27]	C	VPIF capture data bus
VP_DIN[14]_HSYNC / UHPI_HD[6] / UPP_D[6]/ PRU0_R30[14] / PRU0_R31[14]	V19	I	CP[27]	C	
VP_DIN[13]_FIELD / UHPI_HD[5] / UPP_D[5] / PRU0_R30[13] / PRU0_R31[13]	U19	I	CP[27]	C	
VP_DIN[12] / UHPI_HD[4] / UPP_D[4]/ PRU0_R30[12] / PRU0_R31[12]	T16	I	CP[27]	C	
VP_DIN[11] / UHPI_HD[3] / UPP_D[3]/ PRU0_R30[11] / PRU0_R31[11]	R18	I	CP[27]	C	
VP_DIN[10] / UHPI_HD[2] / UPP_D[2] / PRU0_R30[10] / PRU0_R31[10]	R19	I	CP[27]	C	
VP_DIN[9] / UHPI_HD[1] / UPP_D[1] / PRU0_R30[9] / PRU0_R31[9]	R15	I	CP[27]	C	
VP_DIN[8] / UHPI_HD[0] / UPP_D[0] / GP6[5] / PRU1_R31[0]	P17	I	CP[27]	C	
VP_DIN[7] / UHPI_HD[15] / UPP_D[15] / RMII_TXD[1] / PRU0_R31[29]	U18	I	CP[26]	C	
VP_DIN[6] / UHPI_HD[14] / UPP_D[14] / RMII_TXD[0] / PRU0_R31[28]	V16	I	CP[26]	C	
VP_DIN[5] / UHPI_HD[13] / UPP_D[13] / RMII_TXEN / PRU0_R31[27]	R14	I	CP[26]	C	
VP_DIN[4] / UHPI_HD[12] / UPP_D[12] / RMII_RXD[1] / PRU0_R31[26]	W16	I	CP[26]	C	
VP_DIN[3] / UHPI_HD[11] / UPP_D[11] / RMII_RXD[0] / PRU0_R31[25]	V17	I	CP[26]	C	
VP_DIN[2] / UHPI_HD[10] / UPP_D[10] / RMII_RXER / PRU0_R31[24]	W17	I	CP[26]	C	
VP_DIN[1] / UHPI_HD[9] / UPP_D[9] / RMII_MHZ_50_CLK / PRU0_R31[23]	W18	I	CP[26]	C	
VP_DIN[0] / UHPI_HD[8] / UPP_D[8] / RMII_CRS_DV / PRU1_R31[29]	W19	I	CP[26]	C	

(1) I = Input, O = Output, I/O = Bidirectional, Z = High impedance, PWR = Supply voltage, GND = Ground, A = Analog signal.
Note: The pin type shown refers to the input, output or high-impedance state of the pin function when configured as the signal name highlighted in bold. All multiplexed signals may enter a high-impedance state when the configured function is input-only or the configured function supports high-Z operation. All GPIO signals can be used as input or output. For multiplexed pins where functions have different types (ie., input versus output), the table reflects the pin function direction for that particular peripheral.

(2) IPD = Internal Pulldown resistor; IPU = Internal Pullup resistor; CP[*n*] = configurable pull-up/pull-down (where *n* is the pin group) using the PUPDENA and PUPDSEL registers in the System Module. The pull-up and pull-down control of these pins is not active until the device is out of reset. During reset, all of the pins associated with these registers are pulled down. If the application requires a pull-up, an external pull-up can be used. For electrical specifications on the pull-up and and internal pull-down circuits, see the Device Operating Conditions section.

(3) This signal is part of a dual-voltage IO group (A, B or C). These groups can be operated at 3.3V or 1.8V nominal. The three groups can be operated at independent voltages but all pins withina group will operate at the same voltage. Group A operates at the voltage of power supply DVDD3318_A. Group B operates at the voltage of power supply DVDD3318_B. Group C operates at the voltage of power supply DVDD3318_C.

Copyright © 2011–2013, Texas Instruments Incorporated

Table 2-28. Video Port Interface (VPIF) Terminal Functions (continued)

SIGNAL NAME	SIGNAL NO.	TYPE(1)	PULL(2)	POWER GROUP(3)	DESCRIPTION
VIDEO OUTPUT					
VP_CLKIN2 / MMCSD1_DAT[3] / PRU1_R30[3] / GP6[4] / PRU1_R31[4]	H3	I	CP[30]	C	VPIF display channel 2 input clock
VP_CLKOUT2 / MMCSD1_DAT[2] / PRU1_R30[2] / GP6[3] / PRU1_R31[3]	K3	O	CP[30]	C	VPIF display channel 2 output clock
VP_CLKIN3 / MMCSD1_DAT[1] / PRU1_R30[1] / GP6[2] / PRU1_R31[2]	J3	I	CP[30]	C	VPIF display channel 3 input clock
VP_CLKOUT3 / PRU1_R30[0] / GP6[1] / PRU1_R31[1]	K4	O	CP[30]	C	VPIF display channel 3 output clock
VP_DOUT[15] / LCD_D[15] /UPP_XD[7] / GP7[7] / BOOT[7]	P4	O	CP[29]	C	VPIF display data bus
VP_DOUT[14] / LCD_D[14] / UPP_XD[6] / GP7[6] / BOOT[6]	R3	O	CP[29]	C	
VP_DOUT[13] / LCD_D[13] /UPP_XD[5] / GP7[5] / BOOT[5]	R2	O	CP[29]	C	
VP_DOUT[12] / LCD_D[12] /UPP_XD[4] / GP7[4] / BOOT[4]	R1	O	CP[29]	C	
VP_DOUT[11] / LCD_D[11] /UPP_XD[3] / GP7[3] / BOOT[3]	T3	O	CP[29]	C	
VP_DOUT[10] / LCD_D[10] /UPP_XD[2] / GP7[2] / BOOT[2]	T2	O	CP[29]	C	
VP_DOUT[9] / LCD_D[9] /UPP_XD[1] / GP7[1] / BOOT[1]	T1	O	CP[29]	C	
VP_DOUT[8] / LCD_D[8] /UPP_XD[0] / GP7[0] / BOOT[0]	U3	O	CP[29]	C	
VP_DOUT[7] / LCD_D[7] /UPP_XD[15] / GP7[15] / PRU1_R31[15]	U2	O	CP[28]	C	
VP_DOUT[6] / LCD_D[6] /UPP_XD[14] / GP7[14] / PRU1_R31[14]	U1	O	CP[28]	C	
VP_DOUT[5] / LCD_D[5] /UPP_XD[13] / GP7[13] / PRU1_R31[13]	V3	O	CP[28]	C	
VP_DOUT[4] / LCD_D[4] /UPP_XD[12] / GP7[12] / PRU1_R31[12]	V2	O	CP[28]	C	
VP_DOUT[3] / LCD_D[3] /UPP_XD[11] / GP7[11] / PRU1_R31[11]	V1	O	CP[28]	C	
VP_DOUT[2] / LCD_D[2] /UPP_XD[10] / GP7[10] / PRU1_R31[10]	W3	O	CP[28]	C	
VP_DOUT[1] / LCD_D[1] /UPP_XD[9] / GP7[9] / PRU1_R31[9]	W2	O	CP[28]	C	
VP_DOUT[0] /LCD_D[0] /UPP_XD[8] / GP7[8] / PRU1_R31[8]	W1	O	CP[28]	C	

Copyright © 2011–2013, Texas Instruments Incorporated

2.9.25 General Purpose Input Output

Table 2-29. General Purpose Input Output Terminal Functions

SIGNAL		TYPE (1)	PULL (2)	POWER GROUP (3)	DESCRIPTION
NAME	NO.				
GP0					
ACLKR / PRU0_R30[20] / **GP0[15]** / PRU0_R31[22]	A1	I/O	CP[0]	A	GPIO Bank 0
ACLKX / PRU0_R30[19] / **GP0[14]** / PRU0_R31[21]	B1	I/O	CP[0]	A	
AFSR / **GP0[13]** / PRU0_R31[20]	C2	I/O	CP[0]	A	
AFSX / **GP0[12]** /PRU0_R31[19]	B2	I/O	CP[0]	A	
AHCLKR / PRU0_R30[18] / $\overline{\text{UART1_RTS}}$ / **GP0[11]** / PRU0_R31[18]	A2	I/O	CP[0]	A	
AHCLKX / USB_REFCLKIN / $\overline{\text{UART1_CTS}}$ / **GP0[10]** / PRU0_R31[17]	A3	I/O	CP[0]	A	
AMUTE / PRU0_R30[16] / $\overline{\text{UART2_RTS}}$ / **GP0[9]** / PRU0_R31[16]	D5	I/O	CP[0]	A	
RTC_ALARM / $\overline{\text{UART2_CTS}}$ / **GP0[8]** / $\overline{\text{DEEPSLEEP}}$	F4	I/O	CP[0]	A	
AXR15 / EPWM0TZ[0] / ECAP2_APWM2 / **GP0[7]**	A4	I/O	CP[1]	A	
AXR14 / CLKR1 / **GP0[6]**	B4	I/O	CP[2]	A	
AXR13 / CLKX1 / **GP0[5]**	B3	I/O	CP[2]	A	
AXR12 / FSR1 / **GP0[4]**	C4	I/O	CP[2]	A	
AXR11 / FSX1 / **GP0[3]**	C5	I/O	CP[2]	A	
AXR10 / DR1 / **GP0[2]**	D4	I/O	CP[2]	A	
AXR9 / DX1 / **GP0[1]**	C3	I/O	CP[2]	A	
AXR8 / CLKS1 / ECAP1_APWM1 / **GP0[0]** / PRU0_R31[8]	E4	I/O	CP[3]	A	

(1) I = Input, O = Output, I/O = Bidirectional, Z = High impedance, PWR = Supply voltage, GND = Ground, A = Analog signal.
Note: The pin type shown refers to the input, output or high-impedance state of the pin function when configured as the signal name highlighted in bold. All multiplexed signals may enter a high-impedance state when the configured function is input-only or the configured function supports high-Z operation. All GPIO signals can be used as input or output. For multiplexed pins where functions have different types (ie., input versus output), the table reflects the pin function direction for that particular peripheral.

(2) IPD = Internal Pulldown resistor; IPU = Internal Pullup resistor; CP[*n*] = configurable pull-up/pull-down (where *n* is the pin group) using the PUPDENA and PUPDSEL registers in the System Module. The pull-up and pull-down control of these pins is not active until the device is out of reset. During reset, all of the pins associated with these registers are pulled down. If the application requires a pull-up, an external pull-up can be used. For electrical specifications on the pull-up and and internal pull-down circuits, see the Device Operating Conditions section.

(3) This signal is part of a dual-voltage IO group (A, B or C). These groups can be operated at 3.3V or 1.8V nominal. The three groups can be operated at independent voltages but all pins withina group will operate at the same voltage. Group A operates at the voltage of power supply DVDD3318_A. Group B operates at the voltage of power supply DVDD3318_B. Group C operates at the voltage of power supply DVDD3318_C.

Copyright © 2011–2013, Texas Instruments Incorporated

Table 2-29. General Purpose Input Output Terminal Functions (continued)

SIGNAL		TYPE(1)	PULL(2)	POWER GROUP(3)	DESCRIPTION
NAME	NO.				
GP1					
AXR7 / EPWM1TZ[0] / PRU0_R30[17] / **GP1[15]** / PRU0_R31[7]	D2	I/O	CP[4]	A	GPIO Bank 1
AXR6 / CLKR0 / **GP1[14]** / MII_TXEN / PRU0_R31[6]	C1	I/O	CP[5]	A	
AXR5 / CLKX0 / **GP1[13]** / MII_TXCLK	D3	I/O	CP[5]	A	
AXR4 / FSR0 / **GP1[12]** / MII_COL	D1	I/O	CP[5]	A	
AXR3 / FSX0 / **GP1[11]** / MII_TXD[3]	E3	I/O	CP[5]	A	
AXR2 / DR0 / **GP1[10]** / MII_TXD[2]	E2	I/O	CP[5]	A	
AXR1 / DX0 / **GP1[9]** / MII_TXD[1]	E1	I/O	CP[5]	A	
SPI0_CLK / EPWM0A / **GP1[8]** / MII_RXCLK	D19	I/O	CP[7]	A	
$\overline{\text{SPI0_SCS[1]}}$ / TM64P0_OUT12 / **GP1[7]** / MDIO_CLK / TM64P0_IN12	E16	I/O	CP[10]	A	
$\overline{\text{SPI0_SCS[0]}}$ / TM64P1_OUT12 / **GP1[6]** / MDIO_D /TM64P1_IN12	D17	I/O	CP[10]	A	
$\overline{\text{SPI1_SCS[7]}}$ / I2C0_SCL / TM64P2_OUT12 / **GP1[5]**	G16	I/O	CP[11]	A	
$\overline{\text{SPI1_SCS[6]}}$ / I2C0_SDA / TM64P3_OUT12 / **GP1[4]**	G18	I/O	CP[11]	A	
$\overline{\text{SPI1_SCS[5]}}$ / UART2_RXD / I2C1_SCL / **GP1[3]**	F17	I/O	CP[12]	A	
$\overline{\text{SPI1_SCS[4]}}$ / UART2_TXD / I2C1_SDA / **GP1[2]**	F16	I/O	CP[12]	A	
$\overline{\text{SPI1_SCS[3]}}$ / UART1_RXD / SATA_LED / **GP1[1]**	E18	I/O	CP[13]	A	
$\overline{\text{SPI1_SCS[2]}}$ / UART1_TXD / SATA_CP_POD / **GP1[0]**	F19	I/O	CP[13]	A	

Copyright © 2011–2013, Texas Instruments Incorporated

Table 2-29. General Purpose Input Output Terminal Functions (continued)

SIGNAL NAME	SIGNAL NO.	TYPE(1)	PULL(2)	POWER GROUP(3)	DESCRIPTION
GP2					
$\overline{\text{SPI1_SCS[1]}}$ / EPWM1A / PRU0_R30[8] / **GP2[15]** / TM64P2_IN12	F18	I/O	CP[14]	A	GPIO Bank 2
$\overline{\text{SPI1_SCS[0]}}$ / EPWM1B / PRU0_R30[7] / **GP2[14]** / TM64P3_IN12	E19	I/O	CP[14]	A	
SPI1_CLK / **GP2[13]**	G19	I/O	CP[15]	A	
$\overline{\text{SPI1_ENA}}$ / **GP2[12]**	H16	I/O	CP[15]	A	
SPI1_SOMI / **GP2[11]**	H17	I/O	CP[15]	A	
SPI1_SIMO / **GP2[10]**	G17	I/O	CP[15]	A	
EMA_BA[1] / **GP2[9]**	A15	I/O	CP[16]	B	
EMA_BA[0] / **GP2[8]**	C15	I/O	CP[16]	B	
EMA_CLK / PRU0_R30[5] / **GP2[7]** / PRU0_R31[5]	B7	I/O	CP[16]	B	
EMA_SDCKE / PRU0_R30[4] / **GP2[6]** / PRU0_R31[4]	D8	I/O	CP[16]	B	
$\overline{\text{EMA_RAS}}$ / PRU0_R30[3] / **GP2[5]** / PRU0_R31[3]	A16	I/O	CP[16]	B	
$\overline{\text{EMA_CAS}}$ / PRU0_R30[2] / **GP2[4]** / PRU0_R31[2]	A9	I/O	CP[16]	B	
$\overline{\text{EMA_WEN_DQM[0]}}$ / **GP2[3]**	C8	I/O	CP[16]	B	
$\overline{\text{EMA_WEN_DQM[1]}}$ / **GP2[2]**	A5	I/O	CP[16]	B	
EMA_WAIT[1] / PRU0_R30[1] / **GP2[1]** / PRU0_R31[1]	B19	I/O	CP[16]	B	
$\overline{\text{EMA_CS[0]}}$ / **GP2[0]**	A18	I/O	CP[16]	B	
GP3					
$\overline{\text{EMA_CS[2]}}$ / **GP3[15]**	B17	I/O	CP[16]	B	GPIO Bank 3
$\overline{\text{EMA_CS[3]}}$ / **GP3[14]**	A17	I/O	CP[16]	B	
$\overline{\text{EMA_CS[4]}}$ / **GP3[13]**	F9	I/O	CP[16]	B	
$\overline{\text{EMA_CS[5]}}$ / **GP3[12]**	B16	I/O	CP[16]	B	
$\overline{\text{EMA_WE}}$ / **GP3[11]**	B9	I/O	CP[16]	B	
$\overline{\text{EMA_OE}}$ / **GP3[10]**	B15	I/O	CP[16]	B	
EMA_A_R$\overline{\text{W}}$ / **GP3[9]**	D10	I/O	CP[16]	B	
EMA_WAIT[0] / PRU0_R30[0] / **GP3[8]** / PRU0_R31[0]	B18	I/O	CP[16]	B	
EMA_D[15] / **GP3[7]**	E6	I/O	CP[17]	B	
EMA_D[14] / **GP3[6]**	C7	I/O	CP[17]	B	
EMA_D[13] / **GP3[5]**	B6	I/O	CP[17]	B	
EMA_D[12] / **GP3[4]**	A6	I/O	CP[17]	B	
EMA_D[11] / **GP3[3]**	D6	I/O	CP[17]	B	
EMA_D[10] / **GP3[2]**	A7	I/O	CP[17]	B	
EMA_D[9] / **GP3[1]**	D9	I/O	CP[17]	B	
EMA_D[8] / **GP3[0]**	E10	I/O	CP[17]	B	

Copyright © 2011–2013, Texas Instruments Incorporated

Table 2-29. General Purpose Input Output Terminal Functions (continued)

SIGNAL NAME	SIGNAL NO.	TYPE(1)	PULL(2)	POWER GROUP(3)	DESCRIPTION
GP4					
EMA_D[7] / **GP4[15]**	D7	I/O	CP[17]	B	GPIO Bank 4
EMA_D[6] / **GP4[14]**	C6	I/O	CP[17]	B	
EMA_D[5] / **GP4[13]**	E7	I/O	CP[17]	B	
EMA_D[4] / **GP4[12]**	B5	I/O	CP[17]	B	
EMA_D[3] / **GP4[11]**	E8	I/O	CP[17]	B	
EMA_D[2] / **GP4[10]**	B8	I/O	CP[17]	B	
EMA_D[1] / **GP4[9]**	A8	I/O	CP[17]	B	
EMA_D[0] / **GP4[8]**	C9	I/O	CP[17]	B	
MMCSD0_CLK / PRU1_R30[31] / **GP4[7]**	E9	I/O	CP[18]	B	
EMA_A[22] / MMCSD0_CMD / PRU1_R30[30] / **GP4[6]**	A10	I/O	CP[18]	B	
EMA_A[21] / MMCSD0_DAT[0] / PRU1_R30[29] / **GP4[5]**	B10	I/O	CP[18]	B	
EMA_A[20] / MMCSD0_DAT[1] / PRU1_R30[28] / **GP4[4]**	A11	I/O	CP[18]	B	
EMA_A[19] / MMCSD0_DAT[2] / PRU1_R30[27] / **GP4[3]**	C10	I/O	CP[18]	B	
EMA_A[18] / MMCSD0_DAT[3] / PRU1_R30[26] / **GP4[2]**	E11	I/O	CP[18]	B	
EMA_A[17] / MMCSD0_DAT[4] / PRU1_R30[25] / **GP4[1]**	B11	I/O	CP[18]	B	
EMA_A[16] / MMCSD0_DAT[5] / PRU1_R30[24] / **GP4[0]**	E12	I/O	CP[18]	B	
GP5					
EMA_A[15] / MMCSD0_DAT[6] / PRU1_R30[23] / **GP5[15]**/ PRU1_R31[23]	C11	I/O	CP[19]	B	GPIO Bank 5
EMA_A[14] / MMCSD0_DAT[7] /PRU1_R30[22] / **GP5[14]** / PRU1_R31[22]	A12	I/O	CP[19]	B	
EMA_A[13] / PRU0_R30[21] / PRU1_R30[21] / **GP5[13]** / PRU1_R31[21]	D11	I/O	CP[19]	B	
EMA_A[12] / PRU1_R30[20] / **GP5[12]** / PRU1_R31[20]	D13	I/O	CP[19]	B	
EMA_A[11] / PRU1_R30[19] / **GP5[11]** / PRU1_R31[19]	B12	I/O	CP[19]	B	
EMA_A[10] / PRU1_R30[18] / **GP5[10]** / PRU1_R31[18]	C12	I/O	CP[19]	B	
EMA_A[9] / PRU1_R30[17] / **GP5[9]**	D12	I/O	CP[19]	B	
EMA_A[8] / PRU1_R30[16] / **GP5[8]**	A13	I/O	CP[19]	B	
EMA_A[7] / PRU1_R30[15] / **GP5[7]**	B13	I/O	CP[20]	B	
EMA_A[6] / **GP5[6]**	E13	I/O	CP[20]	B	
EMA_A[5] / **GP5[5]**	C13	I/O	CP[20]	B	
EMA_A[4] / **GP5[4]**	A14	I/O	CP[20]	B	
EMA_A[3] / **GP5[3]**	D14	I/O	CP[20]	B	
EMA_A[2] / **GP5[2]**	B14	I/O	CP[20]	B	
EMA_A[1] / **GP5[1]**	D15	I/O	CP[20]	B	
EMA_A[0] / **GP5[0]**	C14	I/O	CP[20]	B	

Copyright © 2011–2013, Texas Instruments Incorporated

Table 2-29. General Purpose Input Output Terminal Functions (continued)

SIGNAL NAME	SIGNAL NO.	TYPE(1)	PULL(2)	POWER GROUP(3)	DESCRIPTION
GP6					
RESETOUT / $\overline{\text{UHPI_HAS}}$ / PRU1_R30[14] / **GP6[15]**	T17	I/O	CP[21]	C	GPIO Bank 6
CLKOUT / $\overline{\text{UHPI_HDS2}}$ / PRU1_R30[13] / **GP6[14]**	T18	I/O	CP[22]	C	
PRU0_R30[31] / $\overline{\text{UHPI_HRDY}}$ / PRU1_R30[12] / **GP6[13]**	R17	I/O	CP[23]	C	
PRU0_R30[30] / $\overline{\text{UHPI_HINT}}$ / PRU1_R30[11] / **GP6[12]**	R16	I/O	CP[23]	C	
PRU0_R30[29] / UHPI_HCNTL0 / UPP_CHA_CLOCK / **GP6[11]**	U17	I/O	CP[24]	C	
PRU0_R30[28] / UHPI_HCNTL1 / UPP_CHA_START / **GP6[10]**	W15	I/O	CP[24]	C	
PRU0_R30[27] / UHPI_HHWIL / UPP_CHA_ENABLE / **GP6[9]**	U16	I/O	CP[24]	C	
PRU0_R30[26] / UHPI_HR$\overline{\text{W}}$ / UPP_CHA_WAIT / **GP6[8]** / PRU1_R31[17]	T15	I/O	CP[24]	C	
VP_CLKIN0 / $\overline{\text{UHPI_HCS}}$ / PRU1_R30[10] / **GP6[7]** / UPP_2xTXCLK	W14	I/O	CP[25]	C	
VP_CLKIN1 / $\overline{\text{UHPI_HDS1}}$ / PRU1_R30[9] / **GP6[6]** / PRU1_R31[16]	V15	I/O	CP[25]	C	
VP_DIN[8] / UHPI_HD[0] / UPP_D[0] / **GP6[5]** / PRU1_R31[0]	P17	I/O	CP[27]	C	
VP_CLKIN2 / MMCSD1_DAT[3] / PRU1_R30[3] / **GP6[4]** / PRU1_R31[4]	H3	I/O	CP[30]	C	
VP_CLKOUT2 / MMCSD1_DAT[2] / PRU1_R30[2] / **GP6[3]** / PRU1_R31[3]	K3	I/O	CP[30]	C	
VP_CLKIN3 / MMCSD1_DAT[1] / PRU1_R30[1] / **GP6[2]** / PRU1_R31[2]	J3	I/O	CP[30]	C	
VP_CLKOUT3 / PRU1_R30[0] / **GP6[1]** / PRU1_R31[1]	K4	I/O	CP[30]	C	
$\overline{\text{LCD_AC_ENB_CS}}$ / **GP6[0]** / PRU1_R31[28]	R5	I/O	CP[31]	C	
GP7					
VP_DOUT[7] / LCD_D[7] / UPP_XD[15] / **GP7[15]** / PRU1_R31[15]	U2	I/O	CP[28]	C	GPIO Bank 7
VP_DOUT[6] / LCD_D[6] / UPP_XD[14] / **GP7[14]** / PRU1_R31[14]	U1	I/O	CP[28]	C	
VP_DOUT[5] / LCD_D[5] / UPP_XD[13] / **GP7[13]** / PRU1_R31[13]	V3	I/O	CP[28]	C	
VP_DOUT[4] / LCD_D[4] / UPP_XD[12] / **GP7[12]** / PRU1_R31[12]	V2	I/O	CP[28]	C	
VP_DOUT[3] / LCD_D[3] / UPP_XD[11] / **GP7[11]** / PRU1_R31[11]	V1	I/O	CP[28]	C	
VP_DOUT[2] / LCD_D[2] / UPP_XD[10] / **GP7[10]** / PRU1_R31[10]	W3	I/O	CP[28]	C	
VP_DOUT[1] / LCD_D[1] / UPP_XD[9] / **GP7[9]** / PRU1_R31[9]	W2	I/O	CP[28]	C	
VP_DOUT[0] / LCD_D[0] / UPP_XD[8] / **GP7[8]** /PRU1_R31[8]	W1	I/O	CP[28]	C	
VP_DOUT[15/]/ LCD_D[15]/ UPP_XD[7] / **GP7[7]** / BOOT[7]	P4	I/O	CP[29]	C	
VP_DOUT[14] / LCD_D[14] / UPP_XD[6] / **GP7[6]** / BOOT[6]	R3	I/O	CP[29]	C	
VP_DOUT[13] / LCD_D[13] / UPP_XD[5] / **GP7[5]** / BOOT[5]	R2	I/O	CP[29]	C	
VP_DOUT[12] / LCD_D[12] / UPP_XD[4] / **GP7[4]** / BOOT[4]	R1	I/O	CP[29]	C	
VP_DOUT[11] / LCD_D[11] / UPP_XD[3] / **GP7[3]** / BOOT[3]	T3	I/O	CP[29]	C	
VP_DOUT[10] / LCD_D[10] / UPP_XD[2] / **GP7[2]** / BOOT[2]	T2	I/O	CP[29]	C	
VP_DOUT[9] / LCD_D[9] / UPP_XD[1] / **GP7[1]** / BOOT[1]	T1	I/O	CP[29]	C	
VP_DOUT[8] / LCD_D[8] / UPP_XD[0] / **GP7[0]** / BOOT[0]	U3	I/O	CP[29]	C	

Copyright © 2011–2013, Texas Instruments Incorporated

Table 2-29. General Purpose Input Output Terminal Functions (continued)

SIGNAL NAME	SIGNAL NO.	TYPE(1)	PULL(2)	POWER GROUP(3)	DESCRIPTION
GP8					
PRU0_R30[25] / MMCSD1_DAT[0]/ UPP_CHB_CLOCK / **GP8[15]** / PRU1_R31[27]	G1	I/O	CP30]	C	GPIO Bank 8
PRU0_R30[24] / MMCSD1_CLK / UPP_CHB_START / **GP8[14]** / PRU1_R31[26]	G2	I/O	CP[30]	C	
PRU0_R30[23] / MMCSD1_CMD / UPP_CHB_ENABLE / **GP8[13]** / PRU1_R31[25]	J4	I/O	CP[30]	C	
PRU0_R30[22] / PRU1_R30[8] / UPP_CHB_WAIT / **GP8[12]** / PRU1_R31[24]	G3	I/O	CP[30]	C	
MMCSD1_DAT[7] / LCD_PCLK / PRU1_R30[7] / **GP8[11]**	F1	I/O	CP[31]	C	
MMCSD1_DAT[6] / LCD_MCLK / PRU1_R30[6] / **GP8[10]** / PRU1_R31[7]	F2	I/O	CP[31]	C	
MMCSD1_DAT[5] / LCD_HSYNC / PRU1_R30[5] / **GP8[9]** / PRU1_R31[6]	H4	I/O	CP[31]	C	
MMCSD1_DAT[4] / LCD_VSYNC / PRU1_R30[4] / **GP8[8]** / PRU1_R31[5]	G4	I/O	CP[31]	C	
AXR0 / ECAP0_APWM0 / **GP8[7]** / MII_TXD[0] / CLKS0	F3	I/O	CP[6]	A	
SPI0_SOMI /EPWMSYNCI / **GP8[6]** / MII_RXER	C16	I/O	CP[7]	A	
SPI0_SIMO / EPWMSYNCO / **GP8[5]** / MII_CRS	C18	I/O	CP[7]	A	
$\overline{\text{SPI0_SCS[5]}}$ / UART0_RXD / **GP8[4]** / MII_RXD[3]	C19	I/O	CP[8]	A	
$\overline{\text{SPI0_SCS[4]}}$ / UART0_TXD / **GP8[3]** / MII_RXD[2]	D18	I/O	CP[8]	A	
$\overline{\text{SPI0_SCS[3]}}$ / $\overline{\text{UART0_CTS}}$ / **GP8[2]** / MII_RXD[1] / SATA_MP_SWITCH	E17	I/O	CP[9]	A	
$\overline{\text{SPI0_SCS[2]}}$ / $\overline{\text{UART0_RTS}}$ / **GP8[1]** / MII_RXD[0] /SATA_CP_DET	D16	I/O	CP[9]	A	
RTCK/ **GP8[0]** (1)	K17	I/O	IPD	B	

(1) GP8[0] is initially configured as a reserved function after reset and will not be in a predictable state. This signal will only be stable after the GPIO configuration for this pin has been completed. Users should carefully consider the system implications of this pin being in an unknown state after reset.

2.9.26 Reserved and No Connect

Table 2-30. Reserved and No Connect Terminal Functions

SIGNAL		TYPE[1]	DESCRIPTION
NAME	NO.		
RSV2	T19	PWR	Reserved. For proper device operation, this pin must be tied either directly to CVDD or left unconnected (do not connect to ground).
NC	M3, M14, N16	—	Pin M3 should be left unconnected (***do not*** connect to power or ground) Pins M14 and N16 may be left unconnected or connected to ground (VSS)

(1) PWR = Supply voltage.

Copyright © 2011–2013, Texas Instruments Incorporated

2.9.27 Supply and Ground

Table 2-31. Supply and Ground Terminal Functions

SIGNAL		TYPE(1)	DESCRIPTION
NAME	NO.		
CVDD (Core supply)	E15, G7, G8, G13, H6, H7, H10, H11, H12, H13, J6, J12, K6, K12, L12, M8, M9, N8	PWR	Variable (1.3V - 1.0V) core supply voltage pins
RVDD (Internal RAM supply)	E5, H14, N7	PWR	1.3V internal ram supply voltage pins (for 456 MHz versions) 1.2V internal ram supply voltage pins (for 375 MHz versions)
DVDD18 (I/O supply)	F14, G6, G10, G11, G12, J13, K5, L6, P13, R13	PWR	1.8V I/O supply voltage pins. DVDD18 must be powered even if all of the DVDD3318_x supplies are operated at 3.3V.
DVDD3318_A (I/O supply)	F5, F15, G5, G14, G15, H5	PWR	1.8V or 3.3-V dual-voltage LVCMOS I/O supply voltage pins, Group A
DVDD3318_B (I/O supply)	E14, F6, F7, F8, F10, F11, F12, F13, G9, J14, K15	PWR	1.8V or 3.3-V dual-voltage LVCMOS I/O supply voltage pins, Group B
DVDD3318_C (I/O supply)	J5, K13, L4, L13, M13, N13, P5, P6, P12, R4	PWR	1.8V or 3.3-V dual-voltage LVCMOS I/O supply voltage pins, Group C
VSS (Ground)	A19, H8, H9, H15, J7, J8, J9, J10, J11, K7, K8, K9, K10, K11, L5, L7, L8, L9, L10, L11, M4, M5, M6, M7, M10, M11, N5, N11, N12, P11	GND	Ground pins.

(1) PWR = Supply voltage, GND - Ground.

2.10 Unused Pin Configurations

All signals multiplexed with multiple functions may be used as an alternate function if a given peripheral is not used. Unused non-multiplexed signals and some other specific signals should be handled as specified in the tables below.

If NMI is unused, it should be pulled-high externally through a 10k-ohm resistor to supply DVDD3318_B.

Table 2-32. Unused USB0 and USB1 Signal Configurations

SIGNAL NAME	Configuration (When USB0 and USB1 are not used)	Configuration (When only USB1 is not used)
USB0_DM	No Connect	Use as USB0 function
USB0_DP	No Connect	Use as USB0 function
USB0_ID	No Connect	Use as USB0 function
USB0_VBUS	No Connect	Use as USB0 function
USB0_DRVVBUS	No Connect	Use as USB0 function
USB0_VDDA33	No Connect	3.3V
USB0_VDDA18	No Connect	1.8V
USB0_VDDA12	No Connect	Internal USB PHY output connected to an external filter capacitor

Table 2-32. Unused USB0 and USB1 Signal Configurations (continued)

SIGNAL NAME	Configuration (When USB0 and USB1 are not used)	Configuration (When only USB1 is not used)
USB1_DM	No Connect	VSS
USB1_DP	No Connect	VSS
USB1_VDDA33	No Connect	No Connect
USB1_VDDA18	No Connect	No Connect
USB_REFCLKIN	No Connect or other peripheral function	Use for USB0 or other peripheral function
USB_CVDD	1.2V	1.2V

Table 2-33. Unused SATA Signal Configuration

SIGNAL NAME	Configuration
SATA_RXP	No Connect
$\overline{\text{SATA_RXN}}$	No Connect
SATA_TXP	No Connect
$\overline{\text{SATA_TXN}}$	No Connect
SATA_REFCLKP	No Connect
$\overline{\text{SATA_REFCLKN}}$	No Connect
SATA_MP_SWITCH	May be used as GPIO or other peripheral function
SATA_CP_DET	May be used as GPIO or other peripheral function
SATA_CP_POD	May be used as GPIO or other peripheral function
SATA_LED	May be used as GPIO or other peripheral function
SATA_REG	No Connect
SATA_VDDR	No Connect
SATA_VDD	Prior to silicon revision 2.0, this supply must be connected to a static 1.2V nominal supply. For silicon revision 2.0 and later, this supply may be left unconnected for additional power conservation.
SATA_VSS	VSS

Table 2-34. Unused RTC Signal Configuration

SIGNAL NAME	Configuration
RTC_XI	May be held high (CVDD) or low
$\overline{\text{RTC_XO}}$	No Connect
RTC_ALARM	May be used as GPIO or other peripheral function
RTC_CVDD	Connect to CVDD
RTC_VSS	VSS

Table 2-35. Unused DDR2/mDDR Controller Signal Configuration

SIGNAL NAME	Configuration (1)
DDR_D[15:0]	No Connect
DDR_A[13:0]	No Connect
DDR_CLKP	No Connect
DDR_CLKN	No Connect
DDR_CKE	No Connect
DDR_WE	No Connect
DDR_RAS	No Connect
DDR_CAS	No Connect
DDS_CS	No Connect

(1) To minimize power consumption, the DDR2/mDDR controller input receivers should be placed in power-down mode by setting VTPIO[14]=1.

Copyright © 2011–2013, Texas Instruments Incorporated

Table 2-35. Unused DDR2/mDDR Controller Signal Configuration (continued)

SIGNAL NAME	Configuration (1)
DDR_DQM[1:0]	No Connect
DDR_DQS[1:0]	No Connect
DDR_BA[2:0]	No Connect
DDR_DQGATE0	No Connect
DDR_DQGATE1	No Connect
DDR_ZP	No Connect
DDR_VREF	No Connect
DDR_DVDD18	No Connect

Copyright © 2011–2013, Texas Instruments Incorporated

3 Device Configuration

3.1 Boot Modes

This device supports a variety of boot modes through an internal ARM ROM bootloader. This device does not support dedicated hardware boot modes; therefore, all boot modes utilize the internal ARM ROM. The input states of the BOOT pins are sampled and latched into the BOOTCFG register, which is part of the system configuration (SYSCFG) module, when device reset is deasserted. Boot mode selection is determined by the values of the BOOT pins.

See *Using the OMAP-L1x8 Bootloader Application Report* (SPRAB41) for more details on the ROM Boot Loader.

The following boot modes are supported:

- NAND Flash boot
  - 8-bit NAND
  - 16-bit NAND (supported on ROM revisions after d800k002 -- see the bootloader documents mentioned above to determine the ROM revision)
- NOR Flash boot
  - NOR Direct boot (8-bit or 16-bit)
  - NOR Legacy boot (8-bit or 16-bit)
  - NOR AIS boot (8-bit or 16-bit)
- HPI Boot
- I2C0/I2C1 Boot
  - EEPROM (Master Mode)
  - External Host (Slave Mode)
- SPI0/ SPI1 Boot
  - Serial Flash (Master Mode)
  - SERIAL EEPROM (Master Mode)
  - External Host (Slave Mode)
- UART0/UART1/UART2 Boot
  - External Host

3.2 SYSCFG Module

The following system level features of the chip are controlled by the SYSCFG peripheral:

- Readable Device, Die, and Chip Revision ID
- Control of Pin Multiplexing
- Priority of bus accesses different bus masters in the system
- Capture at power on reset the chip BOOT pin values and make them available to software
- Control of the DeepSleep power management function
- Enable and selection of the programmable pin pullups and pulldowns

Copyright © 2011–2013, Texas Instruments Incorporated

- Special case settings for peripherals:
  - Locking of PLL controller settings
  - Default burst sizes for EDMA3 transfer controllers
  - Selection of the source for the eCAP module input capture (including on chip sources)
  - McASP AMUTEIN selection and clearing of AMUTE status for the McASP
  - Control of the reference clock source and other side-band signals for both of the integrated USB PHYs
  - Clock source selection for EMIFA
  - DDR2 Controller PHY settings
  - SATA PHY power management controls
- Selects the source of emulation suspend signal (from either ARM or DSP) of peripherals supporting this function.
- Control of on-chip inter-processor interrupts for signaling between ARM and DSP

Many registers are accessible only by a host (ARM or DSP) when it is operating in its privileged mode. (ex. from the kernel, but not from user space code).

Table 3-1. System Configuration (SYSCFG) Module Register Access

BYTE ADDRESS	ACRONYM	REGISTER DESCRIPTION	REGISTER ACCESS
0x01C1 4000	REVID	Revision Identification Register	—
0x01C1 4008	DIEIDR0	Device Identification Register 0	—
0x01C1 400C	DIEIDR1	Device Identification Register 1	—
0x01C1 4010	DIEIDR2	Device Identification Register 2	—
0x01C1 4014	DIEIDR3	Device Identification Register 3	—
0x01C1 4020	BOOTCFG	Boot Configuration Register	Privileged mode
0x01C1 4038	KICK0R	Kick 0 Register	Privileged mode
0x01C1 403C	KICK1R	Kick 1 Register	Privileged mode
0x01C1 4040	HOST0CFG	Host 0 Configuration Register	—
0x01C1 4044	HOST1CFG	Host 1 Configuration Register	—
0x01C1 40E0	IRAWSTAT	Interrupt Raw Status/Set Register	Privileged mode
0x01C1 40E4	IENSTAT	Interrupt Enable Status/Clear Register	Privileged mode
0x01C1 40E8	IENSET	Interrupt Enable Register	Privileged mode
0x01C1 40EC	IENCLR	Interrupt Enable Clear Register	Privileged mode
0x01C1 40F0	EOI	End of Interrupt Register	Privileged mode
0x01C1 40F4	FLTADDRR	Fault Address Register	Privileged mode
0x01C1 40F8	FLTSTAT	Fault Status Register	—
0x01C1 4110	MSTPRI0	Master Priority 0 Registers	Privileged mode
0x01C1 4114	MSTPRI1	Master Priority 1 Registers	Privileged mode
0x01C1 4118	MSTPRI2	Master Priority 2 Registers	Privileged mode
0x01C1 4120	PINMUX0	Pin Multiplexing Control 0 Register	Privileged mode
0x01C1 4124	PINMUX1	Pin Multiplexing Control 1 Register	Privileged mode
0x01C1 4128	PINMUX2	Pin Multiplexing Control 2 Register	Privileged mode
0x01C1 412C	PINMUX3	Pin Multiplexing Control 3 Register	Privileged mode
0x01C1 4130	PINMUX4	Pin Multiplexing Control 4 Register	Privileged mode
0x01C1 4134	PINMUX5	Pin Multiplexing Control 5 Register	Privileged mode
0x01C1 4138	PINMUX6	Pin Multiplexing Control 6 Register	Privileged mode
0x01C1 413C	PINMUX7	Pin Multiplexing Control 7 Register	Privileged mode
0x01C1 4140	PINMUX8	Pin Multiplexing Control 8 Register	Privileged mode
0x01C1 4144	PINMUX9	Pin Multiplexing Control 9 Register	Privileged mode
0x01C1 4148	PINMUX10	Pin Multiplexing Control 10 Register	Privileged mode

Copyright © 2011–2013, Texas Instruments Incorporated

Table 3-1. System Configuration (SYSCFG) Module Register Access (continued)

BYTE ADDRESS	ACRONYM	REGISTER DESCRIPTION	REGISTER ACCESS
0x01C1 414C	PINMUX11	Pin Multiplexing Control 11 Register	Privileged mode
0x01C1 4150	PINMUX12	Pin Multiplexing Control 12 Register	Privileged mode
0x01C1 4154	PINMUX13	Pin Multiplexing Control 13 Register	Privileged mode
0x01C1 4158	PINMUX14	Pin Multiplexing Control 14 Register	Privileged mode
0x01C1 415C	PINMUX15	Pin Multiplexing Control 15 Register	Privileged mode
0x01C1 4160	PINMUX16	Pin Multiplexing Control 16 Register	Privileged mode
0x01C1 4164	PINMUX17	Pin Multiplexing Control 17 Register	Privileged mode
0x01C1 4168	PINMUX18	Pin Multiplexing Control 18 Register	Privileged mode
0x01C1 416C	PINMUX19	Pin Multiplexing Control 19 Register	Privileged mode
0x01C1 4170	SUSPSRC	Suspend Source Register	Privileged mode
0x01C1 4174	CHIPSIG	Chip Signal Register	—
0x01C1 4178	CHIPSIG_CLR	Chip Signal Clear Register	—
0x01C1 417C	CFGCHIP0	Chip Configuration 0 Register	Privileged mode
0x01C1 4180	CFGCHIP1	Chip Configuration 1 Register	Privileged mode
0x01C1 4184	CFGCHIP2	Chip Configuration 2 Register	Privileged mode
0x01C1 4188	CFGCHIP3	Chip Configuration 3 Register	Privileged mode
0x01C1 418C	CFGCHIP4	Chip Configuration 4 Register	Privileged mode
0x01E2 C000	VTPIO_CTL	VTPIO COntrol Register	Privileged mode
0x01E2 C004	DDR_SLEW	DDR Slew Register	Privileged mode
0x01E2 C008	DeepSleep	DeepSleep Register	Privileged mode
0x01E2 C00C	PUPD_ENA	Pullup / Pulldown Enable Register	Privileged mode
0x01E2 C010	PUPD_SEL	Pullup / Pulldown Selection Register	Privileged mode
0x01E2 C014	RXACTIVE	RXACTIVE Control Register	Privileged mode
0x01E2 C018	PWRDN	PWRDN Control Register	Privileged mode

Copyright © 2011–2013, Texas Instruments Incorporated

3.3 Pullup/Pulldown Resistors

Proper board design should ensure that input pins to the device always be at a valid logic level and not floating. This may be achieved via pullup/pulldown resistors. The device features internal pullup (IPU) and internal pulldown (IPD) resistors on most pins to eliminate the need, unless otherwise noted, for external pullup/pulldown resistors.

An external pullup/pulldown resistor needs to be used in the following situations:

- Boot and Configuration Pins: If the pin is both routed out and 3-stated (not driven), an external pullup/pulldown resistor is strongly recommended, even if the IPU/IPD matches the desired value/state.
- Other Input Pins: If the IPU/IPD does not match the desired value/state, use an external pullup/pulldown resistor to pull the signal to the opposite rail.

For the boot and configuration pins, if they are both routed out and 3-stated (not driven), it is strongly recommended that an external pullup/pulldown resistor be implemented. Although, internal pullup/pulldown resistors exist on these pins and they may match the desired configuration value, providing external connectivity can help ensure that valid logic levels are latched on these device boot and configuration pins. In addition, applying external pullup/pulldown resistors on the boot and configuration pins adds convenience to the user in debugging and flexibility in switching operating modes.

Tips for choosing an external pullup/pulldown resistor:

- Consider the total amount of current that may pass through the pullup or pulldown resistor. Make sure to include the leakage currents of all the devices connected to the net, as well as any internal pullup or pulldown resistors.
- Decide a target value for the net. For a pulldown resistor, this should be below the lowest V_{IL} level of all inputs connected to the net. For a pullup resistor, this should be above the highest V_{IH} level of all inputs on the net. A reasonable choice would be to target the V_{OL} or V_{OH} levels for the logic family of the limiting device; which, by definition, have margin to the V_{IL} and V_{IH} levels.
- Select a pullup/pulldown resistor with the largest possible value; but, which can still ensure that the net will reach the target pulled value when maximum current from all devices on the net is flowing through the resistor. The current to be considered includes leakage current plus, any other internal and external pullup/pulldown resistors on the net.
- For bidirectional nets, there is an additional consideration which sets a lower limit on the resistance value of the external resistor. Verify that the resistance is small enough that the weakest output buffer can drive the net to the opposite logic level (including margin).
- Remember to include tolerances when selecting the resistor value.
- For pullup resistors, also remember to include tolerances on the IO supply rail.
- For most systems, a 1-kΩ resistor can be used to oppose the IPU/IPD while meeting the above criteria. Users should confirm this resistor value is correct for their specific application.
- For most systems, a 20-kΩ resistor can be used to compliment the IPU/IPD on the boot and configuration pins while meeting the above criteria. Users should confirm this resistor value is correct for their specific application.
- For more detailed information on input current (I_I), and the low-/high-level input voltages (V_{IL} and V_{IH}) for the device, see Section 4.2 , Recommended Operating Conditions.
- For the internal pullup/pulldown resistors for all device pins, see the peripheral/system-specific terminal functions table.

4 Device Operating Conditions

4.1 Absolute Maximum Ratings Over Operating Junction Temperature Range (Unless Otherwise Noted) (1)

Supply voltage ranges	Core Logic, Variable and Fixed (CVDD, RVDD, RTC_CVDD, PLL0_VDDA , PLL1_VDDA , SATA_VDD, USB_CVDD) (2)	-0.5 V to 1.4 V
	I/O, 1.8V (USB0_VDDA18, USB1_VDDA18, SATA_VDDR, DDR_DVDD18) (2)	-0.5 V to 2 V
	I/O, 3.3V (DVDD3318_A, DVDD3318_B, DVDD3318_C, USB0_VDDA33, USB1_VDDA33) (2)	-0.5 V to 3.8V
Input voltage (V_I) ranges	Oscillator inputs (OSCIN, RTC_XI), 1.2V	-0.3 V to CVDD + 0.3V
	Dual-voltage LVCMOS inputs, 3.3V or 1.8V (Steady State)	-0.3V to DVDD + 0.3V
	Dual-voltage LVCMOS inputs, operated at 3.3V (Transient)	DVDD + 20% up to 20% of Signal Period
	Dual-voltage LVCMOS inputs, operated at 1.8V (Transient)	DVDD + 30% up to 30% of Signal Period
	USB 5V Tolerant IOs: (USB0_DM, USB0_DP, USB0_ID, USB1_DM, USB1_DP)	5.25V (3)
	USB0 VBUS Pin	5.50V (3)
Output voltage (V_O) ranges	Dual-voltage LVCMOS outputs, 3.3V or 1.8V (Steady State)	-0.5 V to DVDD + 0.3V
	Dual-voltage LVCMOS outputs, operated at 3.3V (Transient)	DVDD + 20% up to 20% of Signal Period
	Dual-voltage LVCMOS outputs, operated at 1.8V (Transient)	DVDD + 30% up to 30% of Signal Period
Clamp Current	Input or Output Voltages 0.3V above or below their respective power rails. Limit clamp current that flows through the I/O's internal diode protection cells.	±20mA
Operating Junction Temperature ranges, T_J	Commercial (default)	0°C to 90°C
	Industrial (D suffix)	-40°C to 90°C
	Extended (A suffix)	-40°C to 105°C
Storage temperature range, T_{stg}	(default)	-55°C to 150°C

(1) Stresses beyond those listed under "absolute maximum ratings" may cause permanent damage to the device. These are stress ratings only, and functional operation of the device at these or any other conditions beyond those indicated under "recommended operating conditions" is not implied. Exposure to absolute-maximum-rated conditions for extended periods may affect device reliability.
(2) All voltage values are with respect to VSS, USB0_VSSA33, USB0_VSSA, PLL0_VSSA, OSCVSS, RTC_VSS
(3) Up to a maximum of 24 hours.

Copyright © 2011–2013, Texas Instruments Incorporated

4.2 Recommended Operating Conditions

	NAME	DESCRIPTION	CONDITION	MIN	NOM	MAX	UNIT
Supply Voltage	CVDD	Core Logic Supply Voltage (variable)	1.3V operating point	1.25	1.3	1.35	V
			1.2V operating point	1.14	1.2	1.32	
			1.1V operating point	1.05	1.1	1.16	
			1.0V operating point	0.95	1.0	1.05	
	RVDD	Internal RAM Supply Voltage	456 MHz versions	1.25	1.3	1.35	V
			375 MHz versions	1.14	1.2	1.32	
	RTC_CVDD (1)	RTC Core Logic Supply Voltage		0.9	1.2	1.32	V
	PLL0_VDDA	PLL0 Supply Voltage		1.14	1.2	1.32	V
	PLL1_VDDA	PLL1 Supply Voltage		1.14	1.2	1.32	V
	SATA_VDD	SATA Core Logic Supply Voltage		1.14	1.2	1.32	V
	USB_CVDD	USB0, USB1 Core Logic Supply Voltage		1.14	1.2	1.32	V
	USB0_VDDA18	USB0 PHY Supply Voltage		1.71	1.8	1.89	V
	USB0_VDDA33	USB0 PHY Supply Voltage		3.15	3.3	3.45	V
	USB1_VDDA18	USB1 PHY Supply Voltage		1.71	1.8	1.89	V
	USB1_VDDA33	USB1 PHY Supply Voltage		3.15	3.3	3.45	V
	SATA_VDDR	SATA PHY Internal Regulator Supply Voltage		1.71	1.8	1.89	V
	DDR_DVDD18 (2)	DDR2 PHY Supply Voltage		1.71	1.8	1.89	V
	DDR_VREF	DDR2/mDDR reference voltage		0.49* DDR_DVDD18	0.5* DDR_DVDD18	0.51* DDR_DVDD18	V
	DDR_ZP	DDR2/mDDR impedance control, connected via 50Ω resistor to Vss			Vss		V
	DVDD3318_A	Power Group A Dual-voltage IO Supply Voltage	1.8V operating point	1.71	1.8	1.89	V
			3.3V operating point	3.15	3.3	3.45	V
	DVDD3318_B	Power Group B Dual-voltage IO Supply Voltage	1.8V operating point	1.71	1.8	1.89	V
			3.3V operating point	3.15	3.3	3.45	V
	DVDD3318_C	Power Group C Dual-voltage IO Supply Voltage	1.8V operating point	1.71	1.8	1.89	V
			3.3V operating point	3.15	3.3	3.45	V
Supply Ground	VSS	Core Logic Digital Ground		0	0	0	V
	PLL0_VSSA	PLL0 Ground					
	PLL1_VSSA	PLL1 Ground					
	SATA_VSS	SATA PHY Ground					
	OSCVSS (3)	Oscillator Ground					
	RTC_VSS (3)	RTC Oscillator Ground					
	USB0_VSSA	USB0 PHY Ground					
	USB0_VSSA33	USB0 PHY Ground					V
Voltage Input High	V_{IH}	High-level input voltage, Dual-voltage I/O, 3.3V (4)		2			V
		High-level input voltage, Dual-voltage I/O, 1.8V (4)		0.65*DVDD			V
		High-level input voltage, RTC_XI		0.8*RTC_CVDD			V
		High-level input voltage, OSCIN		0.8*CVDD			V
Voltage Input Low	V_{IL}	Low-level input voltage, Dual-voltage I/O, 3.3V (4)				0.8	V
		Low-level input voltage, Dual-voltage I/O, 1.8V (4)				0.35*DVDD	V
		Low-level input voltage, RTC_XI				0.2*RTC_CVDD	V
		Low-level input voltage, OSCIN				0.2*CVDD	V
USB	USB0_VBUS	USB external charge pump input		0		5.25	V

(1) The RTC provides an option for isolating the RTC_CVDD from the CVDD to reduce current leakage when the RTC is powered independently. If these power supplies are not isolated (CTRL.SPLITPOWER=0), RTC_CVDD must be equal to or greater than CVDD. If these power supplies are isolated (CTRL.SPLITPOWER=1), RTC_CVDD may be lower than CVDD.
(2) DVDD18 must be powered even if all of the DVDD3318_x supplies are operated at 3.3V.
(3) When an external crystal is used oscillator (OSC_VSS, RTC_VSS) ground must be kept separate from other grounds and connected directly to the crystal load capacitor ground. These pins are shorted to VSS on the device itself and should not be connected to VSS on the circuit board. If a crystal is not used and the clock input is driven directly, then the oscillator VSS may be connected to board ground.
(4) These IO specifications apply to the dual-voltage IOs only and do not apply to DDR2/mDDR or SATA interfaces. DDR2/mDDR IOs are 1.8V IOs and adhere to the JESD79-2A standard.

Copyright © 2011–2013, Texas Instruments Incorporated

Recommended Operating Conditions *(continued)*

	NAME	DESCRIPTION	CONDITION	MIN	NOM	MAX	UNIT
Differential Clock Input Voltage		Differential input voltage, SATA_REFCLKP and $\overline{\text{SATA_REFCLKN}}$		250			mV
Transition Time	t_t	Transition time, 10%-90%, All Inputs (unless otherwise specified in the electrical data sections)				0.25P or 10 (5)	ns
Operating Frequency	$F_{PLL0_SYSCLK1,6}$	Commercial temperature grade (default)	CVDD = 1.3V operating point	0		456 (6)	MHz
			CVDD = 1.2V operating point	0		375 (7)	
			CVDD = 1.1V operating point	0		200 (6)	
			CVDD = 1.0V operating point	0		100 (6)	
		Industrial temperature grade (D suffix)	CVDD = 1.3V operating point	0		456 (6)	MHz
			CVDD = 1.2V operating point	0		375 (7)	
			CVDD = 1.1V operating point	0		200 (6)	
			CVDD = 1.0V operating point	0		100 (6)	
		Extended temperature grade (A suffix)	CVDD = 1.2V operating point	0		375 (7)	MHz
			CVDD = 1.1V operating point	0		200 (6)	
			CVDD = 1.0V operating point	0		100 (6)	

(5) Whichever is smaller. P = the period of the applied signal. Maintaining transition times as fast as possible is recommended to improve noise immunity on input signals.
(6) This operating points is not supported on revision 1.x silicon.
(7) This operating point is 300 MHz on revision 1.x silicon.

Copyright © 2011–2013, Texas Instruments Incorporated

4.3 Notes on Recommended Power-On Hours (POH)

The information in the section below is provided solely for your convenience and does not extend or modify the warranty provided under TI's standard terms and conditions for TI semiconductor products.

To avoid significant degradation, the device power-on hours (POH) must be limited to the following:

Table 4-1. Recommended Power-On Hours

Silicon Revision	Speed Grade	Operating Junction Temperature (T_J)	Nominal CVDD Voltage (V)	Power-On Hours [POH] (hours)
A	300 MHz	0 to 90 °C	1.2V	100,000
B	300 MHz	0 to 90 °C	1.2V	100,000
B	375 MHz	0 to 90 °C	1.2V	100,000
B	375 MHz	-40 to 105 °C	1.2V	75,000 (1)
B	456 MHz	0 to 90 °C	1.3V	100,000
B	456 MHz	-40 to 90 °C	1.3V	100,000

(1) 100,000 POH can be achieved at this temperature condition if the device operation is limited to 345 MHz

Note: Logic functions and parameter values are not assured out of the range specified in the recommended operating conditions.

The above notations cannot be deemed a warranty or deemed to extend or modify the warranty under TI's standard terms and conditions for TI semiconductor products.

4.4 Electrical Characteristics Over Recommended Ranges of Supply Voltage and Operating Junction Temperature (Unless Otherwise Noted)

PARAMETER		TEST CONDITIONS	MIN	TYP	MAX	UNIT
V_{OH}	High-level output voltage (dual-voltage LVCMOS IOs at 3.3V)(1)	DVDD= 3.15V, I_{OH} = -4 mA	2.4			V
		DVDD= 3.15V, I_{OH} = -100 µA	2.95			V
	High-level output voltage (dual-voltage LVCMOS IOs at 1.8V)(1)	DVDD= 1.65V, I_{OH} = -2 mA	DVDD-0.45			V
V_{OL}	Low-level output voltage (dual-voltage LVCMOS I/Os at 3.3V)	DVDD= 3.15V, I_{OL} = 4mA			0.4	V
		DVDD= 3.15V, I_{OL} = 100 µA			0.2	V
	Low-level output voltage (dual-voltage LVCMOS I/Os at 1.8V)	DVDD= 1.65V, I_{OL} = 2mA			0.45	V
I_I (2)	Input current(1) (dual-voltage LVCMOS I/Os)	V_I = VSS to DVDD without opposing internal resistor			±9	µA
		V_I = VSS to DVDD with opposing internal pullup resistor (3)	70		310	µA
		V_I = VSS to DVDD with opposing internal pulldown resistor (3)	-75		-270	µA
	Input current (DDR2/mDDR I/Os)	V_I = VSS to DVDD with opposing internal pulldown resistor (3)	-77		-286	µA
I_{OH}	High-level output current(1) (dual-voltage LVCMOS I/Os)				-6	mA
I_{OL}	Low-level output current(1) (dual-voltage LVCMOS I/Os)				6	mA
Capacitance	Input capacitance (dual-voltage LVCMOS)			3		pF
	Output capacitance (dual-voltage LVCMOS)			3		pF

(1) These IO specifications apply to the dual-voltage IOs only and do not apply to DDR2/mDDR or SATA interfaces. DDR2/mDDR IOs are 1.8V IOs and adhere to the JESD79-2A standard. USB0 I/Os adhere to the USB2.0 standard. USB1 I/Os adhere to the USB1.1 standard. SATA I/Os adhere to the SATA-I and SATA-II standards.
(2) I_I applies to input-only pins and bi-directional pins. For input-only pins, I_I indicates the input leakage current. For bi-directional pins, I_I indicates the input leakage current and off-state (Hi-Z) output leakage current.
(3) Applies only to pins with an internal pullup (IPU) or pulldown (IPD) resistor. The pull-up and pull-down strengths shown represent the minimum and maximum strength across process variation.

Copyright © 2011–2013, Texas Instruments Incorporated

5 Peripheral Information and Electrical Specifications

5.1 Parameter Information

5.1.1 Parameter Information Device-Specific Information

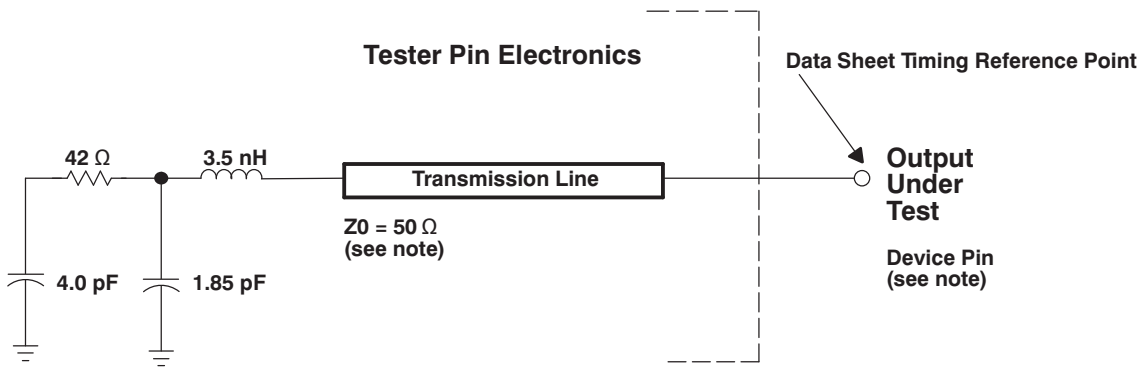

A. The data sheet provides timing at the device pin. For output timing analysis, the tester pin electronics and its transmission line effects must be taken into account. A transmission line with a delay of 2 ns or longer can be used to produce the desired transmission line effect. The transmission line is intended as a load only. It is not necessary to add or subtract the transmission line delay (2 ns or longer) from the data sheet timings.
Input requirements in this data sheet are tested with an input slew rate of < 4 Volts per nanosecond (4 V/ns) at the device pin and the input signals are driven between 0V and the appropriate IO supply rail for the signal.

Figure 5-1. Test Load Circuit for AC Timing Measurements

The load capacitance value stated is only for characterization and measurement of AC timing signals. This load capacitance value does not indicate the maximum load the device is capable of driving.

5.1.1.1 Signal Transition Levels

All input and output timing parameters are referenced to V_{ref} for both "0" and "1" logic levels.

For 3.3 V I/O, V_{ref} = 1.65 V.

For 1.8 V I/O, V_{ref} = 0.9 V.

For 1.2 V I/O, V_{ref} = 0.6 V.

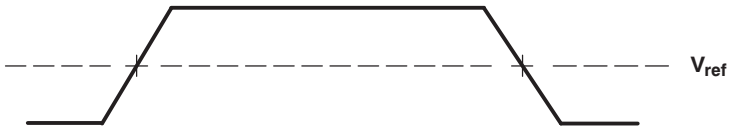

Figure 5-2. Input and Output Voltage Reference Levels for AC Timing Measurements

All rise and fall transition timing parameters are referenced to V_{IL} MAX and V_{IH} MIN for input clocks, V_{OL}MAX and V_{OH} MIN for output clocks

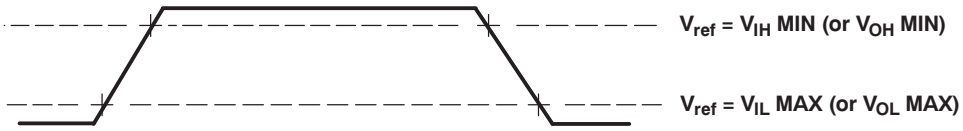

Figure 5-3. Rise and Fall Transition Time Voltage Reference Levels

5.2 Recommended Clock and Control Signal Transition Behavior

All clocks and control signals ***must*** transition between V_{IH} and V_{IL} (or between V_{IL} and V_{IH}) in a monotonic manner.

5.3 Power Supplies

5.3.1 Power-on Sequence

The device should be powered-on in the following order:

- 1) RTC (RTC_CVDD) may be powered from an external device (such as a battery) prior to all other supplies being applied or powered-up at the same time as CVDD. If the RTC is not used, RTC_CVDD should be connected to CVDD. RTC_CVDD should not be left unpowered while CVDD is powered.
- 2a) All variable 1.3V - 1.0V core logic supplies (CVDD)
- 2b) All static core logic supplies (RVDD, VDDA_12_PLL0, VDDA_12_PLL1, USB_CVDD , SATA_VDD). If voltage scaling is not used on the device, groups 2a) and 2b) can be controlled from the same power supply and powered up together.
- 3) All static 1.8V IO supplies (DVDD18, DDR_DVDD18, USB0_VDDA18 , USB1_VDDA18 and SATA_VDDR) and any of the LVCMOS IO supply groups used at 1.8V nominal (DVDD3318_A, DVDD3318_B, or DVDD3318_C).
- 4) All analog 3.3V PHY supplies (USB0_VDDA33 and USB1_VDDA33; these are not required if both USB0 and USB1 are not used) and any of the LVCMOS IO supply groups used at 3.3V nominal (DVDD3318_A, DVDD3318_B, or DVDD3318_C).

There is no specific required voltage ramp rate for any of the supplies as long as the LVCMOS supplies operated at 3.3V (DVDD3318_A, DVDD3318_B, or DVDD3318_C) never exceed the STATIC 1.8V supplies by more than 2 volts.

RESET must be maintained active until all power supplies have reached their nominal values.

5.3.2 Power-off Sequence

The power supplies can be powered-off in any order as long as LVCMOS supplies operated at 3.3V (DVDD3318_A, DVDD3318_B, or DVDD3318_C) never exceed static 1.8V supplies by more than 2 volts. There is no specific required voltage ramp down rate for any of the supplies (except as required to meet the above mentioned voltage condition).

 Copyright © 2011–2013, Texas Instruments Incorporated

5.4 Reset

5.4.1 Power-On Reset (POR)

A power-on reset (POR) is required to place the device in a known good state after power-up. Power-On Reset is initiated by bringing $\overline{\text{RESET}}$ and $\overline{\text{TRST}}$ low at the same time. POR sets all of the device internal logic to its default state. All pins are tri-stated with the exception of $\overline{\text{RESETOUT}}$ which remains active through the reset sequence. $\overline{\text{RESETOUT}}$ is an output for use by other controllers in the system that indicates the device is currently in reset.

RTCK is maintained active through a POR.

A summary of the effects of Power-On Reset is given below:

- All internal logic (including emulation logic and the PLL logic) is reset to its default state
- Internal memory is not maintained through a POR
- $\overline{\text{RESETOUT}}$ goes active
- All device pins go to a high-impedance state
- The RTC peripheral is not reset during a POR. A software sequence is required to reset the RTC

A watchdog reset triggers a POR.

5.4.2 Warm Reset

A warm reset provides a limited reset to the device. Warm Reset is initiated by bringing only $\overline{\text{RESET}}$ low ($\overline{\text{TRST}}$ is maintained high through a warm reset). Warm reset sets certain portions of the device to their default state while leaving others unaltered. All pins are tri-stated with the exception of $\overline{\text{RESETOUT}}$ which remains active through the reset sequence. $\overline{\text{RESETOUT}}$ is an output for use by other controllers in the system that indicates the device is currently in reset.

RTCK is maintained active through a POR.

A summary of the effects of Warm Reset is given below:

- All internal logic (except for the emulation logic and the PLL logic) is reset to its default state
- Internal memory is maintained through a warm reset
- $\overline{\text{RESETOUT}}$ goes active
- All device pins go to a high-impedance state
- The RTC peripheral is not reset during a warm reset. A software sequence is required to reset the RTC

Copyright © 2011–2013, Texas Instruments Incorporated

5.4.3 Reset Electrical Data Timings

Table 5-1 assumes testing over the recommended operating conditions.

Table 5-1. Reset Timing Requirements ([1], [2])

NO.	PARAMETER		1.3V, 1.2V		1.1V		1.0V		UNIT
			MIN	MAX	MIN	MAX	MIN	MAX	
1	$t_{w(RSTL)}$	Pulse width, $\overline{RESET}$/$\overline{TRST}$ low	100		100		100		ns
2	$t_{su(BPV-RSTH)}$	Setup time, boot pins valid before $\overline{RESET}$/$\overline{TRST}$ high	20		20		20		ns
3	$t_{h(RSTH-BPV)}$	Hold time, boot pins valid after $\overline{RESET}$/$\overline{TRST}$ high	20		20		20		ns
4	$t_{d(RSTH-RESETOUTH)}$	$\overline{RESET}$ high to $\overline{RESETOUT}$ high; Warm reset		14		16		20	cycles[3]
		$\overline{RESET}$ high to $\overline{RESETOUT}$ high; Power-on Reset		14		16		20	
5	$t_{d(RSTL-RESETOUTL)}$	Delay time, $\overline{RESET}$/$\overline{TRST}$ low to $\overline{RESETOUT}$ low		14		16		20	ns

(1) $\overline{RESETOUT}$ is multiplexed with other pin functions. See the Terminal Functions table, Table 2-5 for details.
(2) For power-on reset (POR), the reset timings in this table refer to $\overline{RESET}$ and $\overline{TRST}$ together. For warm reset, the reset timings in this table refer to $\overline{RESET}$ only ($\overline{TRST}$ is held high).
(3) OSCIN cycles.

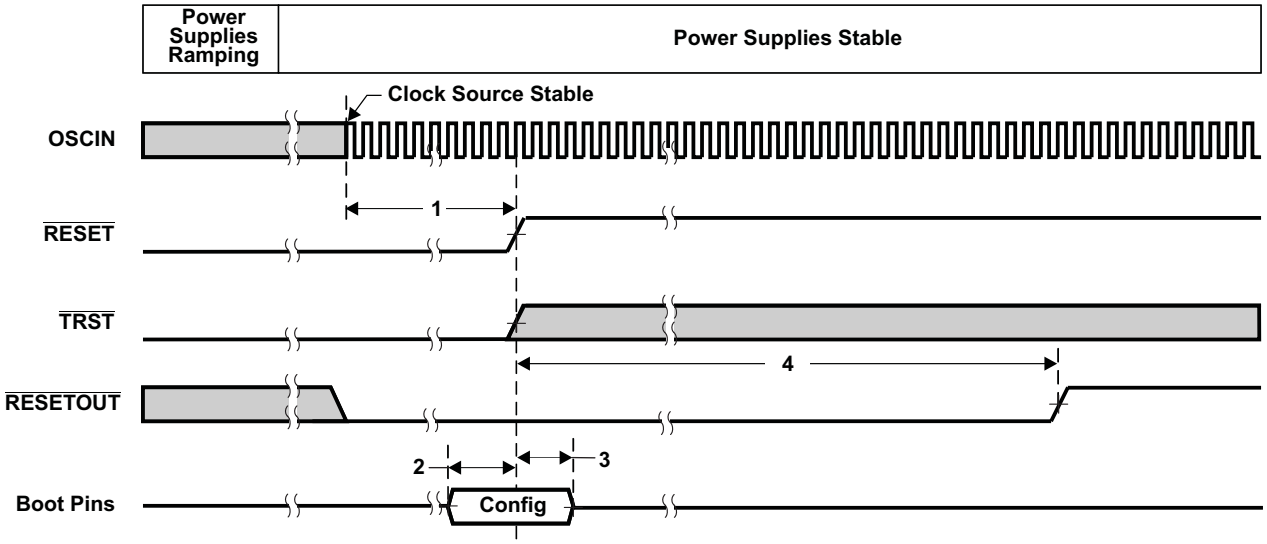

Figure 5-4. Power-On Reset (RESET and TRST active) Timing

Copyright © 2011–2013, Texas Instruments Incorporated

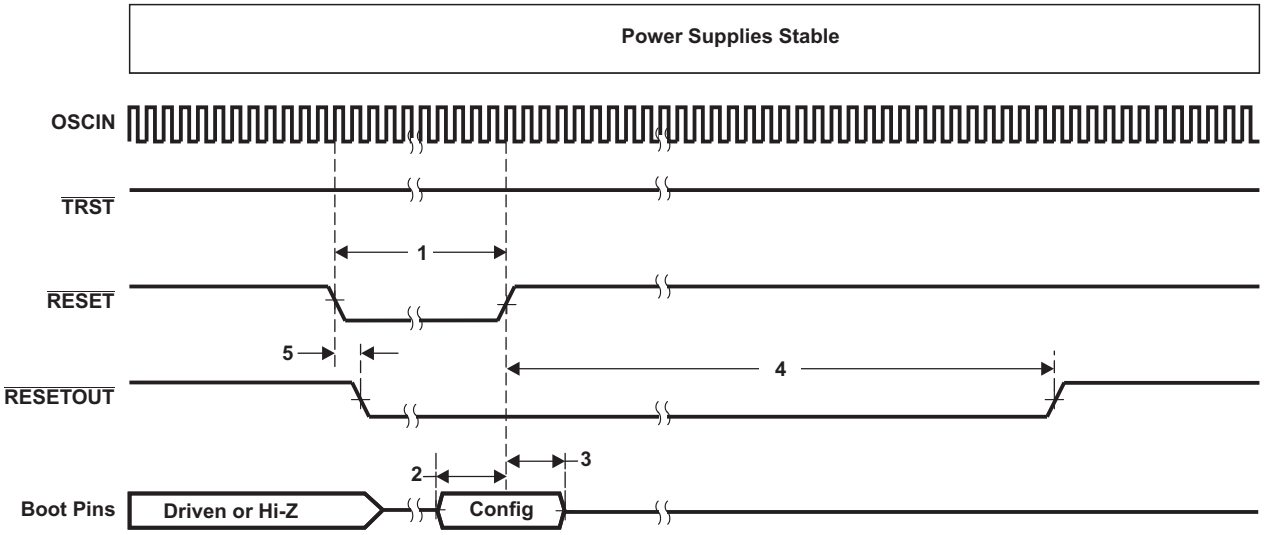

Figure 5-5. Warm Reset (RESET active, TRST high) Timing

5.5 Crystal Oscillator or External Clock Input

The device includes two choices to provide an external clock input, which is fed to the on-chip PLLs to generate high-frequency system clocks. These options are illustrated in Figure 5-6 and Figure 5-7. For input clock frequencies between 12 and 20 MHz, a crystal with 80 ohm max ESR is recommended. For input clock frequencies between 20 and 30 MHz, a crystal with 60 ohm max ESR is recommended. Typical load capacitance values are 10-20 pF, where the load capacitance is the series combination of C1 and C2.

Figure 5-6 illustrates the option that uses on-chip 1.2V oscillator with external crystal circuit. Figure 5-7 illustrates the option that uses an external 1.2V clock input.

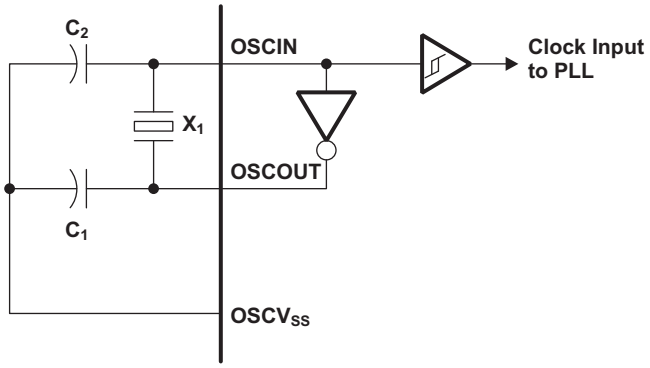

Figure 5-6. On-Chip Oscillator

Table 5-2. Oscillator Timing Requirements

PARAMETER		MIN	MAX	UNIT
f_{osc}	Oscillator frequency range (OSCIN/OSCOUT)	12	30	MHz

Copyright © 2011–2013, Texas Instruments Incorporated

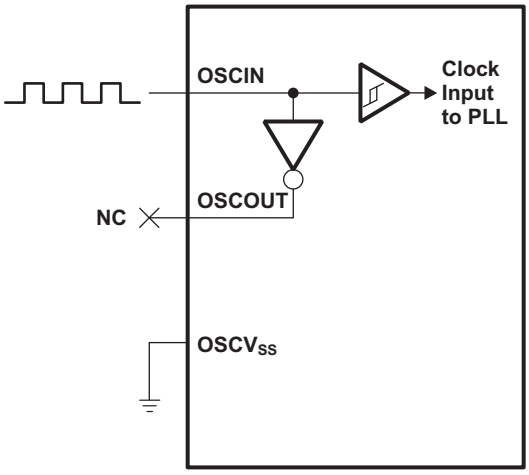

Figure 5-7. External 1.2V Clock Source

Table 5-3. OSCIN Timing Requirements for an Externally Driven Clock

PARAMETER		MIN	MAX	UNIT
f_{OSCIN}	OSCIN frequency range	12	50	MHz
$t_{c(OSCIN)}$	Cycle time, external clock driven on OSCIN	20		ns
$t_{w(OSCINH)}$	Pulse width high, external clock on OSCIN	0.4 $t_{c(OSCIN)}$		ns
$t_{w(OSCINL)}$	Pulse width low, external clock on OSCIN	0.4 $t_{c(OSCIN)}$		ns
$t_{t(OSCIN)}$	Transition time, OSCIN		0.25P or 10 (1)	ns
$t_{j(OSCIN)}$	Period jitter, OSCIN		0.02P	ns

(1) Whichever is smaller. P = the period of the applied signal. Maintaining transition times as fast as possible is recommended to improve noise immunity on input signals.

5.6 Clock PLLs

The device has two PLL controllers that provide clocks to different parts of the system. PLL0 provides clocks (though various dividers) to most of the components of the device. PLL1 provides clocks to the mDDR/DDR2 Controller and provides an alternate clock source for the ASYNC3 clock domain. This allows the peripherals on the ASYNC3 clock domain to be immune to frequency scaling operation on PLL0.

The PLL controller provides the following:

- Glitch-Free Transitions (on changing clock settings)
- Domain Clocks Alignment
- Clock Gating
- PLL power down

The various clock outputs given by the controller are as follows:

- Domain Clocks: SYSCLK [1:n]
- Auxiliary Clock from reference clock source: AUXCLK

Various dividers that can be used are as follows:

- Post-PLL Divider: POSTDIV
- SYSCLK Divider: D1, ¼, Dn

Various other controls supported are as follows:

- PLL Multiplier Control: PLLM
- Software programmable PLL Bypass: PLLEN

5.6.1 PLL Device-Specific Information

The device DSP generates the high-frequency internal clocks it requires through an on-chip PLL.

The PLL requires some external filtering components to reduce power supply noise as shown in Figure 5-8.

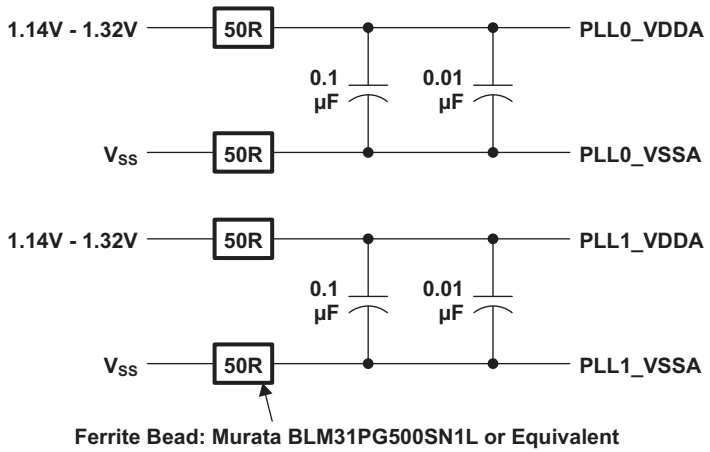

Figure 5-8. PLL External Filtering Components

The input to the PLL is either from the on-chip oscillator or from an external clock on the OSCIN pin. PLL0 outputs seven clocks that have programmable divider options. PLL1 outputs three clocks that have programmable divider options. Figure 5-9 illustrates the high-level view of the PLL Topology.

The PLLs are disabled by default after a device reset. They must be configured by software according to the allowable operating conditions listed in Table 5-4 before enabling the device to run from the PLL by setting PLLEN = 1.

 Copyright © 2011–2013, Texas Instruments Incorporated

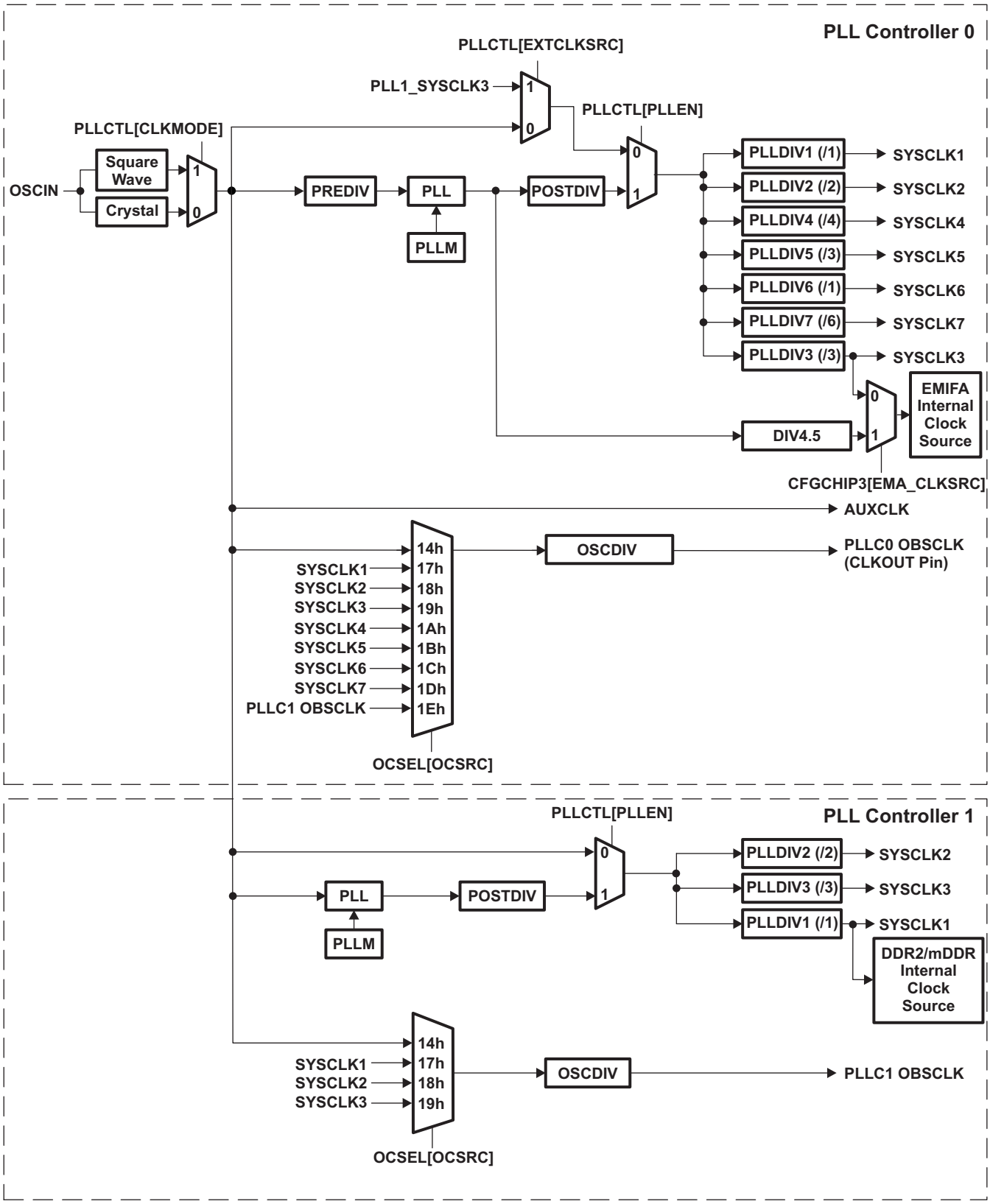

Figure 5-9. PLL Topology

Table 5-4. Allowed PLL Operating Conditions (PLL0 and PLL1)

NO.	PARAMETER	Default Value	MIN	MAX	UNIT
1	**PLLRST**: Assertion time during initialization	N/A	1000	N/A	ns
2	**Lock time**: The time that the application has to wait for the PLL to acquire lock before setting PLLEN, after changing PREDIV, PLLM, or OSCIN	N/A	N/A	Max PLL Lock Time = $\frac{2000\ N}{\sqrt{m}}$ where N = Pre-Divider Ratio M = PLL Multiplier (1)	(1)OSCIN cycles
3	**PREDIV**: Pre-divider value	/1	/1	/32	-
4	**PLLREF**: PLL input frequency		12	30 (if internal oscillator is used) 50 (if external clock is used)	MHz
5	**PLLM**: PLL multiplier values	x20	x4	x32	
6	**PLLOUT**: PLL output frequency	N/A	300	600	MHz
7	**POSTDIV**: Post-divider value	/1	/1	/32	-

(1) The multiplier values must be chosen such that the PLL output frequency (at PLLOUT) is between 300 and 600 MHz, but the frequency going into the SYSCLK dividers (after the post divider) cannot exceed the maximum clock frequency defined for the device at a given voltage operating point.

5.6.2 Device Clock Generation

PLL0 is controlled by PLL Controller 0 and PLL1 is controlled by PLL Controller 1. PLLC0 and PLLC1 manage the clock ratios, alignment, and gating for the system clocks to the chip. The PLLCs are responsible for controlling all modes of the PLL through software, in terms of pre-division of the clock inputs (PLLC0 only), multiply factors within the PLLs, and post-division for each of the chip-level clocks from the PLLs outputs. PLLC0 also controls reset propagation through the chip, clock alignment, and test points.

PLLC0 provides clocks for the majority of the system but PLLC1 provides clocks to the mDDR/DDR2 Controller and the ASYNC3 clock domain to provide frequency scaling immunity to a defined set or peripherals. The ASYNC3 clock domain can either derive its clock from PLL1_SYSCLK2 (for frequency scaling immunity from PLL0) or from PLL0_SYSCLK2 (for synchronous timing with PLL0) depending on the application requirements. In addition, some peripherals have specific clock options independent of the ASYNC clock domain.

5.6.3 Dynamic Voltage and Frequency Scaling (DVFS)

The processor supports multiple operating points by scaling voltage and frequency to minimize power consumption for a given level of processor performance.

Frequency scaling is achieved by modifying the setting of the PLL controllers' multipliers, post-dividers (POSTDIV), and system clock dividers (SYSCLKn). Modification of the POSTDIV and SYSCLK values does not require relocking the PLL and provides lower latency to switch between operating points, but at the expense of the frequencies being limited by the integer divide values (only the divide values are altered the PLL multiplier is left unmodified). Non integer divide frequency values can be achieved by changing both the multiplier and the divide values, but when the PLL multiplier is changed the PLL must relock, incurring additional latency to change between operating points. Detailed information on modifying the PLL Controller settings can be found in the SMOMAPL138B Applications Processor System Reference Guide - SPRUGM7 .

 Copyright © 2011–2013, Texas Instruments Incorporated

Voltage scaling is enabled from outside the device by controlling an external voltage regulator. The processor may communicate with the regulator using GPIOs, I2C or some other interface. When switching between voltage-frequency operating points, the voltage must always support the desired frequency. When moving from a high-performance operating point to a lower performance operating point, the frequency should be lowered first followed by the voltage. When moving from a low-performance operating point to a higher performance operating point, the voltage should be raised first followed by the frequency. Voltage operating points refer to the CVdd voltage at that point. Other static supplies must be maintained at their nominal voltages at all operating points.

The maximum voltage slew rate for CVdd supply changes is 1 mV/us.

For additional information on power management solutions from TI for this processor, follow the Power Management link in the Product Folder on www.ti.com for this processor.

The processor supports multiple clock domains some of which have clock ratio requirements to each other. SYSCLK1:SYSCLK2:SYSCLK4:SYSCLK6 are synchronous to each other and the SYSCLKn dividers must always be configured such that the ratio between these domains is 1:2:4:1. The ASYNC and ASYNC3 clock domains are asynchronous to the other clock domains and have no specific ratio requirement.

The table below summarizes the maximum internal clock frequencies at each of the voltage operating points.

Table 5-5. Maximum Internal Clock Frequencies at Each Voltage Operating Point

CLOCK SOURCE	CLOCK DOMAIN		1.3V NOM	1.2V NOM	1.1V NOM	1.0V NOM
PLL0_SYSCLK1	DSP subsystem		456 MHz	375 MHz	200 MHz	100 MHz
PLL0_SYSCLK2	SYSCLK2 clock domain peripherals and optional clock source for ASYNC3 clock domain peripherals		228 MHz	187.5 MHz	100 MHz	50 MHz
PLL0_SYSCLK3	Optional clock for ASYNC1 clock domain (See ASYNC1 row)					
PLL0_SYSCLK4	SYSCLK4 domain peripherals		114 MHz	93.75 MHz	50 MHz	25 MHz
PLL0_SYSCLK5	Not used on this processor		-	-	-	-
PLL0_SYSCLK6	ARM subsystem		456 MHz	375 MHz	200 MHz	100 MHz
PLL0_SYSCLK7	Optional 50 MHz clock source for EMAC RMII interface		50 MHz	50 MHz	-	-
PLL1_SYSCLK1	DDR2/mDDR Interface clock source (memory interface clock is one-half of the value shown)		312 MHz	312 MHz	300 MHz	266 MHz
PLL1_SYSCLK2	Optional clock source for ASYNC3 clock domain peripherals		152 MHz	150 MHz	100 MHz	75 MHz
PLL1_SYSCLK3	Alternate clock source input to PLL Controller 0		50 MHz	50 MHz	50 MHz	50 MHz
McASP AUXCLK	Bypass clock source for the McASP		50 MHz	50 MHz	50 MHz	50 MHz
PLL0_AUXCLK	Bypass clock source for the USB0 and USB1		48 MHz	48 MHz	48 MHz	48 MHz
ASYNC1	ASYNC Clock Domain (EMIFA)	Async Mode	148 MHz	148 MHz	66.6 MHz	50 MHz
		SDRAM Mode	100 MHz	100 MHz	66.6 MHz	50 MHz
ASYNC2	ASYNC2 Clock Domain (multiple peripherals)		50 MHz	50 MHz	50 MHz	50 MHz
ASYNC3	ASYNC3 Clock Domain (multiple peripherals)		152 MHz	150 MHz	100 MHz	75 MHz

Some interfaces have specific limitations on supported modes/speeds at each operating point. See the corresponding peripheral sections of this document for more information.

TI provides software components (called the Power Manager) to perform DVFS and abstract the task from the user. The Power Manager controls changing operating points (both frequency and voltage) and handles the related tasks involved such as informing/controlling peripherals to provide graceful transitions between operating points. The Power Manager is bundled as a component of DSP/BIOS.

5.7 Interrupts

The device has a large number of interrupts to service the needs of its many peripherals and subsystems. Both the ARM and C674x CPUs are capable of servicing these interrupts equally. The interrupts can be selectively enabled or disabled in either of the controllers. Also, the ARM and DSP can communicate with each other through interrupts controlled by registers in the SYSCFG module.

5.7.1 ARM CPU Interrupts

The ARM9 CPU core supports 2 direct interrupts: FIQ and IRQ. The ARM Interrupt Controller (AINTC) extends the number of interrupts to 100, and provides features like programmable masking, priority, hardware nesting support, and interrupt vector generation.

5.7.1.1 ARM Interrupt Controller (AINTC) Interrupt Signal Hierarchy

The ARM Interrupt controller organizes interrupts into the following hierarchy:

- Peripheral Interrupt Requests
  - Individual Interrupt Sources from Peripherals
- 101 System Interrupts
  - One or more Peripheral Interrupt Requests are combined (fixed configuration) to generate a System Interrupt.
  - After prioritization, the AINTC will provide an interrupt vector based unique to each System Interrupt
- 32 Interrupt Channels
  - Each System Interrupt is mapped to one of the 32 Interrupt Channels
  - Channel Number determines the first level of prioritization, Channel 0 is highest priority and 31 lowest.
  - If more than one system interrupt is mapped to a channel, priority within the channel is determined by system interrupt number (0 highest priority)
- Host Interrupts (FIQ and IRQ)
  - Interrupt Channels 0 and 1 generate the ARM FIQ interrupt
  - Interrupt Channels 2 through 31 Generate the ARM IRQ interrupt
- Debug Interrupts
  - Two Debug Interrupts are supported and can be used to trigger events in the debug subsystem
  - Sources can be selected from any of the System Interrupts or Host Interrupts

5.7.1.2 AINTC Hardware Vector Generation

The AINTC also generates an interrupt vector in hardware for both IRQ and FIQ host interrupts. This may be used to accelerate interrupt dispatch. A unique vector is generated for each of the 100 system interrupts. The vector is computed in hardware as:

VECTOR = BASE + (SYSTEM INTERRUPT NUMBER × SIZE)

Where BASE and SIZE are programmable. The computed vector is a 32-bit address which may dispatched to using a single instruction of type LDR PC, [PC, #-<offset_12>] at the FIQ and IRQ vector locations (0xFFFF0018 and 0xFFFF001C respectively).

 Copyright © 2011–2013, Texas Instruments Incorporated

5.7.1.3 AINTC Hardware Interrupt Nesting Support

Interrupt nesting occurs when an interrupt service routine re-enables interrupts, to allow the CPU to interrupt the ISR if a higher priority event occurs. The AINTC provides hardware support to facilitate interrupt nesting. It supports both global and per host interrupt (FIQ and IRQ in this case) automatic nesting. If enabled, the AINTC will automatically update an internal nesting register that temporarily masks interrupts at and below the priority of the current interrupt channel. Then if the ISR re-enables interrupts; only higher priority channels will be able to interrupt it. The nesting level is restored by the ISR by writing to the nesting level register on completion. Support for nesting can be enabled/disabled by software, with the option of automatic nesting on a global or per host interrupt basis; or manual nesting.

5.7.1.4 AINTC System Interrupt Assignments

Table 5-6. AINTC System Interrupt Assignments

System Interrupt	Interrupt Name	Source
0	COMMTX	ARM
1	COMMRX	ARM
2	NINT	ARM
3	PRU_EVTOUT0	PRUSS Interrupt
4	PRU_EVTOUT1	PRUSS Interrupt
5	PRU_EVTOUT2	PRUSS Interrupt
6	PRU_EVTOUT3	PRUSS Interrupt
7	PRU_EVTOUT4	PRUSS Interrupt
8	PRU_EVTOUT5	PRUSS Interrupt
9	PRU_EVTOUT6	PRUSS Interrupt
10	PRU_EVTOUT7	PRUSS Interrupt
11	EDMA3_0_CC0_INT0	EDMA3_0 Channel Controller 0 Shadow Region 0 Transfer Completion Interrupt
12	EDMA3_0_CC0_ERRINT	EDMA3_0 Channel Controller 0 Error Interrupt
13	EDMA3_0_TC0_ERRINT	EDMA3_0 Transfer Controller 0 Error Interrupt
14	EMIFA_INT	EMIFA
15	IIC0_INT	I2C0
16	MMCSD0_INT0	MMCSD0 MMC/SD Interrupt
17	MMCSD0_INT1	MMCSD0 SDIO Interrupt
18	PSC0_ALLINT	PSC0
19	RTC_IRQS[1:0]	RTC
20	SPI0_INT	SPI0
21	T64P0_TINT12	Timer64P0 Interrupt 12
22	T64P0_TINT34	Timer64P0 Interrupt 34
23	T64P1_TINT12	Timer64P1 Interrupt 12
24	T64P1_TINT34	Timer64P1 Interrupt 34
25	UART0_INT	UART0
26	-	Reserved
27	PROTERR	SYSCFG Protection Shared Interrupt
28	SYSCFG_CHIPINT0	SYSCFG CHIPSIG Register
29	SYSCFG_CHIPINT1	SYSCFG CHIPSIG Register
30	SYSCFG_CHIPINT2	SYSCFG CHIPSIG Register
31	SYSCFG_CHIPINT3	SYSCFG CHIPSIG Register
32	EDMA3_0_TC1_ERRINT	EDMA3_0 Transfer Controller 1 Error Interrupt
33	EMAC_C0RXTHRESH	EMAC - Core 0 Receive Threshold Interrupt
34	EMAC_C0RX	EMAC - Core 0 Receive Interrupt

Table 5-6. AINTC System Interrupt Assignments (continued)

System Interrupt	Interrupt Name	Source
35	EMAC_C0TX	EMAC - Core 0 Transmit Interrupt
36	EMAC_C0MISC	EMAC - Core 0 Miscellaneous Interrupt
37	EMAC_C1RXTHRESH	EMAC - Core 1 Receive Threshold Interrupt
38	EMAC_C1RX	EMAC - Core 1 Receive Interrupt
39	EMAC_C1TX	EMAC - Core 1 Transmit Interrupt
40	EMAC_C1MISC	EMAC - Core 1 Miscellaneous Interrupt
41	DDR2_MEMERR	DDR2 Controller
42	GPIO_B0INT	GPIO Bank 0 Interrupt
43	GPIO_B1INT	GPIO Bank 1 Interrupt
44	GPIO_B2INT	GPIO Bank 2 Interrupt
45	GPIO_B3INT	GPIO Bank 3 Interrupt
46	GPIO_B4INT	GPIO Bank 4 Interrupt
47	GPIO_B5INT	GPIO Bank 5 Interrupt
48	GPIO_B6INT	GPIO Bank 6 Interrupt
49	GPIO_B7INT	GPIO Bank 7 Interrupt
50	GPIO_B8INT	GPIO Bank 8 Interrupt
51	IIC1_INT	I2C1
52	LCDC_INT	LCD Controller
53	UART_INT1	UART1
54	MCASP_INT	McASP0 Combined RX / TX Interrupts
55	PSC1_ALLINT	PSC1
56	SPI1_INT	SPI1
57	UHPI_ARMINT	UHPI ARM Interrupt
58	USB0_INT	USB0 Interrupt
59	USB1_HCINT	USB1 OHCI Host Controller Interrupt
60	USB1_RWAKEUP	USB1 Remote Wakeup Interrupt
61	UART2_INT	UART2
62	-	Reserved
63	EHRPWM0	HiResTimer / PWM0 Interrupt
64	EHRPWM0TZ	HiResTimer / PWM0 Trip Zone Interrupt
65	EHRPWM1	HiResTimer / PWM1 Interrupt
66	EHRPWM1TZ	HiResTimer / PWM1 Trip Zone Interrupt
67	SATA_INT	SATA Controller
68	T64P2_ALL	Timer64P2 - Combined TINT12 and TINT34
69	ECAP0	ECAP0
70	ECAP1	ECAP1
71	ECAP2	ECAP2
72	MMCSD1_INT0	MMCSD1 MMC/SD Interrupt
73	MMCSD1_INT1	MMCSD1 SDIO Interrupt
74	T64P2_CMPINT0	Timer64P2 - Compare 0
75	T64P2_CMPINT1	Timer64P2 - Compare 1
76	T64P2_CMPINT2	Timer64P2 - Compare 2
77	T64P2_CMPINT3	Timer64P2 - Compare 3
78	T64P2_CMPINT4	Timer64P2 - Compare 4
79	T64P2_CMPINT5	Timer64P2 - Compare 5
80	T64P2_CMPINT6	Timer64P2 - Compare 6
81	T64P2_CMPINT7	Timer64P2 - Compare 7

 Copyright © 2011–2013, Texas Instruments Incorporated

Table 5-6. AINTC System Interrupt Assignments (continued)

System Interrupt	Interrupt Name	Source
82	T64P3_CMPINT0	Timer64P3 - Compare 0
83	T64P3_CMPINT1	Timer64P3 - Compare 1
84	T64P3_CMPINT2	Timer64P3 - Compare 2
85	T64P3_CMPINT3	Timer64P3 - Compare 3
86	T64P3_CMPINT4	Timer64P3 - Compare 4
87	T64P3_CMPINT5	Timer64P3 - Compare 5
88	T64P3_CMPINT6	Timer64P3 - Compare 6
89	T64P3_CMPINT7	Timer64P3 - Compare 7
90	ARMCLKSTOPREQ	PSC0
91	uPP_ALLINT	uPP Combined Interrupt • Channel I End-of-Line Interrupt • Channel I End-of-Window Interrupt • Channel I DMA Access Interrupt • Channel I Overflow-Underrun Interrupt • Channel I DMA Programming Error Interrupt • Channel Q End-of-Line Interrupt • Channel Q End-of-Window Interrupt • Channel Q DMA Access Interrupt • Channel Q Overflow-Underrun Interrupt • Channel Q DMA Programming Error Interrupt
92	VPIF_ALLINT	VPIF Combined Interrupt • Channel 0 Frame Interrupt • Channel 1 Frame Interrupt • Channel 2 Frame Interrupt • Channel 3 Frame Interrupt • Error Interrupt
93	EDMA3_1_CC0_INT0	EDMA3_1 Channel Controller 0 Shadow Region 0 Transfer Completion Interrupt
94	EDMA3_1_CC0_ERRINT	EDMA3_1Channel Controller 0 Error Interrupt
95	EDMA3_1_TC0_ERRINT	EDMA3_1 Transfer Controller 0 Error Interrupt
96	T64P3_ALL	Timer64P 3 - Combined TINT12 and TINT34
97	MCBSP0_RINT	McBSP0 Receive Interrupt
98	MCBSP0_XINT	McBSP0 Transmit Interrupt
99	MCBSP1_RINT	McBSP1 Receive Interrupt
100	MCBSP1_XINT	McBSP1 Transmit Interrupt

Copyright © 2011–2013, Texas Instruments Incorporated

5.7.1.5 AINTC Memory Map

Table 5-7. AINTC Memory Map

BYTE ADDRESS	ACRONYM	DESCRIPTION
0xFFFE E000	REV	Revision Register
0xFFFE E004	CR	Control Register
0xFFFE E008 - 0xFFFE E00F	-	Reserved
0xFFFE E010	GER	Global Enable Register
0xFFFE E014 - 0xFFFE E01B	-	Reserved
0xFFFE E01C	GNLR	Global Nesting Level Register
0xFFFE E020	SISR	System Interrupt Status Indexed Set Register
0xFFFE E024	SICR	System Interrupt Status Indexed Clear Register
0xFFFE E028	EISR	System Interrupt Enable Indexed Set Register
0xFFFE E02C	EICR	System Interrupt Enable Indexed Clear Register
0xFFFE E030	-	Reserved
0xFFFE E034	HIEISR	Host Interrupt Enable Indexed Set Register
0xFFFE E038	HIEICR	Host Interrupt Enable Indexed Clear Register
0xFFFE E03C - 0xFFFE E04F	-	Reserved
0xFFFE E050	VBR	Vector Base Register
0xFFFE E054	VSR	Vector Size Register
0xFFFE E058	VNR	Vector Null Register
0xFFFE E05C - 0xFFFE E07F	-	Reserved
0xFFFE E080	GPIR	Global Prioritized Index Register
0xFFFE E084	GPVR	Global Prioritized Vector Register
0xFFFE E088 - 0xFFFE E1FF	-	Reserved
0xFFFE E200	SRSR[1]	System Interrupt Status Raw / Set Registers
0xFFFE E204	SRSR[2]	
0xFFFE E208	SRSR[3]	
0xFFFE E20C	SRSR[4]	
0xFFFE E210- 0xFFFE E27F	-	Reserved
0xFFFE E280	SECR[1]	System Interrupt Status Enabled / Clear Registers
0xFFFE E284	SECR[2]	
0xFFFE E288	SECR[3]	
0xFFFE E28C	SECR[4]	
0xFFFE E290 - 0xFFFE E2FF	-	Reserved
0xFFFE E300	ESR[1]	System Interrupt Enable Set Registers
0xFFFE E304	ESR[2]	
0xFFFE E308	ESR[3]	
0xFFFE E30C	ESR[4]	
0xFFFE E310 - 0xFFFE E37F	-	Reserved
0xFFFE E380	ECR[1]	System Interrupt Enable Clear Registers
0xFFFE E384	ECR[2]	
0xFFFE E388	ECR[3]	
0xFFFE E38C	ECR[4]	
0xFFFE E390 - 0xFFFE E3FF	-	Reserved

 Copyright © 2011–2013, Texas Instruments Incorporated

Table 5-7. AINTC Memory Map (continued)

BYTE ADDRESS	ACRONYM	DESCRIPTION
0xFFFE E400 - 0xFFFE E45B	CMR[0]	Channel Map Registers
0xFFFE E404	CMR[1]	
0xFFFE E408	CMR[2]	
0xFFFE E40C	CMR[3]	
0xFFFE E410	CMR[4]	
0xFFFE E414	CMR[5]	
0xFFFE E418	CMR[6]	
0xFFFE E41C	CMR[7]	
0xFFFE E420	CMR[8]	
0xFFFE E424	CMR[9]	
0xFFFE E428	CMR[10]	
0xFFFE E42C	CMR[11]	
0xFFFE E430	CMR[12]	
0xFFFE E434	CMR[13]	
0xFFFE E438	CMR[14]	
0xFFFE E43C	CMR[15]	
0xFFFE E440	CMR[16]	
0xFFFE E444	CMR[17]	
0xFFFE E448	CMR[18]	
0xFFFE E44C	CMR[19]	
0xFFFE E450	CMR[20]	
0xFFFE E454	CMR[21]	
0xFFFE E458	CMR[22]	
0xFFFE E45C	CMR[23]	
0xFFFE E460	CMR[24]	
0xFFFE E464	CMR[25]	
0xFFFE E468 - 0xFFFE E8FF	-	Reserved
0xFFFE E900	HIPIR[1]	Host Interrupt Prioritized Index Registers
0xFFFE E904	HIPIR[2]	
0xFFFE E908 - 0xFFFE F0FF	-	Reserved
0xFFFE F100	HINLR[1]	Host Interrupt Nesting Level Registers
0xFFFE F104	HINLR[2]	
0xFFFE F108 - 0xFFFE F4FF	-	Reserved
0xFFFE F500	HIER	Host Interrupt Enable Register
0xFFFE F504 - 0xFFFE F5FF	-	Reserved
0xFFFE F600	HIPVR[1]	Host Interrupt Prioritized Vector Registers
0xFFFE F604	HIPVR[2]	
0xFFFE F608 - 0xFFFE FFFF	-	Reserved

5.7.2 DSP Interrupts

The C674x DSP interrupt controller combines device events into 12 prioritized interrupts. The source for each of the 12 CPU interrupts is user programmable and is listed in Table 5-8. Also, the interrupt controller controls the generation of the CPU exceptions, NMI, and emulation interrupts. Table 5-9 summarizes the C674x interrupt controller registers and memory locations.

Table 5-8. SMOMAPL138B DSP Interrupts

EVT#	Interrupt Name	Source
0	EVT0	C674x Int Ctl 0
1	EVT1	C674x Int Ctl 1
2	EVT2	C674x Int Ctl 2
3	EVT3	C674x Int Ctl 3
4	T64P0_TINT12	Timer64P0 - TINT12
5	SYSCFG_CHIPINT2	SYSCFG CHIPSIG Register
6	PRU_EVTOUT0	PRUSS Interrupt
7	EHRPWM0	HiResTimer/PWM0 Interrupt
8	EDMA3_0_CC0_INT1	EDMA3_0 Channel Controller 0 Shadow Region 1 Transfer Completion Interrupt
9	EMU_DTDMA	C674x-ECM
10	EHRPWM0TZ	HiResTimer/PWM0 Trip Zone Interrupt
11	EMU_RTDXRX	C674x-RTDX
12	EMU_RTDXTX	C674x-RTDX
13	IDMAINT0	C674x-EMC
14	IDMAINT1	C674x-EMC
15	MMCSD0_INT0	MMCSD0 MMC/SD Interrupt
16	MMCSD0_INT1	MMCSD0 SDIO Interrupt
17	PRU_EVTOUT1	PRUSS Interrupt
18	EHRPWM1	HiResTimer/PWM1 Interrupt
19	USB0_INT	USB0 Interrupt
20	USB1_HCINT	USB1 OHCI Host Controller Interrupt
21	USB1_RWAKEUP	USB1 Remote Wakeup Interrupt
22	PRU_EVTOUT2	PRUSS Interrupt
23	EHRPWM1TZ	HiResTimer/PWM1 Trip Zone Interrupt
24	SATA_INT	SATA Controller
25	T64P2_TINTALL	Timer64P2 Combined TINT12 and TINT 34 Interrupt
26	EMAC_C0RXTHRESH	EMAC - Core 0 Receive Threshold Interrupt
27	EMAC_C0RX	EMAC - Core 0 Receive Interrupt
28	EMAC_C0TX	EMAC - Core 0 Transmit Interrupt
29	EMAC_C0MISC	EMAC - Core 0 Miscellaneous Interrupt
30	EMAC_C1RXTHRESH	EMAC - Core 1 Receive Threshold Interrupt
31	EMAC_C1RX	EMAC - Core 1 Receive Interrupt
32	EMAC_C1TX	EMAC - Core 1 Transmit Interrupt
33	EMAC_C1MISC	EMAC - Core 1 Miscellaneous Interrupt
34	UHPI_DSPINT	UHPI DSP Interrupt
35	PRU_EVTOUT3	PRUSS Interrupt
36	IIC0_INT	I2C0
37	SP0_INT	SPI0
38	UART0_INT	UART0
39	PRU_EVTOUT5	PRUSS Interrupt
40	T64P1_TINT12	Timer64P1 Interrupt 12
41	GPIO_B1INT	GPIO Bank 1 Interrupt
42	IIC1_INT	I2C1
43	SPI1_INT	SPI1
44	PRU_EVTOUT6	PRUSS Interrupt
45	ECAP0	ECAP0

Copyright © 2011–2013, Texas Instruments Incorporated

Table 5-8. SMOMAPL138B DSP Interrupts (continued)

EVT#	Interrupt Name	Source
46	UART_INT1	UART1
47	ECAP1	ECAP1
48	T64P1_TINT34	Timer64P1 Interrupt 34
49	GPIO_B2INT	GPIO Bank 2 Interrupt
50	PRU_EVTOUT7	PRUSS Interrupt
51	ECAP2	ECAP2
52	GPIO_B3INT	GPIO Bank 3 Interrupt
53	MMCSD1_INT1	MMCSD1 SDIO Interrupt
54	GPIO_B4INT	GPIO Bank 4 Interrupt
55	EMIFA_INT	EMIFA
56	EDMA3_0_CC0_ERRINT	EDMA3_0 Channel Controller 0 Error Interrupt
57	EDMA3_0_TC0_ERRINT	EDMA3_0 Transfer Controller 0 Error Interrupt
58	EDMA3_0_TC1_ERRINT	EDMA3_0 Transfer Controller 1 Error Interrupt
59	GPIO_B5INT	GPIO Bank 5 Interrupt
60	DDR2_MEMERR	DDR2 Memory Error Interrupt
61	MCASP0_INT	McASP0 Combined RX/TX Interrupts
62	GPIO_B6INT	GPIO Bank 6 Interrupt
63	RTC_IRQS	RTC Combined
64	T64P0_TINT34	Timer64P0 Interrupt 34
65	GPIO_B0INT	GPIO Bank 0 Interrupt
66	PRU_EVTOUT4	PRUSS Interrupt
67	SYSCFG_CHIPINT3	SYSCFG_CHIPSIG Register
68	MMCSD1_INT0	MMCSD1 MMC/SD Interrupt
69	UART2_INT	UART2
70	PSC0_ALLINT	PSC0
71	PSC1_ALLINT	PSC1
72	GPIO_B7INT	GPIO Bank 7 Interrupt
73	LCDC_INT	LDC Controller
74	PROTERR	SYSCFG Protection Shared Interrupt
75	GPIO_B8INT	GPIO Bank 8 Interrupt
76 - 77	-	Reserved
78	T64P2_CMPINT0	Timer64P2 - Compare Interrupt 0
79	T64P2_CMPINT1	Timer64P2 - Compare Interrupt 1
80	T64P2_CMPINT2	Timer64P2 - Compare Interrupt 2
81	T64P2_CMPINT3	Timer64P2 - Compare Interrupt 3
82	T64P2_CMPINT4	Timer64P2 - Compare Interrupt 4
83	T64P2_CMPINT5	Timer64P2 - Compare Interrupt 5
84	T64P2_CMPINT6	Timer64P2 - Compare Interrupt 6
85	T64P2_CMPINT7	Timer64P2 - Compare Interrupt 7
86	T64P3_TINTALL	Timer64P3 Combined TINT12 and TINT 34 Interrupt
87	MCBSP0_RINT	McBSP0 Receive Interrupt
88	MCBSP0_XINT	McBSP0 Transmit Interrupt
89	MCBSP1_RINT	McBSP1 Receive Interrupt
90	MCBSP1_XINT	McBSP1 Transmit Interrupt
91	EDMA3_1_CC0_INT1	EDMA3_1 Channel Controller 0 Shadow Region 1 Transfer Completion Interrupt
92	EDMA3_1_CC0_ERRINT	EDMA3_1 Channel Controller 0 Error Interrupt
93	EDMA3_1_TC0_ERRINT	EDMA3_1 Transfer Controller 0 Error Interrupt

Copyright © 2011–2013, Texas Instruments Incorporated

Table 5-8. SMOMAPL138B DSP Interrupts (continued)

EVT#	Interrupt Name	Source
94	UPP_INT	uPP Combined Interrupt
95	VPIF_INT	VPIF Combined Interrupt
96	INTERR	C674x-Int Ctl
97	EMC_IDMAERR	C674x-EMC
98 - 112	-	Reserved
113	PMC_ED	C674x-PMC
114 - 115	-	Reserved
116	UMC_ED1	C674x-UMC
117	UMC_ED2	C674x-UMC
118	PDC_INT	C674x-PDC
119	SYS_CMPA	C674x-SYS
120	PMC_CMPA	C674x-PMC
121	PMC_CMPA	C674x-PMC
122	DMC_CMPA	C674x-DMC
123	DMC_CMPA	C674x-DMC
124	UMC_CMPA	C674x-UMC
125	UMC_CMPA	C674x-UMC
126	EMC_CMPA	C674x-EMC
127	EMC_BUSERR	C674x-EMC

Copyright © 2011–2013, Texas Instruments Incorporated

Table 5-9. C674x DSP Interrupt Controller Registers

BYTE ADDRESS	ACRONYM	DESCRIPTION
0x0180 0000	EVTFLAG0	Event flag register 0
0x0180 0004	EVTFLAG1	Event flag register 1
0x0180 0008	EVTFLAG2	Event flag register 2
0x0180 000C	EVTFLAG3	Event flag register 3
0x0180 0020	EVTSET0	Event set register 0
0x0180 0024	EVTSET1	Event set register 1
0x0180 0028	EVTSET2	Event set register 2
0x0180 002C	EVTSET3	Event set register 3
0x0180 0040	EVTCLR0	Event clear register 0
0x0180 0044	EVTCLR1	Event clear register 1
0x0180 0048	EVTCLR2	Event clear register 2
0x0180 004C	EVTCLR3	Event clear register 3
0x0180 0080	EVTMASK0	Event mask register 0
0x0180 0084	EVTMASK1	Event mask register 1
0x0180 0088	EVTMASK2	Event mask register 2
0x0180 008C	EVTMASK3	Event mask register 3
0x0180 00A0	MEVTFLAG0	Masked event flag register 0
0x0180 00A4	MEVTFLAG1	Masked event flag register 1
0x0180 00A8	MEVTFLAG2	Masked event flag register 2
0x0180 00AC	MEVTFLAG3	Masked event flag register 3
0x0180 00C0	EXPMASK0	Exception mask register 0
0x0180 00C4	EXPMASK1	Exception mask register 1
0x0180 00C8	EXPMASK2	Exception mask register 2
0x0180 00CC	EXPMASK3	Exception mask register 3
0x0180 00E0	MEXPFLAG0	Masked exception flag register 0
0x0180 00E4	MEXPFLAG1	Masked exception flag register 1
0x0180 00E8	MEXPFLAG2	Masked exception flag register 2
0x0180 00EC	MEXPFLAG3	Masked exception flag register 3
0x0180 0104	INTMUX1	Interrupt mux register 1
0x0180 0108	INTMUX2	Interrupt mux register 2
0x0180 010C	INTMUX3	Interrupt mux register 3
0x0180 0140 - 0x0180 0144	-	Reserved
0x0180 0180	INTXSTAT	Interrupt exception status
0x0180 0184	INTXCLR	Interrupt exception clear
0x0180 0188	INTDMASK	Dropped interrupt mask register
0x0180 01C0	EVTASRT	Event assert register

5.8 Power and Sleep Controller (PSC)

The Power and Sleep Controllers (PSC) are responsible for managing transitions of system power on/off, clock on/off, resets (device level and module level). It is used primarily to provide granular power control for on chip modules (peripherals and CPU). A PSC module consists of a Global PSC (GPSC) and a set of Local PSCs (LPSCs). The GPSC contains memory mapped registers, PSC interrupts, a state machine for each peripheral/module it controls. An LPSC is associated with every module that is controlled by the PSC and provides clock and reset control.

The PSC includes the following features:

- Provides a software interface to:
  - Control module clock enable/disable
  - Control module reset
  - Control CPU local reset
- Supports IcePick emulation features: power, clock and reset

  PSC0 controls 16 local PSCs.

  PSC1 controls 32 local PSCs.

Table 5-10. Power and Sleep Controller (PSC) Registers

PSC0 BYTE ADDRESS	PSC1 BYTE ADDRESS	ACRONYM	REGISTER DESCRIPTION
0x01C1 0000	0x01E2 7000	REVID	Peripheral Revision and Class Information Register
0x01C1 0018	0x01E2 7018	INTEVAL	Interrupt Evaluation Register
0x01C1 0040	0x01E2 7040	MERRPR0	Module Error Pending Register 0 (module 0-15) (PSC0) Module Error Pending Register 0 (module 0-31) (PSC1)
0x01C1 0050	0x01E2 7050	MERRCR0	Module Error Clear Register 0 (module 0-15) (PSC0) Module Error Clear Register 0 (module 0-31) (PSC1)
0x01C1 0060	0x01E2 7060	PERRPR	Power Error Pending Register
0x01C1 0068	0x01E2 7068	PERRCR	Power Error Clear Register
0x01C1 0120	0x01E2 7120	PTCMD	Power Domain Transition Command Register
0x01C1 0128	0x01E2 7128	PTSTAT	Power Domain Transition Status Register
0x01C1 0200	0x01E2 7200	PDSTAT0	Power Domain 0 Status Register
0x01C1 0204	0x01E2 7204	PDSTAT1	Power Domain 1 Status Register
0x01C1 0300	0x01E2 7300	PDCTL0	Power Domain 0 Control Register
0x01C1 0304	0x01E2 7304	PDCTL1	Power Domain 1 Control Register
0x01C1 0400	0x01E2 7400	PDCFG0	Power Domain 0 Configuration Register
0x01C1 0404	0x01E2 7404	PDCFG1	Power Domain 1 Configuration Register
0x01C1 0800	0x01E2 7800	MDSTAT0	Module 0 Status Register
0x01C1 0804	0x01E2 7804	MDSTAT1	Module 1 Status Register
0x01C1 0808	0x01E2 7808	MDSTAT2	Module 2 Status Register
0x01C1 080C	0x01E2 780C	MDSTAT3	Module 3 Status Register
0x01C1 0810	0x01E2 7810	MDSTAT4	Module 4 Status Register
0x01C1 0814	0x01E2 7814	MDSTAT5	Module 5 Status Register
0x01C1 0818	0x01E2 7818	MDSTAT6	Module 6 Status Register
0x01C1 081C	0x01E2 781C	MDSTAT7	Module 7 Status Register
0x01C1 0820	0x01E2 7820	MDSTAT8	Module 8 Status Register
0x01C1 0824	0x01E2 7824	MDSTAT9	Module 9 Status Register
0x01C1 0828	0x01E2 7828	MDSTAT10	Module 10 Status Register
0x01C1 082C	0x01E2 782C	MDSTAT11	Module 11 Status Register
0x01C1 0830	0x01E2 7830	MDSTAT12	Module 12 Status Register
0x01C1 0834	0x01E2 7834	MDSTAT13	Module 13 Status Register

Copyright © 2011–2013, Texas Instruments Incorporated

Table 5-10. Power and Sleep Controller (PSC) Registers (continued)

PSC0 BYTE ADDRESS	PSC1 BYTE ADDRESS	ACRONYM	REGISTER DESCRIPTION
0x01C1 0838	0x01E2 7838	MDSTAT14	Module 14 Status Register
0x01C1 083C	0x01E2 783C	MDSTAT15	Module 15 Status Register
-	0x01E2 7840	MDSTAT16	Module 16 Status Register
-	0x01E2 7844	MDSTAT17	Module 17 Status Register
-	0x01E2 7848	MDSTAT18	Module 18 Status Register
-	0x01E2 784C	MDSTAT19	Module 19 Status Register
-	0x01E2 7850	MDSTAT20	Module 20 Status Register
-	0x01E2 7854	MDSTAT21	Module 21 Status Register
-	0x01E2 7858	MDSTAT22	Module 22 Status Register
-	0x01E2 785C	MDSTAT23	Module 23 Status Register
-	0x01E2 7860	MDSTAT24	Module 24 Status Register
-	0x01E2 7864	MDSTAT25	Module 25 Status Register
-	0x01E2 7868	MDSTAT26	Module 26 Status Register
-	0x01E2 786C	MDSTAT27	Module 27 Status Register
-	0x01E2 7870	MDSTAT28	Module 28 Status Register
-	0x01E2 7874	MDSTAT29	Module 29 Status Register
-	0x01E2 7878	MDSTAT30	Module 30 Status Register
-	0x01E2 787C	MDSTAT31	Module 31 Status Register
0x01C1 0A00	0x01E2 7A00	MDCTL0	Module 0 Control Register
0x01C1 0A04	0x01E2 7A04	MDCTL1	Module 1 Control Register
0x01C1 0A08	0x01E2 7A08	MDCTL2	Module 2 Control Register
0x01C1 0A0C	0x01E2 7A0C	MDCTL3	Module 3 Control Register
0x01C1 0A10	0x01E2 7A10	MDCTL4	Module 4 Control Register
0x01C1 0A14	0x01E2 7A14	MDCTL5	Module 5 Control Register
0x01C1 0A18	0x01E2 7A18	MDCTL6	Module 6 Control Register
0x01C1 0A1C	0x01E2 7A1C	MDCTL7	Module 7 Control Register
0x01C1 0A20	0x01E2 7A20	MDCTL8	Module 8 Control Register
0x01C1 0A24	0x01E2 7A24	MDCTL9	Module 9 Control Register
0x01C1 0A28	0x01E2 7A28	MDCTL10	Module 10 Control Register
0x01C1 0A2C	0x01E2 7A2C	MDCTL11	Module 11 Control Register
0x01C1 0A30	0x01E2 7A30	MDCTL12	Module 12 Control Register
0x01C1 0A34	0x01E2 7A34	MDCTL13	Module 13 Control Register
0x01C1 0A38	0x01E2 7A38	MDCTL14	Module 14 Control Register
0x01C1 0A3C	0x01E2 7A3C	MDCTL15	Module 15 Control Register
-	0x01E2 7A40	MDCTL16	Module 16 Control Register
-	0x01E2 7A44	MDCTL17	Module 17 Control Register
-	0x01E2 7A48	MDCTL18	Module 18 Control Register
-	0x01E2 7A4C	MDCTL19	Module 19 Control Register
-	0x01E2 7A50	MDCTL20	Module 20 Control Register
-	0x01E2 7A54	MDCTL21	Module 21 Control Register
-	0x01E2 7A58	MDCTL22	Module 22 Control Register
-	0x01E2 7A5C	MDCTL23	Module 23 Control Register
-	0x01E2 7A60	MDCTL24	Module 24 Control Register
-	0x01E2 7A64	MDCTL25	Module 25 Control Register
-	0x01E2 7A68	MDCTL26	Module 26 Control Register
-	0x01E2 7A6C	MDCTL27	Module 27 Control Register
-	0x01E2 7A70	MDCTL28	Module 28 Control Register

Copyright © 2011–2013, Texas Instruments Incorporated

Table 5-10. Power and Sleep Controller (PSC) Registers (continued)

PSC0 BYTE ADDRESS	PSC1 BYTE ADDRESS	ACRONYM	REGISTER DESCRIPTION
-	0x01E2 7A74	MDCTL29	Module 29 Control Register
-	0x01E2 7A78	MDCTL30	Module 30 Control Register
-	0x01E2 7A7C	MDCTL31	Module 31 Control Register

5.8.1 Power Domain and Module Topology

The device includes two PSC modules.

Each PSC module controls clock states for several of the on chip modules, controllers and interconnect components. Table 5-11 and Table 5-12 lists the set of peripherals/modules that are controlled by the PSC, the power domain they are associated with, the LPSC assignment and the default (power-on reset) module states. The module states and terminology are defined in Section 5.8.1.2.

Table 5-11. PSC0 Default Module Configuration

LPSC Number	Module Name	Power Domain	Default Module State	Auto Sleep/Wake Only
0	EDMA3 Channel Controller 0	AlwaysON (PD0)	SwRstDisable	—
1	EDMA3 Transfer Controller 0	AlwaysON (PD0)	SwRstDisable	—
2	EDMA3 Transfer Controller 1	AlwaysON (PD0)	SwRstDisable	—
3	EMIFA (Br7)	AlwaysON (PD0)	SwRstDisable	—
4	SPI 0	AlwaysON (PD0)	SwRstDisable	—
5	MMC/SD 0	AlwaysON (PD0)	SwRstDisable	—
6	ARM Interrupt Controller	AlwaysON (PD0)	SwRstDisable	—
7	ARM RAM/ROM	AlwaysON (PD0)	Enable	Yes
8	—	—	—	—
9	UART 0	AlwaysON (PD0)	SwRstDisable	—
10	SCR0 (Br 0, Br 1, Br 2, Br 8)	AlwaysON (PD0)	Enable	Yes
11	SCR1 (Br 4)	AlwaysON (PD0)	Enable	Yes
12	SCR2 (Br 3, Br 5, Br 6)	AlwaysON (PD0)	Enable	Yes
13	PRUSS	AlwaysON (PD0)	SwRstDisable	—
14	ARM	AlwaysON (PD0)	SwRstDisable	—
15	DSP	PD_DSP (PD1)	Enable	—

Copyright © 2011–2013, Texas Instruments Incorporated

Table 5-12. PSC1 Default Module Configuration

LPSC Number	Module Name	Power Domain	Default Module State	Auto Sleep/Wake Only
0	EDMA3 Channel Controller 1	AlwaysON (PD0)	SwRstDisable	—
1	USB0 (USB2.0)	AlwaysON (PD0)	SwRstDisable	—
2	USB1 (USB1.1)	AlwaysON (PD0)	SwRstDisable	—
3	GPIO	AlwaysON (PD0)	SwRstDisable	—
4	UHPI	AlwaysON (PD0)	SwRstDisable	—
5	EMAC	AlwaysON (PD0)	SwRstDisable	—
6	DDR2 (and SCR_F3)	AlwaysON (PD0)	SwRstDisable	—
7	McASP0 (+ McASP0 FIFO)	AlwaysON (PD0)	SwRstDisable	—
8	SATA	AlwaysON (PD0)	SwRstDisable	—
9	VPIF	AlwaysON (PD0)	SwRstDisable	—
10	SPI 1	AlwaysON (PD0)	SwRstDisable	—
11	I2C 1	AlwaysON (PD0)	SwRstDisable	—
12	UART 1	AlwaysON (PD0)	SwRstDisable	—
13	UART 2	AlwaysON (PD0)	SwRstDisable	—
14	McBSP0 (+ McBSP0 FIFO)	AlwaysON (PD0)	SwRstDisable	—
15	McBSP1 (+ McBSP1 FIFO)	AlwaysON (PD0)	SwRstDisable	—
16	LCDC	AlwaysON (PD0)	SwRstDisable	—
17	eHRPWM0/1	AlwaysON (PD0)	SwRstDisable	—
18	MMCSD1	AlwaysON (PD0)	SwRstDisable	—
19	uPP	AlwaysON (PD0)	SwRstDisable	—
20	ECAP0/1/2	AlwaysON (PD0)	SwRstDisable	—
21	EDMA3 Transfer Controller 2	AlwaysON (PD0)	SwRstDisable	—
22	—	—	—	—
23	—	—	—	—
24	SCR_F0 (and bridge F0)	AlwaysON (PD0)	Enable	Yes
25	SCR_F1 (and bridge F1)	AlwaysON (PD0)	Enable	Yes
26	SCR_F2 (and bridge F2)	AlwaysON (PD0)	Enable	Yes
27	SCR_F6 (and bridge F3)	AlwaysON (PD0)	Enable	Yes
28	SCR_F7 (and bridge F4)	AlwaysON (PD0)	Enable	Yes
29	SCR_F8 (and bridge F5)	AlwaysON (PD0)	Enable	Yes
30	Bridge F7 (DDR Controller path)	AlwaysON (PD0)	Enable	Yes
31	Shared RAM (including SCR_F4 and bridge F6)	PD_SHRAM	Enable	—

Copyright © 2011–2013, Texas Instruments Incorporated

5.8.1.1 Power Domain States

A power domain can only be in one of the two states: ON or OFF, defined as follows:

- ON: power to the domain is on
- OFF: power to the domain is off

For both PSC0 and PSC1, the Always ON domain, or PD0 power domain, is always in the ON state when the chip is powered-on. This domain is not programmable to OFF state.

- On PSC0 PD1/PD_DSP Domain: Controls the sleep state for DSP L1 and L2 Memories
- On PSC1 PD1/PD_SHRAM Domain: Controls the sleep state for the 128K Shared RAM

5.8.1.2 Module States

The PSC defines several possible states for a module. This states are essentially a combination of the module reset asserted or de-asserted and module clock on/enabled or off/disabled. The module states are defined in Table 5-13.

Table 5-13. Module States

Module State	Module Reset	Module Clock	Module State Definition
Enable	De-asserted	On	A module in the enable state has its module reset de-asserted and it has its clock on. This is the normal operational state for a given module
Disable	De-asserted	Off	A module in the disabled state has its module reset de-asserted and it has its module clock off. This state is typically used for disabling a module clock to save power. The device is designed in full static CMOS, so when you stop a module clock, it retains the module's state. When the clock is restarted, the module resumes operating from the stopping point.
SyncReset	Asserted	On	A module state in the SyncReset state has its module reset asserted and it has its clock on. Generally, software is not expected to initiate this state
SwRstDisable	Asserted	Off	A module in the SwResetDisable state has its module reset asserted and it has its clock disabled. After initial power-on, several modules come up in the SwRstDisable state. Generally, software is not expected to initiate this state
Auto Sleep	De-asserted	Off	A module in the Auto Sleep state also has its module reset de-asserted and its module clock disabled, similar to the Disable state. However this is a special state, once a module is configured in this state by software, it can "automatically" transition to "Enable" state whenever there is an internal read/write request made to it, and after servicing the request it will "automatically" transition into the sleep state (with module reset re de-asserted and module clock disabled), without any software intervention. The transition from sleep to enabled and back to sleep state has some cycle latency associated with it. It is not envisioned to use this mode when peripherals are fully operational and moving data.
Auto Wake	De-asserted	Off	A module in the Auto Wake state also has its module reset de-asserted and its module clock disabled, similar to the Disable state. However this is a special state, once a module is configured in this state by software, it will "automatically" transition to "Enable" state whenever there is an internal read/write request made to it, and will remain in the "Enabled" state from then on (with module reset re de-asserted and module clock on), without any software intervention. The transition from sleep to enabled state has some cycle latency associated with it. It is not envisioned to use this mode when peripherals are fully operational and moving data.

 Copyright © 2011–2013, Texas Instruments Incorporated

5.9 EDMA

The EDMA controller handles all data transfers between memories and the device slave peripherals on the device. These data transfers include cache servicing, non-cacheable memory accesses, user-programmed data transfers, and host accesses.

5.9.1 EDMA3 Channel Synchronization Events

Each EDMA channel controller supports up to 32 channels which service peripherals and memory. Table 5-14 lists the source of the EDMA synchronization events associated with each of the programmable EDMA channels.

Table 5-14. EDMA Synchronization Events

EDMA0 Channel Controller 0			
Event	**Event Name / Source**	**Event**	**Event Name / Source**
0	McASP0 Receive	16	MMCSD0 Receive
1	McASP0 Transmit	17	MMCSD0 Transmit
2	McBSP0 Receive	18	SPI1 Receive
3	McBSP0 Transmit	19	SPI1 Transmit
4	McBSP1 Receive	20	PRU_EVTOUT6
5	McBSP1 Transmit	21	PRU_EVTOUT7
6	GPIO Bank 0 Interrupt	22	GPIO Bank 2 Interrupt
7	GPIO Bank 1 Interrupt	23	GPIO Bank 3 Interrupt
8	UART0 Receive	24	I2C0 Receive
9	UART0 Transmit	25	I2C0 Transmit
10	Timer64P0 Event Out 12	26	I2C1 Receive
11	Timer64P0 Event Out 34	27	I2C1 Transmit
12	UART1 Receive	28	GPIO Bank 4 Interrupt
13	UART1 Transmit	29	GPIO Bank 5 Interrupt
14	SPI0 Receive	30	UART2 Receive
15	SPI0 Transmit	31	UART2 Transmit
EDMA1 Channel Controller 1			
Event	Event Name / Source	Event	Event Name / Source
0	Timer64P2 Compare Event 0	16	GPIO Bank 6 Interrupt
1	Timer64P2 Compare Event 1	17	GPIO Bank 7 Interrupt
2	Timer64P2 Compare Event 2	18	GPIO Bank 8 Interrupt
3	Timer64P2 Compare Event 3	19	Reserved
4	Timer64P2 Compare Event 4	20	Reserved
5	Timer64P2 Compare Event 5	21	Reserved
6	Timer64P2 Compare Event 6	22	Reserved
7	Timer64P2 Compare Event 7	23	Reserved
8	Timer64P3 Compare Event 0	24	Timer64P2 Event Out 12
9	Timer64P3 Compare Event 1	25	Timer64P2 Event Out 34
10	Timer64P3 Compare Event 2	26	Timer64P3 Event Out 12
11	Timer64P3 Compare Event 3	27	Timer64P3 Event Out 34
12	Timer64P3 Compare Event 4	28	MMCSD1 Receive
13	Timer64P3 Compare Event 5	29	MMCSD1 Transmit
14	Timer64P3 Compare Event 6	30	Reserved
15	Timer64P3 Compare Event 7	31	Reserved

Copyright © 2011–2013, Texas Instruments Incorporated

5.9.2 EDMA Peripheral Register Descriptions

Table 5-15 is the list of EDMA3 Channel Controller Registers and Table 5-16 is the list of EDMA3 Transfer Controller registers.

Table 5-15. EDMA3 Channel Controller (EDMA3CC) Registers

EDMA0 Channel Controller 0 BYTE ADDRESS	EDMA1 Channel Controller 0 BYTE ADDRESS	ACRONYM	REGISTER DESCRIPTION
0x01C0 0000	0x01E3 0000	PID	Peripheral Identification Register
0x01C0 0004	0x01E3 0004	CCCFG	EDMA3CC Configuration Register
Global Registers			
0x01C0 0200	0x01E3 0200	QCHMAP0	QDMA Channel 0 Mapping Register
0x01C0 0204	0x01E3 0204	QCHMAP1	QDMA Channel 1 Mapping Register
0x01C0 0208	0x01E3 0208	QCHMAP2	QDMA Channel 2 Mapping Register
0x01C0 020C	0x01E3 020C	QCHMAP3	QDMA Channel 3 Mapping Register
0x01C0 0210	0x01E3 0210	QCHMAP4	QDMA Channel 4 Mapping Register
0x01C0 0214	0x01E3 0214	QCHMAP5	QDMA Channel 5 Mapping Register
0x01C0 0218	0x01E3 0218	QCHMAP6	QDMA Channel 6 Mapping Register
0x01C0 021C	0x01E3 021C	QCHMAP7	QDMA Channel 7 Mapping Register
0x01C0 0240	0x01E3 0240	DMAQNUM0	DMA Channel Queue Number Register 0
0x01C0 0244	0x01E3 0244	DMAQNUM1	DMA Channel Queue Number Register 1
0x01C0 0248	0x01E3 0248	DMAQNUM2	DMA Channel Queue Number Register 2
0x01C0 024C	0x01E3 024C	DMAQNUM3	DMA Channel Queue Number Register 3
0x01C0 0260	0x01E3 0260	QDMAQNUM	QDMA Channel Queue Number Register
0x01C0 0284	0x01E3 0284	QUEPRI	Queue Priority Register(1)
0x01C0 0300	0x01E3 0300	EMR	Event Missed Register
0x01C0 0308	0x01E3 0308	EMCR	Event Missed Clear Register
0x01C0 0310	0x01E3 0310	QEMR	QDMA Event Missed Register
0x01C0 0314	0x01E3 0314	QEMCR	QDMA Event Missed Clear Register
0x01C0 0318	0x01E3 0318	CCERR	EDMA3CC Error Register
0x01C0 031C	0x01E3 031C	CCERRCLR	EDMA3CC Error Clear Register
0x01C0 0320	0x01E3 0320	EEVAL	Error Evaluate Register
0x01C0 0340	0x01E3 0340	DRAE0	DMA Region Access Enable Register for Region 0
0x01C0 0348	0x01E3 0348	DRAE1	DMA Region Access Enable Register for Region 1
0x01C0 0350	0x01E3 0350	DRAE2	DMA Region Access Enable Register for Region 2
0x01C0 0358	0x01E3 0358	DRAE3	DMA Region Access Enable Register for Region 3
0x01C0 0380	0x01E3 0380	QRAE0	QDMA Region Access Enable Register for Region 0
0x01C0 0384	0x01E3 0384	QRAE1	QDMA Region Access Enable Register for Region 1
0x01C0 0388	0x01E3 0388	QRAE2	QDMA Region Access Enable Register for Region 2
0x01C0 038C	0x01E3 038C	QRAE3	QDMA Region Access Enable Register for Region 3
0x01C0 0400 - 0x01C0 043C	0x01E3 0400 - 0x01E3 043C	Q0E0-Q0E15	Event Queue Entry Registers Q0E0-Q0E15
0x01C0 0440 - 0x01C0 047C	0x01E3 0440 - 0x01E3 047C	Q1E0-Q1E15	Event Queue Entry Registers Q1E0-Q1E15
0x01C0 0600	0x01E3 0600	QSTAT0	Queue 0 Status Register
0x01C0 0604	0x01E3 0604	QSTAT1	Queue 1 Status Register
0x01C0 0620	0x01E3 0620	QWMTHRA	Queue Watermark Threshold A Register
0x01C0 0640	0x01E3 0640	CCSTAT	EDMA3CC Status Register
Global Channel Registers			
0x01C0 1000	0x01E3 1000	ER	Event Register

(1) On previous architectures, the EDMA3TC priority was controlled by the queue priority register (QUEPRI) in the EDMA3CC memory-map. However for this device, the priority control for the transfer controllers is controlled by the chip-level registers in the System Configuration Module. You should use the chip-level registers and not QUEPRI to configure the TC priority.

 Copyright © 2011–2013, Texas Instruments Incorporated

Table 5-15. EDMA3 Channel Controller (EDMA3CC) Registers (continued)

EDMA0 Channel Controller 0 BYTE ADDRESS	EDMA1 Channel Controller 0 BYTE ADDRESS	ACRONYM	REGISTER DESCRIPTION
0x01C0 1008	0x01E3 1008	ECR	Event Clear Register
0x01C0 1010	0x01E3 1010	ESR	Event Set Register
0x01C0 1018	0x01E3 1018	CER	Chained Event Register
0x01C0 1020	0x01E3 1020	EER	Event Enable Register
0x01C0 1028	0x01E3 1028	EECR	Event Enable Clear Register
0x01C0 1030	0x01E3 1030	EESR	Event Enable Set Register
0x01C0 1038	0x01E3 1038	SER	Secondary Event Register
0x01C0 1040	0x01E3 1040	SECR	Secondary Event Clear Register
0x01C0 1050	0x01E3 1050	IER	Interrupt Enable Register
0x01C0 1058	0x01E3 1058	IECR	Interrupt Enable Clear Register
0x01C0 1060	0x01E3 1060	IESR	Interrupt Enable Set Register
0x01C0 1068	0x01E3 1068	IPR	Interrupt Pending Register
0x01C0 1070	0x01E3 1070	ICR	Interrupt Clear Register
0x01C0 1078	0x01E3 1078	IEVAL	Interrupt Evaluate Register
0x01C0 1080	0x01E3 1080	QER	QDMA Event Register
0x01C0 1084	0x01E3 1084	QEER	QDMA Event Enable Register
0x01C0 1088	0x01E3 1088	QEECR	QDMA Event Enable Clear Register
0x01C0 108C	0x01E3 108C	QEESR	QDMA Event Enable Set Register
0x01C0 1090	0x01E3 1090	QSER	QDMA Secondary Event Register
0x01C0 1094	0x01E3 1094	QSECR	QDMA Secondary Event Clear Register
Shadow Region 0 Channel Registers			
0x01C0 2000	0x01E3 2000	ER	Event Register
0x01C0 2008	0x01E3 2008	ECR	Event Clear Register
0x01C0 2010	0x01E3 2010	ESR	Event Set Register
0x01C0 2018	0x01E3 2018	CER	Chained Event Register
0x01C0 2020	0x01E3 2020	EER	Event Enable Register
0x01C0 2028	0x01E3 2028	EECR	Event Enable Clear Register
0x01C0 2030	0x01E3 2030	EESR	Event Enable Set Register
0x01C0 2038	0x01E3 2038	SER	Secondary Event Register
0x01C0 2040	0x01E3 2040	SECR	Secondary Event Clear Register
0x01C0 2050	0x01E3 2050	IER	Interrupt Enable Register
0x01C0 2058	0x01E3 2058	IECR	Interrupt Enable Clear Register
0x01C0 2060	0x01E3 2060	IESR	Interrupt Enable Set Register
0x01C0 2068	0x01E3 2068	IPR	Interrupt Pending Register
0x01C0 2070	0x01E3 2070	ICR	Interrupt Clear Register
0x01C0 2078	0x01E3 2078	IEVAL	Interrupt Evaluate Register
0x01C0 2080	0x01E3 2080	QER	QDMA Event Register
0x01C0 2084	0x01E3 2084	QEER	QDMA Event Enable Register
0x01C0 2088	0x01E3 2088	QEECR	QDMA Event Enable Clear Register
0x01C0 208C	0x01E3 208C	QEESR	QDMA Event Enable Set Register
0x01C0 2090	0x01E3 2090	QSER	QDMA Secondary Event Register
0x01C0 2094	0x01E3 2094	QSECR	QDMA Secondary Event Clear Register
Shadow Region 1 Channel Registers			
0x01C0 2200	0x01E3 2200	ER	Event Register
0x01C0 2208	0x01E3 2208	ECR	Event Clear Register
0x01C0 2210	0x01E3 2210	ESR	Event Set Register

Copyright © 2011–2013, Texas Instruments Incorporated

Table 5-15. EDMA3 Channel Controller (EDMA3CC) Registers (continued)

EDMA0 Channel Controller 0 BYTE ADDRESS	EDMA1 Channel Controller 0 BYTE ADDRESS	ACRONYM	REGISTER DESCRIPTION
0x01C0 2218	0x01E3 2218	CER	Chained Event Register
0x01C0 2220	0x01E3 2220	EER	Event Enable Register
0x01C0 2228	0x01E3 2228	EECR	Event Enable Clear Register
0x01C0 2230	0x01E3 2230	EESR	Event Enable Set Register
0x01C0 2238	0x01E3 2238	SER	Secondary Event Register
0x01C0 2240	0x01E3 2240	SECR	Secondary Event Clear Register
0x01C0 2250	0x01E3 2250	IER	Interrupt Enable Register
0x01C0 2258	0x01E3 2258	IECR	Interrupt Enable Clear Register
0x01C0 2260	0x01E3 2260	IESR	Interrupt Enable Set Register
0x01C0 2268	0x01E3 2268	IPR	Interrupt Pending Register
0x01C0 2270	0x01E3 2270	ICR	Interrupt Clear Register
0x01C0 2278	0x01E3 2278	IEVAL	Interrupt Evaluate Register
0x01C0 2280	0x01E3 2280	QER	QDMA Event Register
0x01C0 2284	0x01E3 2284	QEER	QDMA Event Enable Register
0x01C0 2288	0x01E3 2288	QEECR	QDMA Event Enable Clear Register
0x01C0 228C	0x01E3 228C	QEESR	QDMA Event Enable Set Register
0x01C0 2290	0x01E3 2290	QSER	QDMA Secondary Event Register
0x01C0 2294	0x01E3 2294	QSECR	QDMA Secondary Event Clear Register
0x01C0 4000 - 0x01C0 4FFF	0x01E3 4000 - 0x01E3 4FFF	—	Parameter RAM (PaRAM)

Table 5-16. EDMA3 Transfer Controller (EDMA3TC) Registers

EDMA0 Transfer Controller 0 BYTE ADDRESS	EDMA0 Transfer Controller 1 BYTE ADDRESS	EDMA1 Transfer Controller 0 BYTE ADDRESS	ACRONYM	REGISTER DESCRIPTION
0x01C0 8000	0x01C0 8400	0x01E3 8000	PID	Peripheral Identification Register
0x01C0 8004	0x01C0 8404	0x01E3 8004	TCCFG	EDMA3TC Configuration Register
0x01C0 8100	0x01C0 8500	0x01E3 8100	TCSTAT	EDMA3TC Channel Status Register
0x01C0 8120	0x01C0 8520	0x01E3 8120	ERRSTAT	Error Status Register
0x01C0 8124	0x01C0 8524	0x01E3 8124	ERREN	Error Enable Register
0x01C0 8128	0x01C0 8528	0x01E3 8128	ERRCLR	Error Clear Register
0x01C0 812C	0x01C0 852C	0x01E3 812C	ERRDET	Error Details Register
0x01C0 8130	0x01C0 8530	0x01E3 8130	ERRCMD	Error Interrupt Command Register
0x01C0 8140	0x01C0 8540	0x01E3 8140	RDRATE	Read Command Rate Register
0x01C0 8240	0x01C0 8640	0x01E3 8240	SAOPT	Source Active Options Register
0x01C0 8244	0x01C0 8644	0x01E3 8244	SASRC	Source Active Source Address Register
0x01C0 8248	0x01C0 8648	0x01E3 8248	SACNT	Source Active Count Register
0x01C0 824C	0x01C0 864C	0x01E3 824C	SADST	Source Active Destination Address Register
0x01C0 8250	0x01C0 8650	0x01E3 8250	SABIDX	Source Active B-Index Register
0x01C0 8254	0x01C0 8654	0x01E3 8254	SAMPPRXY	Source Active Memory Protection Proxy Register
0x01C0 8258	0x01C0 8658	0x01E3 8258	SACNTRLD	Source Active Count Reload Register
0x01C0 825C	0x01C0 865C	0x01E3 825C	SASRCBREF	Source Active Source Address B-Reference Register
0x01C0 8260	0x01C0 8660	0x01E3 8260	SADSTBREF	Source Active Destination Address B-Reference Register
0x01C0 8280	0x01C0 8680	0x01E3 8280	DFCNTRLD	Destination FIFO Set Count Reload Register
0x01C0 8284	0x01C0 8684	0x01E3 8284	DFSRCBREF	Destination FIFO Set Source Address B-Reference Register

Copyright © 2011–2013, Texas Instruments Incorporated

Table 5-16. EDMA3 Transfer Controller (EDMA3TC) Registers (continued)

EDMA0 Transfer Controller 0 BYTE ADDRESS	EDMA0 Transfer Controller 1 BYTE ADDRESS	EDMA1 Transfer Controller 0 BYTE ADDRESS	ACRONYM	REGISTER DESCRIPTION
0x01C0 8288	0x01C0 8688	0x01E3 8288	DFDSTBREF	Destination FIFO Set Destination Address B-Reference Register
0x01C0 8300	0x01C0 8700	0x01E3 8300	DFOPT0	Destination FIFO Options Register 0
0x01C0 8304	0x01C0 8704	0x01E3 8304	DFSRC0	Destination FIFO Source Address Register 0
0x01C0 8308	0x01C0 8708	0x01E3 8308	DFCNT0	Destination FIFO Count Register 0
0x01C0 830C	0x01C0 870C	0x01E3 830C	DFDST0	Destination FIFO Destination Address Register 0
0x01C0 8310	0x01C0 8710	0x01E3 8310	DFBIDX0	Destination FIFO B-Index Register 0
0x01C0 8314	0x01C0 8714	0x01E3 8314	DFMPPRXY0	Destination FIFO Memory Protection Proxy Register 0
0x01C0 8340	0x01C0 8740	0x01E3 8340	DFOPT1	Destination FIFO Options Register 1
0x01C0 8344	0x01C0 8744	0x01E3 8344	DFSRC1	Destination FIFO Source Address Register 1
0x01C0 8348	0x01C0 8748	0x01E3 8348	DFCNT1	Destination FIFO Count Register 1
0x01C0 834C	0x01C0 874C	0x01E3 834C	DFDST1	Destination FIFO Destination Address Register 1
0x01C0 8350	0x01C0 8750	0x01E3 8350	DFBIDX1	Destination FIFO B-Index Register 1
0x01C0 8354	0x01C0 8754	0x01E3 8354	DFMPPRXY1	Destination FIFO Memory Protection Proxy Register 1
0x01C0 8380	0x01C0 8780	0x01E3 8380	DFOPT2	Destination FIFO Options Register 2
0x01C0 8384	0x01C0 8784	0x01E3 8384	DFSRC2	Destination FIFO Source Address Register 2
0x01C0 8388	0x01C0 8788	0x01E3 8388	DFCNT2	Destination FIFO Count Register 2
0x01C0 838C	0x01C0 878C	0x01E3 838C	DFDST2	Destination FIFO Destination Address Register 2
0x01C0 8390	0x01C0 8790	0x01E3 8390	DFBIDX2	Destination FIFO B-Index Register 2
0x01C0 8394	0x01C0 8794	0x01E3 8394	DFMPPRXY2	Destination FIFO Memory Protection Proxy Register 2
0x01C0 83C0	0x01C0 87C0	0x01E3 83C0	DFOPT3	Destination FIFO Options Register 3
0x01C0 83C4	0x01C0 87C4	0x01E3 83C4	DFSRC3	Destination FIFO Source Address Register 3
0x01C0 83C8	0x01C0 87C8	0x01E3 83C8	DFCNT3	Destination FIFO Count Register 3
0x01C0 83CC	0x01C0 87CC	0x01E3 83CC	DFDST3	Destination FIFO Destination Address Register 3
0x01C0 83D0	0x01C0 87D0	0x01E3 83D0	DFBIDX3	Destination FIFO B-Index Register 3
0x01C0 83D4	0x01C0 87D4	0x01E3 83D4	DFMPPRXY3	Destination FIFO Memory Protection Proxy Register 3

Table 5-17 shows an abbreviation of the set of registers which make up the parameter set for each of 128 EDMA events. Each of the parameter register sets consist of 8 32-bit word entries. Table 5-18 shows the parameter set entry registers with relative memory address locations within each of the parameter sets.

Table 5-17. EDMA Parameter Set RAM

EDMA0 Channel Controller 0 BYTE ADDRESS RANGE	EDMA1 Channel Controller 0 BYTE ADDRESS RANGE	DESCRIPTION
0x01C0 4000 - 0x01C0 401F	0x01E3 4000 - 0x01E3 401F	Parameters Set 0 (8 32-bit words)
0x01C0 4020 - 0x01C0 403F	0x01E3 4020 - 0x01E3 403F	Parameters Set 1 (8 32-bit words)
0x01C0 4040 - 0x01CC0 405F	0x01E3 4040 - 0x01CE3 405F	Parameters Set 2 (8 32-bit words)
0x01C0 4060 - 0x01C0 407F	0x01E3 4060 - 0x01E3 407F	Parameters Set 3 (8 32-bit words)
0x01C0 4080 - 0x01C0 409F	0x01E3 4080 - 0x01E3 409F	Parameters Set 4 (8 32-bit words)
0x01C0 40A0 - 0x01C0 40BF	0x01E3 40A0 - 0x01E3 40BF	Parameters Set 5 (8 32-bit words)
...	...	...
0x01C0 4FC0 - 0x01C0 4FDF	0x01E3 4FC0 - 0x01E3 4FDF	Parameters Set 126 (8 32-bit words)
0x01C0 4FE0 - 0x01C0 4FFF	0x01E3 4FE0 - 0x01E3 4FFF	Parameters Set 127 (8 32-bit words)

Table 5-18. Parameter Set Entries

OFFSET BYTE ADDRESS WITHIN THE PARAMETER SET	ACRONYM	PARAMETER ENTRY
0x0000	OPT	Option
0x0004	SRC	Source Address
0x0008	A_B_CNT	A Count, B Count
0x000C	DST	Destination Address
0x0010	SRC_DST_BIDX	Source B Index, Destination B Index
0x0014	LINK_BCNTRLD	Link Address, B Count Reload
0x0018	SRC_DST_CIDX	Source C Index, Destination C Index
0x001C	CCNT	C Count

Copyright © 2011–2013, Texas Instruments Incorporated

5.10 External Memory Interface A (EMIFA)

EMIFA is one of two external memory interfaces supported on the device. It is primarily intended to support asynchronous memory types, such as NAND and NOR flash and Asynchronous SRAM. However on this device, EMIFA also provides a secondary interface to SDRAM.

5.10.1 EMIFA Asynchronous Memory Support

EMIFA supports asynchronous:

- SRAM memories
- NAND Flash memories
- NOR Flash memories

The EMIFA data bus width is up to 16-bits.The device supports up to 23 address lines and two external wait/interrupt inputs. Up to four asynchronous chip selects are supported by EMIFA (EMA_CS[5:2]).

Each chip select has the following individually programmable attributes:

- Data Bus Width
- Read cycle timings: setup, hold, strobe
- Write cycle timings: setup, hold, strobe
- Bus turn around time
- Extended Wait Option With Programmable Timeout
- Select Strobe Option
- NAND flash controller supports 1-bit and 4-bit ECC calculation on blocks of 512 bytes.

5.10.2 EMIFA Synchronous DRAM Memory Support

The device supports 16-bit SDRAM in addition to the asynchronous memories listed in Section 5.10.1. It has a single SDRAM chip select (EMA_CS[0]). SDRAM configurations that are supported are:

- One, Two, and Four Bank SDRAM devices
- Devices with Eight, Nine, Ten, and Eleven Column Address
- CAS Latency of two or three clock cycles
- Sixteen Bit Data Bus Width

Additionally, the SDRAM interface of EMIFA supports placing the SDRAM in Self Refresh and Powerdown Modes. Self Refresh mode allows the SDRAM to be put into a low power state while still retaining memory contents; since the SDRAM will continue to refresh itself even without clocks from the device. Powerdown mode achieves even lower power, except the device must periodically wake the SDRAM up and issue refreshes if data retention is required.

Finally, note that the EMIFA does not support Mobile SDRAM devices.

Table 5-19 shows the supported SDRAM configurations for EMIFA.

Table 5-19. EMIFA Supported SDRAM Configurations (1)

SDRAM Memory Data Bus Width (bits)	Number of Memories	EMIFA Data Bus Size (bits)	Rows	Columns	Banks	Total Memory (Mbits)	Total Memory (Mbytes)	Memory Density (Mbits)
16	1	16	16	8	1	256	32	256
	1	16	16	8	2	512	64	512
	1	16	16	8	4	1024	128	1024
	1	16	16	9	1	512	64	512
	1	16	16	9	2	1024	128	1024
	1	16	16	9	4	2048	256	2048
	1	16	16	10	1	1024	128	1024
	1	16	16	10	2	2048	256	2048
	1	16	16	10	4	4096	512	4096
	1	16	16	11	1	2048	256	2048
	1	16	16	11	2	4096	512	4096
	1	16	15	11	4	4096	512	4096
8	2	16	16	8	1	256	32	128
	2	16	16	8	2	512	64	256
	2	16	16	8	4	1024	128	512
	2	16	16	9	1	512	64	256
	2	16	16	9	2	1024	128	512
	2	16	16	9	4	2048	256	1024
	2	16	16	10	1	1024	128	512
	2	16	16	10	2	2048	256	1024
	2	16	16	10	4	4096	512	2048
	2	16	16	11	1	2048	256	1024
	2	16	16	11	2	4096	512	2048
	2	16	15	11	4	4096	512	2048

(1) The shaded cells indicate configurations that are possible on the EMIFA interface but as of this writing SDRAM memories capable of supporting these densities are not available in the market.

5.10.3 EMIFA SDRAM Loading Limitations

EMIFA supports SDRAM up to 100 MHz with up to two SDRAM or asynchronous memory loads. Additional loads will limit the SDRAM operation to lower speeds and the maximum speed should be confirmed by board simulation using IBIS models.

5.10.4 EMIFA Connection Examples

Figure 5-10 illustrates an example of how SDRAM, NOR, and NAND flash devices might be connected to EMIFA of a SMOMAPL138B device simultaneously. The SDRAM chip select must be $\overline{\text{EMA_CS[0]}}$. Note that the NOR flash is connected to $\overline{\text{EMA_CS[2]}}$ and the NAND flash is connected to $\overline{\text{EMA_CS[3]}}$ in this example. Note that any type of asynchronous memory may be connected to $\overline{\text{EMA_CS[5:2]}}$.

The on-chip bootloader makes some assumptions on which chip select the contains the boot image, and this depends on the boot mode. For NOR boot mode; the on-chip bootloader requires that the image be stored in NOR flash on $\overline{\text{EMA_CS[2]}}$. For NAND boot mode, the bootloader requires that the boot image is stored in NAND flash on $\overline{\text{EMA_CS[3]}}$. It is always possible to have the image span multiple chip selects, but this must be supported by second stage boot code stored in the external flash.

 Copyright © 2011–2013, Texas Instruments Incorporated

A likely use case with more than one EMIFA chip select used for NAND flash is illustrated in Figure 5-11. This figure shows how two multiplane NAND flash devices with two chip selects each would connect to the EMIFA. In this case if NAND is the boot memory, then the boot image needs to be stored in the NAND area selected by EMA_CS[3]. Part of the application image could spill over into the NAND regions selected by other EMIFA chip selects; but would rely on the code stored in the EMA_CS[3] area to bootload it.

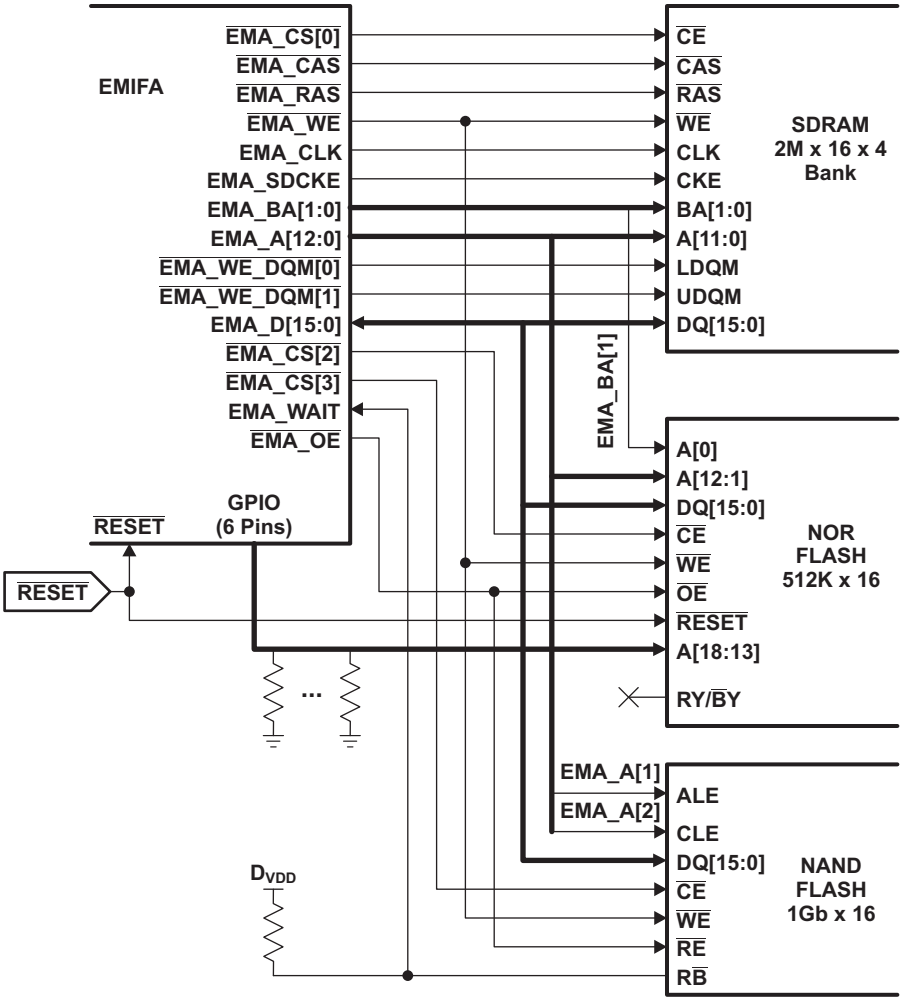

Figure 5-10. SMOMAPL138B Connection Diagram: SDRAM, NOR, NAND

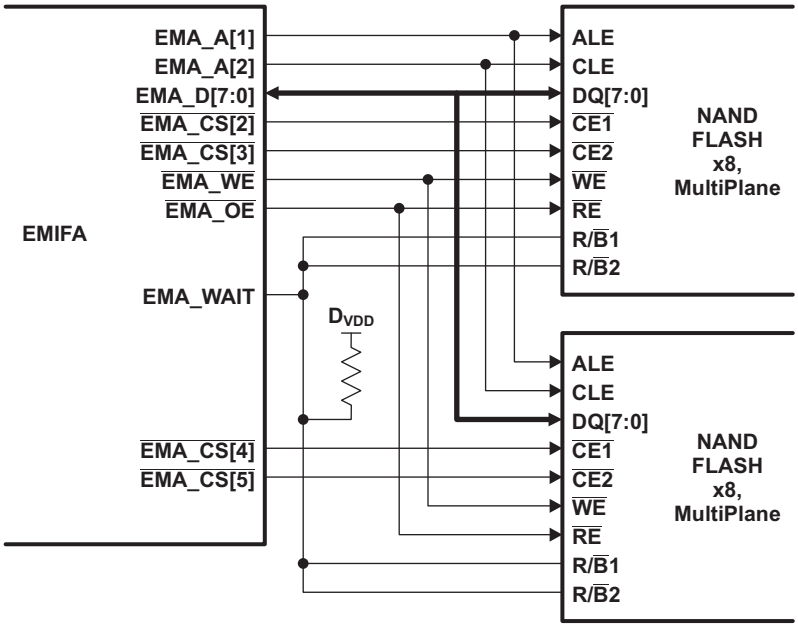

Figure 5-11. SMOMAPL138B EMIFA Connection Diagram: Multiple NAND Flash Planes

Copyright © 2011–2013, Texas Instruments Incorporated

5.10.5 External Memory Interface Register Descriptions

Table 5-20. External Memory Interface (EMIFA) Registers

BYTE ADDRESS	ACRONYM	REGISTER DESCRIPTION
0x6800 0000	MIDR	Module ID Register
0x6800 0004	AWCC	Asynchronous Wait Cycle Configuration Register
0x6800 0008	SDCR	SDRAM Configuration Register
0x6800 000C	SDRCR	SDRAM Refresh Control Register
0x6800 0010	CE2CFG	Asynchronous 1 Configuration Register
0x6800 0014	CE3CFG	Asynchronous 2 Configuration Register
0x6800 0018	CE4CFG	Asynchronous 3 Configuration Register
0x6800 001C	CE5CFG	Asynchronous 4 Configuration Register
0x6800 0020	SDTIMR	SDRAM Timing Register
0x6800 003C	SDSRETR	SDRAM Self Refresh Exit Timing Register
0x6800 0040	INTRAW	EMIFA Interrupt Raw Register
0x6800 0044	INTMSK	EMIFA Interrupt Mask Register
0x6800 0048	INTMSKSET	EMIFA Interrupt Mask Set Register
0x6800 004C	INTMSKCLR	EMIFA Interrupt Mask Clear Register
0x6800 0060	NANDFCR	NAND Flash Control Register
0x6800 0064	NANDFSR	NAND Flash Status Register
0x6800 0070	NANDF1ECC	NAND Flash 1 ECC Register (CS2 Space)
0x6800 0074	NANDF2ECC	NAND Flash 2 ECC Register (CS3 Space)
0x6800 0078	NANDF3ECC	NAND Flash 3 ECC Register (CS4 Space)
0x6800 007C	NANDF4ECC	NAND Flash 4 ECC Register (CS5 Space)
0x6800 00BC	NAND4BITECCLOAD	NAND Flash 4-Bit ECC Load Register
0x6800 00C0	NAND4BITECC1	NAND Flash 4-Bit ECC Register 1
0x6800 00C4	NAND4BITECC2	NAND Flash 4-Bit ECC Register 2
0x6800 00C8	NAND4BITECC3	NAND Flash 4-Bit ECC Register 3
0x6800 00CC	NAND4BITECC4	NAND Flash 4-Bit ECC Register 4
0x6800 00D0	NANDERRADD1	NAND Flash 4-Bit ECC Error Address Register 1
0x6800 00D4	NANDERRADD2	NAND Flash 4-Bit ECC Error Address Register 2
0x6800 00D8	NANDERRVAL1	NAND Flash 4-Bit ECC Error Value Register 1
0x6800 00DC	NANDERRVAL2	NAND Flash 4-Bit ECC Error Value Register 2

Copyright © 2011–2013, Texas Instruments Incorporated

5.10.6 EMIFA Electrical Data/Timing

Table 5-21 through Table 5-24 assume testing over recommended operating conditions.

Table 5-21. Timing Requirements for EMIFA SDRAM Interface

NO.	PARAMETER		1.3V, 1.2V		1.1V		1.0V		UNIT
			MIN	MAX	MIN	MAX	MIN	MAX	
19	$t_{su(EMA_DV-EM_CLKH)}$	Input setup time, read data valid on EMA_D[15:0] before EMA_CLK rising	2		3		3		ns
20	$t_{h(CLKH-DIV)}$	Input hold time, read data valid on EMA_D[15:0] after EMA_CLK rising	1.6		1.6		1.6		ns

Table 5-22. Switching Characteristics for EMIFA SDRAM Interface

NO.	PARAMETER		1.3V, 1.2V		1.1V		1.0V		UNIT
			MIN	MAX	MIN	MAX	MIN	MAX	
1	$t_{c(CLK)}$	Cycle time, EMIF clock EMA_CLK	10		15		20		ns
2	$t_{w(CLK)}$	Pulse width, EMIF clock EMA_CLK high or low	3		5		8		ns
3	$t_{d(CLKH-CSV)}$	Delay time, EMA_CLK rising to $\overline{EMA_CS[0]}$ valid		7		9.5		13	ns
4	$t_{oh(CLKH-CSIV)}$	Output hold time, EMA_CLK rising to $\overline{EMA_CS[0]}$ invalid	1		1		1		ns
5	$t_{d(CLKH-DQMV)}$	Delay time, EMA_CLK rising to EMA_$\overline{WE}$_DQM[1:0] valid		7		9.5		13	ns
6	$t_{oh(CLKH-DQMIV)}$	Output hold time, EMA_CLK rising to EMA_$\overline{WE}$_DQM[1:0] invalid	1		1		1		ns
7	$t_{d(CLKH-AV)}$	Delay time, EMA_CLK rising to EMA_A[12:0] and EMA_BA[1:0] valid		7		9.5		13	ns
8	$t_{oh(CLKH-AIV)}$	Output hold time, EMA_CLK rising to EMA_A[12:0] and EMA_BA[1:0] invalid	1		1		1		ns
9	$t_{d(CLKH-DV)}$	Delay time, EMA_CLK rising to EMA_D[15:0] valid		7		9.5		13	ns
10	$t_{oh(CLKH-DIV)}$	Output hold time, EMA_CLK rising to EMA_D[15:0] invalid	1		1		1		ns
11	$t_{d(CLKH-RASV)}$	Delay time, EMA_CLK rising to $\overline{EMA_RAS}$ valid		7		9.5		13	ns
12	$t_{oh(CLKH-RASIV)}$	Output hold time, EMA_CLK rising to $\overline{EMA_RAS}$ invalid	1		1		1		ns
13	$t_{d(CLKH-CASV)}$	Delay time, EMA_CLK rising to $\overline{EMA_CAS}$ valid		7		9.5		13	ns
14	$t_{oh(CLKH-CASIV)}$	Output hold time, EMA_CLK rising to $\overline{EMA_CAS}$ invalid	1		1		1		ns
15	$t_{d(CLKH-WEV)}$	Delay time, EMA_CLK rising to $\overline{EMA_WE}$ valid		7		9.5		13	ns
16	$t_{oh(CLKH-WEIV)}$	Output hold time, EMA_CLK rising to $\overline{EMA_WE}$ invalid	1		1		1		ns
17	$t_{dis(CLKH-DHZ)}$	Delay time, EMA_CLK rising to EMA_D[15:0] tri-stated		7		9.5		13	ns
18	$t_{ena(CLKH-DLZ)}$	Output hold time, EMA_CLK rising to EMA_D[15:0] driving	1		1		1		ns

Copyright © 2011–2013, Texas Instruments Incorporated

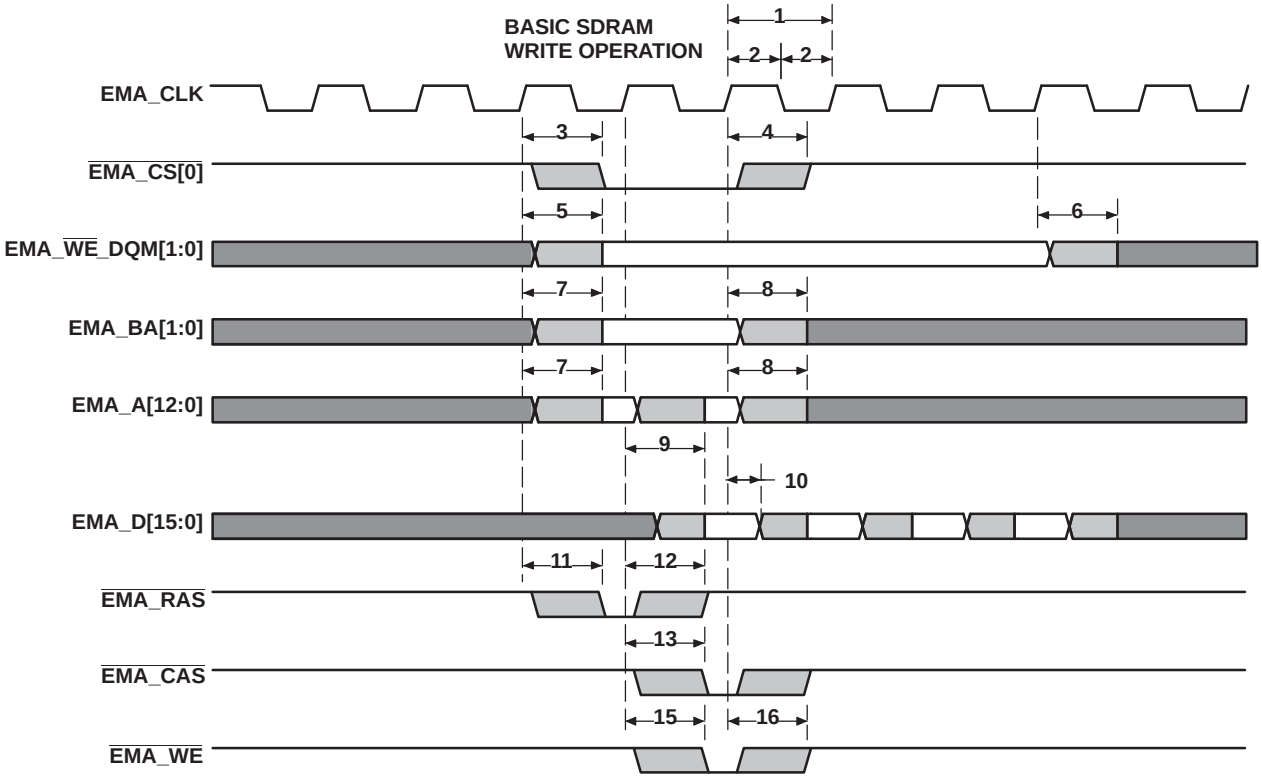

Figure 5-12. EMIFA Basic SDRAM Write Operation

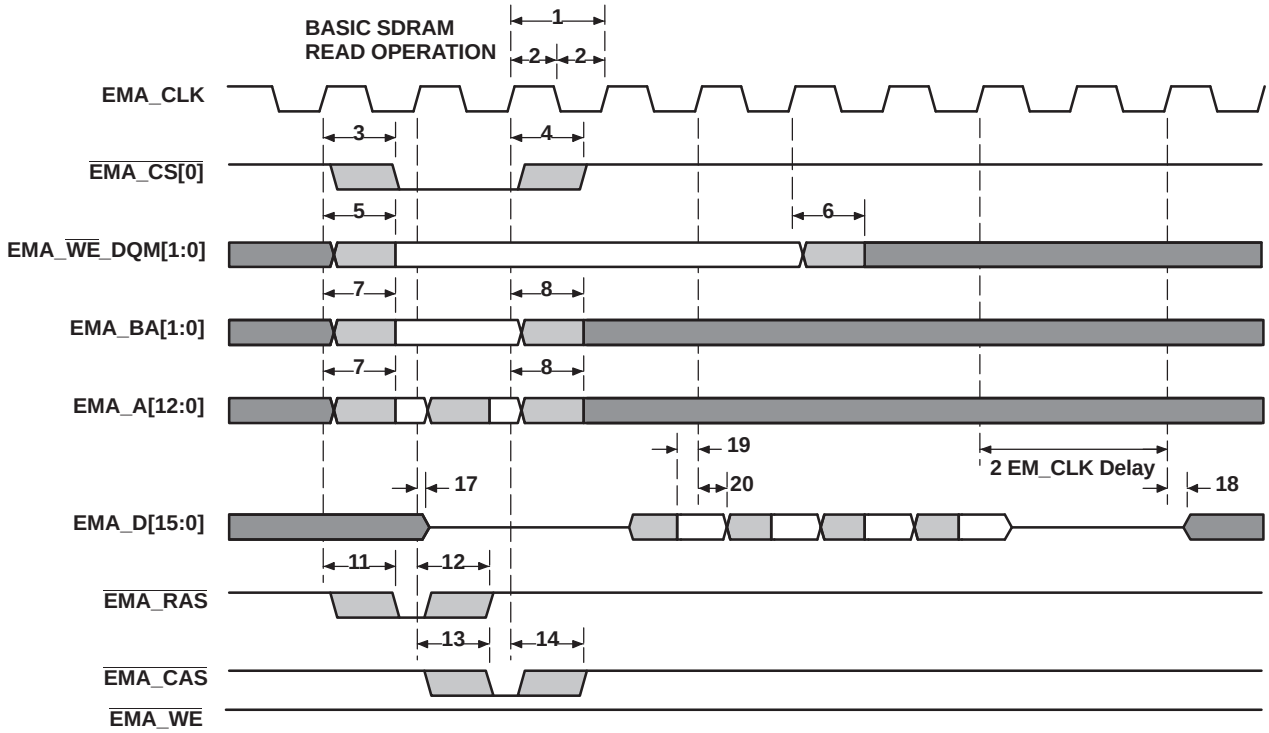

Figure 5-13. EMIFA Basic SDRAM Read Operation

Table 5-23. Timing Requirements for EMIFA Asynchronous Memory Interface (1)

NO.	PARAMETER		1.3V, 1.2V		1.1V		1.0V		UNIT
			MIN	MAX	MIN	MAX	MIN	MAX	
READS and WRITES									
E	$t_{c(CLK)}$	Cycle time, EMIFA module clock	6.75		15		20		ns
2	$t_{w(EM_WAIT)}$	Pulse duration, EM_WAIT assertion and deassertion	2E		2E		2E		ns
READS									
12	$t_{su(EMDV-EMOEH)}$	Setup time, EM_D[15:0] valid before $\overline{EM_OE}$ high	3		5		7		ns
13	$t_{h(EMOEH-EMDIV)}$	Hold time, EM_D[15:0] valid after $\overline{EM_OE}$ high	0		0		0		ns
14	$t_{su\ (EMOEL-EMWAIT)}$	Setup Time, EM_WAIT asserted before end of Strobe Phase (2)	4E+3		4E+3		4E+3		ns
WRITES									
28	$t_{su\ (EMWEL-EMWAIT)}$	Setup Time, EM_WAIT asserted before end of Strobe Phase (2)	4E+3		4E+3		4E+3		ns

(1) E = EMA_CLK period or in ns. EMA_CLK is selected either as SYSCLK3 or the PLL0 output clock divided by 4.5. As an example, when SYSCLK3 is selected and set to 100MHz, E=10ns

(2) Setup before end of STROBE phase (if no extended wait states are inserted) by which EM_WAIT must be asserted to add extended wait states. Figure 5-16 and Figure 5-17 describe EMIF transactions that include extended wait states inserted during the STROBE phase. However, cycles inserted as part of this extended wait period should not be counted; the 4E requirement is to the start of where the HOLD phase would begin if there were no extended wait cycles.

Table 5-24. Switching Characteristics for EMIFA Asynchronous Memory Interface (1) (2) (3)

NO.	PARAMETER		1.3V, 1.2V, 1.1V, 1.0V			UNIT
			MIN	NOM	MAX	
READS and WRITES						
1	$t_{d(TURNAROUND)}$	Turn around time	(TA)*E - 3	(TA)*E	(TA)*E + 3	ns
READS						
3	$t_{c(EMRCYCLE)}$	EMIF read cycle time (EW = 0)	(RS+RST+RH)*E - 3	(RS+RST+RH)*E	(RS+RST+RH)*E + 3	ns
		EMIF read cycle time (EW = 1)	(RS+RST+RH+(EWC*16))*E - 3	(RS+RST+RH+(EWC*16))*E	(RS+RST+RH+(EWC*16))*E + 3	ns
4	$t_{su(EMCEL-EMOEL)}$	Output setup time, $\overline{EMA_CE[5:2]}$ low to $\overline{EMA_OE}$ low (SS = 0)	(RS)*E-3	(RS)*E	(RS)*E+3	ns
		Output setup time, $\overline{EMA_CE[5:2]}$ low to $\overline{EMA_OE}$ low (SS = 1)	-3	0	+3	ns
5	$t_{h(EMOEH-EMCEH)}$	Output hold time, $\overline{EMA_OE}$ high to $\overline{EMA_CE[5:2]}$ high (SS = 0)	(RH)*E - 3	(RH)*E	(RH)*E + 3	ns
		Output hold time, $\overline{EMA_OE}$ high to $\overline{EMA_CE[5:2]}$ high (SS = 1)	-3	0	+3	ns
6	$t_{su(EMBAV-EMOEL)}$	Output setup time, $\overline{EMA_BA[1:0]}$ valid to $\overline{EMA_OE}$ low	(RS)*E-3	(RS)*E	(RS)*E+3	ns
7	$t_{h(EMOEH-EMBAIV)}$	Output hold time, $\overline{EMA_OE}$ high to $\overline{EMA_BA[1:0]}$ invalid	(RH)*E-3	(RH)*E	(RH)*E+3	ns
8	$t_{su(EMBAV-EMOEL)}$	Output setup time, $\overline{EMA_A[13:0]}$ valid to $\overline{EMA_OE}$ low	(RS)*E-3	(RS)*E	(RS)*E+3	ns
9	$t_{h(EMOEH-EMAIV)}$	Output hold time, $\overline{EMA_OE}$ high to $\overline{EMA_A[13:0]}$ invalid	(RH)*E-3	(RH)*E	(RH)*E+3	ns

(1) TA = Turn around, RS = Read setup, RST = Read strobe, RH = Read hold, WS = Write setup, WST = Write strobe, WH = Write hold, MEWC = Maximum external wait cycles. These parameters are programmed via the Asynchronous Bank and Asynchronous Wait Cycle Configuration Registers. These support the following range of values: TA[4-1], RS[16-1], RST[64-1], RH[8-1], WS[16-1], WST[64-1], WH[8-1], and MEW[1-256].

(2) E = EMA_CLK period or in ns. EMA_CLK is selected either as SYSCLK3 or the PLL0 output clock divided by 4.5. As an example, when SYSCLK3 is selected and set to 100MHz, E=10ns.

(3) EWC = external wait cycles determined by EMA_WAIT input signal. EWC supports the following range of values EWC[256-1]. Note that the maximum wait time before timeout is specified by bit field MEWC in the Asynchronous Wait Cycle Configuration Register.

 Copyright © 2011–2013, Texas Instruments Incorporated

Table 5-24. Switching Characteristics for EMIFA Asynchronous Memory Interface (1) (2) (3) (continued)

NO.	PARAMETER		1.3V, 1.2V, 1.1V, 1.0V			UNIT
			MIN	NOM	MAX	
10	$t_{w(EMOEL)}$	$\overline{EMA_OE}$ active low width (EW = 0)	(RST)*E-3	(RST)*E	(RST)*E+3	ns
		$\overline{EMA_OE}$ active low width (EW = 1)	(RST+(EWC*16))*E-3	(RST+(EWC*16))*E	(RST+(EWC*16))*E+3	ns
11	$t_{d(EMWAITH-EMOEH)}$	Delay time from EMA_WAIT deasserted to $\overline{EMA_OE}$ high	3E-3	4E	4E+3	ns
WRITES						
15	$t_{c(EMWCYCLE)}$	EMIF write cycle time (EW = 0)	(WS+WST+WH)*E-3	(WS+WST+WH)*E	(WS+WST+WH)*E+3	ns
		EMIF write cycle time (EW = 1)	(WS+WST+WH+(EWC*16))*E - 3	(WS+WST+WH+(EWC*16))*E	(WS+WST+WH+(EWC*16))*E + 3	ns
16	$t_{su(EMCEL-EMWEL)}$	Output setup time, $\overline{EMA_CE[5:2]}$ low to $\overline{EMA_WE}$ low (SS = 0)	(WS)*E - 3	(WS)*E	(WS)*E + 3	ns
		Output setup time, $\overline{EMA_CE[5:2]}$ low to $\overline{EMA_WE}$ low (SS = 1)	-3	0	+3	ns
17	$t_{h(EMWEH-EMCEH)}$	Output hold time, $\overline{EMA_WE}$ high to $\overline{EMA_CE[5:2]}$ high (SS = 0)	(WH)*E-3	(WH)*E	(WH)*E+3	ns
		Output hold time, $\overline{EMA_WE}$ high to $\overline{EMA_CE[5:2]}$ high (SS = 1)	-3	0	+3	ns
18	$t_{su(EMDQMV-EMWEL)}$	Output setup time, $\overline{EMA_BA[1:0]}$ valid to $\overline{EMA_WE}$ low	(WS)*E-3	(WS)*E	(WS)*E+3	ns
19	$t_{h(EMWEH-EMDQMIV)}$	Output hold time, $\overline{EMA_WE}$ high to $\overline{EMA_BA[1:0]}$ invalid	(WH)*E-3	(WH)*E	(WH)*E+3	ns
20	$t_{su(EMBAV-EMWEL)}$	Output setup time, $\overline{EMA_BA[1:0]}$ valid to $\overline{EMA_WE}$ low	(WS)*E-3	(WS)*E	(WS)*E+3	ns
21	$t_{h(EMWEH-EMBAIV)}$	Output hold time, $\overline{EMA_WE}$ high to $\overline{EMA_BA[1:0]}$ invalid	(WH)*E-3	(WH)*E	(WH)*E+3	ns
22	$t_{su(EMAV-EMWEL)}$	Output setup time, $\overline{EMA_A[13:0]}$ valid to $\overline{EMA_WE}$ low	(WS)*E-3	(WS)*E	(WS)*E+3	ns
23	$t_{h(EMWEH-EMAIV)}$	Output hold time, $\overline{EMA_WE}$ high to $\overline{EMA_A[13:0]}$ invalid	(WH)*E-3	(WH)*E	(WH)*E+3	ns
24	$t_{w(EMWEL)}$	$\overline{EMA_WE}$ active low width (EW = 0)	(WST)*E-3	(WST)*E	(WST)*E+3	ns
		$\overline{EMA_WE}$ active low width (EW = 1)	(WST+(EWC*16))*E-3	(WST+(EWC*16))*E	(WST+(EWC*16))*E+3	ns
25	$t_{d(EMWAITH-EMWEH)}$	Delay time from EMA_WAIT deasserted to $\overline{EMA_WE}$ high	3E-3	4E	4E+3	ns
26	$t_{su(EMDV-EMWEL)}$	Output setup time, $\overline{EMA_D[15:0]}$ valid to $\overline{EMA_WE}$ low	(WS)*E-3	(WS)*E	(WS)*E+3	ns
27	$t_{h(EMWEH-EMDIV)}$	Output hold time, $\overline{EMA_WE}$ high to $\overline{EMA_D[15:0]}$ invalid	(WH)*E-3	(WH)*E	(WH)*E+3	ns

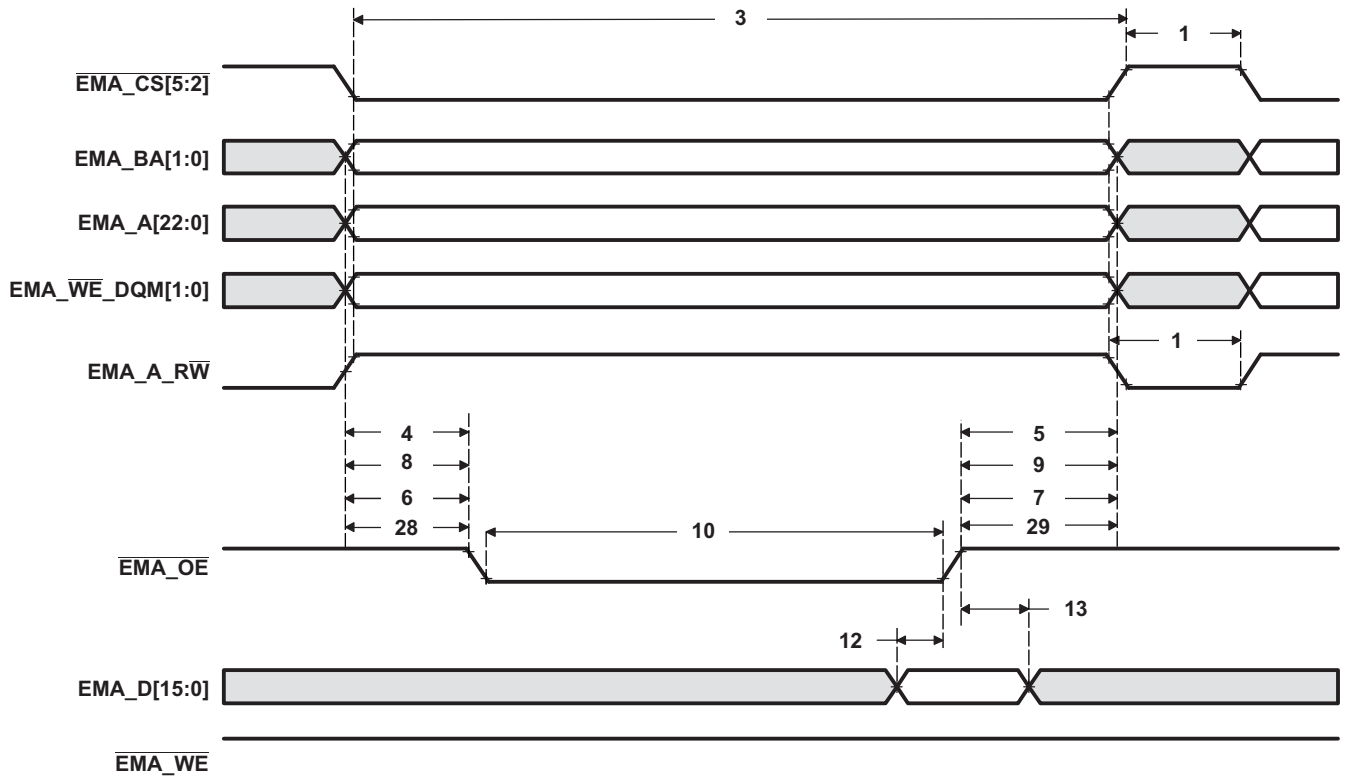

Figure 5-14. Asynchronous Memory Read Timing for EMIFA

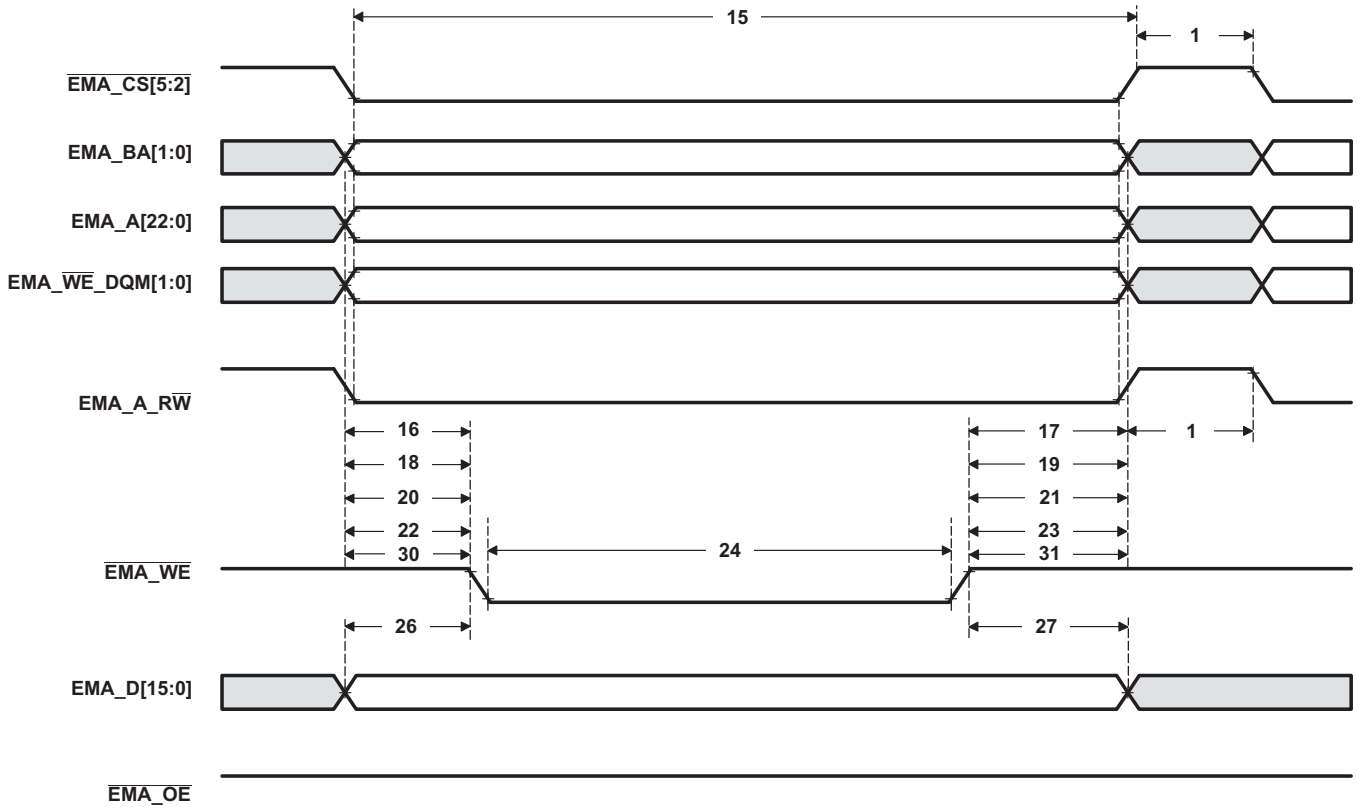

Figure 5-15. Asynchronous Memory Write Timing for EMIFA

Copyright © 2011–2013, Texas Instruments Incorporated

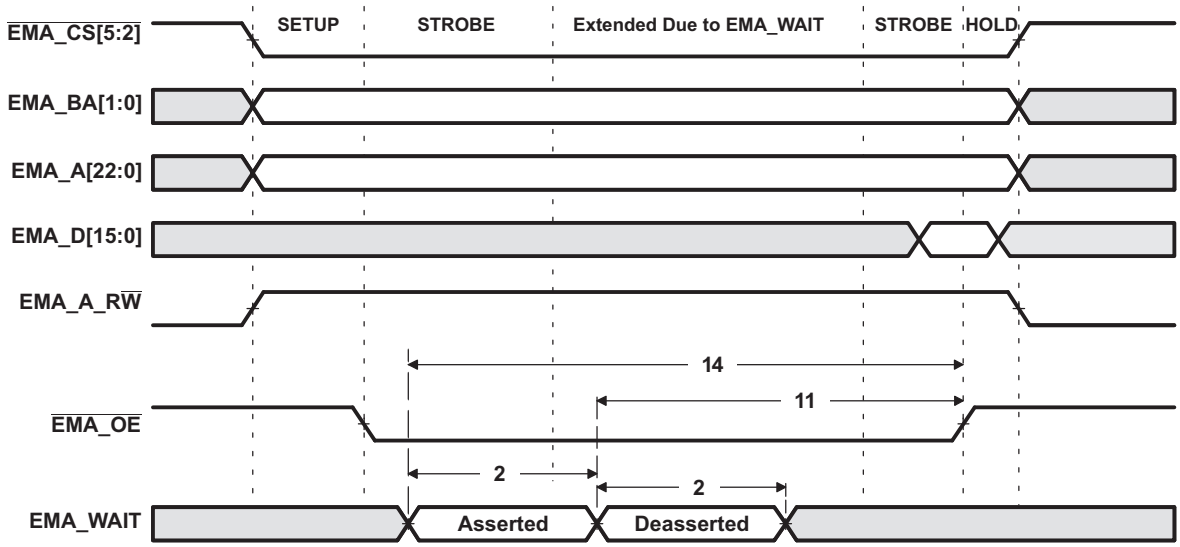

Figure 5-16. EMA_WAIT Read Timing Requirements

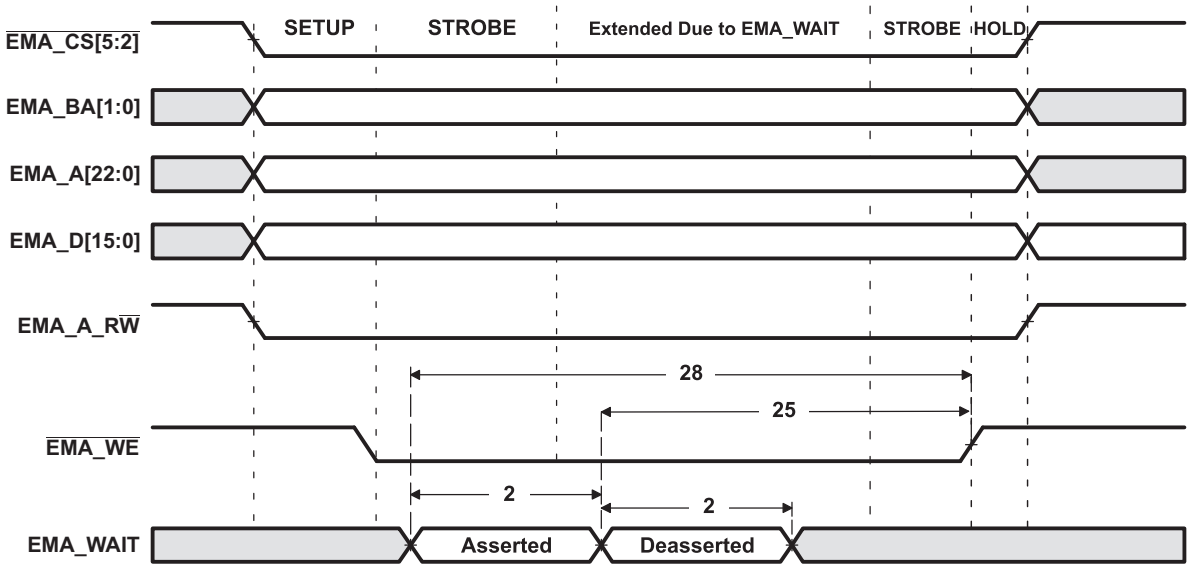

Figure 5-17. EMA_WAIT Write Timing Requirements

5.11 DDR2/mDDR Controller

The DDR2/mDDR Memory Controller is a dedicated interface to DDR2/mDDR SDRAM. It supports JESD79-2A standard compliant DDR2 SDRAM devices and compliant Mobile DDR SDRAM devices.

The DDR2/mDDR Memory Controller support the following features:

- JESD79-2A standard compliant DDR2 SDRAM
- Mobile DDR SDRAM
- 512 MByte memory space for DDR2
- 256 MByte memory space for mDDR
- CAS latencies:
  - DDR2: 2, 3, 4 and 5
  - mDDR: 2 and 3
- Internal banks:
  - DDR2: 1, 2, 4 and 8
  - mDDR:1, 2 and 4
- Burst length: 8
- Burst type: sequential
- 1 chip select (CS) signal
- Page sizes: 256, 512, 1024 and 2048
- SDRAM autoinitialization
- Self-refresh mode
- Partial array self-refresh (for mDDR)
- Power down mode
- Prioritized refresh
- Programmable refresh rate and backlog counter
- Programmable timing parameters
- Little endian

5.11.1 DDR2/mDDR Memory Controller Electrical Data/Timing

Table 5-25. Switching Characteristics Over Recommended Operating Conditions for DDR2/mDDR Memory Controller

No.	PARAMETER				1.3V, 1.2V		1.1V		1.0V		UNIT
					MIN	MAX	MIN	MAX	MIN	MAX	
1	$t_{c(DDR_CLK)}$	Cycle time, DDR_CLKP / DDR_CLKN	DDR2	72 degree DLL configuration	125	156	125	150	—(1)	—(1)	MHz
				90 degree DLL configuration	125	156	125	150	—(1)	—(1)	
			mDDR	72 degree DLL configuration	90	150	75	133	65	133	
				90 degree DLL configuration	105	150	100	133	95	133	

(1) DDR2 is not supported at this voltage operating point.

Copyright © 2011–2013, Texas Instruments Incorporated

5.11.2 DDR2/mDDR Controller Register Description(s)

Table 5-26. DDR2/mDDR Controller Registers

BYTE ADDRESS	ACRONYM	REGISTER DESCRIPTION
0xB000 0000	REVID	Revision ID Register
0xB000 0004	SDRSTAT	SDRAM Status Register
0xB000 0008	SDCR	SDRAM Configuration Register
0xB000 000C	SDRCR	SDRAM Refresh Control Register
0xB000 0010	SDTIMR1	SDRAM Timing Register 1
0xB000 0014	SDTIMR2	SDRAM Timing Register 2
0xB000 001C	SDCR2	SDRAM Configuration Register 2
0xB000 0020	PBBPR	Peripheral Bus Burst Priority Register
0xB000 0040	PC1	Performance Counter 1 Registers
0xB000 0044	PC2	Performance Counter 2 Register
0xB000 0048	PCC	Performance Counter Configuration Register
0xB000 004C	PCMRS	Performance Counter Master Region Select Register
0xB000 0050	PCT	Performance Counter Time Register
0xB000 00C0	IRR	Interrupt Raw Register
0xB000 00C4	IMR	Interrupt Mask Register
0xB000 00C8	IMSR	Interrupt Mask Set Register
0xB000 00CC	IMCR	Interrupt Mask Clear Register
0xB000 00E4	DRPYC1R	DDR PHY Control Register 1
0x01E2 C000	VTPIO_CTL	VTP IO Control Register

5.11.3 DDR2/mDDR Interface

This section provides the timing specification for the DDR2/mDDR interface as a PCB design and manufacturing specification. The design rules constrain PCB trace length, PCB trace skew, signal integrity, cross-talk, and signal timing. These rules, when followed, result in a reliable DDR2/mDDR memory system without the need for a complex timing closure process. For more information regarding guidelines for using this DDR2/mDDR specification, *Understanding TI's PCB Routing Rule-Based DDR2 Timing Specification* (SPRAAV0).

5.11.3.1 DDR2/mDDR Interface Schematic

Figure 5-18 shows the DDR2/mDDR interface schematic for a single-memory DDR2/mDDR system. The dual-memory system shown in Figure 5-19. Pin numbers for the device can be obtained from the pin description section.

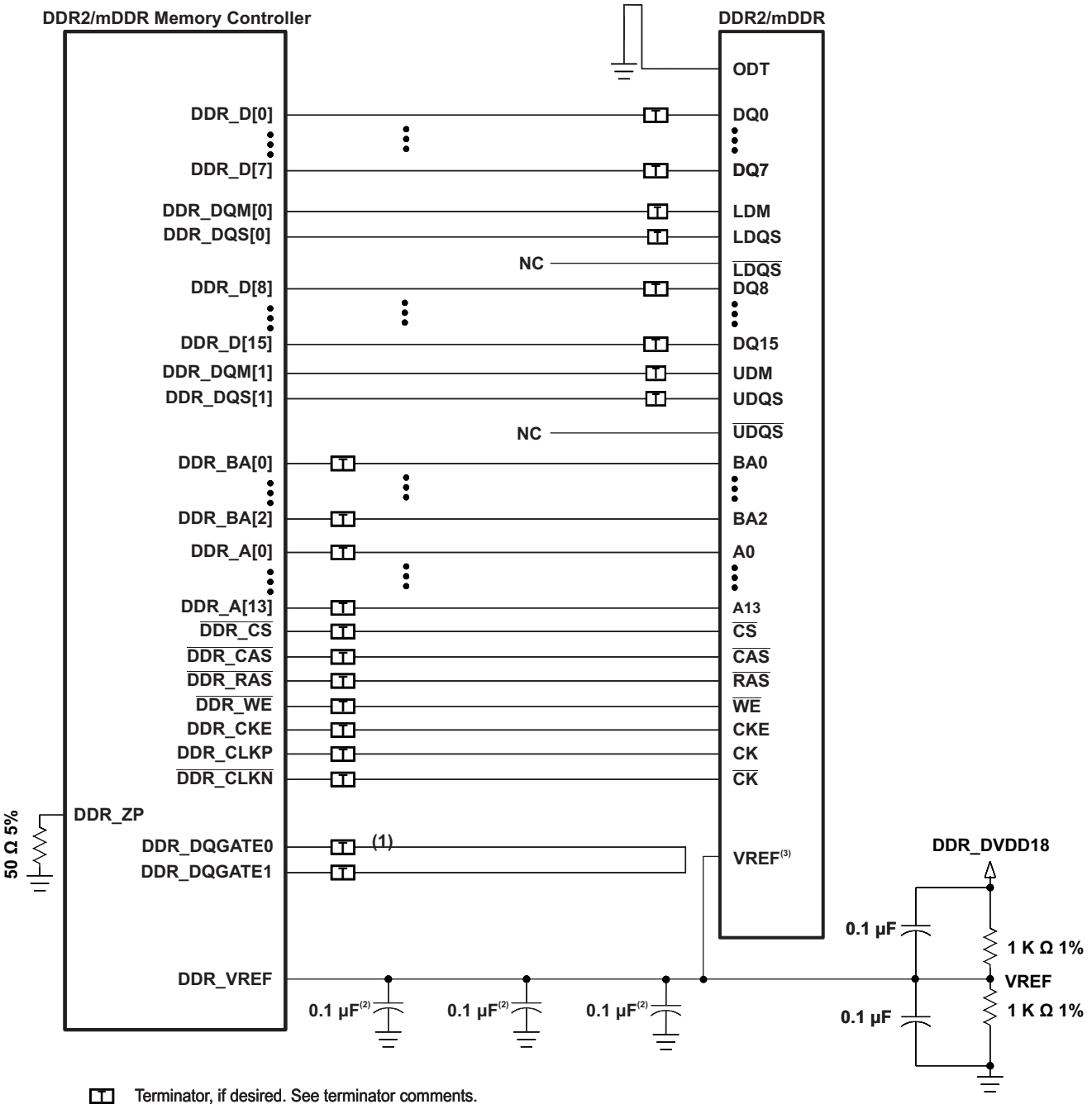

(1) See Figure 5-25 for DQGATE routing specifications.

(2) For DDR2, one of these capacitors can be eliminated if the divider and its capacitors are placed near a device VREF pin. For mDDR, these capacitors can be eliminated completely.

(3) VREF applies in the case of DDR2 memories. For mDDR, the DDR_VREF pin still needs to be connected to the divider circuit.

Figure 5-18. DDR2/mDDR Single-Memory High Level Schematic

Copyright © 2011–2013, Texas Instruments Incorporated

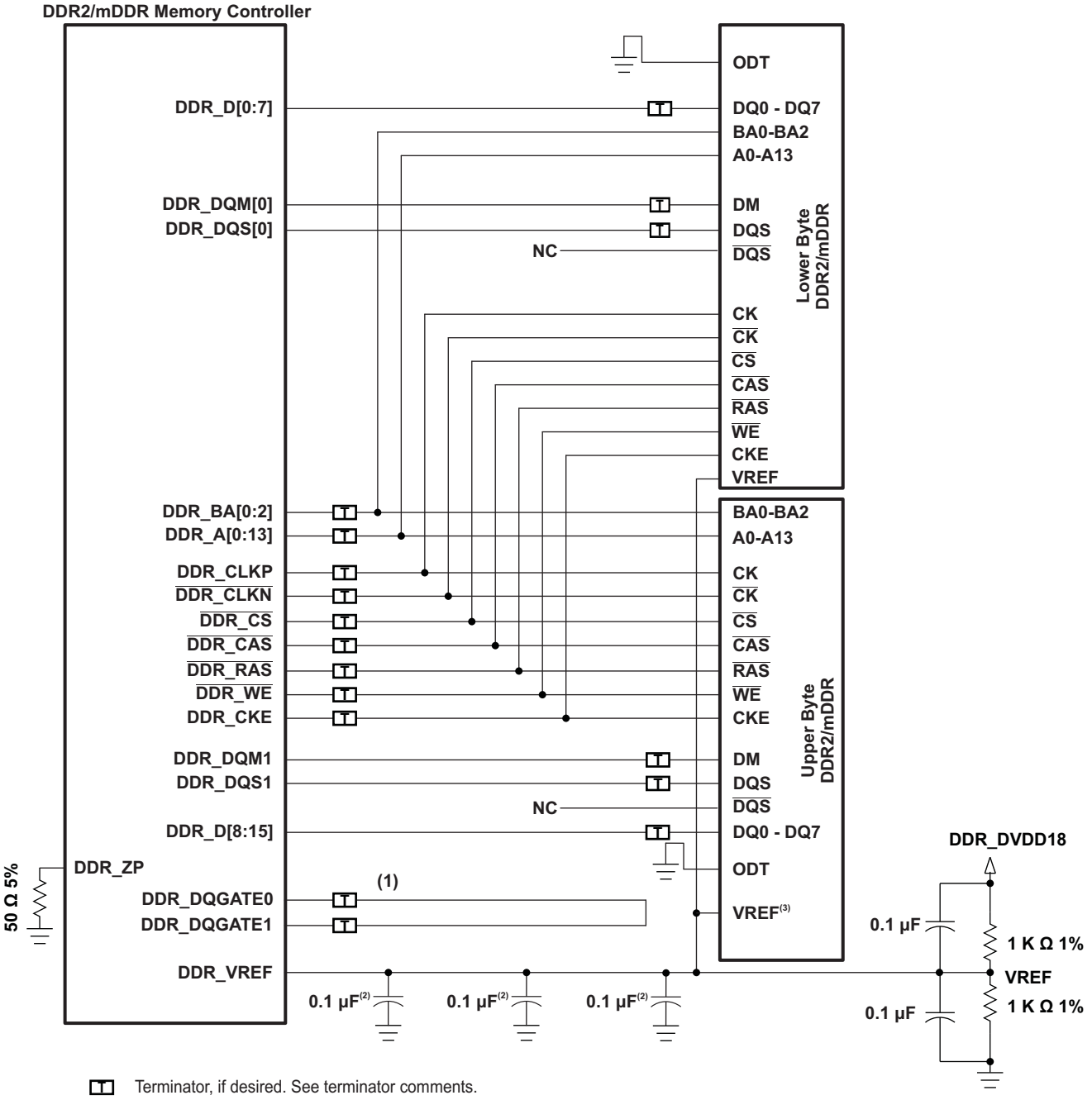

(1) See Figure 5-25 for DQGATE routing specifications.

(2) For DDR2, one of these capacitors can be eliminated if the divider and its capacitors are placed near a device VREF pin. For mDDR, these capacitors can be eliminated completely.

(3) VREF applies in the case of DDR2 memories. For mDDR, the DDR_VREF pin still needs to be connected to the divider circuit.

Figure 5-19. DDR2/mDDR Dual-Memory High Level Schematic

5.11.3.2 Compatible JEDEC DDR2/mDDR Devices

Table 5-27 shows the parameters of the JEDEC DDR2/mDDR devices that are compatible with this interface. Generally, the DDR2/mDDR interface is compatible with x16 DDR2/mDDR-400 speed grade DDR2/mDDR devices.

The device also supports JEDEC DDR2/mDDR x8 devices in the dual chip configuration. In this case, one chip supplies the upper byte and the second chip supplies the lower byte. Addresses and most control signals are shared just like regular dual chip memory configurations.

Table 5-27. Compatible JEDEC DDR2/mDDR Devices

No.	Parameter	Min	Max	Unit	Notes
1	JEDEC DDR2/mDDR Device Speed Grade	DDR2/mDDR-400			See Note (1)
2	JEDEC DDR2/mDDR Device Bit Width	x8	x16	Bits	
3	JEDEC DDR2/mDDR Device Count	1	2	Devices	See Note (2)

(1) Higher DDR2/mDDR speed grades are supported due to inherent JEDEC DDR2/mDDR backwards compatibility.
(2) Supported configurations are one 16-bit DDR2/mDDR memory or two 8-bit DDR2/mDDR memories

5.11.3.3 PCB Stackup

The minimum stackup required for routing the device is a six layer stack as shown in Table 5-28. Additional layers may be added to the PCB stack up to accommodate other circuitry or to reduce the size of the PCB footprint.Complete stack up specifications are provided in Table 5-29.

Table 5-28. Device Minimum PCB Stack Up

Layer	Type	Description
1	Signal	Top Routing Mostly Horizontal
2	Plane	Ground
3	Plane	Power
4	Signal	Internal Routing
5	Plane	Ground
6	Signal	Bottom Routing Mostly Vertical

Table 5-29. PCB Stack Up Specifications

No.	Parameter	Min	Typ	Max	Unit	Notes
1	PCB Routing/Plane Layers	6				
2	Signal Routing Layers	3				
3	Full ground layers under DDR2/mDDR routing region	2				
4	Number of ground plane cuts allowed within DDR routing region			0		
5	Number of ground reference planes required for each DDR2/mDDR routing layer	1				
6	Number of layers between DDR2/mDDR routing layer and reference ground plane			0		
7	PCB Routing Feature Size		4		Mils	
8	PCB Trace Width w		4		Mils	
8	PCB BGA escape via pad size		18		Mils	
9	PCB BGA escape via hole size		8		Mils	
10	SoC Device BGA pad size					See Note (1)
11	DDR2/mDDR Device BGA pad size					See Note (2)
12	Single Ended Impedance, Zo	50		75	Ω	
13	Impedance Control	Z-5	Z	Z+5	Ω	See Note (3)

(1) Please refer to the *Flip Chip Ball Grid Array Package Reference Guide* (SPRU811) for device BGA pad size.
(2) Please refer to the DDR2/mDDR device manufacturer documentation for the DDR2/mDDR device BGA pad size.
(3) Z is the nominal singled ended impedance selected for the PCB specified by item 12.

 Copyright © 2011–2013, Texas Instruments Incorporated

5.11.3.4 Placement

Figure 5-19 shows the required placement for the device as well as the DDR2/mDDR devices. The dimensions for Figure 5-20 are defined in Table 5-30. The placement does not restrict the side of the PCB that the devices are mounted on. The ultimate purpose of the placement is to limit the maximum trace lengths and allow for proper routing space. For single-memory DDR2/mDDR systems, the second DDR2/mDDR device is omitted from the placement.

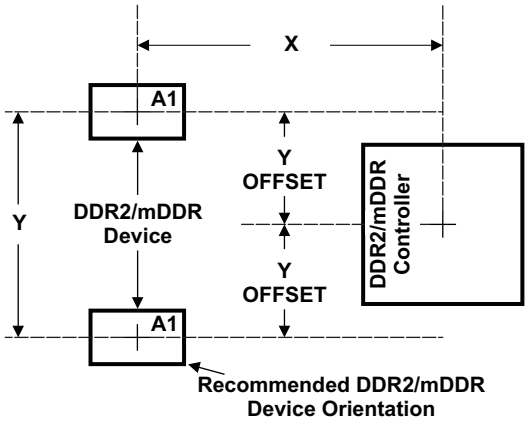

Figure 5-20. SMOMAPL138B and DDR2/mDDR Device Placement

Table 5-30. Placement Specifications

No.	Parameter	Min	Max	Unit	Notes
1	X		1750	Mils	See Notes (1), (2)
2	Y		1280	Mils	See Notes (1), (2)
3	Y Offset		650	Mils	See Notes (1). (2), (3)
4	Clearance from non-DDR2/mDDR signal to DDR2/mDDR Keepout Region	4		w (4)	See Note (5)

(1) See Figure 5-20 for dimension definitions.
(2) Measurements from center of device to center of DDR2/mDDR device.
(3) For single memory systems it is recommended that Y Offset be as small as possible.
(4) w = PCB trace width as defined in Table 5-29
(5) Non-DDR2/mDDR signals allowed within DDR2/mDDR keepout region provided they are separated from DDR2/mDDR routing layers by a ground plane.

5.11.3.5 DDR2/mDDR Keep Out Region

The region of the PCB used for the DDR2/mDDR circuitry must be isolated from other signals. The DDR2/mDDR keep out region is defined for this purpose and is shown in Figure 5-21. The size of this region varies with the placement and DDR routing. Additional clearances required for the keep out region are shown in Table 5-30.

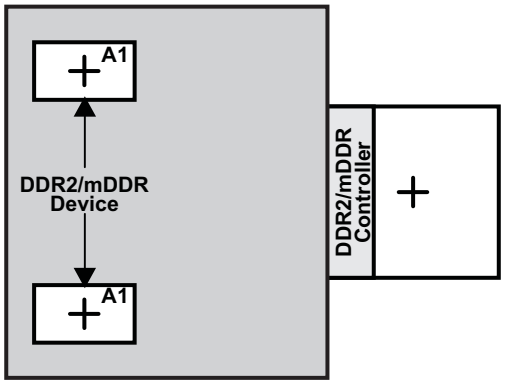

Region should encompass all DDR2/mDDR circuitry and varies depending on placement. Non-DDR2/mDDR signals should not be routed on the DDR signal layers within the DDR2/mDDR keep out region. Non-DDR2/mDDR signals may be routed in the region provided they are routed on layers separated from DDR2/mDDR signal layers by a ground layer. No breaks should be allowed in the reference ground layers in this region. In addition, the 1.8 V power plane should cover the entire keep out region.

Figure 5-21. DDR2/mDDR Keepout Region

Copyright © 2011–2013, Texas Instruments Incorporated

5.11.3.6 Bulk Bypass Capacitors

Bulk bypass capacitors are required for moderate speed bypassing of the DDR2/mDDR and other circuitry. Table 5-31 contains the minimum numbers and capacitance required for the bulk bypass capacitors. Note that this table only covers the bypass needs of the Soc and DDR2/mDDR interfaces. Additional bulk bypass capacitance may be needed for other circuitry.

Table 5-31. Bulk Bypass Capacitors

No.	Parameter	Min	Max	Unit	Notes
1	DDR_DVDD18 Supply Bulk Bypass Capacitor Count	3		Devices	See Note (1)
2	DDR_DVDD18 Supply Bulk Bypass Total Capacitance	30		µF	
3	DDR#1 Bulk Bypass Capacitor Count	1		Devices	See Note (1)
4	DDR#1 Bulk Bypass Total Capacitance	22		µF	
5	DDR#2 Bulk Bypass Capacitor Count	1		Devices	See Notes (1), (2)
6	DDR#2 Bulk Bypass Total Capacitance	22		µF	See Note (2)

(1) These devices should be placed near the device they are bypassing, but preference should be given to the placement of the high-speed (HS) bypass caps.
(2) Only used on dual-memory systems

5.11.3.7 High-Speed Bypass Capacitors

High-speed (HS) bypass capacitors are critical for proper DDR2/mDDR interface operation. It is particularly important to minimize the parasitic series inductance of the HS bypass cap, Soc /DDR2/mDDR power, and Soc /DDR2/mDDR ground connections. Table 5-32 contains the specification for the HS bypass capacitors as well as for the power connections on the PCB.

Table 5-32. High-Speed Bypass Capacitors

No.	Parameter	Min	Max	Unit	Notes
1	HS Bypass Capacitor Package Size		0402	10 Mils	See Note (1)
2	Distance from HS bypass capacitor to device being bypassed		250	Mils	
3	Number of connection vias for each HS bypass capacitor	2		Vias	See Note (2)
4	Trace length from bypass capacitor contact to connection via	1	30	Mils	
5	Number of connection vias for each DDR2/mDDR device power or ground balls	1		Vias	
6	Trace length from DDR2/mDDR device power ball to connection via		35	Mils	
7	DDR_DVDD18 Supply HS Bypass Capacitor Count	10		Devices	See Note (3)
8	DDR_DVDD18 Supply HS Bypass Capacitor Total Capacitance	0.6		µF	
9	DDR#1 HS Bypass Capacitor Count	8		Devices	See Note (3)
10	DDR#1 HS Bypass Capacitor Total Capacitance	0.4		µF	
11	DDR#2 HS Bypass Capacitor Count	8		Devices	See Notes (3), (4)
12	DDR#2 HS Bypass Capacitor Total Capacitance	0.4		µF	See Note (4)

(1) LxW, 10 mil units, i.e., a 0402 is a 40x20 mil surface mount capacitor
(2) An additional HS bypass capacitor can share the connection vias only if it is mounted on the opposite side of the board.
(3) These devices should be placed as close as possible to the device being bypassed.
(4) Only used on dual-memory systems

5.11.3.8 Net Classes

Table 5-33 lists the clock net classes for the DDR2/mDDR interface. Table 5-34 lists the signal net classes, and associated clock net classes, for the signals in the DDR2/mDDR interface. These net classes are used for the termination and routing rules that follow.

Table 5-33. Clock Net Class Definitions

Clock Net Class	Soc Pin Names
CK	DDR_CLKP / $\overline{\text{DDR_CLKN}}$
DQS0	DDR_DQS[0]
DQS1	DDR_DQS[1]

Table 5-34. Signal Net Class Definitions

Signal Net Class	Associated Clock Net Class	Soc Pin Names
ADDR_CTRL	CK	DDR_BA[2:0], DDR_A[13:0], $\overline{\text{DDR_CS}}$, $\overline{\text{DDR_CAS}}$, $\overline{\text{DDR_RAS}}$, $\overline{\text{DDR_WE}}$, DDR_CKE
D0	DQS0	DDR_D[7:0], DDR_DQM0
D1	DQS1	DDR_D[15:8], DDR_DQM1
DQGATE	CK, DQS0, DQS1	DDR_DQGATE0, DDR_DQGATE1

5.11.3.9 DDR2/mDDR Signal Termination

No terminations of any kind are required in order to meet signal integrity and overshoot requirements. Serial terminators are permitted, if desired, to reduce EMI risk; however, serial terminations are the only type permitted. Table 5-35 shows the specifications for the series terminators.

Table 5-35. DDR2/mDDR Signal Terminations

No.	Parameter	Min	Typ	Max	Unit	Notes
1	CK Net Class	0		10	Ω	See Note (1)
2	ADDR_CTRL Net Class	0	22	Zo	Ω	See Notes (1), (2), (3)
3	Data Byte Net Classes (DQS[0], DQS[1], D0, D1)	0	22	Zo	Ω	See Notes (1), (2), (3), (4)
4	DQGATE Net Class (DQGATE)	0	10	Zo	Ω	See Notes (1), (2), (3)

(1) Only series termination is permitted, parallel or SST specifically disallowed.
(2) Terminator values larger than typical only recommended to address EMI issues.
(3) Termination value should be uniform across net class.
(4) When no termination is used on data lines (0 Ω), the DDR2/mDDR devices must be programmed to operate in 60% strength mode.

 Copyright © 2011–2013, Texas Instruments Incorporated

5.11.3.10 VREF Routing

VREF is used as a reference by the input buffers of the DDR2/mDDR memories as well as the SMOMAPL138B . VREF is intended to be half the DDR2/mDDR power supply voltage and should be created using a resistive divider as shown in Figure 5-18. Other methods of creating VREF are not recommended. Figure 5-22 shows the layout guidelines for VREF.

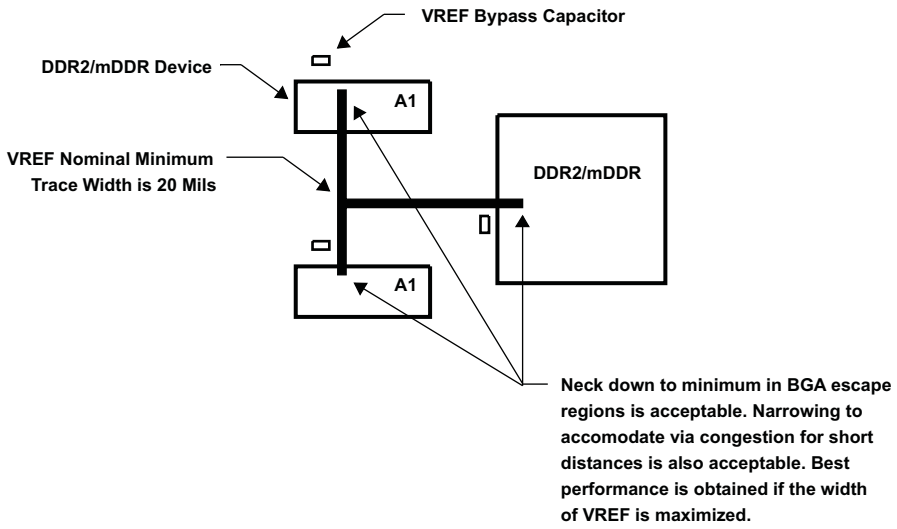

Figure 5-22. VREF Routing and Topology

5.11.3.11 DDR2/mDDR CK and ADDR_CTRL Routing

Figure 5-23 shows the topology of the routing for the CK and ADDR_CTRL net classes. The route is a balanced *T* as it is intended that the length of segments B and C be equal. In addition, the length of A should be maximized.

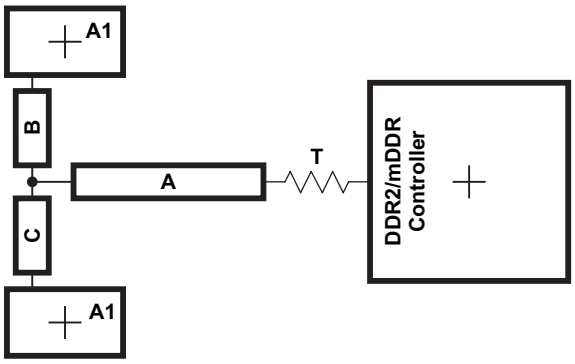

Figure 5-23. CK and ADDR_CTRL Routing and Topology

Table 5-36. CK and ADDR_CTRL Routing Specification

No.	Parameter	Min	Typ	Max	Unit	Notes
1	Center to Center CK-CKN Spacing			2w (1)		
2	CK A to B/A to C Skew Length Mismatch			25	Mils	See Note (2)
3	CK B to C Skew Length Mismatch			25	Mils	
4	Center to center CK to other DDR2/mDDR trace spacing	4w (1)				See Note (3)
5	CK/ADDR_CTRL nominal trace length	CACLM-50	CACLM	CACLM+50	Mils	See Note (4)
6	ADDR_CTRL to CK Skew Length Mismatch			100	Mils	
7	ADDR_CTRL to ADDR_CTRL Skew Length Mismatch			100	Mils	
8	Center to center ADDR_CTRL to other DDR2/mDDR trace spacing	4w (1)				See Note (3)
9	Center to center ADDR_CTRL to other ADDR_CTRL trace spacing	3w (1)				See Note (3)
10	ADDR_CTRL A to B/A to C Skew Length Mismatch			100	Mils	See Note (2)
11	ADDR_CTRL B to C Skew Length Mismatch			100	Mils	

(1) w = PCB trace width as defined in Table 5-29.
(2) Series terminator, if used, should be located closest to Soc .
(3) Center to center spacing is allowed to fall to minimum (w) for up to 500 mils of routed length to accommodate BGA escape and routing congestion.
(4) CACLM is the longest Manhattan distance of the CK and ADDR_CTRL net classes.

 Copyright © 2011–2013, Texas Instruments Incorporated

Figure 5-24 shows the topology and routing for the DQS and D net class; the routes are point to point. Skew matching across bytes is not needed nor recommended.

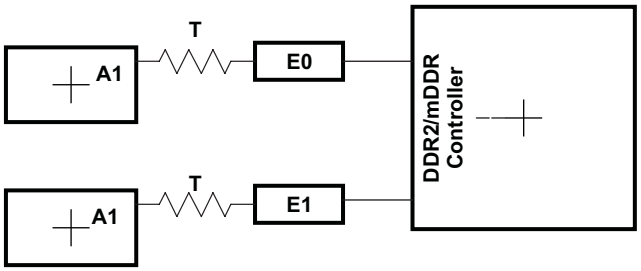

Figure 5-24. DQS and D Routing and Topology

Table 5-37. DQS and D Routing Specification

No.	Parameter	Min	Typ	Max	Unit	Notes
1	Center to center DQS to other DDR2/mDDR trace spacing	4w (1)				See Note (2)
2	DQS/D nominal trace length	DQLM-50	DQLM	DQLM+50	Mils	See Notes (3), (4)
3	D to DQS Skew Length Mismatch			100	Mils	See Note (4)
4	D to D Skew Length Mismatch			100	Mils	See Note (4)
5	Center to center D to other DDR2/mDDR trace spacing	4w (1)				See Notes (2), (5)
6	Center to Center D to other D trace spacing	3w (1)				See Notes (6), (2)

(1) w = PCB trace width as defined in Table 5-29
(2) Center to center spacing is allowed to fall to minimum (w) for up to 500 mils of routed length to accommodate BGA escape and routing congestion.
(3) Series terminator, if used, should be located closest to DDR.
(4) There is no need and it is not recommended to skew match across data bytes, i.e., from DQS0 and data byte 0 to DQS1 and data byte 1.
(5) D's from other DQS domains are considered *other DDR2/mDDR trace*.
(6) DQLM is the longest Manhattan distance of each of the DQS and D net class.

Figure 5-25 shows the routing for the DQGATE net class. Table 5-38 contains the routing specification.

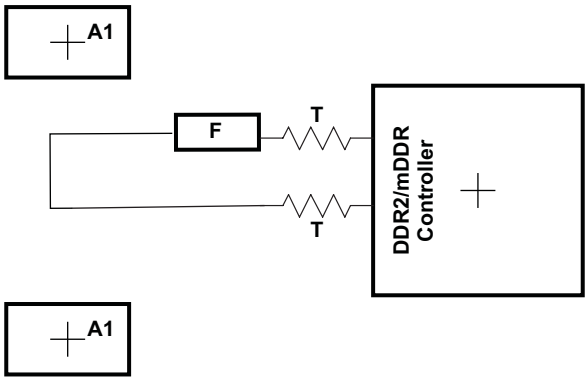

Figure 5-25. DQGATE Routing

Table 5-38. DQGATE Routing Specification

No.	Parameter	Min	Typ	Max	Unit	Notes
1	DQGATE Length F		CKB0B1			See Note (1)
2	Center to center DQGATE to any other trace spacing	4w (2)				
3	DQS/D nominal trace length	DQLM-50	DQLM	DQLM+50	Mils	
4	DQGATE Skew			100	Mils	See Note (3)

(1) CKB0B1 is the sum of the length of the CK net plus the average length of the DQS0 and DQS1 nets.
(2) w = PCB trace width as defined in Table 5-29
(3) Skew from CKB0B1

5.11.3.12 MDDR/DDR2 Boundary Scan Limitations

Due to DDR implementation and timing restrictions, it was not possible to place boundary scan cells between core logic and the IO like boundary scan cells for other IO. Instead, the boundary scan cells are tapped-off to the DDR PHY and there is the equivalent of a multiplexer inside the DDR PHY which selects between functional and boundary scan paths.

The implication for boundary scan is that the DDR pins will not support the SAMPLE function of the output enable cells on the DDR pins and this is a violation of IEEE 1149.1. Full EXTEST and PRELOAD capability is still available.

 Copyright © 2011–2013, Texas Instruments Incorporated

5.12 Memory Protection Units

The MPU performs memory protection checking. It receives requests from a bus master in the system and checks the address against the fixed and programmable regions to see if the access is allowed. If allowed, the transfer is passed unmodified to its output bus (to the targeted address). If the transfer is illegal (fails the protection check) then the MPU does not pass the transfer to the output bus but rather services the transfer internally back to the input bus (to prevent a hang) returning the fault status to the requestor as well as generating an interrupt about the fault. The following features are supported by the MPU:

- Provides memory protection for fixed and programmable address ranges.
- Supports multiple programmable address region.
- Supports secure and debug access privileges.
- Supports read, write, and execute access privileges.
- Supports privid(8) associations with ranges.
- Generates an interrupt when there is a protection violation, and saves violating transfer parameters.
- MMR access is also protected.

Table 5-39. MPU1 Configuration Registers

MPU1 BYTE ADDRESS	ACRONYM	REGISTER DESCRIPTION
0x01E1 4000	REVID	Revision ID
0x01E1 4004	CONFIG	Configuration
0x01E1 4010	IRAWSTAT	Interrupt raw status/set
0x01E1 4014	IENSTAT	Interrupt enable status/clear
0x01E1 4018	IENSET	Interrupt enable
0x01E1 401C	IENCLR	Interrupt enable clear
0x01E1 4020 - 0x01E1 41FF	-	Reserved
0x01E1 4200	PROG1_MPSAR	Programmable range 1, start address
0x01E1 4204	PROG1_MPEAR	Programmable range 1, end address
0x01E1 4208	PROG1_MPPA	Programmable range 1, memory page protection attributes
0x01E1 420C - 0x01E1 420F	-	Reserved
0x01E1 4210	PROG2_MPSAR	Programmable range 2, start address
0x01E1 4214	PROG2_MPEAR	Programmable range 2, end address
0x01E1 4218	PROG2_MPPA	Programmable range 2, memory page protection attributes
0x01E1 421C - 0x01E1 421F	-	Reserved
0x01E1 4220	PROG3_MPSAR	Programmable range 3, start address
0x01E1 4224	PROG3_MPEAR	Programmable range 3, end address
0x01E1 4228	PROG3_MPPA	Programmable range 3, memory page protection attributes
0x01E1 422C - 0x01E1 422F	-	Reserved
0x01E1 4230	PROG4_MPSAR	Programmable range 4, start address
0x01E1 4234	PROG4_MPEAR	Programmable range 4, end address
0x01E1 4238	PROG4_MPPA	Programmable range 4, memory page protection attributes
0x01E1 423C - 0x01E1 423F	-	Reserved
0x01E1 4240	PROG5_MPSAR	Programmable range 5, start address
0x01E1 4244	PROG5_MPEAR	Programmable range 5, end address
0x01E1 4248	PROG5_MPPA	Programmable range 5, memory page protection attributes
0x01E1 424C - 0x01E1 424F	-	Reserved
0x01E1 4250	PROG6_MPSAR	Programmable range 6, start address
0x01E1 4254	PROG6_MPEAR	Programmable range 6, end address
0x01E1 4258	PROG6_MPPA	Programmable range 6, memory page protection attributes
0x01E1 425C - 0x01E1 42FF	-	Reserved

Copyright © 2011–2013, Texas Instruments Incorporated

Table 5-39. MPU1 Configuration Registers (continued)

MPU1 BYTE ADDRESS	ACRONYM	REGISTER DESCRIPTION
0x01E1 4300	FLTADDRR	Fault address
0x01E1 4304	FLTSTAT	Fault status
0x01E1 4308	FLTCLR	Fault clear
0x01E1 430C - 0x01E1 4FFF	-	Reserved

Table 5-40. MPU2 Configuration Registers

MPU2 BYTE ADDRESS	ACRONYM	REGISTER DESCRIPTION
0x01E1 5000	REVID	Revision ID
0x01E1 5004	CONFIG	Configuration
0x01E1 5010	IRAWSTAT	Interrupt raw status/set
0x01E1 5014	IENSTAT	Interrupt enable status/clear
0x01E1 5018	IENSET	Interrupt enable
0x01E1 501C	IENCLR	Interrupt enable clear
0x01E1 5020 - 0x01E1 51FF	-	Reserved
0x01E1 5200	PROG1_MPSAR	Programmable range 1, start address
0x01E1 5204	PROG1_MPEAR	Programmable range 1, end address
0x01E1 5208	PROG1_MPPA	Programmable range 1, memory page protection attributes
0x01E1 520C - 0x01E1 520F	-	Reserved
0x01E1 5210	PROG2_MPSAR	Programmable range 2, start address
0x01E1 5214	PROG2_MPEAR	Programmable range 2, end address
0x01E1 5218	PROG2_MPPA	Programmable range 2, memory page protection attributes
0x01E1 521C - 0x01E1 521F	-	Reserved
0x01E1 5220	PROG3_MPSAR	Programmable range 3, start address
0x01E1 5224	PROG3_MPEAR	Programmable range 3, end address
0x01E1 5228	PROG3_MPPA	Programmable range 3, memory page protection attributes
0x01E1 522C - 0x01E1 522F	-	Reserved
0x01E1 5230	PROG4_MPSAR	Programmable range 4, start address
0x01E1 5234	PROG4_MPEAR	Programmable range 4, end address
0x01E1 5238	PROG4_MPPA	Programmable range 4, memory page protection attributes
0x01E1 523C - 0x01E1 523F	-	Reserved
0x01E1 5240	PROG5_MPSAR	Programmable range 5, start address
0x01E1 5244	PROG5_MPEAR	Programmable range 5, end address
0x01E1 5248	PROG5_MPPA	Programmable range 5, memory page protection attributes
0x01E1 524C - 0x01E1 524F	-	Reserved
0x01E1 5250	PROG6_MPSAR	Programmable range 6, start address
0x01E1 5254	PROG6_MPEAR	Programmable range 6, end address
0x01E1 5258	PROG6_MPPA	Programmable range 6, memory page protection attributes
0x01E1 525C - 0x01E1 525F	-	Reserved
0x01E1 5260	PROG7_MPSAR	Programmable range 7, start address
0x01E1 5264	PROG7_MPEAR	Programmable range 7, end address
0x01E1 5268	PROG7_MPPA	Programmable range 7, memory page protection attributes
0x01E1 526C - 0x01E1 526F	-	Reserved
0x01E1 5270	PROG8_MPSAR	Programmable range 8, start address
0x01E1 5274	PROG8_MPEAR	Programmable range 8, end address
0x01E1 5278	PROG8_MPPA	Programmable range 8, memory page protection attributes
0x01E1 527C - 0x01E1 527F	-	Reserved

 Copyright © 2011–2013, Texas Instruments Incorporated

Table 5-40. MPU2 Configuration Registers (continued)

MPU2 BYTE ADDRESS	ACRONYM	REGISTER DESCRIPTION
0x01E1 5280	PROG9_MPSAR	Programmable range 9, start address
0x01E1 5284	PROG9_MPEAR	Programmable range 9, end address
0x01E1 5288	PROG9_MPPA	Programmable range 9, memory page protection attributes
0x01E1 528C - 0x01E1 528F	-	Reserved
0x01E1 5290	PROG10_MPSAR	Programmable range 10, start address
0x01E1 5294	PROG10_MPEAR	Programmable range 10, end address
0x01E1 5298	PROG10_MPPA	Programmable range 10, memory page protection attributes
0x01E1 529C - 0x01E1 529F	-	Reserved
0x01E1 52A0	PROG11_MPSAR	Programmable range 11, start address
0x01E1 52A4	PROG11_MPEAR	Programmable range 11, end address
0x01E1 52A8	PROG11_MPPA	Programmable range 11, memory page protection attributes
0x01E1 52AC - 0x01E1 52AF	-	Reserved
0x01E1 52B0	PROG12_MPSAR	Programmable range 12, start address
0x01E1 52B4	PROG12_MPEAR	Programmable range 12, end address
0x01E1 52B8	PROG12_MPPA	Programmable range 12, memory page protection attributes
0x01E1 52BC - 0x01E1 52FF	-	Reserved
0x01E1 5300	FLTADDRR	Fault address
0x01E1 5304	FLTSTAT	Fault status
0x01E1 5308	FLTCLR	Fault clear
0x01E1 530C - 0x01E1 5FFF	-	Reserved

Copyright © 2011–2013, Texas Instruments Incorporated

5.13 MMC / SD / SDIO (MMCSD0, MMCSD1)

5.13.1 MMCSD Peripheral Description

The device includes an two MMCSD controllers which are compliant with MMC V4.0, Secure Digital Part 1 Physical Layer Specification V1.1 and Secure Digital Input Output (SDIO) V2.0 specifications.

The MMC/SD Controller have following features:

- MultiMediaCard (MMC).
- Secure Digital (SD) Memory Card.
- MMC/SD protocol support.
- SDIO protocol support.
- Programmable clock frequency.
- 512 bit Read/Write FIFO to lower system overhead.
- Slave EDMA transfer capability.

The device MMC/SD Controller does not support SPI mode.

5.13.2 MMCSD Peripheral Register Description(s)

Table 5-41. Multimedia Card/Secure Digital (MMC/SD) Card Controller Registers

MMCSD0 BYTE ADDRESS	MMCSD1 BYTE ADDRESS	ACRONYM	REGISTER DESCSRIPTION
0x01C4 0000	0x01E1 B000	MMCCTL	MMC Control Register
0x01C4 0004	0x01E1 B004	MMCCLK	MMC Memory Clock Control Register
0x01C4 0008	0x01E1 B008	MMCST0	MMC Status Register 0
0x01C4 000C	0x01E1 B00C	MMCST1	MMC Status Register 1
0x01C4 0010	0x01E1 B010	MMCIM	MMC Interrupt Mask Register
0x01C4 0014	0x01E1 B014	MMCTOR	MMC Response Time-Out Register
0x01C4 0018	0x01E1 B018	MMCTOD	MMC Data Read Time-Out Register
0x01C4 001C	0x01E1 B01C	MMCBLEN	MMC Block Length Register
0x01C4 0020	0x01E1 B020	MMCNBLK	MMC Number of Blocks Register
0x01C4 0024	0x01E1 B024	MMCNBLC	MMC Number of Blocks Counter Register
0x01C4 0028	0x01E1 B028	MMCDRR	MMC Data Receive Register
0x01C4 002C	0x01E1 B02C	MMCDXR	MMC Data Transmit Register
0x01C4 0030	0x01E1 B030	MMCCMD	MMC Command Register
0x01C4 0034	0x01E1 B034	MMCARGHL	MMC Argument Register
0x01C4 0038	0x01E1 B038	MMCRSP01	MMC Response Register 0 and 1
0x01C4 003C	0x01E1 B03C	MMCRSP23	MMC Response Register 2 and 3
0x01C4 0040	0x01E1 B040	MMCRSP45	MMC Response Register 4 and 5
0x01C4 0044	0x01E1 B044	MMCRSP67	MMC Response Register 6 and 7
0x01C4 0048	0x01E1 B048	MMCDRSP	MMC Data Response Register
0x01C4 0050	0x01E1 B050	MMCCIDX	MMC Command Index Register
0x01C4 0064	0x01E1 B064	SDIOCTL	SDIO Control Register
0x01C4 0068	0x01E1 B068	SDIOST0	SDIO Status Register 0
0x01C4 006C	0x01E1 B06C	SDIOIEN	SDIO Interrupt Enable Register
0x01C4 0070	0x01E1 B070	SDIOIST	SDIO Interrupt Status Register
0x01C4 0074	0x01E1 B074	MMCFIFOCTL	MMC FIFO Control Register

Copyright © 2011–2013, Texas Instruments Incorporated

5.13.3 MMC/SD Electrical Data/Timing

Table 5-42 through Table 5-43 assume testing over recommended operating conditions.

Table 5-42. Timing Requirements for MMC/SD (see Figure 5-27 and Figure 5-29)

NO.	PARAMETER		1.3V, 1.2V		1.1V		1.0V		UNIT
			MIN	MAX	MIN	MAX	MIN	MAX	
1	$t_{su(CMDV-CLKH)}$	Setup time, MMCSD_CMD valid before MMCSD_CLK high	4		4		6		ns
2	$t_{h(CLKH-CMDV)}$	Hold time, MMCSD_CMD valid after MMCSD_CLK high	2.5		2.5		2.5		ns
3	$t_{su(DATV-CLKH)}$	Setup time, MMCSD_DATx valid before MMCSD_CLK high	4.5		5		6		ns
4	$t_{h(CLKH-DATV)}$	Hold time, MMCSD_DATx valid after MMCSD_CLK high	2.5		2.5		2.5		ns

Table 5-43. Switching Characteristics for MMC/SD (see Figure 5-26 through Figure 5-29)

NO.	PARAMETER		1.3V, 1.2V		1.1V		1.0V		UNIT
			MIN	MAX	MIN	MAX	MIN	MAX	
7	$f_{(CLK)}$	Operating frequency, MMCSD_CLK	0	52	0	50	0	25	MHz
8	$f_{(CLK_ID)}$	Identification mode frequency, MMCSD_CLK	0	400	0	400	0	400	KHz
9	$t_{W(CLKL)}$	Pulse width, MMCSD_CLK low	6.5		6.5		10		ns
10	$t_{W(CLKH)}$	Pulse width, MMCSD_CLK high	6.5		6.5		10		ns
11	$t_{r(CLK)}$	Rise time, MMCSD_CLK		3		3		10	ns
12	$t_{f(CLK)}$	Fall time, MMCSD_CLK		3		3		10	ns
13	$t_{d(CLKL-CMD)}$	Delay time, MMCSD_CLK low to MMCSD_CMD transition	-4	2.5	-4	3	-4	4	ns
14	$t_{d(CLKL-DAT)}$	Delay time, MMCSD_CLK low to MMCSD_DATx transition	-4	3.3	-4	3.5	-4	4	ns

Copyright © 2011–2013, Texas Instruments Incorporated

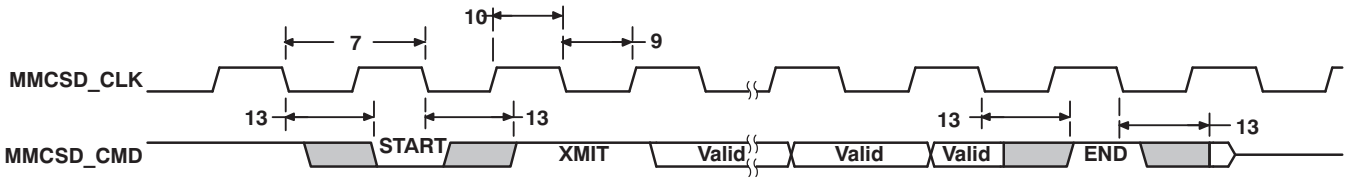

Figure 5-26. MMC/SD Host Command Timing

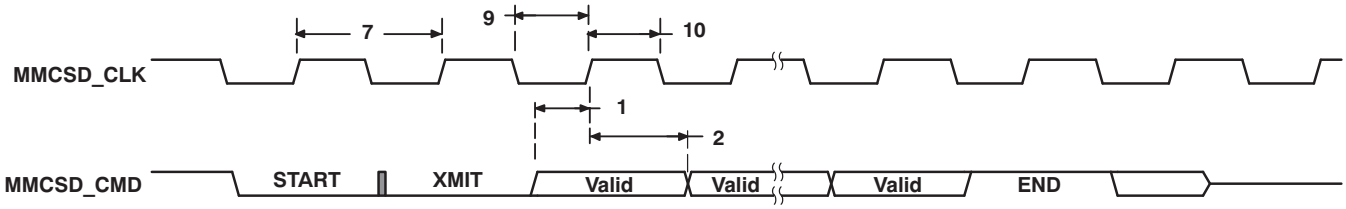

Figure 5-27. MMC/SD Card Response Timing

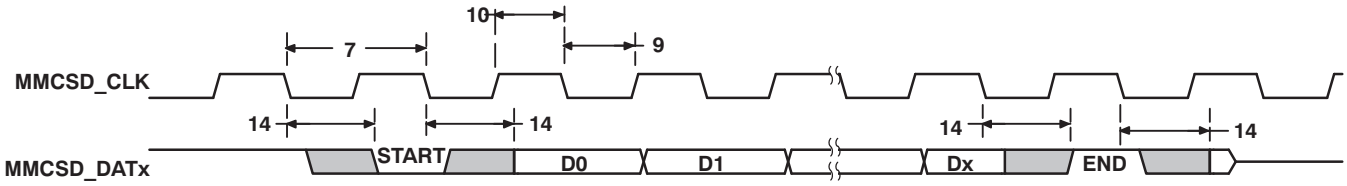

Figure 5-28. MMC/SD Host Write Timing

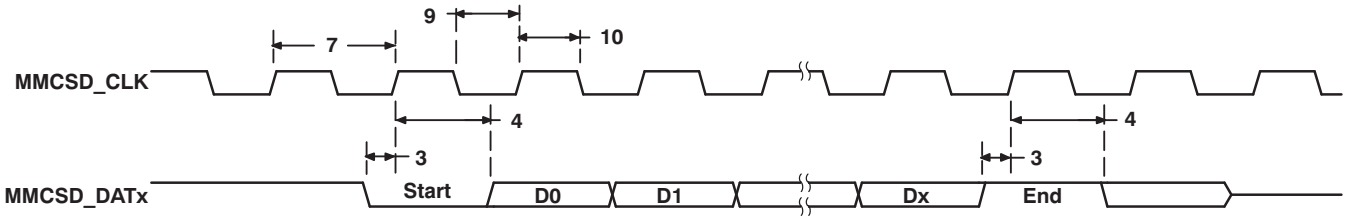

Figure 5-29. MMC/SD Host Read and Card CRC Status Timing

Copyright © 2011–2013, Texas Instruments Incorporated

5.14 Serial ATA Controller (SATA)

The Serial ATA Controller (SATA) provides a single HBA port operating in AHCI mode and is used to interface to data storage devices at both 1.5 Gbits/second and 3.0 Gbits/second line speeds. AHCI describes a system memory structure that contains a generic area for control and status, and a table of entries describing a command list where each command list entry contains information necessary to program an SATA device, and a pointer to a descriptor table for transferring data between system memory and the device.

The SATA Controller supports the following features:

- Serial ATA 1.5 Gbps (Gen 1i) and 3 Gbps (Gen 2i) line speeds
- Support for the AHCI controller spec 1.1
- Integrated SERDES PHY
- Integrated Rx and Tx data buffers
- Supports all SATA power management features
- Internal DMA engine per port
- Hardware-assisted native command queuing (NCQ) for up to 32 entries
- 32-bit addressing
- Supports port multiplier with command-based switching
- Activity LED support
- Mechanical presence switch
- Cold presence detect

The SATA Controller support is dependent on the CPU voltage operating point:

- At CVDD = 1.3V, SATA Gen 2i (3.0 Gbps) and SATA Gen 1i (1.5 Gbps) are supported.
- At CVDD = 1.2V, SATA Gen 2i (3.0 Gbps) and SATA Gen 1i (1.5 Gbps) are supported.
- At CVDD = 1.1V, SATA Gen 1i (1.5 Gbps) only is supported.
- At CVDD = 1.0V, SATA is not supported.

5.14.1 SATA Register Descriptions

Table 5-44 is a list of the SATA Controller registers.

Table 5-44. SATA Controller Registers

BYTE ADDRESS	ACRONYM	REGISTER DESCRIPTION
0x01E1 8000	CAP	HBA Capabilities Register
0x01E1 8004	GHC	Global HBA Control Register
0x01E1 8008	IS	Interrupt Status Register
0x01E1 800C	PI	Ports Implemented Register
0x01E1 8010	VS	AHCI Version Register
0x01E1 8014	CCC_CTL	Command Completion Coalescing Control Register
0x01E1 8018	CCC_PORTS	Command Completion Coalescing Ports Register
0x01E1 80A0	BISTAFR	BIST Active FIS Register
0x01E1 80A4	BISTCR	BIST Control Register
0x01E1 80A8	BISTFCTR	BIST FIS Count Register
0x01E1 80AC	BISTSR	BIST Status Register
0x01E1 80B0	BISTDECR	BIST DWORD Error Count Register
0x01E1 80E0	TIMER1MS	BIST DWORD Error Count Register
0x01E1 80E8	GPARAM1R	Global Parameter 1 Register
0x01E1 80EC	GPARAM2R	Global Parameter 2 Register
0x01E1 80F0	PPARAMR	Port Parameter Register
0x01E1 80F4	TESTR	Test Register
0x01E1 80F8	VERSIONR	Version Register
0x01E1 80FC	IDR	ID Register
0x01E1 8100	P0CLB	Port Command List Base Address Register
0x01E1 8108	P0FB	Port FIS Base Address Register
0x01E1 8110	P0IS	Port Interrupt Status Register
0x01E1 8114	P0IE	Port Interrupt Enable Register
0x01E1 8118	P0CMD	Port Command Register
0x01E1 8120	P0TFD	Port Task File Data Register
0x01E1 8124	P0SIG	Port Signature Register
0x01E1 8128	P0SSTS	Port Serial ATA Status Register
0x01E1 812C	P0SCTL	Port Serial ATA Control Register
0x01E1 8130	P0SERR	Port Serial ATA Error Register
0x01E1 8134	P0SACT	Port Serial ATA Active Register
0x01E1 8138	P0CI	Port Command Issue Register
0x01E1 813C	P0SNTF	Port Serial ATA Notification Register
0x01E1 8170	P0DMACR	Port DMA Control Register
0x01E1 8178	P0PHYCR	Port PHY Control Register
0x01E1 817C	P0PHYSR	Port PHY Status Register

 Copyright © 2011–2013, Texas Instruments Incorporated

5.14.2 1. SATA Interface

This section provides the timing specification for the SATA interface as a PCB design and manufacturing specification. The design rules constrain PCB trace length, PCB trace skew, signal integrity, cross-talk, and signal timing. TI has performed the simulation and system design work to ensure the SATA interface requirements are met.

5.14.2.1 SATA Interface Schematic

Figure 5-30 shows the SATA interface schematic.

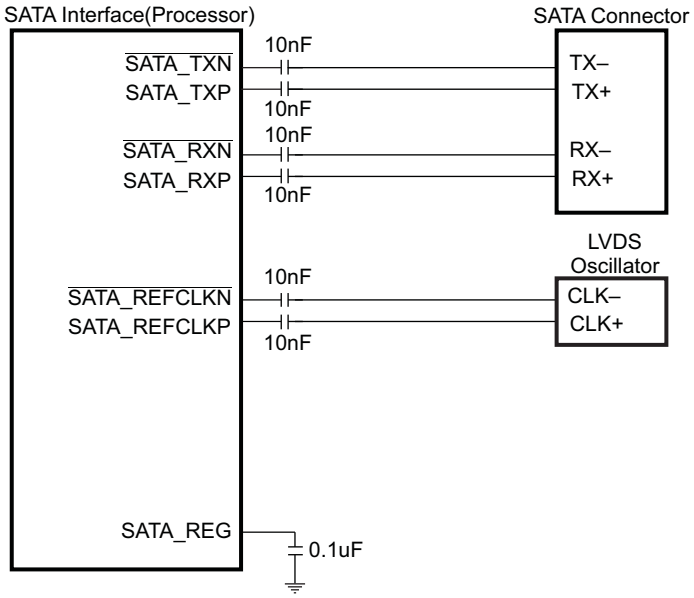

Figure 5-30. SATA Interface High Level Schematic

5.14.2.2 Compatible SATA Components and Modes

Table 5-45 shows the compatible SATA components and supported modes. Note that the only supported configuration is an internal cable from the processor host to the SATA device.

Table 5-45. SATA Supported Modes

PARAMETER	MIN	MAX	UNIT	SUPPORTED
Transfer Rates	1.5	3.0	Gbps	
eSATA				No
xSATA				No
Backplane				No
Internal Cable				Yes

5.14.2.3 PCB Stackup Specifications

Table 5-46 shows the stackup and feature sizes required for SATA.

Table 5-46. SATA PCB Stackup Specifications

PARAMETER	MIN	TYP	MAX	UNIT
PCB Routing/Plane Layers	4	6		Layers
Signal Routing Layers	2	3		Layers
Number of ground plane cuts allowed within SATA routing region			0	Layers
Number of layers between SATA routing region and reference ground plane			0	Layers

Table 5-46. SATA PCB Stackup Specifications (continued)

PARAMETER	MIN	TYP	MAX	UNIT
PCB Routing Feature Size	4			Mils
PCB Trace Width w	4			Mils
PCB BGA escape via pad size		18		Mils
PCB BGA escape via hole size		8		Mils
DSP Device BGA pad size (1)				

(1) Please refer to the Flip Chip Ball Grid Array Package Reference Guide (SPRU811) for device BGA pad size.

5.14.2.4 Routing Specifications

The SATA data signal traces are edge-coupled and must be routed to achieve exactly 100 Ohms differential impedance. This is impacted by trace width, trace spacing, distance between planes, and dielectric material. Verify with a proper PCB manufacturing tool that the trace geometry for both data signal pairs results in exactly 100 ohms differential impedance traces. Table 5-47 shows the routing specifications for the data and REFCLK signals .

Table 5-47. SATA Routing Specifications

PARAMETER	MIN	TYP	MAX	UNIT
DSP to SATA header trace length			7000	Mils
REFCLK trace length from oscillator to DSP			2000	Mils
Number of stubs allowed on SATA traces			0	Stubs
TX/RX pair differential impedance		100		Ohms
Number of vias on each SATA trace			3	Vias (1)
SATA differential pair to any other trace spacing	2*DS (2)			

(1) Vias must be used in pairs with their distance minimized.
(2) DS is the differential spacing of the SATA traces.

5.14.2.5 Coupling Capacitors

AC coupling capacitors are required on the receive data pair as well as the REFCLK pair. Table 5-48 shows the requirements for these capacitors.

Table 5-48. SATA Bypass and Coupling Capacitors Requirements

PARAMETER	MIN	TYP	MAX	UNIT
SATA AC coupling capacitor value	0.3	10	12	nF
SATA AC coupling capacitor package size			0603	10 Mils (1) (2)

(1) LxW, 10 mil units, i.e., a 0402 is a 40x20 mil surface mount capacitor.
(2) The physical size of the capacitor should be as small as possible.

5.14.2.6 SATA Interface Clock Source requirements

A high-quality, low-jitter differential clock source is required for the SATA PHY. The SATA interface requires a LVDS differential clock source to be provided at signals SATA_REFCLKP and SATA_REFCLKN. The clock source should be placed physically as close to the processor as possible.

Table 5-49 shows the requirements for the clock source.

Table 5-49. SATA Input Clock Source Requirements

PARAMETER	MIN	TYP	MAX	UNIT
Clock Frequency (1)	75		375	MHz
Jitter			50	ps pk-pk
Duty Cycle	40		60	%

(1) Discrete clock frequency points are supported based on the PLL multiplier used in the SATA PHY.

 Copyright © 2011–2013, Texas Instruments Incorporated

Table 5-49. SATA Input Clock Source Requirements (continued)

PARAMETER	MIN	TYP	MAX	UNIT
Rise/Fall Time		700		ps

5.14.3 SATA Unused Signal Configuration

If the SATA interface is not used, the SATA signals should be configured as shown below.

Table 5-50. Unused SATA Signal Configuration

SATA Signal Name	Configuration if SATA peripheral is not used
SATA_RXP	No Connect
$\overline{\text{SATA_RXN}}$	No Connect
SATA_TXP	No Connect
$\overline{\text{SATA_TXN}}$	No Connect
SATA_REFCLKP	No Connect
$\overline{\text{SATA_REFCLKN}}$	No Connect
SATA_MPSWITCH	May be used as GPIO or other peripheral function
SATA_CP_DET	May be used as GPIO or other peripheral function
SATA_CP_POD	May be used as GPIO or other peripheral function
SATA_LED	May be used as GPIO or other peripheral function
SATA_REG	No Connect
SATA_VDDR	No Connect
SATA_VDD	Prior to silicon revision 2.0, this supply must be connected to a static 1.2V nominal supply. For silicon revision 2.0 and later, this supply may be left unconnected for additional power conservation.
SATA_VSS	Vss

5.15 Multichannel Audio Serial Port (McASP)

The McASP serial port is specifically designed for multichannel audio applications. Its key features are:

- Flexible clock and frame sync generation logic and on-chip dividers
- Up to sixteen transmit or receive data pins and serializers
- Large number of serial data format options, including:
  - TDM Frames with 2 to 32 time slots per frame (periodic) or 1 slot per frame (burst)
  - Time slots of 8,12,16, 20, 24, 28, and 32 bits
  - First bit delay 0, 1, or 2 clocks
  - MSB or LSB first bit order
  - Left- or right-aligned data words within time slots
- DIT Mode with 384-bit Channel Status and 384-bit User Data registers
- Extensive error checking and mute generation logic
- All unused pins GPIO-capable
- Transmit & Receive FIFO Buffers allow the McASP to operate at a higher sample rate by making it more tolerant to DMA latency.
- Dynamic Adjustment of Clock Dividers
  - Clock Divider Value may be changed without resetting the McASP

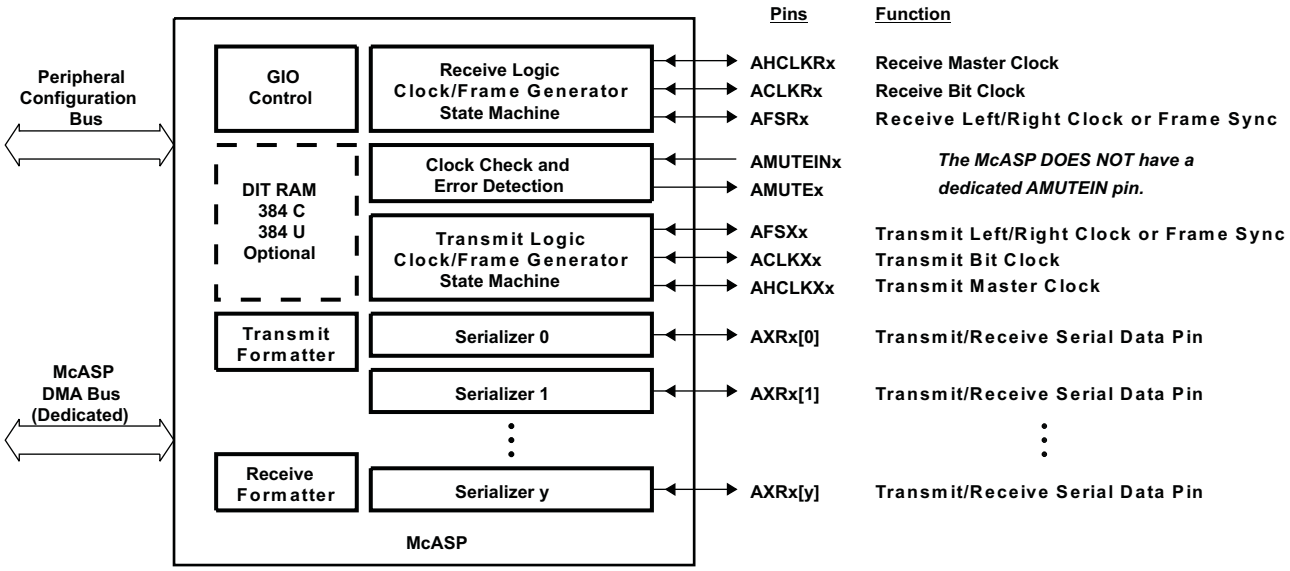

Figure 5-31. McASP Block Diagram

Copyright © 2011–2013, Texas Instruments Incorporated

5.15.1 McASP Peripheral Registers Description(s)

Registers for the McASP are summarized in Table 5-51. The registers are accessed through the peripheral configuration port. The receive buffer registers (RBUF) and transmit buffer registers (XBUF) can also be accessed through the DMA port, as listed in Table 5-52

Registers for the McASP Audio FIFO (AFIFO) are summarized in Table 5-53. Note that the AFIFO Write FIFO (WFIFO) and Read FIFO (RFIFO) have independent control and status registers. The AFIFO control registers are accessed through the peripheral configuration port.

Table 5-51. McASP Registers Accessed Through Peripheral Configuration Port

BYTE ADDRESS	ACRONYM	REGISTER DESCRIPTION
0x01D0 0000	REV	Revision identification register
0x01D0 0010	PFUNC	Pin function register
0x01D0 0014	PDIR	Pin direction register
0x01D0 0018	PDOUT	Pin data output register
0x01D0 001C	PDIN	Read returns: Pin data input register
0x01D0 001C	PDSET	Writes affect: Pin data set register (alternate write address: PDOUT)
0x01D0 0020	PDCLR	Pin data clear register (alternate write address: PDOUT)
0x01D0 0044	GBLCTL	Global control register
0x01D0 0048	AMUTE	Audio mute control register
0x01D0 004C	DLBCTL	Digital loopback control register
0x01D0 0050	DITCTL	DIT mode control register
0x01D0 0060	RGBLCTL	Receiver global control register: Alias of GBLCTL, only receive bits are affected - allows receiver to be reset independently from transmitter
0x01D0 0064	RMASK	Receive format unit bit mask register
0x01D0 0068	RFMT	Receive bit stream format register
0x01D0 006C	AFSRCTL	Receive frame sync control register
0x01D0 0070	ACLKRCTL	Receive clock control register
0x01D0 0074	AHCLKRCTL	Receive high-frequency clock control register
0x01D0 0078	RTDM	Receive TDM time slot 0-31 register
0x01D0 007C	RINTCTL	Receiver interrupt control register
0x01D0 0080	RSTAT	Receiver status register
0x01D0 0084	RSLOT	Current receive TDM time slot register
0x01D0 0088	RCLKCHK	Receive clock check control register
0x01D0 008C	REVTCTL	Receiver DMA event control register
0x01D0 00A0	XGBLCTL	Transmitter global control register. Alias of GBLCTL, only transmit bits are affected - allows transmitter to be reset independently from receiver
0x01D0 00A4	XMASK	Transmit format unit bit mask register
0x01D0 00A8	XFMT	Transmit bit stream format register
0x01D0 00AC	AFSXCTL	Transmit frame sync control register
0x01D0 00B0	ACLKXCTL	Transmit clock control register
0x01D0 00B4	AHCLKXCTL	Transmit high-frequency clock control register
0x01D0 00B8	XTDM	Transmit TDM time slot 0-31 register
0x01D0 00BC	XINTCTL	Transmitter interrupt control register
0x01D0 00C0	XSTAT	Transmitter status register
0x01D0 00C4	XSLOT	Current transmit TDM time slot register
0x01D0 00C8	XCLKCHK	Transmit clock check control register
0x01D0 00CC	XEVTCTL	Transmitter DMA event control register
0x01D0 0100	DITCSRA0	Left (even TDM time slot) channel status register (DIT mode) 0
0x01D0 0104	DITCSRA1	Left (even TDM time slot) channel status register (DIT mode) 1
0x01D0 0108	DITCSRA2	Left (even TDM time slot) channel status register (DIT mode) 2

Copyright © 2011–2013, Texas Instruments Incorporated

Table 5-51. McASP Registers Accessed Through Peripheral Configuration Port (continued)

BYTE ADDRESS	ACRONYM	REGISTER DESCRIPTION
0x01D0 010C	DITCSRA3	Left (even TDM time slot) channel status register (DIT mode) 3
0x01D0 0110	DITCSRA4	Left (even TDM time slot) channel status register (DIT mode) 4
0x01D0 0114	DITCSRA5	Left (even TDM time slot) channel status register (DIT mode) 5
0x01D0 0118	DITCSRB0	Right (odd TDM time slot) channel status register (DIT mode) 0
0x01D0 011C	DITCSRB1	Right (odd TDM time slot) channel status register (DIT mode) 1
0x01D0 0120	DITCSRB2	Right (odd TDM time slot) channel status register (DIT mode) 2
0x01D0 0124	DITCSRB3	Right (odd TDM time slot) channel status register (DIT mode) 3
0x01D0 0128	DITCSRB4	Right (odd TDM time slot) channel status register (DIT mode) 4
0x01D0 012C	DITCSRB5	Right (odd TDM time slot) channel status register (DIT mode) 5
0x01D0 0130	DITUDRA0	Left (even TDM time slot) channel user data register (DIT mode) 0
0x01D0 0134	DITUDRA1	Left (even TDM time slot) channel user data register (DIT mode) 1
0x01D0 0138	DITUDRA2	Left (even TDM time slot) channel user data register (DIT mode) 2
0x01D0 013C	DITUDRA3	Left (even TDM time slot) channel user data register (DIT mode) 3
0x01D0 0140	DITUDRA4	Left (even TDM time slot) channel user data register (DIT mode) 4
0x01D0 0144	DITUDRA5	Left (even TDM time slot) channel user data register (DIT mode) 5
0x01D0 0148	DITUDRB0	Right (odd TDM time slot) channel user data register (DIT mode) 0
0x01D0 014C	DITUDRB1	Right (odd TDM time slot) channel user data register (DIT mode) 1
0x01D0 0150	DITUDRB2	Right (odd TDM time slot) channel user data register (DIT mode) 2
0x01D0 0154	DITUDRB3	Right (odd TDM time slot) channel user data register (DIT mode) 3
0x01D0 0158	DITUDRB4	Right (odd TDM time slot) channel user data register (DIT mode) 4
0x01D0 015C	DITUDRB5	Right (odd TDM time slot) channel user data register (DIT mode) 5
0x01D0 0180	SRCTL0	Serializer control register 0
0x01D0 0184	SRCTL1	Serializer control register 1
0x01D0 0188	SRCTL2	Serializer control register 2
0x01D0 018C	SRCTL3	Serializer control register 3
0x01D0 0190	SRCTL4	Serializer control register 4
0x01D0 0194	SRCTL5	Serializer control register 5
0x01D0 0198	SRCTL6	Serializer control register 6
0x01D0 019C	SRCTL7	Serializer control register 7
0x01D0 01A0	SRCTL8	Serializer control register 8
0x01D0 01A4	SRCTL9	Serializer control register 9
0x01D0 01A8	SRCTL10	Serializer control register 10
0x01D0 01AC	SRCTL11	Serializer control register 11
0x01D0 01B0	SRCTL12	Serializer control register 12
0x01D0 01B4	SRCTL13	Serializer control register 13
0x01D0 01B8	SRCTL14	Serializer control register 14
0x01D0 01BC	SRCTL15	Serializer control register 15
0x01D0 0200	XBUF0 (1)	Transmit buffer register for serializer 0
0x01D0 0204	XBUF1 (1)	Transmit buffer register for serializer 1
0x01D0 0208	XBUF2 (1)	Transmit buffer register for serializer 2
0x01D0 020C	XBUF3 (1)	Transmit buffer register for serializer 3
0x01D0 0210	XBUF4 (1)	Transmit buffer register for serializer 4
0x01D0 0214	XBUF5 (1)	Transmit buffer register for serializer 5
0x01D0 0218	XBUF6 (1)	Transmit buffer register for serializer 6
0x01D0 021C	XBUF7 (1)	Transmit buffer register for serializer 7
0x01D0 0220	XBUF8 (1)	Transmit buffer register for serializer 8

(1) Writes to XRBUF originate from peripheral configuration port only when XBUSEL = 1 in XFMT.

 Copyright © 2011–2013, Texas Instruments Incorporated

Table 5-51. McASP Registers Accessed Through Peripheral Configuration Port (continued)

BYTE ADDRESS	ACRONYM	REGISTER DESCRIPTION
0x01D0 0224	XBUF9 (1)	Transmit buffer register for serializer 9
0x01D0 0228	XBUF10 (1)	Transmit buffer register for serializer 10
0x01D0 022C	XBUF11 (1)	Transmit buffer register for serializer 11
0x01D0 0230	XBUF12 (1)	Transmit buffer register for serializer 12
0x01D0 0234	XBUF13 (1)	Transmit buffer register for serializer 13
0x01D0 0238	XBUF14 (1)	Transmit buffer register for serializer 14
0x01D0 023C	XBUF15 (1)	Transmit buffer register for serializer 15
0x01D0 0280	RBUF0 (2)	Receive buffer register for serializer 0
0x01D0 0284	RBUF1 (2)	Receive buffer register for serializer 1
0x01D0 0288	RBUF2 (2)	Receive buffer register for serializer 2
0x01D0 028C	RBUF3 (2)	Receive buffer register for serializer 3
0x01D0 0290	RBUF4 (2)	Receive buffer register for serializer 4
0x01D0 0294	RBUF5 (2)	Receive buffer register for serializer 5
0x01D0 0298	RBUF6 (3)	Receive buffer register for serializer 6
0x01D0 029C	RBUF7 (3)	Receive buffer register for serializer 7
0x01D0 02A0	RBUF8 (3)	Receive buffer register for serializer 8
0x01D0 02A4	RBUF9 (3)	Receive buffer register for serializer 9
0x01D0 02A8	RBUF10 (3)	Receive buffer register for serializer 10
0x01D0 02AC	RBUF11 (3)	Receive buffer register for serializer 11
0x01D0 02B0	RBUF12 (3)	Receive buffer register for serializer 12
0x01D0 02B4	RBUF13 (3)	Receive buffer register for serializer 13
0x01D0 02B8	RBUF14 (3)	Receive buffer register for serializer 14
0x01D0 02BC	RBUF15 (3)	Receive buffer register for serializer 15

(2) Reads from XRBUF originate on peripheral configuration port only when RBUSEL = 1 in RFMT.
(3) Reads from XRBUF originate on peripheral configuration port only when RBUSEL = 1 in RFMT.

Table 5-52. McASP Registers Accessed Through DMA Port

ACCESS TYPE	BYTE ADDRESS	ACRONYM	REGISTER DESCRIPTION
Read Accesses	0x01D0 2000	RBUF	Receive buffer DMA port address. Cycles through receive serializers, skipping over transmit serializers and inactive serializers. Starts at the lowest serializer at the beginning of each time slot. Reads from DMA port only if XBUSEL = 0 in XFMT.
Write Accesses	0x01D0 2000	XBUF	Transmit buffer DMA port address. Cycles through transmit serializers, skipping over receive and inactive serializers. Starts at the lowest serializer at the beginning of each time slot. Writes to DMA port only if RBUSEL = 0 in RFMT.

Table 5-53. McASP AFIFO Registers Accessed Through Peripheral Configuration Port

BYTE ADDRESS	ACRONYM	REGISTER DESCRIPTION
0x01D0 1000	AFIFOREV	AFIFO revision identification register
0x01D0 1010	WFIFOCTL	Write FIFO control register
0x01D0 1014	WFIFOSTS	Write FIFO status register
0x01D0 1018	RFIFOCTL	Read FIFO control register
0x01D0 101C	RFIFOSTS	Read FIFO status register

Copyright © 2011–2013, Texas Instruments Incorporated

5.15.2 McASP Electrical Data/Timing

5.15.2.1 Multichannel Audio Serial Port 0 (McASP0) Timing

Table 5-54 and Table 5-56 assume testing over recommended operating conditions (see Figure 5-32 and Figure 5-33).

Table 5-54. Timing Requirements for McASP0 (1.3V, 1.2V, 1.1V)(1) (2)

NO.	PARAMETER			1.3V, 1.2V		1.1V		UNIT
				MIN	MAX	MIN	MAX	
1	$t_{c(AHCLKRX)}$	Cycle time, AHCLKR/X		25		28		ns
2	$t_{w(AHCLKRX)}$	Pulse duration, AHCLKR/X high or low		12.5		14		ns
3	$t_{c(ACLKRX)}$	Cycle time, ACLKR/X	AHCLKR/X ext	25(3)		28(3)		ns
4	$t_{w(ACLKRX)}$	Pulse duration, ACLKR/W high or low	AHCLKR/X ext	12.5		14		ns
5	$t_{su(AFSRX-ACLKRX)}$	Setup time, AFSR/X input to ACLKR/X (4)	AHCLKR/X int	11.5		12		ns
			AHCLKR/X ext input	4		5		ns
			AHCLKR/X ext output	4		5		ns
6	$t_{h(ACLKRX-AFSRX)}$	Hold time, AFSR/X input after ACLKR/X(4)	AHCLKR/X int	-1		-2		ns
			AHCLKR/X ext input	1		1		ns
			AHCLKR/X ext output	1		1		ns
7	$t_{su(AXR-ACLKRX)}$	Setup time, AXR0[n] input to ACLKR/X(4) (5)	AHCLKR/X int	11.5		12		ns
			AHCLKR/X ext	4		5		ns
8	$t_{h(ACLKRX-AXR)}$	Hold time, AXR0[n] input after ACLKR/X(4) (5)	AHCLKR/X int	-1		-2		ns
			AHCLKR/X ext input	3		4		ns
			AHCLKR/X ext output	3		4		ns

(1) ACLKX0 internal – McASP0 ACLKXCTL.CLKXM = 1, PDIR.ACLKX = 1
ACLKX0 external input – McASP0 ACLKXCTL.CLKXM = 0, PDIR.ACLKX = 0
ACLKX0 external output – McASP0 ACLKXCTL.CLKXM = 0, PDIR.ACLKX = 1
ACLKR0 internal – McASP0 ACLKRCTL.CLKRM = 1, PDIR.ACLKR =1
ACLKR0 external input – McASP0 ACLKRCTL.CLKRM = 0, PDIR.ACLKR = 0
ACLKR0 external output – McASP0 ACLKRCTL.CLKRM = 0, PDIR.ACLKR = 1
(2) P = SYSCLK2 period
(3) This timing is limited by the timing shown or 3P, whichever is greater.
(4) McASP0 ACLKXCTL.ASYNC=1: Receiver is clocked by its own ACLKR0
(5) McASP0 ACLKXCTL.ASYNC=0: Receiver is clocked by transmitter's ACLKX0

Copyright © 2011–2013, Texas Instruments Incorporated

Table 5-55. Timing Requirements for McASP0 (1.0V)(1) (2)

NO.	PARAMETER			1.0V MIN	1.0V MAX	UNIT
1	$t_{c(AHCLKRX)}$	Cycle time, AHCLKR/X		35		ns
2	$t_{w(AHCLKRX)}$	Pulse duration, AHCLKR/X high or low		17.5		ns
3	$t_{c(ACLKRX)}$	Cycle time, ACLKR/X	AHCLKR/X ext	35(3)		ns
4	$t_{w(ACLKRX)}$	Pulse duration, ACLKR/W high or low	AHCLKR/X ext	17.5		ns
5	$t_{su(AFSRX-ACLKRX)}$	Setup time, AFSR/X input to ACLKR/X (4)	AHCLKR/X int	16		ns
			AHCLKR/X ext input	5.5		ns
			AHCLKR/X ext output	5.5		ns
6	$t_{h(ACLKRX-AFSRX)}$	Hold time, AFSR/X input after ACLKR/X(4)	AHCLKR/X int	-2		ns
			AHCLKR/X ext input	1		ns
			AHCLKR/X ext output	1		ns
7	$t_{su(AXR-ACLKRX)}$	Setup time, AXR0[n] input to ACLKR/X(4) (5)	AHCLKR/X int	16		ns
			AHCLKR/X ext	5.5		ns
8	$t_{h(ACLKRX-AXR)}$	Hold time, AXR0[n] input after ACLKR/X(4) (5)	AHCLKR/X int	-2		ns
			AHCLKR/X ext input	5		ns
			AHCLKR/X ext output	5		ns

(1) ACLKX0 internal – McASP0 ACLKXCTL.CLKXM = 1, PDIR.ACLKX = 1
ACLKX0 external input – McASP0 ACLKXCTL.CLKXM = 0, PDIR.ACLKX = 0
ACLKX0 external output – McASP0 ACLKXCTL.CLKXM = 0, PDIR.ACLKX = 1
ACLKR0 internal – McASP0 ACLKRCTL.CLKRM = 1, PDIR.ACLKR =1
ACLKR0 external input – McASP0 ACLKRCTL.CLKRM = 0, PDIR.ACLKR = 0
ACLKR0 external output – McASP0 ACLKRCTL.CLKRM = 0, PDIR.ACLKR = 1
(2) P = SYSCLK2 period
(3) This timing is limited by the timing shown or 3P, whichever is greater.
(4) McASP0 ACLKXCTL.ASYNC=1: Receiver is clocked by its own ACLKR0
(5) McASP0 ACLKXCTL.ASYNC=0: Receiver is clocked by transmitter's ACLKX0

Copyright © 2011–2013, Texas Instruments Incorporated

Table 5-56. Switching Characteristics for McASP0 (1.3V, 1.2V, 1.1V)(1)

NO.	PARAMETER			1.3V, 1.2V		1.1V		UNIT
				MIN	MAX	MIN	MAX	
9	$t_{c(AHCLKRX)}$	Cycle time, AHCLKR/X		25		28		ns
10	$t_{w(AHCLKRX)}$	Pulse duration, AHCLKR/X high or low		AH – 2.5(2)		AH – 2.5(2)		ns
11	$t_{c(ACLKRX)}$	Cycle time, ACLKR/X	ACLKR/X int	25(3) (4)		28(3) (4)		ns
12	$t_{w(ACLKRX)}$	Pulse duration, ACLKR/X high or low	ACLKR/X int	A – 2.5(5)		A – 2.5(5)		ns
13	$t_{d(ACLKRX-AFSRX)}$	Delay time, ACLKR/X transmit edge to AFSX/R output valid(6)	ACLKR/X int	-1	6	-1	8	ns
			ACLKR/X ext input	2	13.5	2	14.5	ns
			ACLKR/X ext output	2	13.5	2	14.5	ns
14	$t_{d(ACLKX-AXRV)}$	Delay time, ACLKX transmit edge to AXR output valid	ACLKR/X int	-1	6	-1	8	ns
			ACLKR/X ext input	2	13.5	2	15	ns
			ACLKR/X ext output	2	13.5	2	15	ns
15	$t_{dis(ACLKX-AXRHZ)}$	Disable time, ACLKR/X transmit edge to AXR high impedance following last data bit	ACLKR/X int	0	6	0	8	ns
			ACLKR/X ext	2	13.5	2	15	ns

(1) McASP0 ACLKX0 internal – ACLKXCTL.CLKXM = 1, PDIR.ACLKX = 1
ACLKX0 external input – McASP0 ACLKXCTL.CLKXM = 0, PDIR.ACLKX = 0
ACLKX0 external output – McASP0ACLKXCTL.CLKXM = 0, PDIR.ACLKX = 1
ACLKR0 internal – McASP0 ACLKR0CTL.CLKRM = 1, PDIR.ACLKR =1
ACLKR0 external input – McASP0 ACLKRCTL.CLKRM = 0, PDIR.ACLKR = 0
ACLKR0 external output – McASP0 ACLKRCTL.CLKRM = 0, PDIR.ACLKR = 1
(2) AH = (AHCLKR/X period)/2 in ns. For example, when AHCLKR/X period is 25 ns, use AH = 12.5 ns.
(3) P = SYSCLK2 period
(4) This timing is limited by the timing shown or 3P, whichever is greater.
(5) A = (ACLKR/X period)/2 in ns. For example, when AHCLKR/X period is 25 ns, use AH = 12.5 ns.
(6) McASP0 ACLKXCTL.ASYNC=1: Receiver is clocked by its own ACLKR0

Table 5-57. Switching Characteristics for McASP0 (1.0V)(1)

NO.	PARAMETER			1.0V		UNIT
				MIN	MAX	
9	$t_{c(AHCLKRX)}$	Cycle time, AHCLKR/X		35		ns
10	$t_{w(AHCLKRX)}$	Pulse duration, AHCLKR/X high or low		AH – 2.5(2)		ns
11	$t_{c(ACLKRX)}$	Cycle time, ACLKR/X	ACLKR/X int	35(3) (4)		ns
12	$t_{w(ACLKRX)}$	Pulse duration, ACLKR/X high or low	ACLKR/X int	A – 2.5(5)		ns
13	$t_{d(ACLKRX-AFSRX)}$	Delay time, ACLKR/X transmit edge to AFSX/R output valid(6)	ACLKR/X int	-0.5	10	ns
			ACLKR/X ext input	2	19	ns
			ACLKR/X ext output	2	19	ns
14	$t_{d(ACLKX-AXRV)}$	Delay time, ACLKX transmit edge to AXR output valid	ACLKR/X int	-0.5	10	ns
			ACLKR/X ext input	2	19	ns
			ACLKR/X ext output	2	19	ns
15	$t_{dis(ACLKX-AXRHZ)}$	Disable time, ACLKR/X transmit edge to AXR high impedance following last data bit	ACLKR/X int	0	10	ns
			ACLKR/X ext	2	19	ns

(1) McASP0 ACLKX0 internal – ACLKXCTL.CLKXM = 1, PDIR.ACLKX = 1
ACLKX0 external input – McASP0 ACLKXCTL.CLKXM = 0, PDIR.ACLKX = 0
ACLKX0 external output – McASP0ACLKXCTL.CLKXM = 0, PDIR.ACLKX = 1
ACLKR0 internal – McASP0 ACLKR0CTL.CLKRM = 1, PDIR.ACLKR =1
ACLKR0 external input – McASP0 ACLKRCTL.CLKRM = 0, PDIR.ACLKR = 0
ACLKR0 external output – McASP0 ACLKRCTL.CLKRM = 0, PDIR.ACLKR = 1
(2) AH = (AHCLKR/X period)/2 in ns. For example, when AHCLKR/X period is 25 ns, use AH = 12.5 ns.
(3) P = SYSCLK2 period
(4) This timing is limited by the timing shown or 3P, whichever is greater.
(5) A = (ACLKR/X period)/2 in ns. For example, when AHCLKR/X period is 25 ns, use AH = 12.5 ns.
(6) McASP0 ACLKXCTL.ASYNC=1: Receiver is clocked by its own ACLKR0

Copyright © 2011–2013, Texas Instruments Incorporated

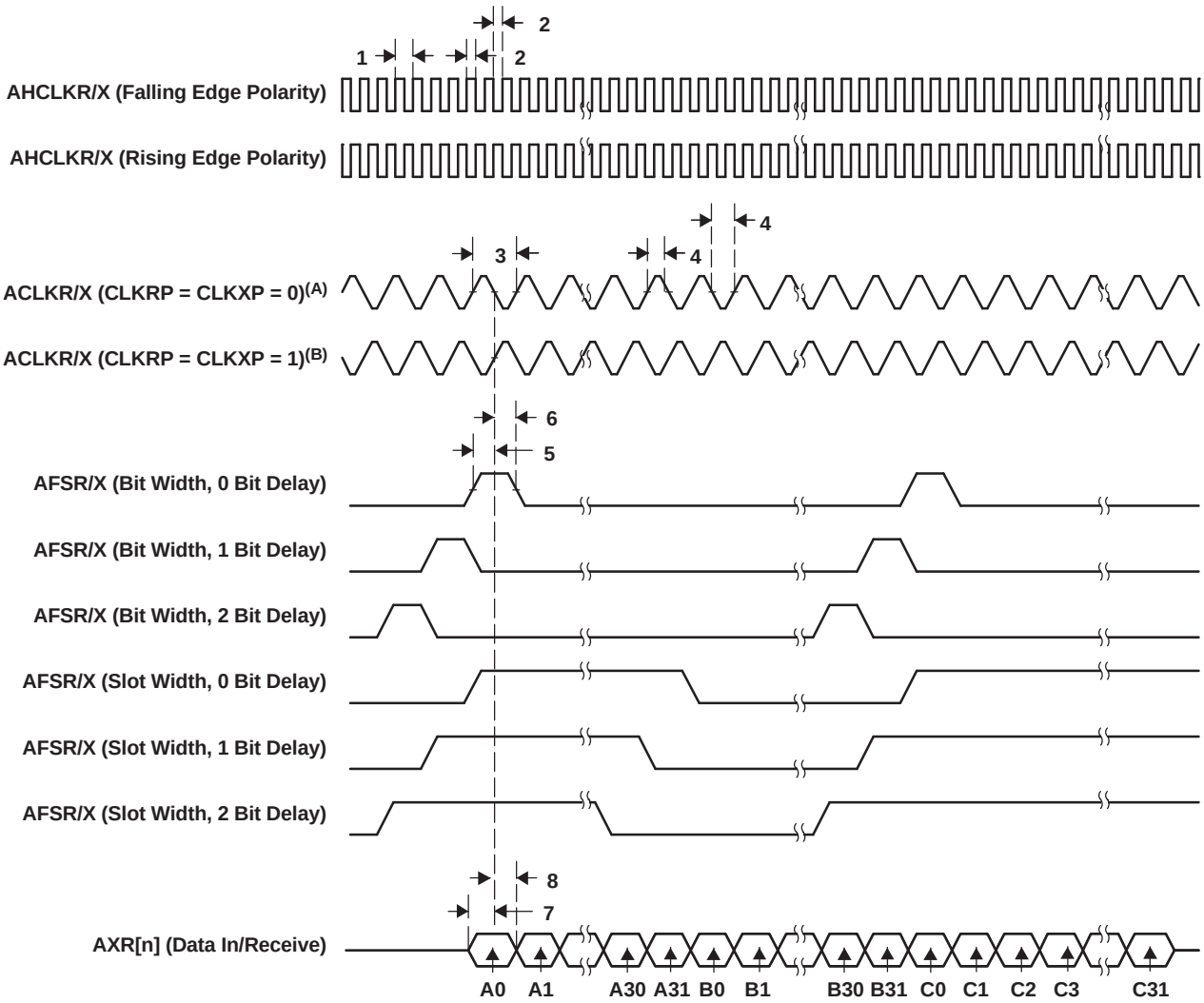

A. For CLKRP = CLKXP = 0, the McASP transmitter is configured for rising edge (to shift data out) and the McASP receiver is configured for falling edge (to shift data in).

B. For CLKRP = CLKXP = 1, the McASP transmitter is configured for falling edge (to shift data out) and the McASP receiver is configured for rising edge (to shift data in).

Figure 5-32. McASP Input Timings

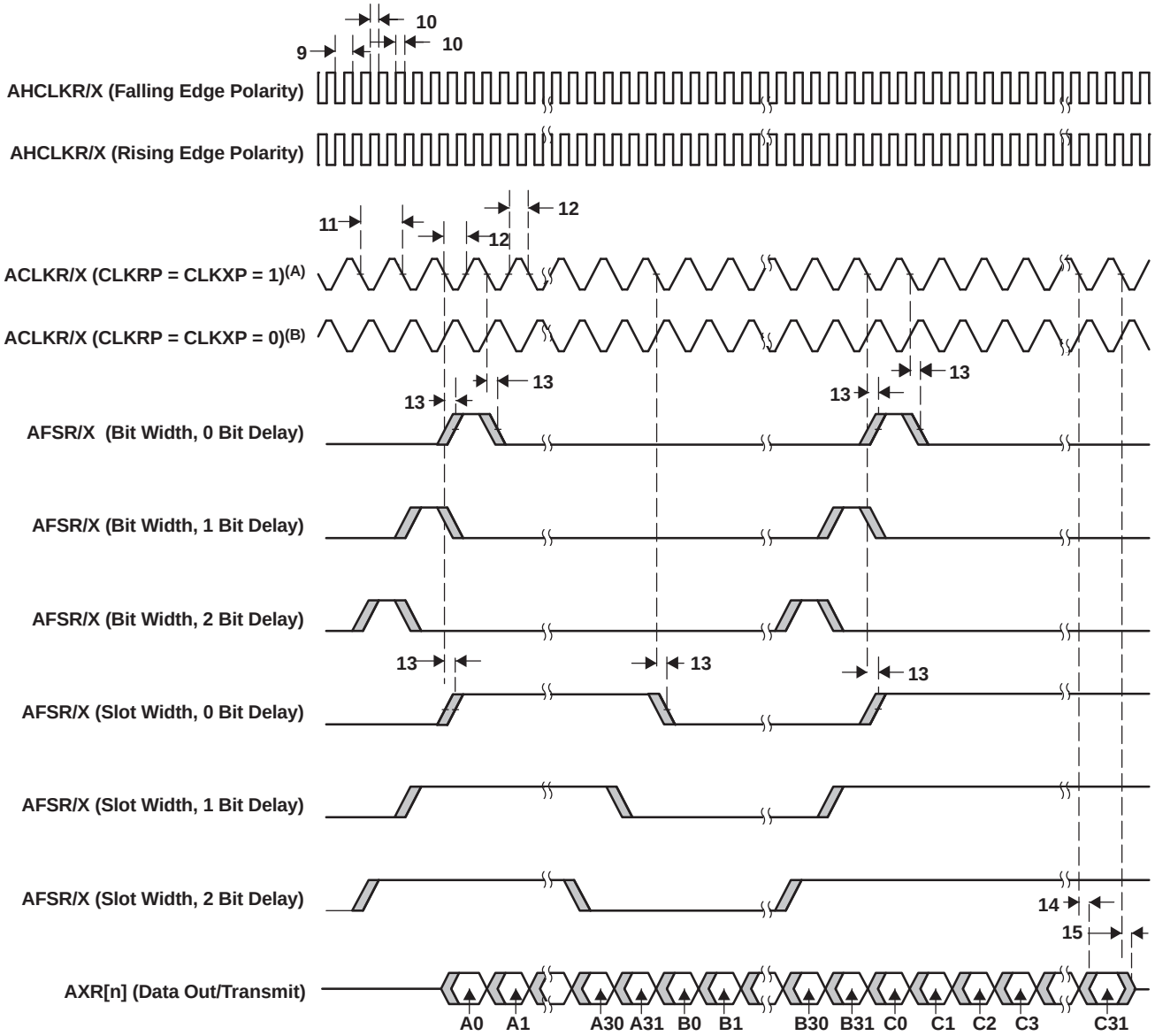

A. For CLKRP = CLKXP = 1, the McASP transmitter is configured for falling edge (to shift data out) and the McASP receiver is configured for rising edge (to shift data in).

B. For CLKRP = CLKXP = 0, the McASP transmitter is configured for rising edge (to shift data out) and the McASP receiver is configured for falling edge (to shift data in).

Figure 5-33. McASP Output Timings

Copyright © 2011–2013, Texas Instruments Incorporated

5.16 Multichannel Buffered Serial Port (McBSP)

The McBSP provides these functions:

- Full-duplex communication
- Double-buffered data registers, which allow a continuous data stream
- Independent framing and clocking for receive and transmit
- Direct interface to industry-standard codecs, analog interface chips (AICs), and other serially connected analog-to-digital (A/D) and digital-to-analog (D/A) devices
- External shift clock or an internal, programmable frequency shift clock for data transfer
- Transmit & Receive FIFO Buffers allow the McBSP to operate at a higher sample rate by making it more tolerant to DMA latency

If internal clock source is used, the CLKGDV field of the Sample Rate Generator Register (SRGR) must always be set to a value of 1 or greater.

5.16.1 McBSP Peripheral Register Description(s)

Table 5-58. McBSP/FIFO Registers

McBSP0 BYTE ADDRESS	McBSP1 BYTE ADDRESS	ACRONYM	REGISTER DESCRIPTION
McBSP Registers			
0x01D1 0000	0x01D1 1000	DRR	McBSP Data Receive Register (read-only)
0x01D1 0004	0x01D1 1004	DXR	McBSP Data Transmit Register
0x01D1 0008	0x01D1 1008	SPCR	McBSP Serial Port Control Register
0x01D1 000C	0x01D1 100C	RCR	McBSP Receive Control Register
0x01D1 0010	0x01D1 1010	XCR	McBSP Transmit Control Register
0x01D1 0014	0x01D1 1014	SRGR	McBSP Sample Rate Generator register
0x01D1 0018	0x01D1 1018	MCR	McBSP Multichannel Control Register
0x01D1 001C	0x01D1 101C	RCERE0	McBSP Enhanced Receive Channel Enable Register 0 Partition A/B
0x01D1 0020	0x01D1 1020	XCERE0	McBSP Enhanced Transmit Channel Enable Register 0 Partition A/B
0x01D1 0024	0x01D1 1024	PCR	McBSP Pin Control Register
0x01D1 0028	0x01D1 1028	RCERE1	McBSP Enhanced Receive Channel Enable Register 1 Partition C/D
0x01D1 002C	0x01D1 102C	XCERE1	McBSP Enhanced Transmit Channel Enable Register 1 Partition C/D
0x01D1 0030	0x01D1 1030	RCERE2	McBSP Enhanced Receive Channel Enable Register 2 Partition E/F
0x01D1 0034	0x01D1 1034	XCERE2	McBSP Enhanced Transmit Channel Enable Register 2 Partition E/F
0x01D1 0038	0x01D1 1038	RCERE3	McBSP Enhanced Receive Channel Enable Register 3 Partition G/H
0x01D1 003C	0x01D1 103C	XCERE3	McBSP Enhanced Transmit Channel Enable Register 3 Partition G/H
McBSP FIFO Control and Status Registers			
0x01D1 0800	0x01D1 1800	BFIFOREV	BFIFO Revision Identification Register
0x01D1 0810	0x01D1 1810	WFIFOCTL	Write FIFO Control Register
0x01D1 0814	0x01D1 1814	WFIFOSTS	Write FIFO Status Register
0x01D1 0818	0x01D1 1818	RFIFOCTL	Read FIFO Control Register
0x01D1 081C	0x01D1 181C	RFIFOSTS	Read FIFO Status Register
McBSP FIFO Data Registers			
0x01F1 0000	0x01F1 1000	RBUF	McBSP FIFO Receive Buffer
0x01F1 0000	0x01F1 1000	XBUF	McBSP FIFO Transmit Buffer

5.16.2 McBSP Electrical Data/Timing

The following assume testing over recommended operating conditions.

5.16.2.1 Multichannel Buffered Serial Port (McBSP) Timing

Table 5-59. Timing Requirements for McBSP0 [1.3V, 1.2V, 1.1V][(1)] (see Figure 5-34)

NO.	PARAMETER			1.3V, 1.2V		1.1V		UNIT
				MIN	MAX	MIN	MAX	
2	$t_{c(CKRX)}$	Cycle time, CLKR/X	CLKR/X ext	2P or 20[(2) (3)]		2P or 25[(2) (3)]		ns
3	$t_{w(CKRX)}$	Pulse duration, CLKR/X high or CLKR/X low	CLKR/X ext	P - 1[(4)]		P - 1[(4)]		ns
5	$t_{su(FRH-CKRL)}$	Setup time, external FSR high before CLKR low	CLKR int	14		15.5		ns
			CLKR ext	4		5		
6	$t_{h(CKRL-FRH)}$	Hold time, external FSR high after CLKR low	CLKR int	6		6		ns
			CLKR ext	3		3		
7	$t_{su(DRV-CKRL)}$	Setup time, DR valid before CLKR low	CLKR int	14		15.5		ns
			CLKR ext	4		5		
8	$t_{h(CKRL-DRV)}$	Hold time, DR valid after CLKR low	CLKR int	3		3		ns
			CLKR ext	3		3		
10	$t_{su(FXH-CKXL)}$	Setup time, external FSX high before CLKX low	CLKX int	14		15.5		ns
			CLKX ext	4		5		
11	$t_{h(CKXL-FXH)}$	Hold time, external FSX high after CLKX low	CLKX int	6		6		ns
			CLKX ext	3		3		

(1) CLKRP = CLKXP = FSRP = FSXP = 0. If polarity of any of the signals is inverted, then the timing references of that signal are also inverted.
(2) P = AYNC3 period in ns. For example, when the ASYNC clock domain is running at 100 MHz, use 10 ns.
(3) Use whichever value is greater. Minimum CLKR/X cycle times *must* be met, even when CLKR/X is generated by an internal clock source. The minimum CLKR/X cycle times are based on internal logic speed; the maximum usable speed may be lower due to EDMA limitations and AC timing requirements.
(4) This parameter applies to the maximum McBSP frequency. Operate serial clocks (CLKR/X) in the reasonable range of 40/60 duty cycle.

Copyright © 2011–2013, Texas Instruments Incorporated

Table 5-60. Timing Requirements for McBSP0 [1.0V][(1)] (see Figure 5-34)

NO.	PARAMETER			1.0V MIN	1.0V MAX	UNIT
2	$t_{c(CKRX)}$	Cycle time, CLKR/X	CLKR/X ext	2P or 26.6[(2) (3)]		ns
3	$t_{w(CKRX)}$	Pulse duration, CLKR/X high or CLKR/X low	CLKR/X ext	P - 1[(4)]		ns
5	$t_{su(FRH-CKRL)}$	Setup time, external FSR high before CLKR low	CLKR int	20		ns
			CLKR ext	5		
6	$t_{h(CKRL-FRH)}$	Hold time, external FSR high after CLKR low	CLKR int	6		ns
			CLKR ext	3		
7	$t_{su(DRV-CKRL)}$	Setup time, DR valid before CLKR low	CLKR int	20		ns
			CLKR ext	5		
8	$t_{h(CKRL-DRV)}$	Hold time, DR valid after CLKR low	CLKR int	3		ns
			CLKR ext	3		
10	$t_{su(FXH-CKXL)}$	Setup time, external FSX high before CLKX low	CLKX int	20		ns
			CLKX ext	5		
11	$t_{h(CKXL-FXH)}$	Hold time, external FSX high after CLKX low	CLKX int	6		ns
			CLKX ext	3		

(1) CLKRP = CLKXP = FSRP = FSXP = 0. If polarity of any of the signals is inverted, then the timing references of that signal are also inverted.
(2) P = AYNC3 period in ns. For example, when the ASYNC clock domain is running at 100 MHz, use 10 ns.
(3) Use whichever value is greater. Minimum CLKR/X cycle times *must* be met, even when CLKR/X is generated by an internal clock source. The minimum CLKR/X cycle times are based on internal logic speed; the maximum usable speed may be lower due to EDMA limitations and AC timing requirements.
(4) This parameter applies to the maximum McBSP frequency. Operate serial clocks (CLKR/X) in the reasonable range of 40/60 duty cycle.

Copyright © 2011–2013, Texas Instruments Incorporated

Table 5-61. Switching Characteristics for McBSP0 [1.3V, 1.2V, 1.1V](1) (2) (see Figure 5-34)

NO.	PARAMETER			1.3V, 1.2V		1.1V		UNIT
				MIN	MAX	MIN	MAX	
1	$t_{d(CKSH-CKRXH)}$	Delay time, CLKS high to CLKR/X high for internal CLKR/X generated from CLKS input		2	14.5	2	16	ns
2	$t_{c(CKRX)}$	Cycle time, CLKR/X	CLKR/X int	2P or 20(3) (4) (5)		2P or 25(3) (4) (5)		ns
3	$t_{w(CKRX)}$	Pulse duration, CLKR/X high or CLKR/X low	CLKR/X int	C - 2(6)	C + 2(6)	C - 2(6)	C + 2(6)	ns
4	$t_{d(CKRH-FRV)}$	Delay time, CLKR high to internal FSR valid	CLKR int	-4	5.5	-4	5.5	ns
			CLKR ext	2	14.5	2	16	
9	$t_{d(CKXH-FXV)}$	Delay time, CLKX high to internal FSX valid	CLKX int	-4	5.5	-4	5.5	ns
			CLKX ext	2	14.5	2	16	
12	$t_{dis(CKXH-DXHZ)}$	Disable time, DX high impedance following last data bit from CLKX high	CLKX int	-4	7.5	-5.5	7.5	ns
			CLKX ext	-2	16	-22	16	
13	$t_{d(CKXH-DXV)}$	Delay time, CLKX high to DX valid	CLKX int	-4 + D1(7)	5.5 + D2(7)	-4 + D1(7)	5.5 + D2(7)	ns
			CLKX ext	2 + D1(7)	14.5 + D2(7)	2 + D1(7)	16 + D2(7)	
14	$t_{d(FXH-DXV)}$	Delay time, FSX high to DX valid ONLY applies when in data delay 0 (XDATDLY = 00b) mode	FSX int	-4(8)	5(8)	-4(8)	5(8)	ns
			FSX ext	-2(8)	14.5(8)	-2(8)	16(8)	

(1) CLKRP = CLKXP = FSRP = FSXP = 0. If polarity of any of the signals is inverted, then the timing references of that signal are also inverted.
(2) Minimum delay times also represent minimum output hold times.
(3) Minimum CLKR/X cycle times must be met, even when CLKR/X is generated by an internal clock source. Minimum CLKR/X cycle times are based on internal logic speed; the maximum usable speed may be lower due to EDMA limitations and AC timing requirements.
(4) P = AYNC3 period in ns. For example, when the ASYNC clock domain is running at 100 MHz, use 10 ns.
(5) Use whichever value is greater.
(6) C = H or L
S = sample rate generator input clock = P if CLKSM = 1 (P = ASYNC period)
S = sample rate generator input clock = P_clks if CLKSM = 0 (P_clks = CLKS period)
H = CLKX high pulse width = (CLKGDV/2 + 1) * S if CLKGDV is even
H = (CLKGDV + 1)/2 * S if CLKGDV is odd
L = CLKX low pulse width = (CLKGDV/2) * S if CLKGDV is even
L = (CLKGDV + 1)/2 * S if CLKGDV is odd
CLKGDV should be set appropriately to ensure the McBSP bit rate does not exceed the maximum limit (see (4) above).
(7) Extra delay from CLKX high to DX valid **applies *only* to the first data bit of a device**, if and only if DXENA = 1 in SPCR.
if DXENA = 0, then D1 = D2 = 0
if DXENA = 1, then D1 = 6P, D2 = 12P
(8) Extra delay from FSX high to DX valid **applies *only* to the first data bit of a device**, if and only if DXENA = 1 in SPCR.
if DXENA = 0, then D1 = D2 = 0
if DXENA = 1, then D1 = 6P, D2 = 12P

Copyright © 2011–2013, Texas Instruments Incorporated

Table 5-62. Switching Characteristics for McBSP0 [1.0V][(1) (2)] (see Figure 5-34)

NO.	PARAMETER			1.0V		UNIT
				MIN	MAX	
1	$t_{d(CKSH-CKRXH)}$	Delay time, CLKS high to CLKR/X high for internal CLKR/X generated from CLKS input		3	21.5	ns
2	$t_{c(CKRX)}$	Cycle time, CLKR/X	CLKR/X int	2P or 26.6[(3) (4) (5)]		ns
3	$t_{w(CKRX)}$	Pulse duration, CLKR/X high or CLKR/X low	CLKR/X int	C - 2[(6)]	C + 2[(6)]	ns
4	$t_{d(CKRH-FRV)}$	Delay time, CLKR high to internal FSR valid	CLKR int	-4	10	ns
			CLKR ext	2.5	21.5	
9	$t_{d(CKXH-FXV)}$	Delay time, CLKX high to internal FSX valid	CLKX int	-4	10	ns
			CLKX ext	2.5	21.5	
12	$t_{dis(CKXH-DXHZ)}$	Disable time, DX high impedance following last data bit from CLKX high	CLKX int	-4	10	ns
			CLKX ext	-2	21.5	
13	$t_{d(CKXH-DXV)}$	Delay time, CLKX high to DX valid	CLKX int	-4 + D1[(7)]	10 + D2[(7)]	ns
			CLKX ext	2.5 + D1[(7)]	21.5 + D2[(7)]	
14	$t_{d(FXH-DXV)}$	Delay time, FSX high to DX valid ONLY applies when in data delay 0 (XDATDLY = 00b) mode	FSX int	-4[(8)]	5[(8)]	ns
			FSX ext	-2[(8)]	21.5[(8)]	

(1) CLKRP = CLKXP = FSRP = FSXP = 0. If polarity of any of the signals is inverted, then the timing references of that signal are also inverted.
(2) Minimum delay times also represent minimum output hold times.
(3) Minimum CLKR/X cycle times must be met, even when CLKR/X is generated by an internal clock source. Minimum CLKR/X cycle times are based on internal logic speed; the maximum usable speed may be lower due to EDMA limitations and AC timing requirements.
(4) P = AYNC3 period in ns. For example, when the ASYNC clock domain is running at 100 MHz, use 10 ns.
(5) Use whichever value is greater.
(6) C = H or L
S = sample rate generator input clock = P if CLKSM = 1 (P = ASYNC period)
S = sample rate generator input clock = P_clks if CLKSM = 0 (P_clks = CLKS period)
H = CLKX high pulse width = (CLKGDV/2 + 1) * S if CLKGDV is even
H = (CLKGDV + 1)/2 * S if CLKGDV is odd
L = CLKX low pulse width = (CLKGDV/2) * S if CLKGDV is even
L = (CLKGDV + 1)/2 * S if CLKGDV is odd
CLKGDV should be set appropriately to ensure the McBSP bit rate does not exceed the maximum limit (see (4) above).
(7) Extra delay from CLKX high to DX valid **applies *only* to the first data bit of a device**, if and only if DXENA = 1 in SPCR.
if DXENA = 0, then D1 = D2 = 0
if DXENA = 1, then D1 = 6P, D2 = 12P
(8) Extra delay from FSX high to DX valid **applies *only* to the first data bit of a device**, if and only if DXENA = 1 in SPCR.
if DXENA = 0, then D1 = D2 = 0
if DXENA = 1, then D1 = 6P, D2 = 12P

Table 5-63. Timing Requirements for McBSP1 [1.3V, 1.2V, 1.1V][(1)] (see Figure 5-34)

NO.	PARAMETER			1.3V, 1.2V		1.1V		UNIT
				MIN	MAX	MIN	MAX	
2	$t_{c(CKRX)}$	Cycle time, CLKR/X	CLKR/X ext	2P or 20[(2) (3)]		2P or 25[(2) (4)]		ns
3	$t_{w(CKRX)}$	Pulse duration, CLKR/X high or CLKR/X low	CLKR/X ext	P - 1[(5)]		P - 1[(6)]		ns
5	$t_{su(FRH-CKRL)}$	Setup time, external FSR high before CLKR low	CLKR int	15		18		ns
			CLKR ext	5		5		
6	$t_{h(CKRL-FRH)}$	Hold time, external FSR high after CLKR low	CLKR int	6		6		ns
			CLKR ext	3		3		
7	$t_{su(DRV-CKRL)}$	Setup time, DR valid before CLKR low	CLKR int	15		18		ns
			CLKR ext	5		5		
8	$t_{h(CKRL-DRV)}$	Hold time, DR valid after CLKR low	CLKR int	3		3		ns
			CLKR ext	3		3		
10	$t_{su(FXH-CKXL)}$	Setup time, external FSX high before CLKX low	CLKX int	15		18		ns
			CLKX ext	5		5		
11	$t_{h(CKXL-FXH)}$	Hold time, external FSX high after CLKX low	CLKX int	6		6		ns
			CLKX ext	3		3		

(1) CLKRP = CLKXP = FSRP = FSXP = 0. If polarity of any of the signals is inverted, then the timing references of that signal are also inverted.
(2) P = AYNC3 period in ns. For example, when the ASYNC clock domain is running at 100 MHz, use 10 ns.
(3) Use whichever value is greater. Minimum CLKR/X cycle times *must* be met, even when CLKR/X is generated by an internal clock source. The minimum CLKR/X cycle times are based on internal logic speed; the maximum usable speed may be lower due to EDMA limitations and AC timing requirements.
(4) Use whichever value is greater. Minimum CLKR/X cycle times *must* be met, even when CLKR/X is generated by an internal clock source. The minimum CLKR/X cycle times are based on internal logic speed; the maximum usable speed may be lower due to EDMA limitations and AC timing requirements.
(5) This parameter applies to the maximum McBSP frequency. Operate serial clocks (CLKR/X) in the reasonable range of 40/60 duty cycle.
(6) This parameter applies to the maximum McBSP frequency. Operate serial clocks (CLKR/X) in the reasonable range of 40/60 duty cycle.

 Copyright © 2011–2013, Texas Instruments Incorporated

Table 5-64. Timing Requirements for McBSP1 [1.0V][(1)] (see Figure 5-34)

NO.	PARAMETER			1.0V MIN	1.0V MAX	UNIT
2	$t_{c(CKRX)}$	Cycle time, CLKR/X	CLKR/X ext	2P or 26.6[(2) (3)]		ns
3	$t_{w(CKRX)}$	Pulse duration, CLKR/X high or CLKR/X low	CLKR/X ext	P - 1[(4)]		ns
5	$t_{su(FRH-CKRL)}$	Setup time, external FSR high before CLKR low	CLKR int	21		ns
			CLKR ext	10		
6	$t_{h(CKRL-FRH)}$	Hold time, external FSR high after CLKR low	CLKR int	6		ns
			CLKR ext	3		
7	$t_{su(DRV-CKRL)}$	Setup time, DR valid before CLKR low	CLKR int	21		ns
			CLKR ext	10		
8	$t_{h(CKRL-DRV)}$	Hold time, DR valid after CLKR low	CLKR int	3		ns
			CLKR ext	3		
10	$t_{su(FXH-CKXL)}$	Setup time, external FSX high before CLKX low	CLKX int	21		ns
			CLKX ext	10		
11	$t_{h(CKXL-FXH)}$	Hold time, external FSX high after CLKX low	CLKX int	6		ns
			CLKX ext	3		

(1) CLKRP = CLKXP = FSRP = FSXP = 0. If polarity of any of the signals is inverted, then the timing references of that signal are also inverted.
(2) P = AYNC3 period in ns. For example, when the ASYNC clock domain is running at 100 MHz, use 10 ns.
(3) Use whichever value is greater. Minimum CLKR/X cycle times *must* be met, even when CLKR/X is generated by an internal clock source. The minimum CLKR/X cycle times are based on internal logic speed; the maximum usable speed may be lower due to EDMA limitations and AC timing requirements.
(4) This parameter applies to the maximum McBSP frequency. Operate serial clocks (CLKR/X) in the reasonable range of 40/60 duty cycle.

Copyright © 2011–2013, Texas Instruments Incorporated

Table 5-65. Switching Characteristics for McBSP1 [1.3V, 1.2V, 1.1V][(1) (2)] (see Figure 5-34)

NO.	PARAMETER			1.3V, 1.2V		1.1V		UNIT
				MIN	MAX	MIN	MAX	
1	$t_{d(CKSH-CKRXH)}$	Delay time, CLKS high to CLKR/X high for internal CLKR/X generated from CLKS input		0.5	16.5	1.5	18	ns
2	$t_{c(CKRX)}$	Cycle time, CLKR/X	CLKR/X int	2P or 20[(3) (4) (5)]		2P or 25[(3) (4) (5)]		ns
3	$t_{w(CKRX)}$	Pulse duration, CLKR/X high or CLKR/X low	CLKR/X int	C - 2[(6)]	C + 2[(6)]	C - 2[(6)]	C + 2[(6)]	ns
4	$t_{d(CKRH-FRV)}$	Delay time, CLKR high to internal FSR valid	CLKR int	-4	6.5	-4	13	ns
			CLKR ext	1	16.5	2	18	
9	$t_{d(CKXH-FXV)}$	Delay time, CLKX high to internal FSX valid	CLKX int	-4	6.5	-4	13	ns
			CLKX ext	1	16.5	2	18	
12	$t_{dis(CKXH-DXHZ)}$	Disable time, DX high impedance following last data bit from CLKX high	CLKX int	-4	6.5	-4	13	ns
			CLKX ext	-2	16.5	-2	18	
13	$t_{d(CKXH-DXV)}$	Delay time, CLKX high to DX valid	CLKX int	-4 + D1[(7)]	6.5 + D2[(7)]	-4 + D1[(7)]	13 + D2[(7)]	ns
			CLKX ext	1 + D1[(7)]	16.5 + D2[(7)]	1 + D1[(7)]	18 + D2[(7)]	
14	$t_{d(FXH-DXV)}$	Delay time, FSX high to DX valid ONLY applies when in data delay 0 (XDATDLY = 00b) mode	FSX int	-4[(8)]	6.5[(8)]	-4[(8)]	13[(8)]	ns
			FSX ext	-2[(8)]	16.5[(8)]	-2[(8)]	18[(9)]	

(1) CLKRP = CLKXP = FSRP = FSXP = 0. If polarity of any of the signals is inverted, then the timing references of that signal are also inverted.
(2) Minimum delay times also represent minimum output hold times.
(3) Minimum CLKR/X cycle times must be met, even when CLKR/X is generated by an internal clock source. Minimum CLKR/X cycle times are based on internal logic speed; the maximum usable speed may be lower due to EDMA limitations and AC timing requirements.
(4) P = AYNC3 period in ns. For example, when the ASYNC clock domain is running at 100 MHz, use 10 ns.
(5) Use whichever value is greater.
(6) C = H or L
S = sample rate generator input clock = P if CLKSM = 1 (P = ASYNC period)
S = sample rate generator input clock = P_clks if CLKSM = 0 (P_clks = CLKS period)
H = CLKX high pulse width = (CLKGDV/2 + 1) * S if CLKGDV is even
H = (CLKGDV + 1)/2 * S if CLKGDV is odd
L = CLKX low pulse width = (CLKGDV/2) * S if CLKGDV is even
L = (CLKGDV + 1)/2 * S if CLKGDV is odd
CLKGDV should be set appropriately to ensure the McBSP bit rate does not exceed the maximum limit (see (4) above).
(7) Extra delay from CLKX high to DX valid **applies *only* to the first data bit of a device**, if and only if DXENA = 1 in SPCR.
if DXENA = 0, then D1 = D2 = 0
if DXENA = 1, then D1 = 6P, D2 = 12P
(8) Extra delay from FSX high to DX valid **applies *only* to the first data bit of a device**, if and only if DXENA = 1 in SPCR.
if DXENA = 0, then D1 = D2 = 0
if DXENA = 1, then D1 = 6P, D2 = 12P
(9) Extra delay from FSX high to DX valid **applies *only* to the first data bit of a device**, if and only if DXENA = 1 in SPCR.
if DXENA = 0, then D1 = D2 = 0
if DXENA = 1, then D1 = 6P, D2 = 12P

Copyright © 2011–2013, Texas Instruments Incorporated

Table 5-66. Switching Characteristics for McBSP1 [1.0V][(1) (2)] (see Figure 5-34)

NO.	PARAMETER			1.0V MIN	1.0V MAX	UNIT
1	$t_{d(CKSH-CKRXH)}$	Delay time, CLKS high to CLKR/X high for internal CLKR/X generated from CLKS input		1.5	23	ns
2	$t_{c(CKRX)}$	Cycle time, CLKR/X	CLKR/X int	2P or 26.6[(3) (4) (5)]		ns
3	$t_{w(CKRX)}$	Pulse duration, CLKR/X high or CLKR/X low	CLKR/X int	C - 2[(6)]	C + 2[(6)]	ns
4	$t_{d(CKRH-FRV)}$	Delay time, CLKR high to internal FSR valid	CLKR int	-4	13	ns
			CLKR ext	2.5	23	
9	$t_{d(CKXH-FXV)}$	Delay time, CLKX high to internal FSX valid	CLKX int	-4	13	ns
			CLKX ext	2	23	
12	$t_{dis(CKXH-DXHZ)}$	Disable time, DX high impedance following last data bit from CLKX high	CLKX int	-4	13	ns
			CLKX ext	-2	23	
13	$t_{d(CKXH-DXV)}$	Delay time, CLKX high to DX valid	CLKX int	-4 + D1[(7)]	13 + D2[(8)]	ns
			CLKX ext	2 + D1[(8)]	23 + D2[(8)]	
14	$t_{d(FXH-DXV)}$	Delay time, FSX high to DX valid ONLY applies when in data delay 0 (XDATDLY = 00b) mode	FSX int	-4[(9)]	13[(9)]	ns
			FSX ext	-2[(9)]	23[(9)]	

(1) CLKRP = CLKXP = FSRP = FSXP = 0. If polarity of any of the signals is inverted, then the timing references of that signal are also inverted.
(2) Minimum delay times also represent minimum output hold times.
(3) Minimum CLKR/X cycle times must be met, even when CLKR/X is generated by an internal clock source. Minimum CLKR/X cycle times are based on internal logic speed; the maximum usable speed may be lower due to EDMA limitations and AC timing requirements.
(4) P = AYNC3 period in ns. For example, when the ASYNC clock domain is running at 100 MHz, use 10 ns.
(5) Use whichever value is greater.
(6) C = H or L
S = sample rate generator input clock = P if CLKSM = 1 (P = ASYNC period)
S = sample rate generator input clock = P_clks if CLKSM = 0 (P_clks = CLKS period)
H = CLKX high pulse width = (CLKGDV/2 + 1) * S if CLKGDV is even
H = (CLKGDV + 1)/2 * S if CLKGDV is odd
L = CLKX low pulse width = (CLKGDV/2) * S if CLKGDV is even
L = (CLKGDV + 1)/2 * S if CLKGDV is odd
CLKGDV should be set appropriately to ensure the McBSP bit rate does not exceed the maximum limit (see (4) above).
(7) Extra delay from CLKX high to DX valid **applies *only* to the first data bit of a device**, if and only if DXENA = 1 in SPCR.
if DXENA = 0, then D1 = D2 = 0
if DXENA = 1, then D1 = 6P, D2 = 12P
(8) Extra delay from CLKX high to DX valid **applies *only* to the first data bit of a device**, if and only if DXENA = 1 in SPCR.
if DXENA = 0, then D1 = D2 = 0
if DXENA = 1, then D1 = 6P, D2 = 12P
(9) Extra delay from FSX high to DX valid **applies *only* to the first data bit of a device**, if and only if DXENA = 1 in SPCR.
if DXENA = 0, then D1 = D2 = 0
if DXENA = 1, then D1 = 6P, D2 = 12P

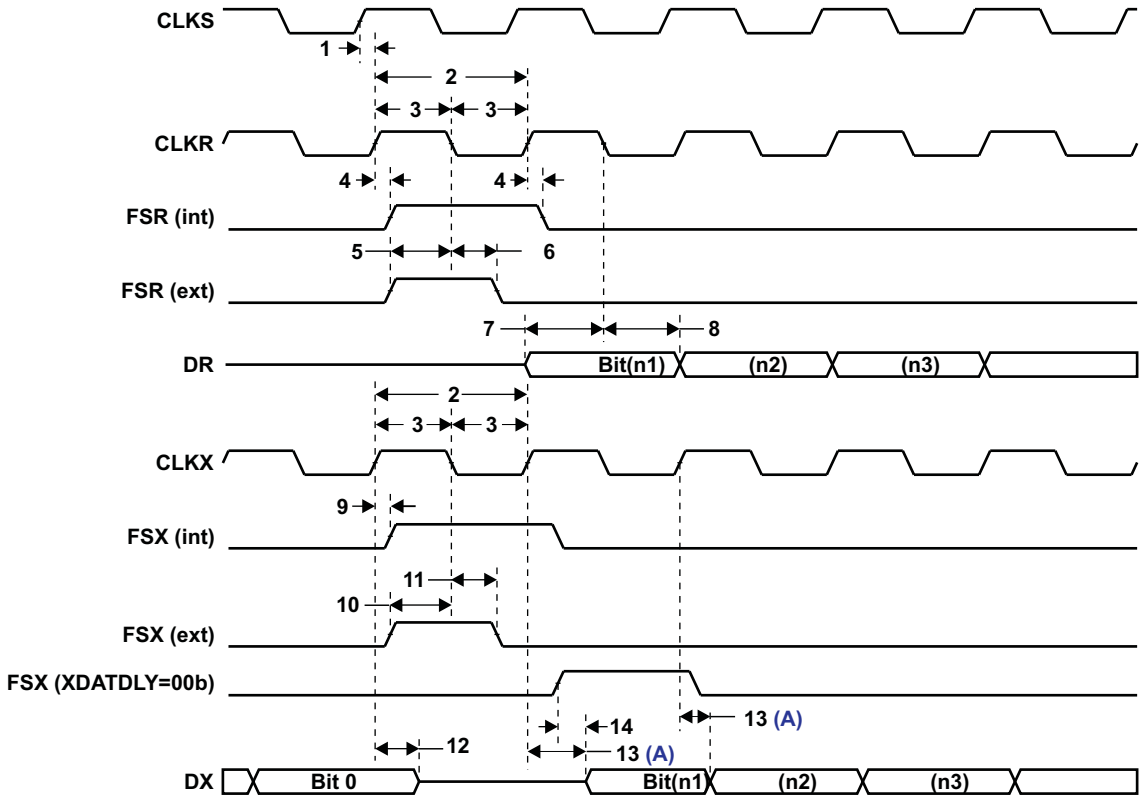

Figure 5-34. McBSP Timing(B)

Table 5-67. Timing Requirements for McBSP0 FSR When GSYNC = 1 (see Figure 5-35)

NO.	PARAMETER		1.3V, 1.2V		1.1V		1.0V		UNIT
			MIN	MAX	MIN	MAX	MIN	MAX	
1	$t_{su(FRH-CKSH)}$	Setup time, FSR high before CLKS high	4		4.5		5		ns
2	$t_{h(CKSH-FRH)}$	Hold time, FSR high after CLKS high	4		4		4		ns

Table 5-68. Timing Requirements for McBSP1 FSR When GSYNC = 1 (see Figure 5-35)

NO.	PARAMETER		1.3V, 1.2V		1.1V		1.0V		UNIT
			MIN	MAX	MIN	MAX	MIN	MAX	
1	$t_{su(FRH-CKSH)}$	Setup time, FSR high before CLKS high	5		5		10		ns
2	$t_{h(CKSH-FRH)}$	Hold time, FSR high after CLKS high	4		4		4		ns

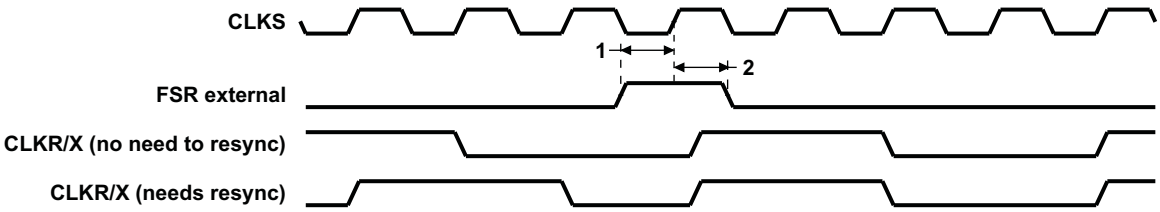

Figure 5-35. FSR Timing When GSYNC = 1

Copyright © 2011–2013, Texas Instruments Incorporated

5.17 Serial Peripheral Interface Ports (SPI0, SPI1)

Figure 5-36 is a block diagram of the SPI module, which is a simple shift register and buffer plus control logic. Data is written to the shift register before transmission occurs and is read from the buffer at the end of transmission. The SPI can operate either as a master, in which case, it initiates a transfer and drives the SPIx_CLK pin, or as a slave. Four clock phase and polarity options are supported as well as many data formatting options.

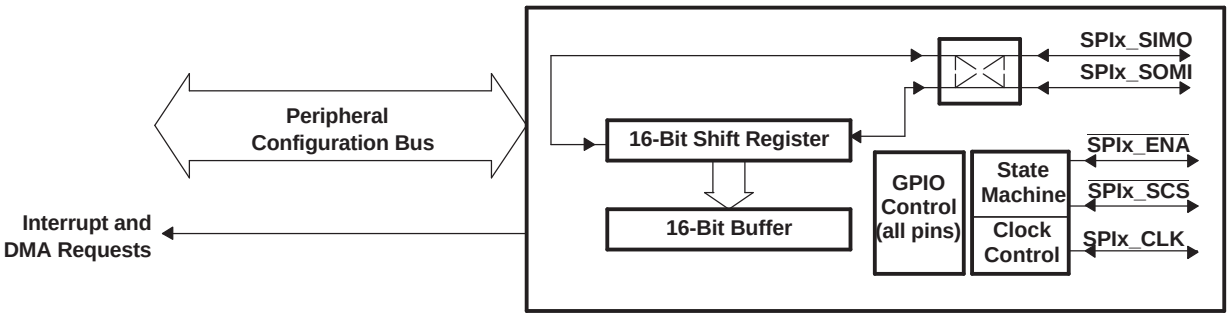

Figure 5-36. Block Diagram of SPI Module

The SPI supports 3-, 4-, and 5-pin operation with three basic pins (SPIx_CLK, SPIx_SIMO, and SPIx_SOMI) and two optional pins ($\overline{\text{SPIx_SCS}}$, $\overline{\text{SPIx_ENA}}$).

The optional $\overline{\text{SPIx_SCS}}$ (Slave Chip Select) pin is most useful to enable in slave mode when there are other slave devices on the same SPI port. The device will only shift data and drive the SPIx_SOMI pin when $\overline{\text{SPIx_SCS}}$ is held low.

In slave mode, $\overline{\text{SPIx_ENA}}$ is an optional output. The $\overline{\text{SPIx_ENA}}$ output provides the status of the internal transmit buffer (SPIDAT0/1 registers). In four-pin mode with the enable option, $\overline{\text{SPIx_ENA}}$ is asserted only when the transmit buffer is full, indicating that the slave is ready to begin another transfer. In five-pin mode, the $\overline{\text{SPIx_ENA}}$ is additionally qualified by $\overline{\text{SPIx_SCS}}$ being asserted. This allows a single handshake line to be shared by multiple slaves on the same SPI bus.

In master mode, the $\overline{\text{SPIx_ENA}}$ pin is an optional input and the master can be configured to delay the start of the next transfer until the slave asserts $\overline{\text{SPIx_ENA}}$. The addition of this handshake signal simplifies SPI communications and, on average, increases SPI bus throughput since the master does not need to delay each transfer long enough to allow for the worst-case latency of the slave device. Instead, each transfer can begin as soon as both the master and slave have actually serviced the previous SPI transfer.

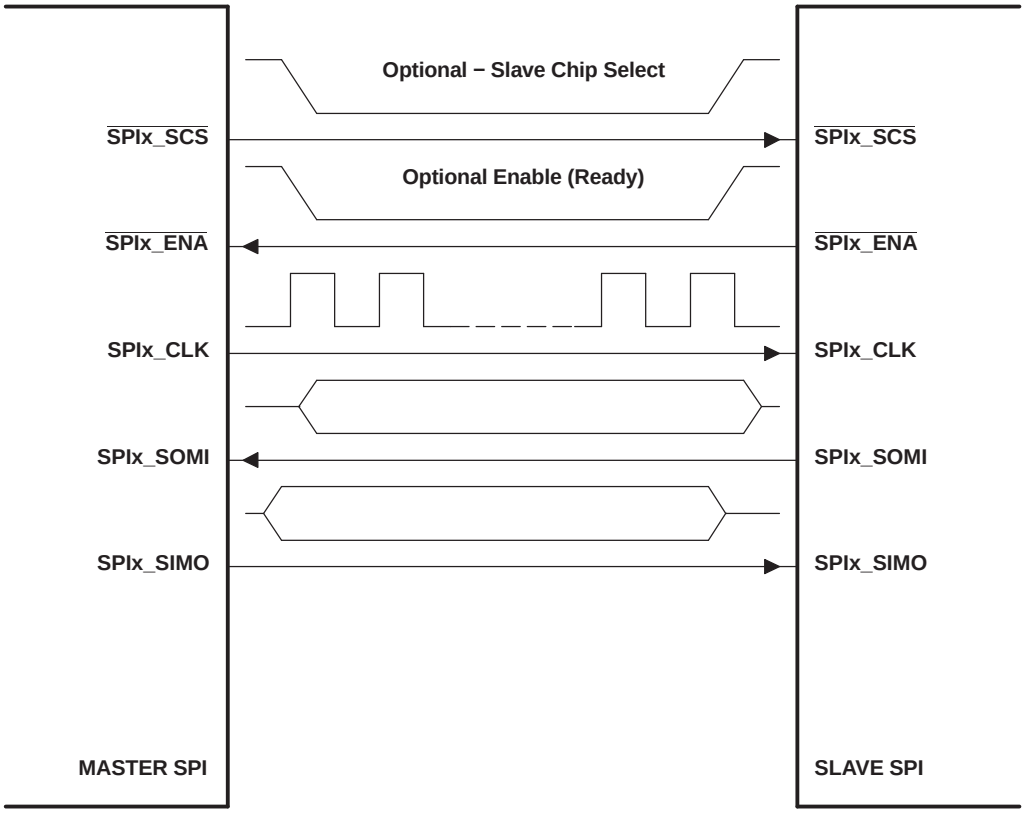

Figure 5-37. Illustration of SPI Master-to-SPI Slave Connection

Copyright © 2011–2013, Texas Instruments Incorporated

5.17.1 SPI Peripheral Registers Description(s)

Table 5-69 is a list of the SPI registers.

Table 5-69. SPIx Configuration Registers

SPI0 BYTE ADDRESS	SPI1 BYTE ADDRESS	ACRONYM	DESCRIPTION
0x01C4 1000	0x01F0 E000	SPIGCR0	Global Control Register 0
0x01C4 1004	0x01F0 E004	SPIGCR1	Global Control Register 1
0x01C4 1008	0x01F0 E008	SPIINT0	Interrupt Register
0x01C4 100C	0x01F0 E00C	SPILVL	Interrupt Level Register
0x01C4 1010	0x01F0 E010	SPIFLG	Flag Register
0x01C4 1014	0x01F0 E014	SPIPC0	Pin Control Register 0 (Pin Function)
0x01C4 1018	0x01F0 E018	SPIPC1	Pin Control Register 1 (Pin Direction)
0x01C4 101C	0x01F0 E01C	SPIPC2	Pin Control Register 2 (Pin Data In)
0x01C4 1020	0x01F0 E020	SPIPC3	Pin Control Register 3 (Pin Data Out)
0x01C4 1024	0x01F0 E024	SPIPC4	Pin Control Register 4 (Pin Data Set)
0x01C4 1028	0x01F0 E028	SPIPC5	Pin Control Register 5 (Pin Data Clear)
0x01C4 102C	0x01F0 E02C	Reserved	Reserved - Do not write to this register
0x01C4 1030	0x01F0 E030	Reserved	Reserved - Do not write to this register
0x01C4 1034	0x01F0 E034	Reserved	Reserved - Do not write to this register
0x01C4 1038	0x01F0 E038	SPIDAT0	Shift Register 0 (without format select)
0x01C4 103C	0x01F0 E03C	SPIDAT1	Shift Register 1 (with format select)
0x01C4 1040	0x01F0 E040	SPIBUF	Buffer Register
0x01C4 1044	0x01F0 E044	SPIEMU	Emulation Register
0x01C4 1048	0x01F0 E048	SPIDELAY	Delay Register
0x01C4 104C	0x01F0 E04C	SPIDEF	Default Chip Select Register
0x01C4 1050	0x01F0 E050	SPIFMT0	Format Register 0
0x01C4 1054	0x01F0 E054	SPIFMT1	Format Register 1
0x01C4 1058	0x01F0 E058	SPIFMT2	Format Register 2
0x01C4 105C	0x01F0 E05C	SPIFMT3	Format Register 3
0x01C4 1060	0x01F0 E060	INTVEC0	Interrupt Vector for SPI INT0
0x01C4 1064	0x01F0 E064	INTVEC1	Interrupt Vector for SPI INT1

Copyright © 2011–2013, Texas Instruments Incorporated

5.17.2 SPI Electrical Data/Timing

5.17.2.1 Serial Peripheral Interface (SPI) Timing

Table 5-70 through Table 5-85 assume testing over recommended operating conditions (see Figure 5-38 through Figure 5-41).

Table 5-70. General Timing Requirements for SPI0 Master Modes (1)

NO.	PARAMETER			1.3V, 1.2V		1.1V		1.0V		UNIT
				MIN	MAX	MIN	MAX	MIN	MAX	
1	$t_{c(SPC)M}$	Cycle Time, SPI0_CLK, All Master Modes		20 (2)	256P	30 (2)	256P	40 (2)	256P	ns
2	$t_{w(SPCH)M}$	Pulse Width High, SPI0_CLK, All Master Modes		0.5M-1		0.5M-1		0.5M-1		ns
3	$t_{w(SPCL)M}$	Pulse Width Low, SPI0_CLK, All Master Modes		0.5M-1		0.5M-1		0.5M-1		ns
4	$t_{d(SIMO_SPC)M}$	Delay, initial data bit valid on SPI0_SIMO after initial edge on SPI0_CLK (3)	Polarity = 0, Phase = 0, to SPI0_CLK rising		5		5		6	ns
			Polarity = 0, Phase = 1, to SPI0_CLK rising		-0.5M+5		-0.5M+5		-0.5M+6	
			Polarity = 1, Phase = 0, to SPI0_CLK falling		5		5		6	
			Polarity = 1, Phase = 1, to SPI0_CLK falling		-0.5M+5		-0.5M+5		-0.5M+6	
5	$t_{d(SPC_SIMO)M}$	Delay, subsequent bits valid on SPI0_SIMO after transmit edge of SPI0_CLK	Polarity = 0, Phase = 0, from SPI0_CLK rising		5		5		6	ns
			Polarity = 0, Phase = 1, from SPI0_CLK falling		5		5		6	
			Polarity = 1, Phase = 0, from SPI0_CLK falling		5		5		6	
			Polarity = 1, Phase = 1, from SPI0_CLK rising		5		5		6	
6	$t_{oh(SPC_SIMO)M}$	Output hold time, SPI0_SIMO valid after receive edge of SPI0_CLK	Polarity = 0, Phase = 0, from SPI0_CLK falling	0.5M-3		0.5M-3		0.5M-3		ns
			Polarity = 0, Phase = 1, from SPI0_CLK rising	0.5M-3		0.5M-3		0.5M-3		
			Polarity = 1, Phase = 0, from SPI0_CLK rising	0.5M-3		0.5M-3		0.5M-3		
			Polarity = 1, Phase = 1, from SPI0_CLK falling	0.5M-3		0.5M-3		0.5M-3		
7	$t_{su(SOMI_SPC)M}$	Input Setup Time, SPI0_SOMI valid before receive edge of SPI0_CLK	Polarity = 0, Phase = 0, to SPI0_CLK falling	1.5		1.5		1.5		ns
			Polarity = 0, Phase = 1, to SPI0_CLK rising	1.5		1.5		1.5		
			Polarity = 1, Phase = 0, to SPI0_CLK rising	1.5		1.5		1.5		
			Polarity = 1, Phase = 1, to SPI0_CLK falling	1.5		1.5		1.5		
8	$t_{ih(SPC_SOMI)M}$	Input Hold Time, SPI0_SOMI valid after receive edge of SPI0_CLK	Polarity = 0, Phase = 0, from SPI0_CLK falling	4		4		5		ns
			Polarity = 0, Phase = 1, from SPI0_CLK rising	4		4		5		
			Polarity = 1, Phase = 0, from SPI0_CLK rising	4		4		5		
			Polarity = 1, Phase = 1, from SPI0_CLK falling	4		4		5		

(1) P = SYSCLK2 period; M = $t_{c(SPC)M}$ (SPI master bit clock period)
(2) This timing is limited by the timing shown or 3P, whichever is greater.
(3) First bit may be MSB or LSB depending upon SPI configuration. MO(0) refers to first bit and MO(n) refers to last bit output on SPI0_SIMO. MI(0) refers to the first bit input and MI(n) refers to the last bit input on SPI0_SOMI.

Copyright © 2011–2013, Texas Instruments Incorporated

Table 5-71. General Timing Requirements for SPI0 Slave Modes[1]

NO.	PARAMETER			1.3V, 1.2V		1.1V		1.0V		UNIT
				MIN	MAX	MIN	MAX	MIN	MAX	
9	$t_{c(SPC)S}$	Cycle Time, SPI0_CLK, All Slave Modes		40[2]		50[2]		60[2]		ns
10	$t_{w(SPCH)S}$	Pulse Width High, SPI0_CLK, All Slave Modes		18		22		27		ns
11	$t_{w(SPCL)S}$	Pulse Width Low, SPI0_CLK, All Slave Modes		18		22		27		ns
12	$t_{su(SOMI_SPC)S}$	Setup time, transmit data written to SPI before initial clock edge from master.[3] [4]	Polarity = 0, Phase = 0, to SPI0_CLK rising	2P		2P		2P		ns
			Polarity = 0, Phase = 1, to SPI0_CLK rising	2P		2P		2P		
			Polarity = 1, Phase = 0, to SPI0_CLK falling	2P		2P		2P		
			Polarity = 1, Phase = 1, to SPI0_CLK falling	2P		2P		2P		
13	$t_{d(SPC_SOMI)S}$	Delay, subsequent bits valid on SPI0_SOMI after transmit edge of SPI0_CLK	Polarity = 0, Phase = 0, from SPI0_CLK rising		17		20		27	ns
			Polarity = 0, Phase = 1, from SPI0_CLK falling		17		20		27	
			Polarity = 1, Phase = 0, from SPI0_CLK falling		17		20		27	
			Polarity = 1, Phase = 1, from SPI0_CLK rising		17		20		27	
14	$t_{oh(SPC_SOMI)S}$	Output hold time, SPI0_SOMI valid after receive edge of SPI0_CLK	Polarity = 0, Phase = 0, from SPI0_CLK falling	0.5S-6		0.5S-16		0.5S-20		ns
			Polarity = 0, Phase = 1, from SPI0_CLK rising	0.5S-6		0.5S-16		0.5S-20		
			Polarity = 1, Phase = 0, from SPI0_CLK rising	0.5S-6		0.5S-16		0.5S-20		
			Polarity = 1, Phase = 1, from SPI0_CLK falling	0.5S-6		0.5S-16		0.5S-20		
15	$t_{su(SIMO_SPC)S}$	Input Setup Time, SPI0_SIMO valid before receive edge of SPI0_CLK	Polarity = 0, Phase = 0, to SPI0_CLK falling	1.5		1.5		1.5		ns
			Polarity = 0, Phase = 1, to SPI0_CLK rising	1.5		1.5		1.5		
			Polarity = 1, Phase = 0, to SPI0_CLK rising	1.5		1.5		1.5		
			Polarity = 1, Phase = 1, to SPI0_CLK falling	1.5		1.5		1.5		
16	$t_{ih(SPC_SIMO)S}$	Input Hold Time, SPI0_SIMO valid after receive edge of SPI0_CLK	Polarity = 0, Phase = 0, from SPI0_CLK falling	4		4		5		ns
			Polarity = 0, Phase = 1, from SPI0_CLK rising	4		4		5		
			Polarity = 1, Phase = 0, from SPI0_CLK rising	4		4		5		
			Polarity = 1, Phase = 1, from SPI0_CLK falling	4		4		5		

(1) P = SYSCLK2 period; S = $t_{c(SPC)S}$ (SPI slave bit clock period)
(2) This timing is limited by the timing shown or 3P, whichever is greater.
(3) First bit may be MSB or LSB depending upon SPI configuration. SO(0) refers to first bit and SO(n) refers to last bit output on SPI0_SOMI. SI(0) refers to the first bit input and SI(n) refers to the last bit input on SPI0_SIMO.
(4) Measured from the termination of the write of new data to the SPI module, In analyzing throughput requirements, additional internal bus cycles must be accounted for to allow data to be written to the SPI module by the DSP CPU.

Table 5-72. Additional SPI0 Master Timings, 4-Pin Enable Option (1) (2) (3)

NO.	PARAMETER			1.3V, 1.2V		1.1V		1.0V		UNIT
				MIN	MAX	MIN	MAX	MIN	MAX	
17	$t_{d(ENA_SPC)M}$	Delay from slave assertion of $\overline{SPI0_ENA}$ active to first SPI0_CLK from master.(4)	Polarity = 0, Phase = 0, to SPI0_CLK rising		3P+5		3P+5		3P+6	ns
			Polarity = 0, Phase = 1, to SPI0_CLK rising		0.5M+3P+5		0.5M+3P+5		0.5M+3P+6	
			Polarity = 1, Phase = 0, to SPI0_CLK falling		3P+5		3P+5		3P+6	
			Polarity = 1, Phase = 1, to SPI0_CLK falling		0.5M+3P+5		0.5M+3P+5		0.5M+3P+6	
18	$t_{d(SPC_ENA)M}$	Max delay for slave to deassert $\overline{SPI0_ENA}$ after final SPI0_CLK edge to ensure master does not begin the next transfer.(5)	Polarity = 0, Phase = 0, from SPI0_CLK falling		0.5M+P+5		0.5M+P+5		0.5M+P+6	ns
			Polarity = 0, Phase = 1, from SPI0_CLK falling		P+5		P+5		P+6	
			Polarity = 1, Phase = 0, from SPI0_CLK rising		0.5M+P+5		0.5M+P+5		0.5M+P+6	
			Polarity = 1, Phase = 1, from SPI0_CLK rising		P+5		P+5		P+6	

(1) These parameters are in addition to the general timings for SPI master modes (Table 5-70).
(2) P = SYSCLK2 period; M = $t_{c(SPC)M}$ (SPI master bit clock period)
(3) Figure shows only Polarity = 0, Phase = 0 as an example. Table gives parameters for all four master clocking modes.
(4) In the case where the master SPI is ready with new data before $\overline{SPI0_ENA}$ assertion.
(5) In the case where the master SPI is ready with new data before $\overline{SPI0_EN}$ A deassertion.

Table 5-73. Additional SPI0 Master Timings, 4-Pin Chip Select Option (1) (2) (3)

NO.	PARAMETER			1.3V, 1.2V		1.1V		1.0V		UNIT
				MIN	MAX	MIN	MAX	MIN	MAX	
19	$t_{d(SCS_SPC)M}$	Delay from $\overline{SPI0_SCS}$ active to first SPI0_CLK(4) (5)	Polarity = 0, Phase = 0, to SPI0_CLK rising	2P-1		2P-2		2P-3		ns
			Polarity = 0, Phase = 1, to SPI0_CLK rising	0.5M+2P-1		0.5M+2P-2		0.5M+2P-3		
			Polarity = 1, Phase = 0, to SPI0_CLK falling	2P-1		2P-2		2P-3		
			Polarity = 1, Phase = 1, to SPI0_CLK falling	0.5M+2P-1		0.5M+2P-2		0.5M+2P-3		

(1) These parameters are in addition to the general timings for SPI master modes (Table 5-70).
(2) P = SYSCLK2 period; M = $t_{c(SPC)M}$ (SPI master bit clock period)
(3) Figure shows only Polarity = 0, Phase = 0 as an example. Table gives parameters for all four master clocking modes.
(4) In the case where the master SPI is ready with new data before $\overline{SPI0_SCS}$ assertion.
(5) This delay can be increased under software control by the register bit field SPIDELAY.C2TDELAY[4:0].

Copyright © 2011–2013, Texas Instruments Incorporated

Table 5-73. Additional SPI0 Master Timings, 4-Pin Chip Select Option (1) (2) (3) (continued)

NO.	PARAMETER			1.3V, 1.2V		1.1V		1.0V		UNIT
				MIN	MAX	MIN	MAX	MIN	MAX	
20	$t_{d(SPC_SCS)M}$	Delay from final SPI0_CLK edge to master deasserting $\overline{SPI0_SCS}$ (6) (7)	Polarity = 0, Phase = 0, from SPI0_CLK falling	0.5M+P-1		0.5M+P-2		0.5M+P-3		ns
			Polarity = 0, Phase = 1, from SPI0_CLK falling	P-1		P-2		P-3		
			Polarity = 1, Phase = 0, from SPI0_CLK rising	0.5M+P-1		0.5M+P-2		0.5M+P-3		
			Polarity = 1, Phase = 1, from SPI0_CLK rising	P-1		P-2		P-3		

(6) Except for modes when SPIDAT1.CSHOLD is enabled and there is additional data to transmit. In this case, $\overline{SPI0_SCS}$ will remain asserted.
(7) This delay can be increased under software control by the register bit field SPIDELAY.T2CDELAY[4:0].

Table 5-74. Additional SPI0 Master Timings, 5-Pin Option (1) (2) (3)

NO.	PARAMETER			1.3V, 1.2V		1.1V		1.0V		UNIT
				MIN	MAX	MIN	MAX	MIN	MAX	
18	$t_{d(SPC_ENA)M}$	Max delay for slave to deassert $\overline{SPI0_ENA}$ after final SPI0_CLK edge to ensure master does not begin the next transfer. (4)	Polarity = 0, Phase = 0, from SPI0_CLK falling		0.5M+P+5		0.5M+P+5		0.5M+P+6	ns
			Polarity = 0, Phase = 1, from SPI0_CLK falling		P+5		P+5		P+6	
			Polarity = 1, Phase = 0, from SPI0_CLK rising		0.5M+P+5		0.5M+P+5		0.5M+P+6	
			Polarity = 1, Phase = 1, from SPI0_CLK rising		P+5		P+5		P+6	
20	$t_{d(SPC_SCS)M}$	Delay from final SPI0_CLK edge to master deasserting $\overline{SPI0_SCS}$ (5) (6)	Polarity = 0, Phase = 0, from SPI0_CLK falling	0.5M+P-2		0.5M+P-2		0.5M+P-3		ns
			Polarity = 0, Phase = 1, from SPI0_CLK falling	P-2		P-2		P-3		
			Polarity = 1, Phase = 0, from SPI0_CLK rising	0.5M+P-2		0.5M+P-2		0.5M+P-3		
			Polarity = 1, Phase = 1, from SPI0_CLK rising	P-2		P-2		P-3		
21	$t_{d(SCSL_ENAL)M}$	Max delay for slave SPI to drive $\overline{SPI0_ENA}$ valid after master asserts $\overline{SPI0_SCS}$ to delay the master from beginning the next transfer,			C2TDELAY+P		C2TDELAY+P		C2TDELAY+P	ns

(1) These parameters are in addition to the general timings for SPI master modes (Table 5-71).
(2) P = SYSCLK2 period; M = $t_{c(SPC)M}$ (SPI master bit clock period)
(3) Figure shows only Polarity = 0, Phase = 0 as an example. Table gives parameters for all four master clocking modes.
(4) In the case where the master SPI is ready with new data before $\overline{SPI0_ENA}$ deassertion.
(5) Except for modes when SPIDAT1.CSHOLD is enabled and there is additional data to transmit. In this case, $\overline{SPI0_SCS}$ will remain asserted.
(6) This delay can be increased under software control by the register bit field SPIDELAY.T2CDELAY[4:0].

Copyright © 2011–2013, Texas Instruments Incorporated

Table 5-74. Additional SPI0 Master Timings, 5-Pin Option (1) (2) (3) (continued)

NO.	PARAMETER			1.3V, 1.2V		1.1V		1.0V		UNIT
				MIN	MAX	MIN	MAX	MIN	MAX	
22	$t_{d(SCS_SPC)M}$	Delay from $\overline{SPI0_SCS}$ active to first SPI0_CLK (7) (8) (9)	Polarity = 0, Phase = 0, to SPI0_CLK rising	2P-2		2P-2		2P-3		ns
			Polarity = 0, Phase = 1, to SPI0_CLK rising	0.5M+2P-2		0.5M+2P-2		0.5M+2P-3		
			Polarity = 1, Phase = 0, to SPI0_CLK falling	2P-2		2P-2		2P-3		
			Polarity = 1, Phase = 1, to SPI0_CLK falling	0.5M+2P-2		0.5M+2P-2		0.5M+2P-3		
23	$t_{d(ENA_SPC)M}$	Delay from assertion of $\overline{SPI0_ENA}$ low to first SPI0_CLK edge. (10)	Polarity = 0, Phase = 0, to SPI0_CLK rising		3P+5		3P+5		3P+6	ns
			Polarity = 0, Phase = 1, to SPI0_CLK rising		0.5M+3P+5		0.5M+3P+5		0.5M+3P+6	
			Polarity = 1, Phase = 0, to SPI0_CLK falling		3P+5		3P+5		3P+6	
			Polarity = 1, Phase = 1, to SPI0_CLK falling		0.5M+3P+5		0.5M+3P+5		0.5M+3P+6	

(7) If $\overline{SPI0_ENA}$ is asserted immediately such that the transmission is not delayed by $\overline{SPI0_ENA}$.
(8) In the case where the master SPI is ready with new data before $\overline{SPI0_SCS}$ assertion.
(9) This delay can be increased under software control by the register bit field SPIDELAY.C2TDELAY[4:0].
(10) If $\overline{SPI0_ENA}$ was initially deasserted high and SPI0_CLK is delayed.

Table 5-75. Additional SPI0 Slave Timings, 4-Pin Enable Option (1) (2) (3)

NO.	PARAMETER			1.3V, 1.2V		1.1V		1.0V		UNIT
				MIN	MAX	MIN	MAX	MIN	MAX	
24	$t_{d(SPC_ENAH)S}$	Delay from final SPI0_CLK edge to slave deasserting $\overline{SPI0_ENA}$.	Polarity = 0, Phase = 0, from SPI0_CLK falling	1.5P-3	2.5P+17.5	1.5P-3	2.5P+20	1.5P-3	2.5P+27	ns
			Polarity = 0, Phase = 1, from SPI0_CLK falling	– 0.5M+1.5P-3	– 0.5M+2.5P+17.5	– 0.5M+1.5P-3	– 0.5M+2.5P+20	– 0.5M+1.5P-3	– 0.5M+2.5P+27	
			Polarity = 1, Phase = 0, from SPI0_CLK rising	1.5P-3	2.5P+17.5	1.5P-3	2.5P+20	1.5P-3	2.5P+27	
			Polarity = 1, Phase = 1, from SPI0_CLK rising	– 0.5M+1.5P-3	– 0.5+2.5P+17.5	– 0.5M+1.5P-3	– 0.5+2.5P+20	– 0.5M+1.5P-3	– 0.5+2.5P+27	

(1) These parameters are in addition to the general timings for SPI slave modes (Table 5-71).
(2) P = SYSCLK2 period; M = $t_{c(SPC)M}$ (SPI master bit clock period)
(3) Figure shows only Polarity = 0, Phase = 0 as an example. Table gives parameters for all four slave clocking modes.

Copyright © 2011–2013, Texas Instruments Incorporated

Table 5-76. Additional SPI0 Slave Timings, 4-Pin Chip Select Option (1) (2) (3)

NO.	PARAMETER			1.3V, 1.2V		1.1V		1.0V		UNIT
				MIN	MAX	MIN	MAX	MIN	MAX	
25	$t_{d(SCSL_SPC)S}$	Required delay from $\overline{SPI0_SCS}$ asserted at slave to first SPI0_CLK edge at slave.		P + 1.5		P + 1.5		P + 1.5		ns
26	$t_{d(SPC_SCSH)S}$	Required delay from final SPI0_CLK edge before $\overline{SPI0_SCS}$ is deasserted.	Polarity = 0, Phase = 0, from SPI0_CLK falling	0.5M+P+4		0.5M+P+4		0.5M+P+5		ns
			Polarity = 0, Phase = 1, from SPI0_CLK falling	P+4		P+4		P+5		
			Polarity = 1, Phase = 0, from SPI0_CLK rising	0.5M+P+4		0.5M+P+4		0.5M+P+5		
			Polarity = 1, Phase = 1, from SPI0_CLK rising	P+4		P+4		P+5		
27	$t_{ena(SCSL_SOMI)S}$	Delay from master asserting $\overline{SPI0_SCS}$ to slave driving SPI0_SOMI valid			P+17.5		P+20		P+27	ns
28	$t_{dis(SCSH_SOMI)S}$	Delay from master deasserting $\overline{SPI0_SCS}$ to slave 3-stating SPI0_SOMI			P+17.5		P+20		P+27	ns

(1) These parameters are in addition to the general timings for SPI slave modes (Table 5-71).
(2) P = SYSCLK2 period; M = $t_{c(SPC)M}$ (SPI master bit clock period)
(3) Figure shows only Polarity = 0, Phase = 0 as an example. Table gives parameters for all four slave clocking modes.

Table 5-77. Additional SPI0 Slave Timings, 5-Pin Option (1) (2) (3)

NO.	PARAMETER			1.3V, 1.2V		1.1V		1.0V		UNIT
				MIN	MAX	MIN	MAX	MIN	MAX	
25	$t_{d(SCSL_SPC)S}$	Required delay from $\overline{SPI0_SCS}$ asserted at slave to first SPI0_CLK edge at slave.		P + 1.5		P + 1.5		P + 1.5		ns
26	$t_{d(SPC_SCSH)S}$	Required delay from final SPI0_CLK edge before $\overline{SPI0_SCS}$ is deasserted.	Polarity = 0, Phase = 0, from SPI0_CLK falling	0.5M+P+4		0.5M+P+4		0.5M+P+5		ns
			Polarity = 0, Phase = 1, from SPI0_CLK falling	P+4		P+4		P+5		
			Polarity = 1, Phase = 0, from SPI0_CLK rising	0.5M+P+4		0.5M+P+4		0.5M+P+5		
			Polarity = 1, Phase = 1, from SPI0_CLK rising	P+4		P+4		P+5		
27	$t_{ena(SCSL_SOMI)S}$	Delay from master asserting $\overline{SPI0_SCS}$ to slave driving SPI0_SOMI valid			P+17.5		P+20		P+27	ns
28	$t_{dis(SCSH_SOMI)S}$	Delay from master deasserting $\overline{SPI0_SCS}$ to slave 3-stating SPI0_SOMI			P+17.5		P+20		P+27	ns
29	$t_{ena(SCSL_ENA)S}$	Delay from master deasserting $\overline{SPI0_SCS}$ to slave driving $\overline{SPI0_ENA}$ valid			17.5		20		27	ns

(1) These parameters are in addition to the general timings for SPI slave modes (Table 5-71).
(2) P = SYSCLK2 period; M = $t_{c(SPC)M}$ (SPI master bit clock period)
(3) Figure shows only Polarity = 0, Phase = 0 as an example. Table gives parameters for all four slave clocking modes.

Copyright © 2011–2013, Texas Instruments Incorporated

Table 5-77. Additional SPI0 Slave Timings, 5-Pin Option (1) (2) (3) (continued)

NO.	PARAMETER			1.3V, 1.2V		1.1V		1.0V		UNIT
				MIN	MAX	MIN	MAX	MIN	MAX	
30	$t_{dis(SPC_ENA)S}$	Delay from final clock receive edge on SPI0_CLK to slave 3-stating or driving high $\overline{SPI0_ENA}$. (4)	Polarity = 0, Phase = 0, from SPI0_CLK falling		2.5P+17.5		2.5P+20		2.5P+27	ns
			Polarity = 0, Phase = 1, from SPI0_CLK rising		2.5P+17.5		2.5P+20		2.5P+27	
			Polarity = 1, Phase = 0, from SPI0_CLK rising		2.5P+17.5		2.5P+20		2.5P+27	
			Polarity = 1, Phase = 1, from SPI0_CLK falling		2.5P+17.5		2.5P+20		2.5P+27	

(4) $\overline{SPI0_ENA}$ is driven low after the transmission completes if the SPIINT0.ENABLE_HIGHZ bit is programmed to 0. Otherwise it is tri-stated. If tri-stated, an external pullup resistor should be used to provide a valid level to the master. This option is useful when tying several SPI slave devices to a single master.

Copyright © 2011–2013, Texas Instruments Incorporated

Table 5-78. General Timing Requirements for SPI1 Master Modes[1]

NO.	PARAMETER			1.3V, 1.2V		1.1V		1.0V		UNIT
				MIN	MAX	MIN	MAX	MIN	MAX	
1	$t_{c(SPC)M}$	Cycle Time, SPI1_CLK, All Master Modes		20[2]	256P	30[2]	256P	40[2]	256P	ns
2	$t_{w(SPCH)M}$	Pulse Width High, SPI1_CLK, All Master Modes		0.5M-1		0.5M-1		0.5M-1		ns
3	$t_{w(SPCL)M}$	Pulse Width Low, SPI1_CLK, All Master Modes		0.5M-1		0.5M-1		0.5M-1		ns
4,5	$t_{d(SIMO_SPC)M}$	Delay, initial data bit valid on SPI1_SIMO to initial edge on SPI1_CLK[3]	Polarity = 0, Phase = 0, to SPI1_CLK rising		5		5		6	ns
			Polarity = 0, Phase = 1, to SPI1_CLK rising		-0.5M+5		-0.5M+5		-0.5M+6	
			Polarity = 1, Phase = 0, to SPI1_CLK falling		5		5		6	
			Polarity = 1, Phase = 1, to SPI1_CLK falling		-0.5M+5		-0.5M+5		-0.5M+6	
5	$t_{d(SPC_SIMO)M}$	Delay, subsequent bits valid on SPI1_SIMO after transmit edge of SPI1_CLK	Polarity = 0, Phase = 0, from SPI1_CLK rising		5		5		6	ns
			Polarity = 0, Phase = 1, from SPI1_CLK falling		5		5		6	
			Polarity = 1, Phase = 0, from SPI1_CLK falling		5		5		6	
			Polarity = 1, Phase = 1, from SPI1_CLK rising		5		5		6	
6	$t_{oh(SPC_SIMO)M}$	Output hold time, SPI1_SIMO valid after receive edge of SPI1_CLK	Polarity = 0, Phase = 0, from SPI1_CLK falling	0.5M-3		0.5M-3		0.5M-3		ns
			Polarity = 0, Phase = 1, from SPI1_CLK rising	0.5M-3		0.5M-3		0.5M-3		
			Polarity = 1, Phase = 0, from SPI1_CLK rising	0.5M-3		0.5M-3		0.5M-3		
			Polarity = 1, Phase = 1, from SPI1_CLK falling	0.5M-3		0.5M-3		0.5M-3		
7	$t_{su(SOMI_SPC)M}$	Input Setup Time, SPI1_SOMI valid before receive edge of SPI1_CLK	Polarity = 0, Phase = 0, to SPI1_CLK falling	1.5		1.5		1.5		ns
			Polarity = 0, Phase = 1, to SPI1_CLK rising	1.5		1.5		1.5		
			Polarity = 1, Phase = 0, to SPI1_CLK rising	1.5		1.5		1.5		
			Polarity = 1, Phase = 1, to SPI1_CLK falling	1.5		1.5		1.5		
8	$t_{ih(SPC_SOMI)M}$	Input Hold Time, SPI1_SOMI valid after receive edge of SPI1_CLK	Polarity = 0, Phase = 0, from SPI1_CLK falling	4		5		6		ns
			Polarity = 0, Phase = 1, from SPI1_CLK rising	4		5		6		
			Polarity = 1, Phase = 0, from SPI1_CLK rising	4		5		6		
			Polarity = 1, Phase = 1, from SPI1_CLK falling	4		5		6		

(1) P = SYSCLK2 period; M = $t_{c(SPC)M}$ (SPI master bit clock period)
(2) This timing is limited by the timing shown or 3P, whichever is greater.
(3) First bit may be MSB or LSB depending upon SPI configuration. MO(0) refers to first bit and MO(n) refers to last bit output on SPI1_SIMO. MI(0) refers to the first bit input and MI(n) refers to the last bit input on SPI1_SOMI.

Table 5-79. General Timing Requirements for SPI1 Slave Modes[1]

NO.	PARAMETER			1.3V, 1.2V		1.1V		1.0V		UNIT
				MIN	MAX	MIN	MAX	MIN	MAX	
9	$t_{c(SPC)S}$	Cycle Time, SPI1_CLK, All Slave Modes		40[2]		50[2]		60[2]		ns
10	$t_{w(SPCH)S}$	Pulse Width High, SPI1_CLK, All Slave Modes		18		22		27		ns
11	$t_{w(SPCL)S}$	Pulse Width Low, SPI1_CLK, All Slave Modes		18		22		27		ns
12	$t_{su(SOMI_SPC)S}$	Setup time, transmit data written to SPI before initial clock edge from master.[3] [4]	Polarity = 0, Phase = 0, to SPI1_CLK rising	2P		2P		2P		ns
			Polarity = 0, Phase = 1, to SPI1_CLK rising	2P		2P		2P		
			Polarity = 1, Phase = 0, to SPI1_CLK falling	2P		2P		2P		
			Polarity = 1, Phase = 1, to SPI1_CLK falling	2P		2P		2P		
13	$t_{d(SPC_SOMI)S}$	Delay, subsequent bits valid on SPI1_SOMI after transmit edge of SPI1_CLK	Polarity = 0, Phase = 0, from SPI1_CLK rising		15		17		19	ns
			Polarity = 0, Phase = 1, from SPI1_CLK falling		15		17		19	
			Polarity = 1, Phase = 0, from SPI1_CLK falling		15		17		19	
			Polarity = 1, Phase = 1, from SPI1_CLK rising		15		17		19	
14	$t_{oh(SPC_SOMI)S}$	Output hold time, SPI1_SOMI valid after receive edge of SPI1_CLK	Polarity = 0, Phase = 0, from SPI1_CLK falling	0.5S-4		0.5S-10		0.5S-12		ns
			Polarity = 0, Phase = 1, from SPI1_CLK rising	0.5S-4		0.5S-10		0.5S-12		
			Polarity = 1, Phase = 0, from SPI1_CLK rising	0.5S-4		0.5S-10		0.5S-12		
			Polarity = 1, Phase = 1, from SPI1_CLK falling	0.5S-4		0.5S-10		0.5S-12		
15	$t_{su(SIMO_SPC)S}$	Input Setup Time, SPI1_SIMO valid before receive edge of SPI1_CLK	Polarity = 0, Phase = 0, to SPI1_CLK falling	1.5		1.5		1.5		ns
			Polarity = 0, Phase = 1, to SPI1_CLK rising	1.5		1.5		1.5		
			Polarity = 1, Phase = 0, to SPI1_CLK rising	1.5		1.5		1.5		
			Polarity = 1, Phase = 1, to SPI1_CLK falling	1.5		1.5		1.5		
16	$t_{ih(SPC_SIMO)S}$	Input Hold Time, SPI1_SIMO valid after receive edge of SPI1_CLK	Polarity = 0, Phase = 0, from SPI1_CLK falling	4		5		6		ns
			Polarity = 0, Phase = 1, from SPI1_CLK rising	4		5		6		
			Polarity = 1, Phase = 0, from SPI1_CLK rising	4		5		6		
			Polarity = 1, Phase = 1, from SPI1_CLK falling	4		5		6		

(1) P = SYSCLK2 period; S = $t_{c(SPC)S}$ (SPI slave bit clock period)
(2) This timing is limited by the timing shown or 3P, whichever is greater.
(3) First bit may be MSB or LSB depending upon SPI configuration. SO(0) refers to first bit and SO(n) refers to last bit output on SPI1_SOMI. SI(0) refers to the first bit input and SI(n) refers to the last bit input on SPI1_SIMO.
(4) Measured from the termination of the write of new data to the SPI module, In analyzing throughput requirements, additional internal bus cycles must be accounted for to allow data to be written to the SPI module by the DSP CPU.

 Copyright © 2011–2013, Texas Instruments Incorporated

Table 5-80. Additional[(1)] SPI1 Master Timings, 4-Pin Enable Option[(2) (3)]

NO.	PARAMETER			1.3V, 1.2V		1.1V		1.0V		UNIT
				MIN	MAX	MIN	MAX	MIN	MAX	
17	$t_{d(EN\ A_SPC)M}$	Delay from slave assertion of SPI1_ENA active to first SPI1_CLK from master.[(4)]	Polarity = 0, Phase = 0, to SPI1_CLK rising		3P+5		3P+5		3P+6	ns
			Polarity = 0, Phase = 1, to SPI1_CLK rising		0.5M+3P+5		0.5M+3P+5		0.5M+3P+6	
			Polarity = 1, Phase = 0, to SPI1_CLK falling		3P+5		3P+5		3P+6	
			Polarity = 1, Phase = 1, to SPI1_CLK falling		0.5M+3P+5		0.5M+3P+5		0.5M+3P+6	
18	$t_{d(SPC_ENA)M}$	Max delay for slave to deassert SPI1_ENA after final SPI1_CLK edge to ensure master does not begin the next transfer.[(5)]	Polarity = 0, Phase = 0, from SPI1_CLK falling		0.5M+P+5		0.5M+P+5		0.5M+P+6	ns
			Polarity = 0, Phase = 1, from SPI1_CLK falling		P+5		P+5		P+6	
			Polarity = 1, Phase = 0, from SPI1_CLK rising		0.5M+P+5		0.5M+P+5		0.5M+P+6	
			Polarity = 1, Phase = 1, from SPI1_CLK rising		P+5		P+5		P+6	

(1) These parameters are in addition to the general timings for SPI master modes (Table 5-78).
(2) P = SYSCLK2 period; M = $t_{c(SPC)M}$ (SPI master bit clock period)
(3) Figure shows only Polarity = 0, Phase = 0 as an example. Table gives parameters for all four master clocking modes.
(4) In the case where the master SPI is ready with new data before SPI1_ENA assertion.
(5) In the case where the master SPI is ready with new data before SPI1_ENA deassertion.

Table 5-81. Additional[(1)] SPI1 Master Timings, 4-Pin Chip Select Option[(2) (3)]

NO.	PARAMETER			1.3V, 1.2V		1.1V		1.0V		UNIT
				MIN	MAX	MIN	MAX	MIN	MAX	
19	$t_{d(SCS_SPC)M}$	Delay from SPI1_SCS active to first SPI1_CLK[(4) (5)]	Polarity = 0, Phase = 0, to SPI1_CLK rising	2P-1		2P-5		2P-6		ns
			Polarity = 0, Phase = 1, to SPI1_CLK rising	0.5M+2P-1		0.5M+2P-5		0.5M+2P-6		
			Polarity = 1, Phase = 0, to SPI1_CLK falling	2P-1		2P-5		2P-6		
			Polarity = 1, Phase = 1, to SPI1_CLK falling	0.5M+2P-1		0.5M+2P-5		0.5M+2P-6		
20	$t_{d(SPC_SCS)M}$	Delay from final SPI1_CLK edge to master deasserting SPI1_SCS[(6) (7)]	Polarity = 0, Phase = 0, from SPI1_CLK falling	0.5M+P-1		0.5M+P-5		0.5M+P-6		ns
			Polarity = 0, Phase = 1, from SPI1_CLK falling	P-1		P-5		P-6		
			Polarity = 1, Phase = 0, from SPI1_CLK rising	0.5M+P-1		0.5M+P-5		0.5M+P-6		
			Polarity = 1, Phase = 1, from SPI1_CLK rising	P-1		P-5		P-6		

(1) These parameters are in addition to the general timings for SPI master modes (Table 5-78).
(2) P = SYSCLK2 period; M = $t_{c(SPC)M}$ (SPI master bit clock period)
(3) Figure shows only Polarity = 0, Phase = 0 as an example. Table gives parameters for all four master clocking modes.
(4) In the case where the master SPI is ready with new data before SPI1_SCS assertion.
(5) This delay can be increased under software control by the register bit field SPIDELAY.C2TDELAY[4:0].
(6) Except for modes when SPIDAT1.CSHOLD is enabled and there is additional data to transmit. In this case, SPI1_SCS will remain asserted.
(7) This delay can be increased under software control by the register bit field SPIDELAY.T2CDELAY[4:0].

Table 5-82. Additional[(1)] SPI1 Master Timings, 5-Pin Option[(2)] [(3)]

NO.	PARAMETER			1.3V, 1.2V		1.1V		1.0V		UNIT
				MIN	MAX	MIN	MAX	MIN	MAX	
18	$t_{d(SPC_ENA)M}$	Max delay for slave to deassert $\overline{\text{SPI1_ENA}}$ after final SPI1_CLK edge to ensure master does not begin the next transfer.[(4)]	Polarity = 0, Phase = 0, from SPI1_CLK falling		0.5M+P+5		0.5M+P+5		0.5M+P+6	ns
			Polarity = 0, Phase = 1, from SPI1_CLK falling		P+5		P+5		P+6	
			Polarity = 1, Phase = 0, from SPI1_CLK rising		0.5M+P+5		0.5M+P+5		0.5M+P+6	
			Polarity = 1, Phase = 1, from SPI1_CLK rising		P+5		P+5		P+6	
20	$t_{d(SPC_SCS)M}$	Delay from final SPI1_CLK edge to master deasserting $\overline{\text{SPI1_SCS}}$ [(5)] [(6)]	Polarity = 0, Phase = 0, from SPI1_CLK falling	0.5M+P-1		0.5M+P-5		0.5M+P-6		ns
			Polarity = 0, Phase = 1, from SPI1_CLK falling	P-1		P-5		P-6		
			Polarity = 1, Phase = 0, from SPI1_CLK rising	0.5M+P-1		0.5M+P-5		0.5M+P-6		
			Polarity = 1, Phase = 1, from SPI1_CLK rising	P-1		P-5		P-6		
21	$t_{d(SCSL_ENAL)M}$	Max delay for slave SPI to drive $\overline{\text{SPI1_ENA}}$ valid after master asserts $\overline{\text{SPI1_SCS}}$ to delay the master from beginning the next transfer,			C2TDELAY+P		C2TDELAY+P		C2TDELAY+P	ns
22	$t_{d(SCS_SPC)M}$	Delay from $\overline{\text{SPI1_SCS}}$ active to first SPI1_CLK[(7)] [(8)] [(9)]	Polarity = 0, Phase = 0, to SPI1_CLK rising	2P-1		2P-5		2P-6		ns
			Polarity = 0, Phase = 1, to SPI1_CLK rising	0.5M+2P-1		0.5M+2P-5		0.5M+2P-6		
			Polarity = 1, Phase = 0, to SPI1_CLK falling	2P-1		2P-5		2P-6		
			Polarity = 1, Phase = 1, to SPI1_CLK falling	0.5M+2P-1		0.5M+2P-5		0.5M+2P-6		

(1) These parameters are in addition to the general timings for SPI master modes (Table 5-79).
(2) P = SYSCLK2 period; M = $t_{c(SPC)M}$ (SPI master bit clock period)
(3) Figure shows only Polarity = 0, Phase = 0 as an example. Table gives parameters for all four master clocking modes.
(4) In the case where the master SPI is ready with new data before $\overline{\text{SPI1_ENA}}$ deassertion.
(5) Except for modes when SPIDAT1.CSHOLD is enabled and there is additional data to transmit. In this case, $\overline{\text{SPI1_SCS}}$ will remain asserted.
(6) This delay can be increased under software control by the register bit field SPIDELAY.T2CDELAY[4:0].
(7) If $\overline{\text{SPI1_ENA}}$ is asserted immediately such that the transmission is not delayed by $\overline{\text{SPI1_ENA}}$.
(8) In the case where the master SPI is ready with new data before $\overline{\text{SPI1_SCS}}$ assertion.
(9) This delay can be increased under software control by the register bit field SPIDELAY.C2TDELAY[4:0].

Copyright © 2011–2013, Texas Instruments Incorporated

Table 5-82. Additional[(1)] SPI1 Master Timings, 5-Pin Option[(2) (3)] (continued)

NO.	PARAMETER			1.3V, 1.2V		1.1V		1.0V		UNIT
				MIN	MAX	MIN	MAX	MIN	MAX	
23	$t_{d(ENA_SPC)M}$	Delay from assertion of $\overline{\text{SPI1_ENA}}$ low to first SPI1_CLK edge.[(10)]	Polarity = 0, Phase = 0, to SPI1_CLK rising		3P+5		3P+5		3P+6	ns
			Polarity = 0, Phase = 1, to SPI1_CLK rising		0.5M+3P+5		0.5M+3P+5		0.5M+3P+6	
			Polarity = 1, Phase = 0, to SPI1_CLK falling		3P+5		3P+5		3P+6	
			Polarity = 1, Phase = 1, to SPI1_CLK falling		0.5M+3P+5		0.5M+3P+5		0.5M+3P+6	

(10) If $\overline{\text{SPI1_ENA}}$ was initially deasserted high and SPI1_CLK is delayed.

Table 5-83. Additional[(1)] SPI1 Slave Timings, 4-Pin Enable Option[(2) (3)]

NO.	PARAMETER			1.3V, 1.2V		1.1V		1.0V		UNIT
				MIN	MAX	MIN	MAX	MIN	MAX	
24	$t_{d(SPC_ENAH)S}$	Delay from final SPI1_CLK edge to slave deasserting $\overline{\text{SPI1_ENA}}$.	Polarity = 0, Phase = 0, from SPI1_CLK falling	1.5P-3	2.5P+15	1.5P-10	2.5P+17	1.5P-12	2.5P+19	ns
			Polarity = 0, Phase = 1, from SPI1_CLK falling	–0.5M+1.5P-3	–0.5M+2.5P+15	–0.5M+1.5P-10	–0.5M+2.5P+17	–0.5M+1.5P-12	–0.5M+2.5P+19	
			Polarity = 1, Phase = 0, from SPI1_CLK rising	1.5P-3	2.5P+15	1.5P-10	2.5P+17	1.5P-12	2.5P+19	
			Polarity = 1, Phase = 1, from SPI1_CLK rising	–0.5M+1.5P-3	–0.5M+2.5P+15	–0.5M+1.5P-10	–0.5M+2.5P+17	–0.5M+1.5P-12	–0.5M+2.5P+19	

(1) These parameters are in addition to the general timings for SPI slave modes (Table 5-79).
(2) P = SYSCLK2 period; M = $t_{c(SPC)M}$ (SPI master bit clock period)
(3) Figure shows only Polarity = 0, Phase = 0 as an example. Table gives parameters for all four slave clocking modes.

Table 5-84. Additional[(1)] SPI1 Slave Timings, 4-Pin Chip Select Option[(2) (3)]

NO.	PARAMETER		1.3V, 1.2V		1.1V		1.0V		UNIT
			MIN	MAX	MIN	MAX	MIN	MAX	
25	$t_{d(SCSL_SPC)S}$	Required delay from $\overline{\text{SPI1_SCS}}$ asserted at slave to first SPI1_CLK edge at slave.	P+1.5		P+1.5		P+1.5		ns

(1) These parameters are in addition to the general timings for SPI slave modes (Table 5-79).
(2) P = SYSCLK2 period; M = $t_{c(SPC)M}$ (SPI master bit clock period)
(3) Figure shows only Polarity = 0, Phase = 0 as an example. Table gives parameters for all four slave clocking modes.

Table 5-84. Additional[(1)] SPI1 Slave Timings, 4-Pin Chip Select Option[(2) (3)] (continued)

NO.	PARAMETER			1.3V, 1.2V		1.1V		1.0V		UNIT
				MIN	MAX	MIN	MAX	MIN	MAX	
26	$t_{d(SPC_SCSH)S}$	Required delay from final SPI1_CLK edge before $\overline{SPI1_SCS}$ is deasserted.	Polarity = 0, Phase = 0, from SPI1_CLK falling	0.5M+P+4		0.5M+P+5		0.5M+P+6		ns
			Polarity = 0, Phase = 1, from SPI1_CLK falling	P+4		P+5		P+6		
			Polarity = 1, Phase = 0, from SPI1_CLK rising	0.5M+P+4		0.5M+P+5		0.5M+P+6		
			Polarity = 1, Phase = 1, from SPI1_CLK rising	P+4		P+5		P+6		
27	$t_{ena(SCSL_SOMI)S}$	Delay from master asserting $\overline{SPI1_SCS}$ to slave driving SPI1_SOMI valid			P+15		P+17		P+19	ns
28	$t_{dis(SCSH_SOMI)S}$	Delay from master deasserting $\overline{SPI1_SCS}$ to slave 3-stating SPI1_SOMI			P+15		P+17		P+19	ns

Table 5-85. Additional[(1)] SPI1 Slave Timings, 5-Pin Option[(2) (3)]

NO.	PARAMETER			1.3V, 1.2V		1.1V		1.0V		UNIT
				MIN	MAX	MIN	MAX	MIN	MAX	
25	$t_{d(SCSL_SPC)S}$	Required delay from $\overline{SPI1_SCS}$ asserted at slave to first SPI1_CLK edge at slave.		P+1.5		P+1.5		P+1.5		ns
26	$t_{d(SPC_SCSH)S}$	Required delay from final SPI1_CLK edge before $\overline{SPI1_SCS}$ is deasserted.	Polarity = 0, Phase = 0, from SPI1_CLK falling	0.5M+P+4		0.5M+P+5		0.5M+P+6		ns
			Polarity = 0, Phase = 1, from SPI1_CLK falling	P+4		P+5		P+6		
			Polarity = 1, Phase = 0, from SPI1_CLK rising	0.5M+P+4		0.5M+P+5		0.5M+P+6		
			Polarity = 1, Phase = 1, from SPI1_CLK rising	P+4		P+5		P+6		
27	$t_{ena(SCSL_SOMI)S}$	Delay from master asserting $\overline{SPI1_SCS}$ to slave driving SPI1_SOMI valid			P+15		P+17		P+19	ns
28	$t_{dis(SCSH_SOMI)S}$	Delay from master deasserting $\overline{SPI1_SCS}$ to slave 3-stating SPI1_SOMI			P+15		P+17		P+19	ns
29	$t_{ena(SCSL_ENA)S}$	Delay from master deasserting $\overline{SPI1_SCS}$ to slave driving $\overline{SPI1_ENA}$ valid			15		17		19	ns

(1) These parameters are in addition to the general timings for SPI slave modes (Table 5-79).
(2) P = SYSCLK2 period; M = $t_{c(SPC)M}$ (SPI master bit clock period)
(3) Figure shows only Polarity = 0, Phase = 0 as an example. Table gives parameters for all four slave clocking modes.

Copyright © 2011–2013, Texas Instruments Incorporated

Table 5-85. Additional[(1)] SPI1 Slave Timings, 5-Pin Option[(2) (3)] (continued)

NO.	PARAMETER			1.3V, 1.2V		1.1V		1.0V		UNIT
				MIN	MAX	MIN	MAX	MIN	MAX	
30	$t_{dis(SPC_ENA)S}$	Delay from final clock receive edge on SPI1_CLK to slave 3-stating or driving high $\overline{SPI1_ENA}$.[(4)]	Polarity = 0, Phase = 0, from SPI1_CLK falling		2.5P+15		2.5P+17		2.5P+19	ns
			Polarity = 0, Phase = 1, from SPI1_CLK rising		2.5P+15		2.5P+17		2.5P+19	
			Polarity = 1, Phase = 0, from SPI1_CLK rising		2.5P+15		2.5P+17		2.5P+19	
			Polarity = 1, Phase = 1, from SPI1_CLK falling		2.5P+15		2.5P+17		2.5P+19	

(4) $\overline{SPI1_ENA}$ is driven low after the transmission completes if the SPIINT0.ENABLE_HIGHZ bit is programmed to 0. Otherwise it is tri-stated. If tri-stated, an external pullup resistor should be used to provide a valid level to the master. This option is useful when tying several SPI slave devices to a single master.

Copyright © 2011–2013, Texas Instruments Incorporated

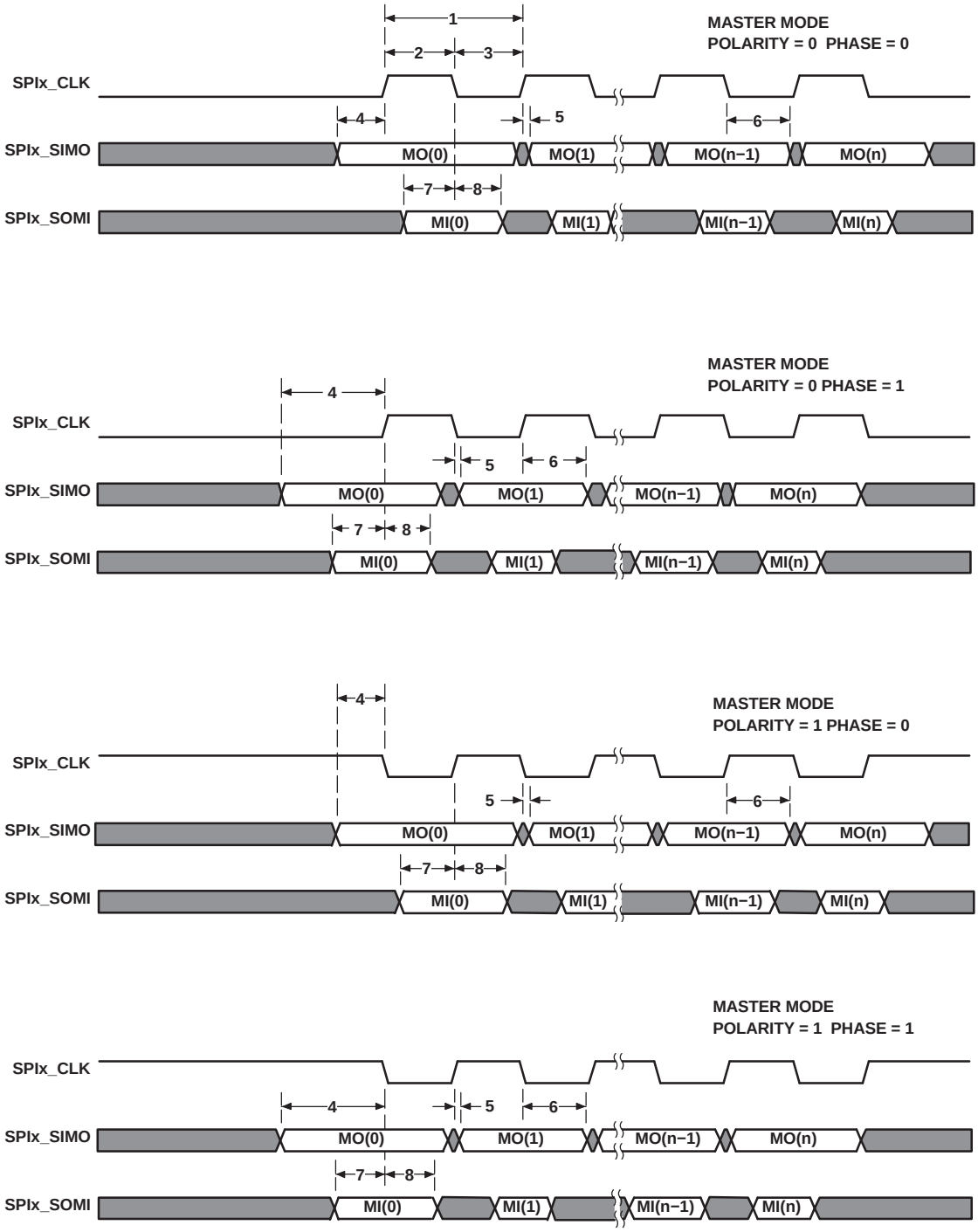

Figure 5-38. SPI Timings—Master Mode

Copyright © 2011–2013, Texas Instruments Incorporated

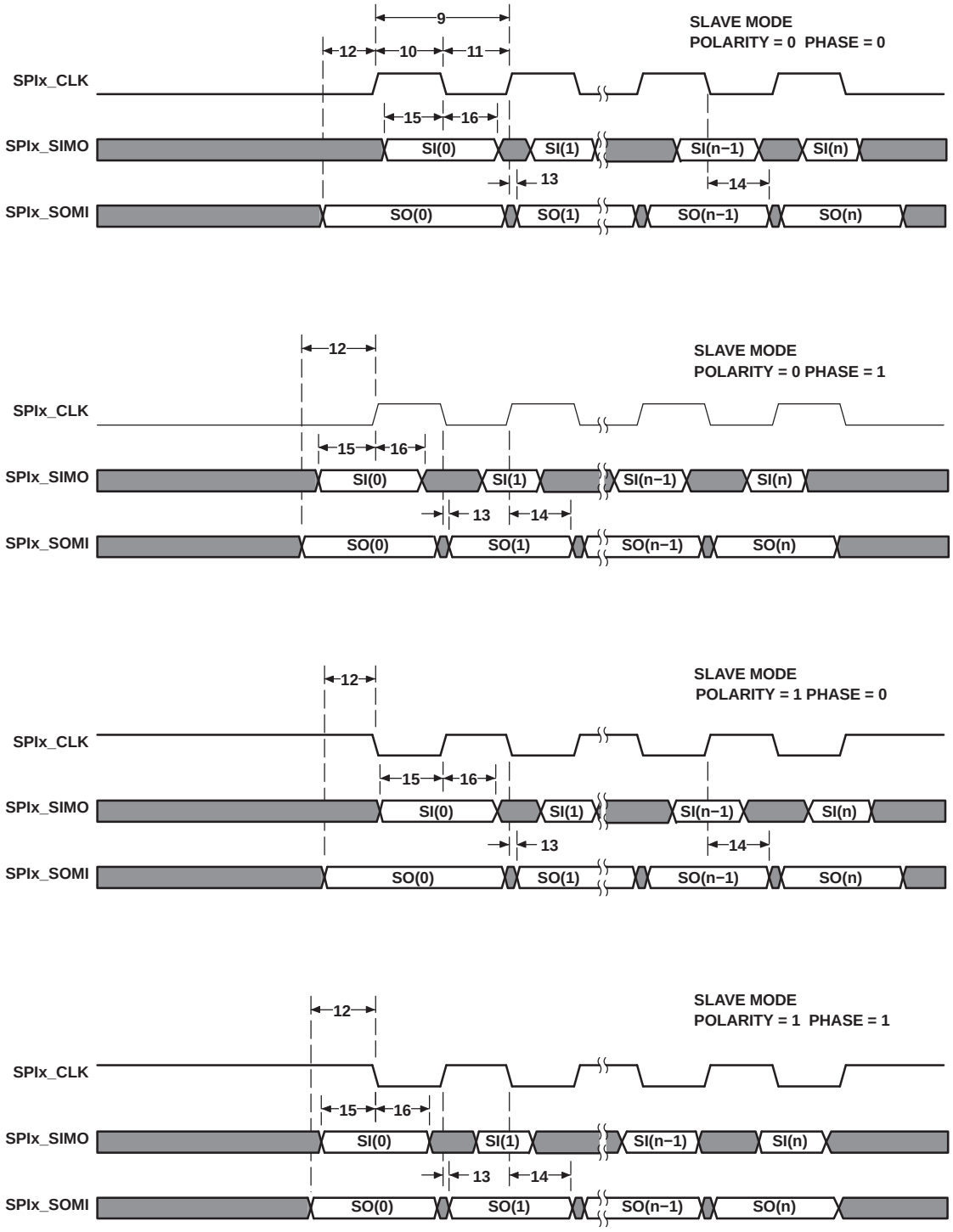

Figure 5-39. SPI Timings—Slave Mode

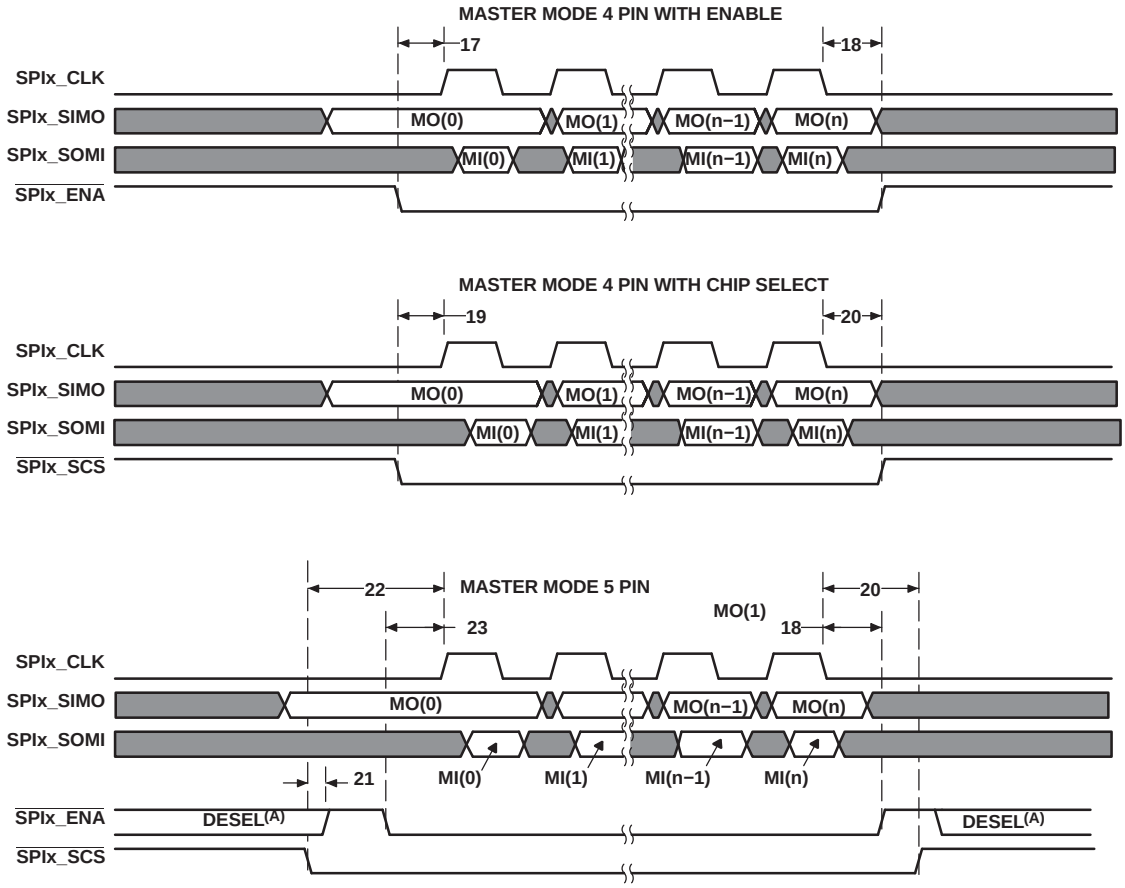

A. DESELECTED IS PROGRAMMABLE EITHER HIGH OR 3−STATE (REQUIRES EXTERNAL PULLUP)

Figure 5-40. SPI Timings—Master Mode (4-Pin and 5-Pin)

Copyright © 2011–2013, Texas Instruments Incorporated

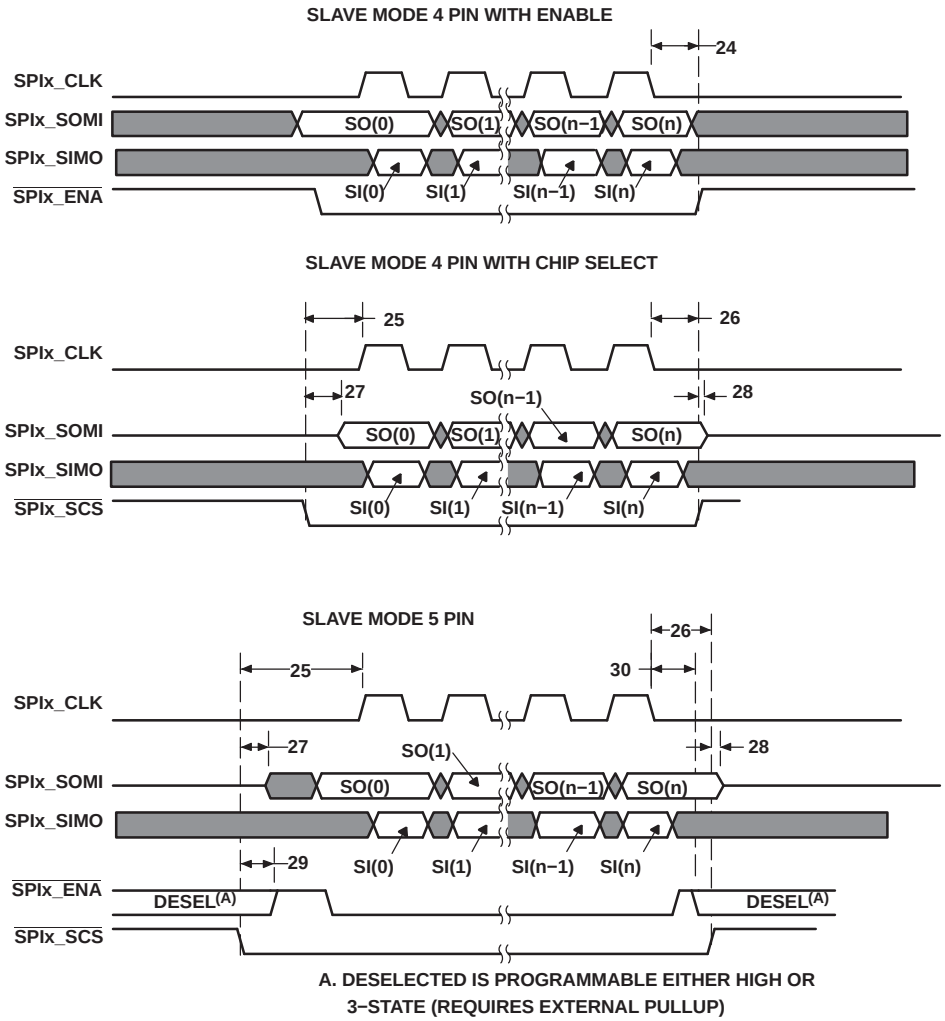

Figure 5-41. SPI Timings—Slave Mode (4-Pin and 5-Pin)

5.18 Inter-Integrated Circuit Serial Ports (I2C)

5.18.1 I2C Device-Specific Information

Each I2C port supports:

- Compatible with Philips® I2C Specification Revision 2.1 (January 2000)
- Fast Mode up to 400 Kbps (no fail-safe I/O buffers)
- Noise Filter to Remove Noise 50 ns or less
- Seven- and Ten-Bit Device Addressing Modes
- Master (Transmit/Receive) and Slave (Transmit/Receive) Functionality
- Events: DMA, Interrupt, or Polling
- General-Purpose I/O Capability if not used as I2C

Figure 5-42 is block diagram of the device I2C Module.

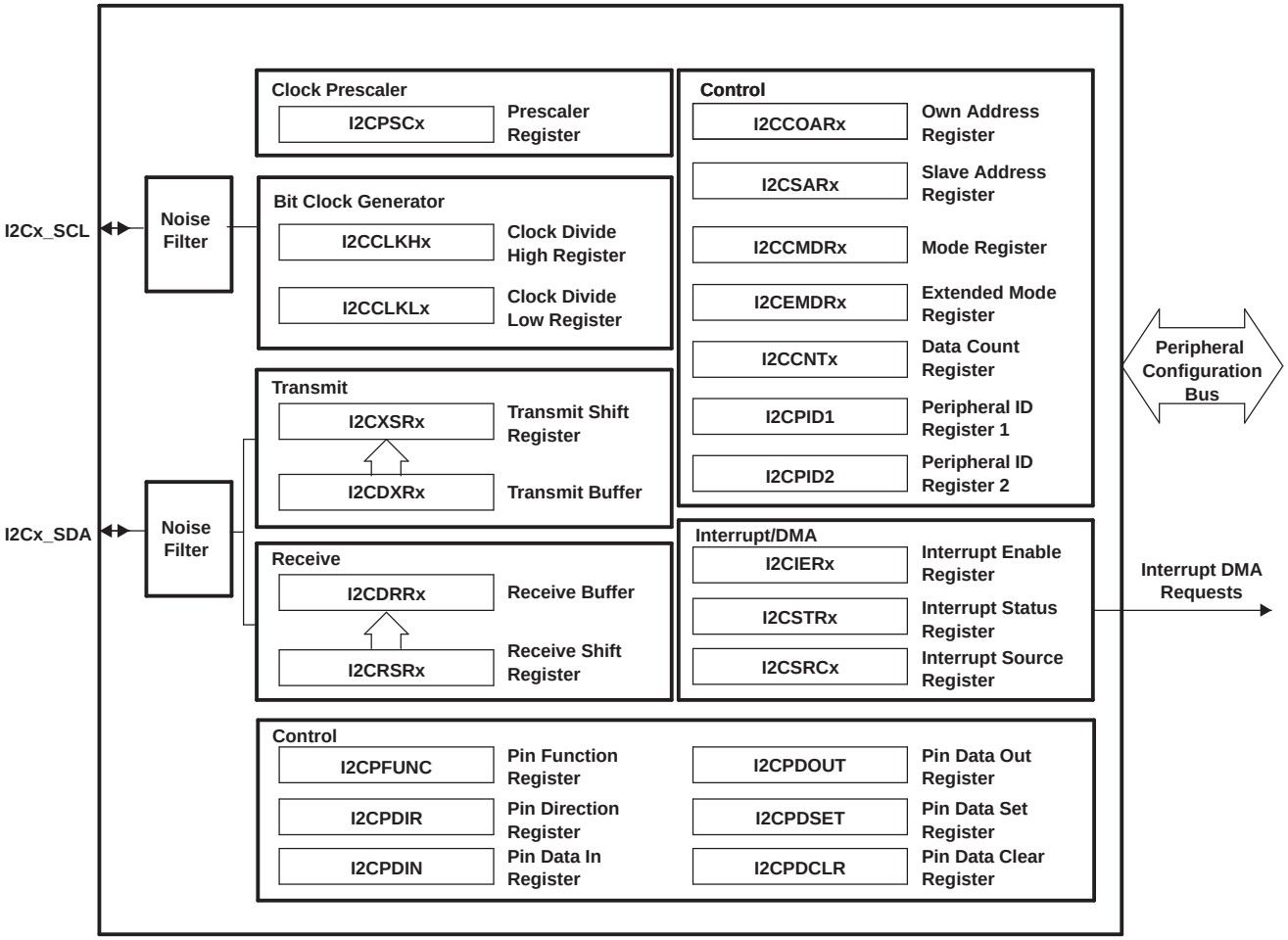

Figure 5-42. I2C Module Block Diagram

Copyright © 2011–2013, Texas Instruments Incorporated

5.18.2 I2C Peripheral Registers Description(s)

Table 5-86 is the list of the I2C registers.

Table 5-86. Inter-Integrated Circuit (I2C) Registers

I2C0 BYTE ADDRESS	I2C1 BYTE ADDRESS	ACRONYM	REGISTER DESCRIPTION
0x01C2 2000	0x01E2 8000	ICOAR	I2C Own Address Register
0x01C2 2004	0x01E2 8004	ICIMR	I2C Interrupt Mask Register
0x01C2 2008	0x01E2 8008	ICSTR	I2C Interrupt Status Register
0x01C2 200C	0x01E2 800C	ICCLKL	I2C Clock Low-Time Divider Register
0x01C2 2010	0x01E2 8010	ICCLKH	I2C Clock High-Time Divider Register
0x01C2 2014	0x01E2 8014	ICCNT	I2C Data Count Register
0x01C2 2018	0x01E2 8018	ICDRR	I2C Data Receive Register
0x01C2 201C	0x01E2 801C	ICSAR	I2C Slave Address Register
0x01C2 2020	0x01E2 8020	ICDXR	I2C Data Transmit Register
0x01C2 2024	0x01E2 8024	ICMDR	I2C Mode Register
0x01C2 2028	0x01E2 8028	ICIVR	I2C Interrupt Vector Register
0x01C2 202C	0x01E2 802C	ICEMDR	I2C Extended Mode Register
0x01C2 2030	0x01E2 8030	ICPSC	I2C Prescaler Register
0x01C2 2034	0x01E2 8034	REVID1	I2C Revision Identification Register 1
0x01C2 2038	0x01E2 8038	REVID2	I2C Revision Identification Register 2
0x01C2 2048	0x01E2 8048	ICPFUNC	I2C Pin Function Register
0x01C2 204C	0x01E2 804C	ICPDIR	I2C Pin Direction Register
0x01C2 2050	0x01E2 8050	ICPDIN	I2C Pin Data In Register
0x01C2 2054	0x01E2 8054	ICPDOUT	I2C Pin Data Out Register
0x01C2 2058	0x01E2 8058	ICPDSET	I2C Pin Data Set Register
0x01C2 205C	0x01E2 805C	ICPDCLR	I2C Pin Data Clear Register

Copyright © 2011–2013, Texas Instruments Incorporated

5.18.3 I2C Electrical Data/Timing

5.18.3.1 Inter-Integrated Circuit (I2C) Timing

Table 5-87 and Table 5-88 assume testing over recommended operating conditions (see Figure 5-43 and Figure 5-44).

Table 5-87. Timing Requirements for I2C Input

NO.	PARAMETER		1.3V, 1.2V, 1.1V, 1.0V				UNIT
			Standard Mode		Fast Mode		
			MIN	MAX	MIN	MAX	
1	$t_{c(SCL)}$	Cycle time, I2Cx_SCL	10		2.5		µs
2	$t_{su(SCLH-SDAL)}$	Setup time, I2Cx_SCL high before I2Cx_SDA low	4.7		0.6		µs
3	$t_{h(SCLL-SDAL)}$	Hold time, I2Cx_SCL low after I2Cx_SDA low	4		0.6		µs
4	$t_{w(SCLL)}$	Pulse duration, I2Cx_SCL low	4.7		1.3		µs
5	$t_{w(SCLH)}$	Pulse duration, I2Cx_SCL high	4		0.6		µs
6	$t_{su(SDA-SCLH)}$	Setup time, I2Cx_SDA before I2Cx_SCL high	250		100		ns
7	$t_{h(SDA-SCLL)}$	Hold time, I2Cx_SDA after I2Cx_SCL low	0		0	0.9	µs
8	$t_{w(SDAH)}$	Pulse duration, I2Cx_SDA high	4.7		1.3		µs
9	$t_{r(SDA)}$	Rise time, I2Cx_SDA		1000	$20 + 0.1C_b$	300	ns
10	$t_{r(SCL)}$	Rise time, I2Cx_SCL		1000	$20 + 0.1C_b$	300	ns
11	$t_{f(SDA)}$	Fall time, I2Cx_SDA		300	$20 + 0.1C_b$	300	ns
12	$t_{f(SCL)}$	Fall time, I2Cx_SCL		300	$20 + 0.1C_b$	300	ns
13	$t_{su(SCLH-SDAH)}$	Setup time, I2Cx_SCL high before I2Cx_SDA high	4		0.6		µs
14	$t_{w(SP)}$	Pulse duration, spike (must be suppressed)	N/A		0	50	ns
15	C_b	Capacitive load for each bus line		400		400	pF

Table 5-88. Switching Characteristics for I2C (1)

NO.	PARAMETER		1.3V, 1.2V, 1.1V, 1.0V				UNIT
			Standard Mode		Fast Mode		
			MIN	MAX	MIN	MAX	
16	$t_{c(SCL)}$	Cycle time, I2Cx_SCL	10		2.5		µs
17	$t_{su(SCLH-SDAL)}$	Setup time, I2Cx_SCL high before I2Cx_SDA low	4.7		0.6		µs
18	$t_{h(SDAL-SCLL)}$	Hold time, I2Cx_SCL low after I2Cx_SDA low	4		0.6		µs
19	$t_{w(SCLL)}$	Pulse duration, I2Cx_SCL low	4.7		1.3		µs
20	$t_{w(SCLH)}$	Pulse duration, I2Cx_SCL high	4		0.6		µs
21	$t_{su(SDAV-SCLH)}$	Setup time, I2Cx_SDA valid before I2Cx_SCL high	250		100		ns
22	$t_{h(SCLL-SDAV)}$	Hold time, I2Cx_SDA valid after I2Cx_SCL low	0		0	0.9	µs
23	$t_{w(SDAH)}$	Pulse duration, I2Cx_SDA high	4.7		1.3		µs
28	$t_{su(SCLH-SDAH)}$	Setup time, I2Cx_SCL high before I2Cx_SDA high	4		0.6		µs

(1) I2C must be configured correctly to meet the timings in Table 5-88.

Copyright © 2011–2013, Texas Instruments Incorporated

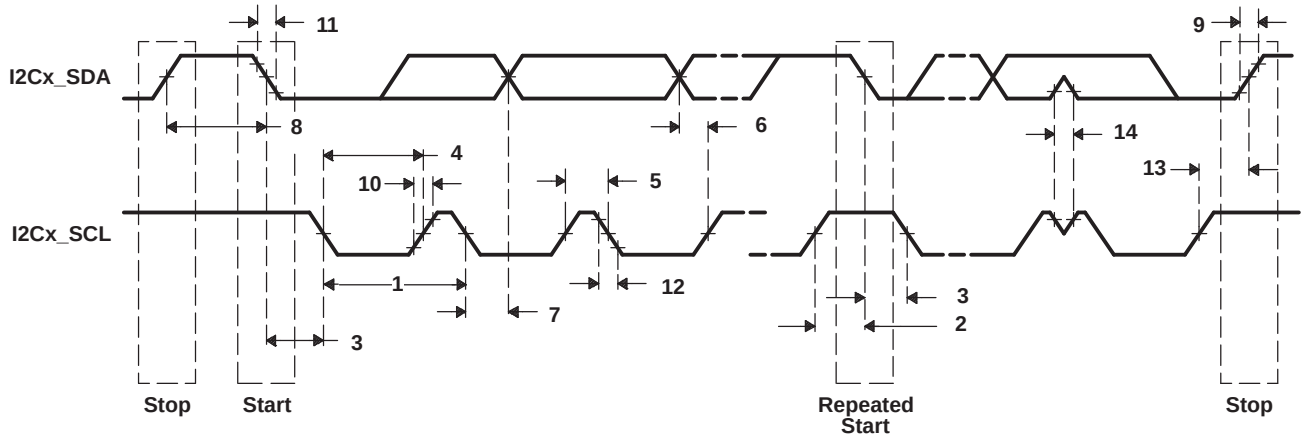

Figure 5-43. I2C Receive Timings

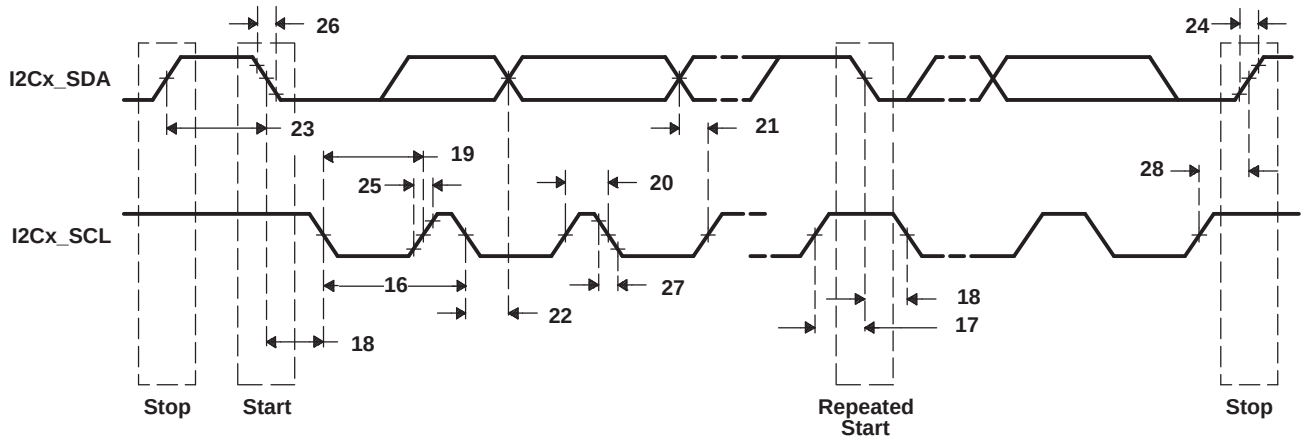

Figure 5-44. I2C Transmit Timings

5.19 Universal Asynchronous Receiver/Transmitter (UART)

Each UART has the following features:

- 16-byte storage space for both the transmitter and receiver FIFOs
- 1, 4, 8, or 14 byte selectable receiver FIFO trigger level for autoflow control and DMA
- DMA signaling capability for both received and transmitted data
- Programmable auto-rts and auto-cts for autoflow control
- Programmable Baud Rate up to 3MBaud
- Programmable Oversampling Options of x13 and x16
- Frequency pre-scale values from 1 to 65,535 to generate appropriate baud rates
- Prioritized interrupts
- Programmable serial data formats
  - 5, 6, 7, or 8-bit characters
  - Even, odd, or no parity bit generation and detection
  - 1, 1.5, or 2 stop bit generation
- False start bit detection
- Line break generation and detection
- Internal diagnostic capabilities
  - Loopback controls for communications link fault isolation
  - Break, parity, overrun, and framing error simulation
- Modem control functions (CTS, RTS)

The UART registers are listed in Section 5.19.1

5.19.1 UART Peripheral Registers Description(s)

Table 5-89 is the list of UART registers.

Table 5-89. UART Registers

UART0 BYTE ADDRESS	UART1 BYTE ADDRESS	UART2 BYTE ADDRESS	ACRONYM	REGISTER DESCRIPTION
0x01C4 2000	0x01D0 C000	0x01D0 D000	RBR	Receiver Buffer Register (read only)
0x01C4 2000	0x01D0 C000	0x01D0 D000	THR	Transmitter Holding Register (write only)
0x01C4 2004	0x01D0 C004	0x01D0 D004	IER	Interrupt Enable Register
0x01C4 2008	0x01D0 C008	0x01D0 D008	IIR	Interrupt Identification Register (read only)
0x01C4 2008	0x01D0 C008	0x01D0 D008	FCR	FIFO Control Register (write only)
0x01C4 200C	0x01D0 C00C	0x01D0 D00C	LCR	Line Control Register
0x01C4 2010	0x01D0 C010	0x01D0 D010	MCR	Modem Control Register
0x01C4 2014	0x01D0 C014	0x01D0 D014	LSR	Line Status Register
0x01C4 2018	0x01D0 C018	0x01D0 D018	MSR	Modem Status Register
0x01C4 201C	0x01D0 C01C	0x01D0 D01C	SCR	Scratchpad Register
0x01C4 2020	0x01D0 C020	0x01D0 D020	DLL	Divisor LSB Latch
0x01C4 2024	0x01D0 C024	0x01D0 D024	DLH	Divisor MSB Latch
0x01C4 2028	0x01D0 C028	0x01D0 D028	REVID1	Revision Identification Register 1
0x01C4 2030	0x01D0 C030	0x01D0 D030	PWREMU_MGMT	Power and Emulation Management Register
0x01C4 2034	0x01D0 C034	0x01D0 D034	MDR	Mode Definition Register

Copyright © 2011–2013, Texas Instruments Incorporated

5.19.2 UART Electrical Data/Timing

Table 5-90. Timing Requirements for UART Receive(1) (see Figure 5-45)

NO.	PARAMETER		1.3V, 1.2V, 1.1V, 1.0V		UNIT
			MIN	MAX	
4	$t_{w(URXDB)}$	Pulse duration, receive data bit (RXDn)	0.96U	1.05U	ns
5	$t_{w(URXSB)}$	Pulse duration, receive start bit	0.96U	1.05U	ns

(1) U = UART baud time = 1/programmed baud rate.

Table 5-91. Switching Characteristics Over Recommended Operating Conditions for UARTx Transmit(1) (see Figure 5-45)

NO.	PARAMETER		1.3V, 1.2V, 1.1V, 1.0V		UNIT
			MIN	MAX	
1	$f_{(baud)}$	Maximum programmable baud rate		D/E (2) (3)	MBaud (4)
2	$t_{w(UTXDB)}$	Pulse duration, transmit data bit (TXDn)	U - 2	U + 2	ns
3	$t_{w(UTXSB)}$	Pulse duration, transmit start bit	U - 2	U + 2	ns

(1) U = UART baud time = 1/programmed baud rate.
(2) D = UART input clock in MHz.
For UART0, the UART input clock is SYSCLK2.
For UART1 or UART2, the UART input clock is ASYNC3 (either PLL0_SYCLK2 or PLL1_SYSCLK2).
(3) E = UART divisor x UART sampling rate. The UART divisor is set through the UART divisor latch registers (DLL and DLH). The UART sampling rate is set through the over-sampling mode select bit (OSM_SEL) of the UART mode definition register (MDR).
(4) Baud rate is not indicative of data rate. Actual data rate will be limited by system factors such as EDMA loading, EMIF/DDR loading, system frequency, etc.

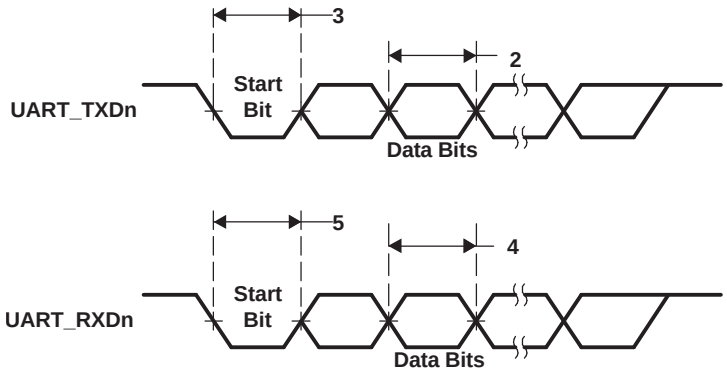

Figure 5-45. UART Transmit/Receive Timing

5.20 Universal Serial Bus OTG Controller (USB0) [USB2.0 OTG]

The USB2.0 peripheral supports the following features:

- USB 2.0 peripheral at speeds high speed (HS: 480 Mb/s) and full speed (FS: 12 Mb/s)
- USB 2.0 host at speeds HS, FS, and low speed (LS: 1.5 Mb/s)
- All transfer modes (control, bulk, interrupt, and isochronous)
- 4 Transmit (TX) and 4 Receive (RX) endpoints in addition to endpoint 0
- FIFO RAM
  - 4K endpoint
  - Programmable size
- Integrated USB 2.0 High Speed PHY
- Connects to a standard Charge Pump for VBUS 5 V generation
- RNDIS mode for accelerating RNDIS type protocols using short packet termination over USB

Important Notice: The USB0 controller module clock (PLL0_SYSCLK2) must be greater than 30 MHz for proper operation of the USB controller. A clock rate of 60 MHz or greater is recommended to avoid data throughput reduction.

Table 5-92 is the list of USB OTG registers.

Table 5-92. Universal Serial Bus OTG (USB0) Registers

BYTE ADDRESS	ACRONYM	REGISTER DESCRIPTION
0x01E0 0000	REVID	Revision Register
0x01E0 0004	CTRLR	Control Register
0x01E0 0008	STATR	Status Register
0x01E0 000C	EMUR	Emulation Register
0x01E0 0010	MODE	Mode Register
0x01E0 0014	AUTOREQ	Autorequest Register
0x01E0 0018	SRPFIXTIME	SRP Fix Time Register
0x01E0 001C	TEARDOWN	Teardown Register
0x01E0 0020	INTSRCR	USB Interrupt Source Register
0x01E0 0024	INTSETR	USB Interrupt Source Set Register
0x01E0 0028	INTCLRR	USB Interrupt Source Clear Register
0x01E0 002C	INTMSKR	USB Interrupt Mask Register
0x01E0 0030	INTMSKSETR	USB Interrupt Mask Set Register
0x01E0 0034	INTMSKCLRR	USB Interrupt Mask Clear Register
0x01E0 0038	INTMASKEDR	USB Interrupt Source Masked Register
0x01E0 003C	EOIR	USB End of Interrupt Register
0x01E0 0040	-	Reserved
0x01E0 0050	GENRNDISSZ1	Generic RNDIS Size EP1
0x01E0 0054	GENRNDISSZ2	Generic RNDIS Size EP2
0x01E0 0058	GENRNDISSZ3	Generic RNDIS Size EP3
0x01E0 005C	GENRNDISSZ4	Generic RNDIS Size EP4
0x01E0 0400	FADDR	Function Address Register
0x01E0 0401	POWER	Power Management Register
0x01E0 0402	INTRTX	Interrupt Register for Endpoint 0 plus Transmit Endpoints 1 to 4
0x01E0 0404	INTRRX	Interrupt Register for Receive Endpoints 1 to 4
0x01E0 0406	INTRTXE	Interrupt enable register for INTRTX
0x01E0 0408	INTRRXE	Interrupt Enable Register for INTRRX
0x01E0 040A	INTRUSB	Interrupt Register for Common USB Interrupts
0x01E0 040B	INTRUSBE	Interrupt Enable Register for INTRUSB

 Copyright © 2011–2013, Texas Instruments Incorporated

Table 5-92. Universal Serial Bus OTG (USB0) Registers (continued)

BYTE ADDRESS	ACRONYM	REGISTER DESCRIPTION
0x01E0 040C	FRAME	Frame Number Register
0x01E0 040E	INDEX	Index Register for Selecting the Endpoint Status and Control Registers
0x01E0 040F	TESTMODE	Register to Enable the USB 2.0 Test Modes
Indexed Registers These registers operate on the endpoint selected by the INDEX register		
0x01E0 0410	TXMAXP	Maximum Packet Size for Peripheral/Host Transmit Endpoint (Index register set to select Endpoints 1-4 only)
0x01E0 0412	PERI_CSR0	Control Status Register for Endpoint 0 in Peripheral Mode. (Index register set to select Endpoint 0)
	HOST_CSR0	Control Status Register for Endpoint 0 in Host Mode. (Index register set to select Endpoint 0)
	PERI_TXCSR	Control Status Register for Peripheral Transmit Endpoint. (Index register set to select Endpoints 1-4)
	HOST_TXCSR	Control Status Register for Host Transmit Endpoint. (Index register set to select Endpoints 1-4)
0x01E0 0414	RXMAXP	Maximum Packet Size for Peripheral/Host Receive Endpoint (Index register set to select Endpoints 1-4 only)
0x01E0 0416	PERI_RXCSR	Control Status Register for Peripheral Receive Endpoint. (Index register set to select Endpoints 1-4)
	HOST_RXCSR	Control Status Register for Host Receive Endpoint. (Index register set to select Endpoints 1-4)
0x01E0 0418	COUNT0	Number of Received Bytes in Endpoint 0 FIFO. (Index register set to select Endpoint 0)
	RXCOUNT	Number of Bytes in Host Receive Endpoint FIFO. (Index register set to select Endpoints 1- 4)
0x01E0 041A	HOST_TYPE0	Defines the speed of Endpoint 0
	HOST_TXTYPE	Sets the operating speed, transaction protocol and peripheral endpoint number for the host Transmit endpoint. (Index register set to select Endpoints 1-4 only)
0x01E0 041B	HOST_NAKLIMIT0	Sets the NAK response timeout on Endpoint 0. (Index register set to select Endpoint 0)
	HOST_TXINTERVAL	Sets the polling interval for Interrupt/ISOC transactions or the NAK response timeout on Bulk transactions for host Transmit endpoint. (Index register set to select Endpoints 1-4 only)
0x01E0 041C	HOST_RXTYPE	Sets the operating speed, transaction protocol and peripheral endpoint number for the host Receive endpoint. (Index register set to select Endpoints 1-4 only)
0x01E0 041D	HOST_RXINTERVAL	Sets the polling interval for Interrupt/ISOC transactions or the NAK response timeout on Bulk transactions for host Receive endpoint. (Index register set to select Endpoints 1-4 only)
0x01E0 041F	CONFIGDATA	Returns details of core configuration. (Index register set to select Endpoint 0)
FIFO		
0x01E0 0420	FIFO0	Transmit and Receive FIFO Register for Endpoint 0
0x01E0 0424	FIFO1	Transmit and Receive FIFO Register for Endpoint 1
0x01E0 0428	FIFO2	Transmit and Receive FIFO Register for Endpoint 2
0x01E0 042C	FIFO3	Transmit and Receive FIFO Register for Endpoint 3
0x01E0 0430	FIFO4	Transmit and Receive FIFO Register for Endpoint 4
OTG Device Control		
0x01E0 0460	DEVCTL	Device Control Register
Dynamic FIFO Control		
0x01E0 0462	TXFIFOSZ	Transmit Endpoint FIFO Size (Index register set to select Endpoints 1-4 only)
0x01E0 0463	RXFIFOSZ	Receive Endpoint FIFO Size (Index register set to select Endpoints 1-4 only)
0x01E0 0464	TXFIFOADDR	Transmit Endpoint FIFO Address (Index register set to select Endpoints 1-4 only)
0x01E0 0466	RXFIFOADDR	Receive Endpoint FIFO Address (Index register set to select Endpoints 1-4 only)

Copyright © 2011–2013, Texas Instruments Incorporated

Table 5-92. Universal Serial Bus OTG (USB0) Registers (continued)

BYTE ADDRESS	ACRONYM	REGISTER DESCRIPTION
0x01E0 046C	HWVERS	Hardware Version Register
Target Endpoint 0 Control Registers, Valid Only in Host Mode		
0x01E0 0480	TXFUNCADDR	Address of the target function that has to be accessed through the associated Transmit Endpoint.
0x01E0 0482	TXHUBADDR	Address of the hub that has to be accessed through the associated Transmit Endpoint. This is used only when full speed or low speed device is connected via a USB2.0 high-speed hub.
0x01E0 0483	TXHUBPORT	Port of the hub that has to be accessed through the associated Transmit Endpoint. This is used only when full speed or low speed device is connected via a USB2.0 high-speed hub.
0x01E0 0484	RXFUNCADDR	Address of the target function that has to be accessed through the associated Receive Endpoint.
0x01E0 0486	RXHUBADDR	Address of the hub that has to be accessed through the associated Receive Endpoint. This is used only when full speed or low speed device is connected via a USB2.0 high-speed hub.
0x01E0 0487	RXHUBPORT	Port of the hub that has to be accessed through the associated Receive Endpoint. This is used only when full speed or low speed device is connected via a USB2.0 high-speed hub.
Target Endpoint 1 Control Registers, Valid Only in Host Mode		
0x01E0 0488	TXFUNCADDR	Address of the target function that has to be accessed through the associated Transmit Endpoint.
0x01E0 048A	TXHUBADDR	Address of the hub that has to be accessed through the associated Transmit Endpoint. This is used only when full speed or low speed device is connected via a USB2.0 high-speed hub.
0x01E0 048B	TXHUBPORT	Port of the hub that has to be accessed through the associated Transmit Endpoint. This is used only when full speed or low speed device is connected via a USB2.0 high-speed hub.
0x01E0 048C	RXFUNCADDR	Address of the target function that has to be accessed through the associated Receive Endpoint.
0x01E0 048E	RXHUBADDR	Address of the hub that has to be accessed through the associated Receive Endpoint. This is used only when full speed or low speed device is connected via a USB2.0 high-speed hub.
0x01E0 048F	RXHUBPORT	Port of the hub that has to be accessed through the associated Receive Endpoint. This is used only when full speed or low speed device is connected via a USB2.0 high-speed hub.
Target Endpoint 2 Control Registers, Valid Only in Host Mode		
0x01E0 0490	TXFUNCADDR	Address of the target function that has to be accessed through the associated Transmit Endpoint.
0x01E0 0492	TXHUBADDR	Address of the hub that has to be accessed through the associated Transmit Endpoint. This is used only when full speed or low speed device is connected via a USB2.0 high-speed hub.
0x01E0 0493	TXHUBPORT	Port of the hub that has to be accessed through the associated Transmit Endpoint. This is used only when full speed or low speed device is connected via a USB2.0 high-speed hub.
0x01E0 0494	RXFUNCADDR	Address of the target function that has to be accessed through the associated Receive Endpoint.
0x01E0 0496	RXHUBADDR	Address of the hub that has to be accessed through the associated Receive Endpoint. This is used only when full speed or low speed device is connected via a USB2.0 high-speed hub.
0x01E0 0497	RXHUBPORT	Port of the hub that has to be accessed through the associated Receive Endpoint. This is used only when full speed or low speed device is connected via a USB2.0 high-speed hub.
Target Endpoint 3 Control Registers, Valid Only in Host Mode		
0x01E0 0498	TXFUNCADDR	Address of the target function that has to be accessed through the associated Transmit Endpoint.
0x01E0 049A	TXHUBADDR	Address of the hub that has to be accessed through the associated Transmit Endpoint. This is used only when full speed or low speed device is connected via a USB2.0 high-speed hub.
0x01E0 049B	TXHUBPORT	Port of the hub that has to be accessed through the associated Transmit Endpoint. This is used only when full speed or low speed device is connected via a USB2.0 high-speed hub.
0x01E0 049C	RXFUNCADDR	Address of the target function that has to be accessed through the associated Receive Endpoint.
0x01E0 049E	RXHUBADDR	Address of the hub that has to be accessed through the associated Receive Endpoint. This is used only when full speed or low speed device is connected via a USB2.0 high-speed hub.
0x01E0 049F	RXHUBPORT	Port of the hub that has to be accessed through the associated Receive Endpoint. This is used only when full speed or low speed device is connected via a USB2.0 high-speed hub.
Target Endpoint 4 Control Registers, Valid Only in Host Mode		

Copyright © 2011–2013, Texas Instruments Incorporated

Table 5-92. Universal Serial Bus OTG (USB0) Registers (continued)

BYTE ADDRESS	ACRONYM	REGISTER DESCRIPTION
0x01E0 04A0	TXFUNCADDR	Address of the target function that has to be accessed through the associated Transmit Endpoint.
0x01E0 04A2	TXHUBADDR	Address of the hub that has to be accessed through the associated Transmit Endpoint. This is used only when full speed or low speed device is connected via a USB2.0 high-speed hub.
0x01E0 04A3	TXHUBPORT	Port of the hub that has to be accessed through the associated Transmit Endpoint. This is used only when full speed or low speed device is connected via a USB2.0 high-speed hub.
0x01E0 04A4	RXFUNCADDR	Address of the target function that has to be accessed through the associated Receive Endpoint.
0x01E0 04A6	RXHUBADDR	Address of the hub that has to be accessed through the associated Receive Endpoint. This is used only when full speed or low speed device is connected via a USB2.0 high-speed hub.
0x01E0 04A7	RXHUBPORT	Port of the hub that has to be accessed through the associated Receive Endpoint. This is used only when full speed or low speed device is connected via a USB2.0 high-speed hub.
Control and Status Register for Endpoint 0		
0x01E0 0502	PERI_CSR0	Control Status Register for Endpoint 0 in Peripheral Mode
	HOST_CSR0	Control Status Register for Endpoint 0 in Host Mode
0x01E0 0508	COUNT0	Number of Received Bytes in Endpoint 0 FIFO
0x01E0 050A	HOST_TYPE0	Defines the Speed of Endpoint 0
0x01E0 050B	HOST_NAKLIMIT0	Sets the NAK Response Timeout on Endpoint 0
0x01E0 050F	CONFIGDATA	Returns details of core configuration.
Control and Status Register for Endpoint 1		
0x01E0 0510	TXMAXP	Maximum Packet Size for Peripheral/Host Transmit Endpoint
0x01E0 0512	PERI_TXCSR	Control Status Register for Peripheral Transmit Endpoint (peripheral mode)
	HOST_TXCSR	Control Status Register for Host Transmit Endpoint (host mode)
0x01E0 0514	RXMAXP	Maximum Packet Size for Peripheral/Host Receive Endpoint
0x01E0 0516	PERI_RXCSR	Control Status Register for Peripheral Receive Endpoint (peripheral mode)
	HOST_RXCSR	Control Status Register for Host Receive Endpoint (host mode)
0x01E0 0518	RXCOUNT	Number of Bytes in Host Receive endpoint FIFO
0x01E0 051A	HOST_TXTYPE	Sets the operating speed, transaction protocol and peripheral endpoint number for the host Transmit endpoint.
0x01E0 051B	HOST_TXINTERVAL	Sets the polling interval for Interrupt/ISOC transactions or the NAK response timeout on Bulk transactions for host Transmit endpoint.
0x01E0 051C	HOST_RXTYPE	Sets the operating speed, transaction protocol and peripheral endpoint number for the host Receive endpoint.
0x01E0 051D	HOST_RXINTERVAL	Sets the polling interval for Interrupt/ISOC transactions or the NAK response timeout on Bulk transactions for host Receive endpoint.
Control and Status Register for Endpoint 2		
0x01E0 0520	TXMAXP	Maximum Packet Size for Peripheral/Host Transmit Endpoint
0x01E0 0522	PERI_TXCSR	Control Status Register for Peripheral Transmit Endpoint (peripheral mode)
	HOST_TXCSR	Control Status Register for Host Transmit Endpoint (host mode)
0x01E0 0524	RXMAXP	Maximum Packet Size for Peripheral/Host Receive Endpoint
0x01E0 0526	PERI_RXCSR	Control Status Register for Peripheral Receive Endpoint (peripheral mode)
	HOST_RXCSR	Control Status Register for Host Receive Endpoint (host mode)
0x01E0 0528	RXCOUNT	Number of Bytes in Host Receive endpoint FIFO
0x01E0 052A	HOST_TXTYPE	Sets the operating speed, transaction protocol and peripheral endpoint number for the host Transmit endpoint.
0x01E0 052B	HOST_TXINTERVAL	Sets the polling interval for Interrupt/ISOC transactions or the NAK response timeout on Bulk transactions for host Transmit endpoint.
0x01E0 052C	HOST_RXTYPE	Sets the operating speed, transaction protocol and peripheral endpoint number for the host Receive endpoint.
0x01E0 052D	HOST_RXINTERVAL	Sets the polling interval for Interrupt/ISOC transactions or the NAK response timeout on Bulk transactions for host Receive endpoint.
Control and Status Register for Endpoint 3		

Copyright © 2011–2013, Texas Instruments Incorporated

Table 5-92. Universal Serial Bus OTG (USB0) Registers (continued)

BYTE ADDRESS	ACRONYM	REGISTER DESCRIPTION
0x01E0 0530	TXMAXP	Maximum Packet Size for Peripheral/Host Transmit Endpoint
0x01E0 0532	PERI_TXCSR	Control Status Register for Peripheral Transmit Endpoint (peripheral mode)
	HOST_TXCSR	Control Status Register for Host Transmit Endpoint (host mode)
0x01E0 0534	RXMAXP	Maximum Packet Size for Peripheral/Host Receive Endpoint
0x01E0 0536	PERI_RXCSR	Control Status Register for Peripheral Receive Endpoint (peripheral mode)
	HOST_RXCSR	Control Status Register for Host Receive Endpoint (host mode)
0x01E0 0538	RXCOUNT	Number of Bytes in Host Receive endpoint FIFO
0x01E0 053A	HOST_TXTYPE	Sets the operating speed, transaction protocol and peripheral endpoint number for the host Transmit endpoint.
0x01E0 053B	HOST_TXINTERVAL	Sets the polling interval for Interrupt/ISOC transactions or the NAK response timeout on Bulk transactions for host Transmit endpoint.
0x01E0 053C	HOST_RXTYPE	Sets the operating speed, transaction protocol and peripheral endpoint number for the host Receive endpoint.
0x01E0 053D	HOST_RXINTERVAL	Sets the polling interval for Interrupt/ISOC transactions or the NAK response timeout on Bulk transactions for host Receive endpoint.
Control and Status Register for Endpoint 4		
0x01E0 0540	TXMAXP	Maximum Packet Size for Peripheral/Host Transmit Endpoint
0x01E0 0542	PERI_TXCSR	Control Status Register for Peripheral Transmit Endpoint (peripheral mode)
	HOST_TXCSR	Control Status Register for Host Transmit Endpoint (host mode)
0x01E0 0544	RXMAXP	Maximum Packet Size for Peripheral/Host Receive Endpoint
0x01E0 0546	PERI_RXCSR	Control Status Register for Peripheral Receive Endpoint (peripheral mode)
	HOST_RXCSR	Control Status Register for Host Receive Endpoint (host mode)
0x01E0 0548	RXCOUNT	Number of Bytes in Host Receive endpoint FIFO
0x01E0 054A	HOST_TXTYPE	Sets the operating speed, transaction protocol and peripheral endpoint number for the host Transmit endpoint.
0x01E0 054B	HOST_TXINTERVAL	Sets the polling interval for Interrupt/ISOC transactions or the NAK response timeout on Bulk transactions for host Transmit endpoint.
0x01E0 054C	HOST_RXTYPE	Sets the operating speed, transaction protocol and peripheral endpoint number for the host Receive endpoint.
0x01E0 054D	HOST_RXINTERVAL	Sets the polling interval for Interrupt/ISOC transactions or the NAK response timeout on Bulk transactions for host Receive endpoint.
DMA Registers		
0x01E0 1000	DMAREVID	DMA Revision Register
0x01E0 1004	TDFDQ	DMA Teardown Free Descriptor Queue Control Register
0x01E0 1008	DMAEMU	DMA Emulation Control Register
0x01E0 1800	TXGCR[0]	Transmit Channel 0 Global Configuration Register
0x01E0 1808	RXGCR[0]	Receive Channel 0 Global Configuration Register
0x01E0 180C	RXHPCRA[0]	Receive Channel 0 Host Packet Configuration Register A
0x01E0 1810	RXHPCRB[0]	Receive Channel 0 Host Packet Configuration Register B
0x01E0 1820	TXGCR[1]	Transmit Channel 1 Global Configuration Register
0x01E0 1828	RXGCR[1]	Receive Channel 1 Global Configuration Register
0x01E0 182C	RXHPCRA[1]	Receive Channel 1 Host Packet Configuration Register A
0x01E0 1830	RXHPCRB[1]	Receive Channel 1 Host Packet Configuration Register B
0x01E0 1840	TXGCR[2]	Transmit Channel 2 Global Configuration Register
0x01E0 1848	RXGCR[2]	Receive Channel 2 Global Configuration Register
0x01E0 184C	RXHPCRA[2]	Receive Channel 2 Host Packet Configuration Register A
0x01E0 1850	RXHPCRB[2]	Receive Channel 2 Host Packet Configuration Register B
0x01E0 1860	TXGCR[3]	Transmit Channel 3 Global Configuration Register
0x01E0 1868	RXGCR[3]	Receive Channel 3 Global Configuration Register
0x01E0 186C	RXHPCRA[3]	Receive Channel 3 Host Packet Configuration Register A

Copyright © 2011–2013, Texas Instruments Incorporated

Table 5-92. Universal Serial Bus OTG (USB0) Registers (continued)

BYTE ADDRESS	ACRONYM	REGISTER DESCRIPTION
0x01E0 1870	RXHPCRB[3]	Receive Channel 3 Host Packet Configuration Register B
0x01E0 2000	DMA_SCHED_CTRL	DMA Scheduler Control Register
0x01E0 2800	WORD[0]	DMA Scheduler Table Word 0
0x01E0 2804	WORD[1]	DMA Scheduler Table Word 1
. . .	. . .	. . .
0x01E0 28FC	WORD[63]	DMA Scheduler Table Word 63
Queue Manager Registers		
0x01E0 4000	QMGRREVID	Queue Manager Revision Register
0x01E0 4008	DIVERSION	Queue Diversion Register
0x01E0 4020	FDBSC0	Free Descriptor/Buffer Starvation Count Register 0
0x01E0 4024	FDBSC1	Free Descriptor/Buffer Starvation Count Register 1
0x01E0 4028	FDBSC2	Free Descriptor/Buffer Starvation Count Register 2
0x01E0 402C	FDBSC3	Free Descriptor/Buffer Starvation Count Register 3
0x01E0 4080	LRAM0BASE	Linking RAM Region 0 Base Address Register
0x01E0 4084	LRAM0SIZE	Linking RAM Region 0 Size Register
0x01E0 4088	LRAM1BASE	Linking RAM Region 1 Base Address Register
0x01E0 4090	PEND0	Queue Pending Register 0
0x01E0 4094	PEND1	Queue Pending Register 1
0x01E0 5000	QMEMRBASE[0]	Memory Region 0 Base Address Register
0x01E0 5004	QMEMRCTRL[0]	Memory Region 0 Control Register
0x01E0 5010	QMEMRBASE[1]	Memory Region 1 Base Address Register
0x01E0 5014	QMEMRCTRL[1]	Memory Region 1 Control Register
. . .	. . .	. . .
0x01E0 50F0	QMEMRBASE[15]	Memory Region 15 Base Address Register
0x01E0 50F4	QMEMRCTRL[15]	Memory Region 15 Control Register
0x01E0 600C	CTRLD[0]	Queue Manager Queue 0 Control Register D
0x01E0 601C	CTRLD[1]	Queue Manager Queue 1 Control Register D
. . .	. . .	. . .
0x01E0 63FC	CTRLD[63]	Queue Manager Queue 63 Status Register D
0x01E0 6800	QSTATA[0]	Queue Manager Queue 0 Status Register A
0x01E0 6804	QSTATB[0]	Queue Manager Queue 0 Status Register B
0x01E0 6808	QSTATC[0]	Queue Manager Queue 0 Status Register C
0x01E0 6810	QSTATA[1]	Queue Manager Queue 1 Status Register A
0x01E0 6814	QSTATB[1]	Queue Manager Queue 1 Status Register B
0x01E0 6818	QSTATC[1]	Queue Manager Queue 1 Status Register C
. . .	. . .	. . .
0x01E0 6BF0	QSTATA[63]	Queue Manager Queue 63 Status Register A
0x01E0 6BF4	QSTATB[63]	Queue Manager Queue 63 Status Register B
0x01E0 6BF8	QSTATC[63]	Queue Manager Queue 63 Status Register C

5.20.1 USB0 [USB2.0] Electrical Data/Timing

The USB PHY PLL can support input clock of the following frequencies: 12.0 MHz, 13.0 MHz, 19.2 MHz, 20.0 MHz, 24.0 MHz, 26.0 MHz, 38.4 MHz, 40.0 MHz or 48.0 MHz. USB_REFCLKIN jitter tolerance is 50 ppm (maximum).

Table 5-93. Switching Characteristics Over Recommended Operating Conditions for USB0 [USB2.0] (see

Table 5-93. Switching Characteristics Over Recommended Operating Conditions for USB0 [USB2.0] (see Figure 5-46) (continued)

Figure 5-46)

NO.	PARAMETER		1.3V, 1.2V, 1.1V, 1.0V						UNIT
			LOW SPEED 1.5 Mbps		FULL SPEED 12 Mbps		HIGH SPEED 480 Mbps		
			MIN	MAX	MIN	MAX	MIN	MAX	
1	$t_{r(D)}$	Rise time, USB_DP and USB_DM signals(1)	75	300	4	20	0.5		ns
2	$t_{f(D)}$	Fall time, USB_DP and USB_DM signals(1)	75	300	4	20	0.5		ns
3	t_{rfM}	Rise/Fall time, matching(2)	80	120	90	111	–	–	%
4	V_{CRS}	Output signal cross-over voltage(1)	1.3	2	1.3	2	–	–	V
5	$t_{jr(source)NT}$	Source (Host) Driver jitter, next transition		2		2			(3)ns
	$t_{jr(FUNC)NT}$	Function Driver jitter, next transition		25		2		(3)	ns
6	$t_{jr(source)PT}$	Source (Host) Driver jitter, paired transition(4)		1		1		(3)	ns
	$t_{jr(FUNC)PT}$	Function Driver jitter, paired transition		10		1		(3)	ns
7	$t_{w(EOPT)}$	Pulse duration, EOP transmitter	1250	1500	160	175	–	–	ns
8	$t_{w(EOPR)}$	Pulse duration, EOP receiver	670		82		–		ns
9	$t_{(DRATE)}$	Data Rate		1.5		12		480	Mb/s
10	Z_{DRV}	Driver Output Resistance	–	–	40.5	49.5	40.5	49.5	Ω
11	Z_{INP}	Receiver Input Impedance	100k		100k		-	-	Ω

(1) Low Speed: C_L = 200 pF, Full Speed: C_L = 50 pF, High Speed: C_L = 50 pF
(2) $t_{RFM} = (t_r/t_f) \times 100$. [Excluding the first transaction from the Idle state.]
(3) For more detailed information, see the Universal Serial Bus Specification Revision 2.0, Chapter 7. Electrical.
(4) $t_{jr} = t_{px(1)} - t_{px(0)}$

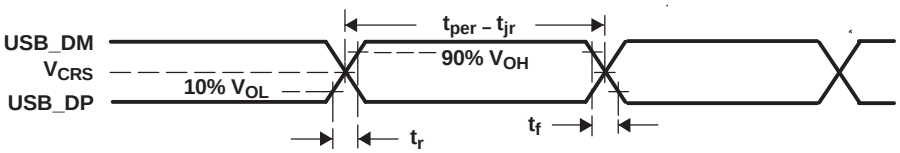

Figure 5-46. USB2.0 Integrated Transceiver Interface Timing

Copyright © 2011–2013, Texas Instruments Incorporated

5.21 Universal Serial Bus Host Controller (USB1) [USB1.1 OHCI]

All the USB interfaces for this device are compliant with Universal Serial Bus Specifications, Revision 1.1.

Table 5-94 is the list of USB Host Controller registers.

Table 5-94. USB Host Controller Registers

USB1 BYTE ADDRESS	ACRONYM	REGISTER DESCRIPTION
0x01E2 5000	HCREVISION	OHCI Revision Number Register
0x01E2 5004	HCCONTROL	HC Operating Mode Register
0x01E2 5008	HCCOMMANDSTATUS	HC Command and Status Register
0x01E2 500C	HCINTERRUPTSTATUS	HC Interrupt and Status Register
0x01E2 5010	HCINTERRUPTENABLE	HC Interrupt Enable Register
0x01E2 5014	HCINTERRUPTDISABLE	HC Interrupt Disable Register
0x01E2 5018	HCHCCA	HC HCAA Address Register(1)
0x01E2 501C	HCPERIODCURRENTED	HC Current Periodic Register(1)
0x01E2 5020	HCCONTROLHEADED	HC Head Control Register(1)
0x01E2 5024	HCCONTROLCURRENTED	HC Current Control Register(1)
0x01E2 5028	HCBULKHEADED	HC Head Bulk Register(1)
0x01E2 502C	HCBULKCURRENTED	HC Current Bulk Register(1)
0x01E2 5030	HCDONEHEAD	HC Head Done Register(1)
0x01E2 5034	HCFMINTERVAL	HC Frame Interval Register
0x01E2 5038	HCFMREMAINING	HC Frame Remaining Register
0x01E2 503C	HCFMNUMBER	HC Frame Number Register
0x01E2 5040	HCPERIODICSTART	HC Periodic Start Register
0x01E2 5044	HCLSTHRESHOLD	HC Low-Speed Threshold Register
0x01E2 5048	HCRHDESCRIPTORA	HC Root Hub A Register
0x01E2 504C	HCRHDESCRIPTORB	HC Root Hub B Register
0x01E2 5050	HCRHSTATUS	HC Root Hub Status Register
0x01E2 5054	HCRHPORTSTATUS1	HC Port 1 Status and Control Register(2)
0x01E2 5058	HCRHPORTSTATUS2	HC Port 2 Status and Control Register(3)

(1) Restrictions apply to the physical addresses used in these registers.
(2) Connected to the integrated USB1.1 phy pins (USB1_DM, USB1_DP).
(3) Although the controller implements two ports, the second port cannot be used.

Table 5-95. Switching Characteristics Over Recommended Operating Conditions for USB1 [USB1.1]

NO.	PARAMETER		1.3V, 1.2V, 1.1V, 1.0V				UNIT
			LOW SPEED		FULL SPEED		
			MIN	MAX	MAX	MAX	
U1	t_r	Rise time, USB.DP and USB.DM signals(1)	75(1)	300(1)	4(1)	20(1)	ns
U2	t_f	Fall time, USB.DP and USB.DM signals(1)	75(1)	300(1)	4(1)	20(1)	ns
U3	t_{RFM}	Rise/Fall time matching(2)	80(2)	120(2)	90(2)	110(2)	%
U4	V_{CRS}	Output signal cross-over voltage(1)	1.3(1)	2(1)	1.3(1)	2(1)	V
U5	t_j	Differential propagation jitter(3)	-25(3)	25(3)	-2(3)	2(3)	ns
U6	f_{op}	Operating frequency(4)		1.5		12	MHz

(1) Low Speed: C_L = 200 pF. High Speed: C_L = 50pF
(2) $t_{RFM} = (t_r/t_f) \times 100$
(3) $t_{jr} = t_{px(1)} - t_{px(0)}$
(4) $f_{op} = 1/t_{per}$

5.22 Ethernet Media Access Controller (EMAC)

The Ethernet Media Access Controller (EMAC) provides an efficient interface between device and the network. The EMAC supports both 10Base-T and 100Base-TX, or 10 Mbits/second (Mbps) and 100 Mbps in either half- or full-duplex mode, with hardware flow control and quality of service (QOS) support.

The EMAC controls the flow of packet data from the device to the PHY. The MDIO module controls PHY configuration and status monitoring.

Both the EMAC and the MDIO modules interface to the device through a custom interface that allows efficient data transmission and reception. This custom interface is referred to as the EMAC control module, and is considered integral to the EMAC/MDIO peripheral. The control module is also used to multiplex and control interrupts.

5.22.1 EMAC Peripheral Register Description(s)

Table 5-96. Ethernet Media Access Controller (EMAC) Registers

BYTE ADDRESS	ACRONYM	REGISTER DESCRIPTION
0x01E2 3000	TXREV	Transmit Revision Register
0x01E2 3004	TXCONTROL	Transmit Control Register
0x01E2 3008	TXTEARDOWN	Transmit Teardown Register
0x01E2 3010	RXREV	Receive Revision Register
0x01E2 3014	RXCONTROL	Receive Control Register
0x01E2 3018	RXTEARDOWN	Receive Teardown Register
0x01E2 3080	TXINTSTATRAW	Transmit Interrupt Status (Unmasked) Register
0x01E2 3084	TXINTSTATMASKED	Transmit Interrupt Status (Masked) Register
0x01E2 3088	TXINTMASKSET	Transmit Interrupt Mask Set Register
0x01E2 308C	TXINTMASKCLEAR	Transmit Interrupt Clear Register
0x01E2 3090	MACINVECTOR	MAC Input Vector Register
0x01E2 3094	MACEOIVECTOR	MAC End Of Interrupt Vector Register
0x01E2 30A0	RXINTSTATRAW	Receive Interrupt Status (Unmasked) Register
0x01E2 30A4	RXINTSTATMASKED	Receive Interrupt Status (Masked) Register
0x01E2 30A8	RXINTMASKSET	Receive Interrupt Mask Set Register
0x01E2 30AC	RXINTMASKCLEAR	Receive Interrupt Mask Clear Register
0x01E2 30B0	MACINTSTATRAW	MAC Interrupt Status (Unmasked) Register
0x01E2 30B4	MACINTSTATMASKED	MAC Interrupt Status (Masked) Register
0x01E2 30B8	MACINTMASKSET	MAC Interrupt Mask Set Register
0x01E2 30BC	MACINTMASKCLEAR	MAC Interrupt Mask Clear Register
0x01E2 3100	RXMBPENABLE	Receive Multicast/Broadcast/Promiscuous Channel Enable Register
0x01E2 3104	RXUNICASTSET	Receive Unicast Enable Set Register
0x01E2 3108	RXUNICASTCLEAR	Receive Unicast Clear Register
0x01E2 310C	RXMAXLEN	Receive Maximum Length Register
0x01E2 3110	RXBUFFEROFFSET	Receive Buffer Offset Register
0x01E2 3114	RXFILTERLOWTHRESH	Receive Filter Low Priority Frame Threshold Register
0x01E2 3120	RX0FLOWTHRESH	Receive Channel 0 Flow Control Threshold Register
0x01E2 3124	RX1FLOWTHRESH	Receive Channel 1 Flow Control Threshold Register
0x01E2 3128	RX2FLOWTHRESH	Receive Channel 2 Flow Control Threshold Register
0x01E2 312C	RX3FLOWTHRESH	Receive Channel 3 Flow Control Threshold Register
0x01E2 3130	RX4FLOWTHRESH	Receive Channel 4 Flow Control Threshold Register
0x01E2 3134	RX5FLOWTHRESH	Receive Channel 5 Flow Control Threshold Register
0x01E2 3138	RX6FLOWTHRESH	Receive Channel 6 Flow Control Threshold Register
0x01E2 313C	RX7FLOWTHRESH	Receive Channel 7 Flow Control Threshold Register

 Copyright © 2011–2013, Texas Instruments Incorporated

Table 5-96. Ethernet Media Access Controller (EMAC) Registers (continued)

BYTE ADDRESS	ACRONYM	REGISTER DESCRIPTION
0x01E2 3140	RX0FREEBUFFER	Receive Channel 0 Free Buffer Count Register
0x01E2 3144	RX1FREEBUFFER	Receive Channel 1 Free Buffer Count Register
0x01E2 3148	RX2FREEBUFFER	Receive Channel 2 Free Buffer Count Register
0x01E2 314C	RX3FREEBUFFER	Receive Channel 3 Free Buffer Count Register
0x01E2 3150	RX4FREEBUFFER	Receive Channel 4 Free Buffer Count Register
0x01E2 3154	RX5FREEBUFFER	Receive Channel 5 Free Buffer Count Register
0x01E2 3158	RX6FREEBUFFER	Receive Channel 6 Free Buffer Count Register
0x01E2 315C	RX7FREEBUFFER	Receive Channel 7 Free Buffer Count Register
0x01E2 3160	MACCONTROL	MAC Control Register
0x01E2 3164	MACSTATUS	MAC Status Register
0x01E2 3168	EMCONTROL	Emulation Control Register
0x01E2 316C	FIFOCONTROL	FIFO Control Register
0x01E2 3170	MACCONFIG	MAC Configuration Register
0x01E2 3174	SOFTRESET	Soft Reset Register
0x01E2 31D0	MACSRCADDRLO	MAC Source Address Low Bytes Register
0x01E2 31D4	MACSRCADDRHI	MAC Source Address High Bytes Register
0x01E2 31D8	MACHASH1	MAC Hash Address Register 1
0x01E2 31DC	MACHASH2	MAC Hash Address Register 2
0x01E2 31E0	BOFFTEST	Back Off Test Register
0x01E2 31E4	TPACETEST	Transmit Pacing Algorithm Test Register
0x01E2 31E8	RXPAUSE	Receive Pause Timer Register
0x01E2 31EC	TXPAUSE	Transmit Pause Timer Register
0x01E2 3200 - 0x01E2 32FC	(see Table 5-97)	EMAC Statistics Registers
0x01E2 3500	MACADDRLO	MAC Address Low Bytes Register, Used in Receive Address Matching
0x01E2 3504	MACADDRHI	MAC Address High Bytes Register, Used in Receive Address Matching
0x01E2 3508	MACINDEX	MAC Index Register
0x01E2 3600	TX0HDP	Transmit Channel 0 DMA Head Descriptor Pointer Register
0x01E2 3604	TX1HDP	Transmit Channel 1 DMA Head Descriptor Pointer Register
0x01E2 3608	TX2HDP	Transmit Channel 2 DMA Head Descriptor Pointer Register
0x01E2 360C	TX3HDP	Transmit Channel 3 DMA Head Descriptor Pointer Register
0x01E2 3610	TX4HDP	Transmit Channel 4 DMA Head Descriptor Pointer Register
0x01E2 3614	TX5HDP	Transmit Channel 5 DMA Head Descriptor Pointer Register
0x01E2 3618	TX6HDP	Transmit Channel 6 DMA Head Descriptor Pointer Register
0x01E2 361C	TX7HDP	Transmit Channel 7 DMA Head Descriptor Pointer Register
0x01E2 3620	RX0HDP	Receive Channel 0 DMA Head Descriptor Pointer Register
0x01E2 3624	RX1HDP	Receive Channel 1 DMA Head Descriptor Pointer Register
0x01E2 3628	RX2HDP	Receive Channel 2 DMA Head Descriptor Pointer Register
0x01E2 362C	RX3HDP	Receive Channel 3 DMA Head Descriptor Pointer Register
0x01E2 3630	RX4HDP	Receive Channel 4 DMA Head Descriptor Pointer Register
0x01E2 3634	RX5HDP	Receive Channel 5 DMA Head Descriptor Pointer Register
0x01E2 3638	RX6HDP	Receive Channel 6 DMA Head Descriptor Pointer Register
0x01E2 363C	RX7HDP	Receive Channel 7 DMA Head Descriptor Pointer Register
0x01E2 3640	TX0CP	Transmit Channel 0 Completion Pointer Register
0x01E2 3644	TX1CP	Transmit Channel 1 Completion Pointer Register
0x01E2 3648	TX2CP	Transmit Channel 2 Completion Pointer Register
0x01E2 364C	TX3CP	Transmit Channel 3 Completion Pointer Register
0x01E2 3650	TX4CP	Transmit Channel 4 Completion Pointer Register

Copyright © 2011–2013, Texas Instruments Incorporated

Table 5-96. Ethernet Media Access Controller (EMAC) Registers (continued)

BYTE ADDRESS	ACRONYM	REGISTER DESCRIPTION
0x01E2 3654	TX5CP	Transmit Channel 5 Completion Pointer Register
0x01E2 3658	TX6CP	Transmit Channel 6 Completion Pointer Register
0x01E2 365C	TX7CP	Transmit Channel 7 Completion Pointer Register
0x01E2 3660	RX0CP	Receive Channel 0 Completion Pointer Register
0x01E2 3664	RX1CP	Receive Channel 1 Completion Pointer Register
0x01E2 3668	RX2CP	Receive Channel 2 Completion Pointer Register
0x01E2 366C	RX3CP	Receive Channel 3 Completion Pointer Register
0x01E2 3670	RX4CP	Receive Channel 4 Completion Pointer Register
0x01E2 3674	RX5CP	Receive Channel 5 Completion Pointer Register
0x01E2 3678	RX6CP	Receive Channel 6 Completion Pointer Register
0x01E2 367C	RX7CP	Receive Channel 7 Completion Pointer Register

Table 5-97. EMAC Statistics Registers

BYTE ADDRESS	ACRONYM	REGISTER DESCRIPTION
0x01E2 3200	RXGOODFRAMES	Good Receive Frames Register
0x01E2 3204	RXBCASTFRAMES	Broadcast Receive Frames Register (Total number of good broadcast frames received)
0x01E2 3208	RXMCASTFRAMES	Multicast Receive Frames Register (Total number of good multicast frames received)
0x01E2 320C	RXPAUSEFRAMES	Pause Receive Frames Register
0x01E2 3210	RXCRCERRORS	Receive CRC Errors Register (Total number of frames received with CRC errors)
0x01E2 3214	RXALIGNCODEERRORS	Receive Alignment/Code Errors Register (Total number of frames received with alignment/code errors)
0x01E2 3218	RXOVERSIZED	Receive Oversized Frames Register (Total number of oversized frames received)
0x01E2 321C	RXJABBER	Receive Jabber Frames Register (Total number of jabber frames received)
0x01E2 3220	RXUNDERSIZED	Receive Undersized Frames Register (Total number of undersized frames received)
0x01E2 3224	RXFRAGMENTS	Receive Frame Fragments Register
0x01E2 3228	RXFILTERED	Filtered Receive Frames Register
0x01E2 322C	RXQOSFILTERED	Received QOS Filtered Frames Register
0x01E2 3230	RXOCTETS	Receive Octet Frames Register (Total number of received bytes in good frames)
0x01E2 3234	TXGOODFRAMES	Good Transmit Frames Register (Total number of good frames transmitted)
0x01E2 3238	TXBCASTFRAMES	Broadcast Transmit Frames Register
0x01E2 323C	TXMCASTFRAMES	Multicast Transmit Frames Register
0x01E2 3240	TXPAUSEFRAMES	Pause Transmit Frames Register
0x01E2 3244	TXDEFERRED	Deferred Transmit Frames Register
0x01E2 3248	TXCOLLISION	Transmit Collision Frames Register
0x01E2 324C	TXSINGLECOLL	Transmit Single Collision Frames Register
0x01E2 3250	TXMULTICOLL	Transmit Multiple Collision Frames Register
0x01E2 3254	TXEXCESSIVECOLL	Transmit Excessive Collision Frames Register
0x01E2 3258	TXLATECOLL	Transmit Late Collision Frames Register
0x01E2 325C	TXUNDERRUN	Transmit Underrun Error Register
0x01E2 3260	TXCARRIERSENSE	Transmit Carrier Sense Errors Register
0x01E2 3264	TXOCTETS	Transmit Octet Frames Register
0x01E2 3268	FRAME64	Transmit and Receive 64 Octet Frames Register

Copyright © 2011–2013, Texas Instruments Incorporated

Table 5-97. EMAC Statistics Registers (continued)

BYTE ADDRESS	ACRONYM	REGISTER DESCRIPTION
0x01E2 326C	FRAME65T127	Transmit and Receive 65 to 127 Octet Frames Register
0x01E2 3270	FRAME128T255	Transmit and Receive 128 to 255 Octet Frames Register
0x01E2 3274	FRAME256T511	Transmit and Receive 256 to 511 Octet Frames Register
0x01E2 3278	FRAME512T1023	Transmit and Receive 512 to 1023 Octet Frames Register
0x01E2 327C	FRAME1024TUP	Transmit and Receive 1024 to 1518 Octet Frames Register
0x01E2 3280	NETOCTETS	Network Octet Frames Register
0x01E2 3284	RXSOFOVERRUNS	Receive FIFO or DMA Start of Frame Overruns Register
0x01E2 3288	RXMOFOVERRUNS	Receive FIFO or DMA Middle of Frame Overruns Register
0x01E2 328C	RXDMAOVERRUNS	Receive DMA Start of Frame and Middle of Frame Overruns Register

Table 5-98. EMAC Control Module Registers

BYTE ADDRESS	ACRONYM	REGISTER DESCRIPTION
0x01E2 2000	REV	EMAC Control Module Revision Register
0x01E2 2004	SOFTRESET	EMAC Control Module Software Reset Register
0x01E2 200C	INTCONTROL	EMAC Control Module Interrupt Control Register
0x01E2 2010	C0RXTHRESHEN	EMAC Control Module Interrupt Core 0 Receive Threshold Interrupt Enable Register
0x01E2 2014	C0RXEN	EMAC Control Module Interrupt Core 0 Receive Interrupt Enable Register
0x01E2 2018	C0TXEN	EMAC Control Module Interrupt Core 0 Transmit Interrupt Enable Register
0x01E2 201C	C0MISCEN	EMAC Control Module Interrupt Core 0 Miscellaneous Interrupt Enable Register
0x01E2 2020	C1RXTHRESHEN	EMAC Control Module Interrupt Core 1 Receive Threshold Interrupt Enable Register
0x01E2 2024	C1RXEN	EMAC Control Module Interrupt Core 1 Receive Interrupt Enable Register
0x01E2 2028	C1TXEN	EMAC Control Module Interrupt Core 1 Transmit Interrupt Enable Register
0x01E2 202C	C1MISCEN	EMAC Control Module Interrupt Core 1 Miscellaneous Interrupt Enable Register
0x01E2 2030	C2RXTHRESHEN	EMAC Control Module Interrupt Core 2 Receive Threshold Interrupt Enable Register
0x01E2 2034	C2RXEN	EMAC Control Module Interrupt Core 2 Receive Interrupt Enable Register
0x01E2 2038	C2TXEN	EMAC Control Module Interrupt Core 2 Transmit Interrupt Enable Register
0x01E2 203C	C2MISCEN	EMAC Control Module Interrupt Core 2 Miscellaneous Interrupt Enable Register
0x01E2 2040	C0RXTHRESHSTAT	EMAC Control Module Interrupt Core 0 Receive Threshold Interrupt Status Register
0x01E2 2044	C0RXSTAT	EMAC Control Module Interrupt Core 0 Receive Interrupt Status Register
0x01E2 2048	C0TXSTAT	EMAC Control Module Interrupt Core 0 Transmit Interrupt Status Register
0x01E2 204C	C0MISCSTAT	EMAC Control Module Interrupt Core 0 Miscellaneous Interrupt Status Register
0x01E2 2050	C1RXTHRESHSTAT	EMAC Control Module Interrupt Core 1 Receive Threshold Interrupt Status Register
0x01E2 2054	C1RXSTAT	EMAC Control Module Interrupt Core 1 Receive Interrupt Status Register
0x01E2 2058	C1TXSTAT	EMAC Control Module Interrupt Core 1 Transmit Interrupt Status Register
0x01E2 205C	C1MISCSTAT	EMAC Control Module Interrupt Core 1 Miscellaneous Interrupt Status Register
0x01E2 2060	C2RXTHRESHSTAT	EMAC Control Module Interrupt Core 2 Receive Threshold Interrupt Status Register
0x01E2 2064	C2RXSTAT	EMAC Control Module Interrupt Core 2 Receive Interrupt Status Register
0x01E2 2068	C2TXSTAT	EMAC Control Module Interrupt Core 2 Transmit Interrupt Status Register
0x01E2 206C	C2MISCSTAT	EMAC Control Module Interrupt Core 2 Miscellaneous Interrupt Status Register
0x01E2 2070	C0RXIMAX	EMAC Control Module Interrupt Core 0 Receive Interrupts Per Millisecond Register
0x01E2 2074	C0TXIMAX	EMAC Control Module Interrupt Core 0 Transmit Interrupts Per Millisecond Register
0x01E2 2078	C1RXIMAX	EMAC Control Module Interrupt Core 1 Receive Interrupts Per Millisecond Register
0x01E2 207C	C1TXIMAX	EMAC Control Module Interrupt Core 1 Transmit Interrupts Per Millisecond Register
0x01E2 2080	C2RXIMAX	EMAC Control Module Interrupt Core 2 Receive Interrupts Per Millisecond Register
0x01E2 2084	C2TXIMAX	EMAC Control Module Interrupt Core 2 Transmit Interrupts Per Millisecond Register

Copyright © 2011–2013, Texas Instruments Incorporated

Table 5-99. EMAC Control Module RAM

BYTE ADDRESS	DESCRIPTION
0x01E2 0000 - 0x01E2 1FFF	EMAC Local Buffer Descriptor Memory

Copyright © 2011–2013, Texas Instruments Incorporated

5.22.1.1 EMAC Electrical Data/Timing

Table 5-100. Timing Requirements for MII_RXCLK (see Figure 5-47)

NO.			1.3V, 1.2V, 1.1V				1.0V		UNIT
			10 Mbps		100 Mbps		10 Mbps		
			MIN	MAX	MIN	MAX	MIN	MAX	
1	$t_{c(MII_RXCLK)}$	Cycle time, MII_RXCLK	400		40		400		ns
2	$t_{w(MII_RXCLKH)}$	Pulse duration, MII_RXCLK high	140		14		140		ns
3	$t_{w(MII_RXCLKL)}$	Pulse duration, MII_RXCLK low	140		14		140		ns

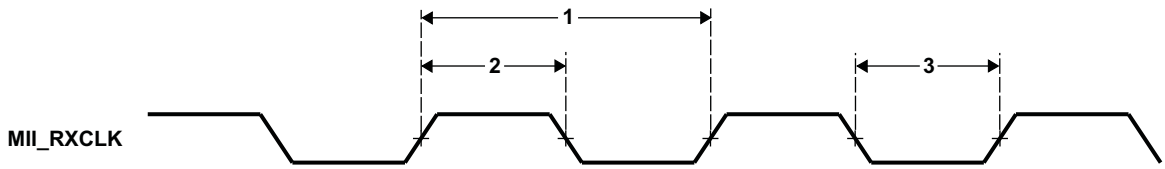

Figure 5-47. MII_RXCLK Timing (EMAC - Receive)

Table 5-101. Timing Requirements for MII_TXCLK (see Figure 5-48)

NO.	PARAMETER		1.3V, 1.2V, 1.1V				1.0V		UNIT
			10 Mbps		100 Mbps		10 Mbps		
			MIN	MAX	MIN	MAX	MIN	MAX	
1	$t_{c(MII_TXCLK)}$	Cycle time, MII_TXCLK	400		40		400		ns
2	$t_{w(MII_TXCLKH)}$	Pulse duration, MII_TXCLK high	140		14		140		ns
3	$t_{w(MII_TXCLKL)}$	Pulse duration, MII_TXCLK low	140		14		140		ns

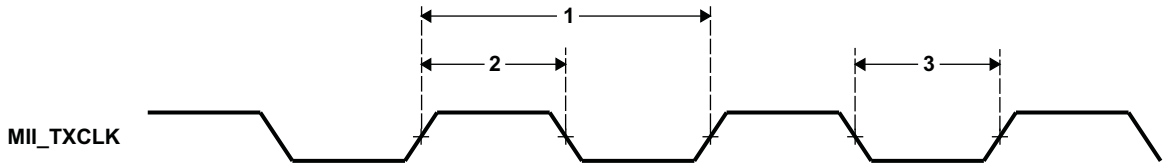

Figure 5-48. MII_TXCLK Timing (EMAC - Transmit)

Table 5-102. Timing Requirements for EMAC MII Receive 10/100 Mbit/s(1) (see Figure 5-49)

NO.	PARAMETER		1.3V, 1.2V, 1.1V, 1.0V		UNIT
			MIN	MAX	
1	$t_{su(MRXD\text{-}MII_RXCLKH)}$	Setup time, receive selected signals valid before MII_RXCLK high	8		ns
2	$t_{h(MII_RXCLKH\text{-}MRXD)}$	Hold time, receive selected signals valid after MII_RXCLK high	8		ns

(1) Receive selected signals include: MII_RXD[3]-MII_RXD[0], MII_RXDV, and MII_RXER.

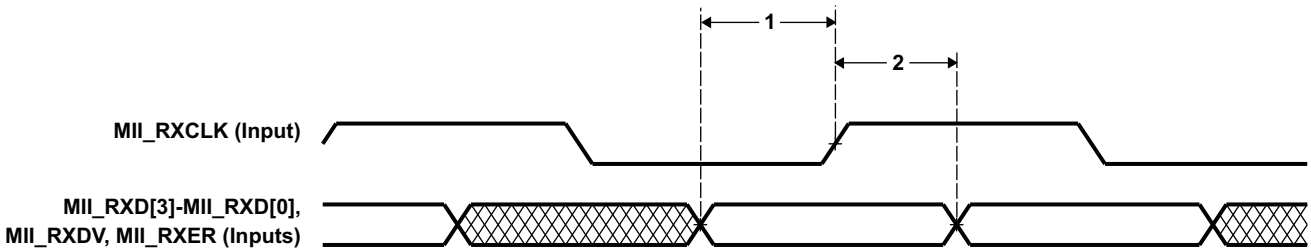

Figure 5-49. EMAC Receive Interface Timing

Table 5-103. Switching Characteristics Over Recommended Operating Conditions for EMAC MII Transmit 10/100 Mbit/s(1) (see Figure 5-50)

NO.	PARAMETER		1.3V, 1.2V, 1.1V		1.0V		UNIT
			MIN	MAX	MIN	MAX	
1	$t_{d(MII_TXCLKH\text{-}MTXD)}$	Delay time, MII_TXCLK high to transmit selected signals valid	2	25	2	32	ns

(1) Transmit selected signals include: MTXD3-MTXD0, and MII_TXEN.

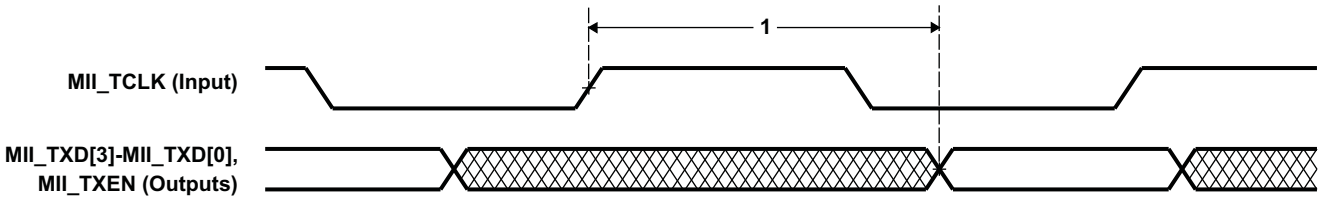

Figure 5-50. EMAC Transmit Interface Timing

Copyright © 2011–2013, Texas Instruments Incorporated

Table 5-104. Timing Requirements for EMAC RMII

NO.	PARAMETER		1.3V, 1.2V, 1.1V(1)			UNIT
			MIN	TYP	MAX	
1	tc(REFCLK)	Cycle Time, RMII_MHZ_50_CLK		20		ns
2	tw(REFCLKH)	Pulse Width, RMII_MHZ_50_CLK High	7		13	ns
3	tw(REFCLKL)	Pulse Width, RMII_MHZ_50_CLK Low	7		13	ns
6	tsu(RXD-REFCLK)	Input Setup Time, RXD Valid before RMII_MHZ_50_CLK High	4			ns
7	th(REFCLK-RXD)	Input Hold Time, RXD Valid after RMII_MHZ_50_CLK High	2			ns
8	tsu(CRSDV-REFCLK)	Input Setup Time, CRSDV Valid before RMII_MHZ_50_CLK High	4			ns
9	th(REFCLK-CRSDV)	Input Hold Time, CRSDV Valid after RMII_MHZ_50_CLK High	2			ns
10	tsu(RXER-REFCLK)	Input Setup Time, RXER Valid before RMII_MHZ_50_CLK High	4			ns
11	th(REFCLKR-RXER)	Input Hold Time, RXER Valid after RMII_MHZ_50_CLK High	2			ns

(1) RMII is not supported at operating points below 1.1V nominal

Note: Per the RMII industry specification, the RMII reference clock (RMII_MHZ_50_CLK) must have jitter tolerance of 50 ppm or less.

Table 5-105. Switching Characteristics Over Recommended Operating Conditions for EMAC RMII

NO.	PARAMETER		1.3V, 1.2V, 1.1V(1)			UNIT
			MIN	TYP	MAX	
4	td(REFCLK-TXD)	Output Delay Time, RMII_MHZ_50_CLK High to TXD Valid	2.5		13	ns
5	td(REFCLK-TXEN)	Output Delay Time, RMII_MHZ_50_CLK High to TXEN Valid	2.5		13	ns

(1) RMII is not supported at operating points below 1.1V nominal.

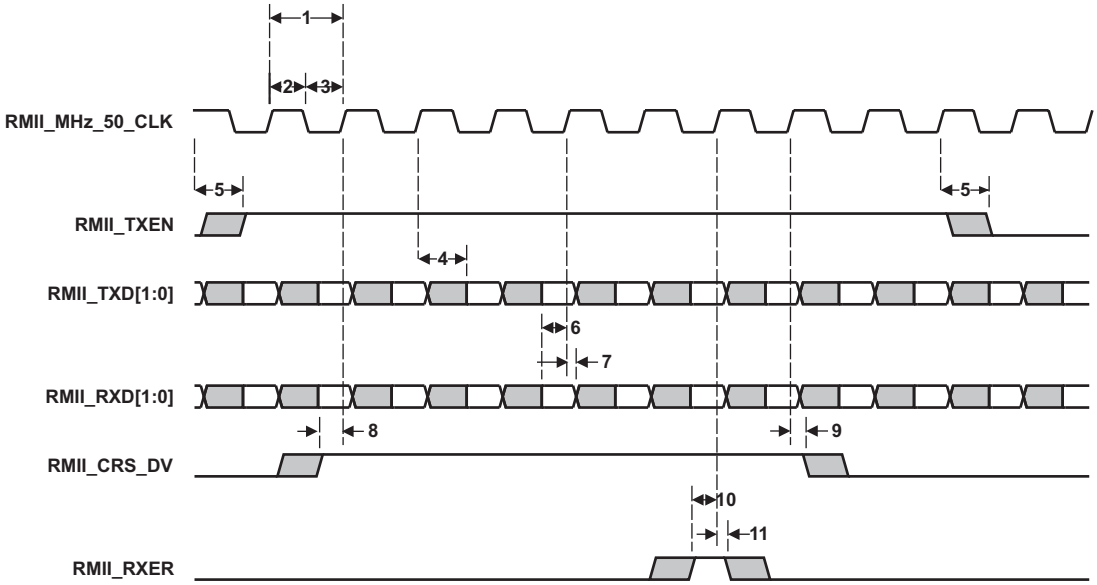

Figure 5-51. RMII Timing Diagram

5.23 Management Data Input/Output (MDIO)

The Management Data Input/Output (MDIO) module continuously polls all 32 MDIO addresses in order to enumerate all PHY devices in the system.

The Management Data Input/Output (MDIO) module implements the 802.3 serial management interface to interrogate and control Ethernet PHY(s) using a shared two-wire bus. Host software uses the MDIO module to configure the auto-negotiation parameters of each PHY attached to the EMAC, retrieve the negotiation results, and configure required parameters in the EMAC module for correct operation. The module is designed to allow almost transparent operation of the MDIO interface, with very little maintenance from the core processor. Only one PHY may be connected at any given time.

5.23.1 MDIO Register Description(s)

Table 5-106. MDIO Register Memory Map

BYTE ADDRESS	ACRONYM	REGISTER NAME
0x01E2 4000	REV	Revision Identification Register
0x01E2 4004	CONTROL	MDIO Control Register
0x01E2 4008	ALIVE	MDIO PHY Alive Status Register
0x01E2 400C	LINK	MDIO PHY Link Status Register
0x01E2 4010	LINKINTRAW	MDIO Link Status Change Interrupt (Unmasked) Register
0x01E2 4014	LINKINTMASKED	MDIO Link Status Change Interrupt (Masked) Register
0x01E2 4018	–	Reserved
0x01E2 4020	USERINTRAW	MDIO User Command Complete Interrupt (Unmasked) Register
0x01E2 4024	USERINTMASKED	MDIO User Command Complete Interrupt (Masked) Register
0x01E2 4028	USERINTMASKSET	MDIO User Command Complete Interrupt Mask Set Register
0x01E2 402C	USERINTMASKCLEAR	MDIO User Command Complete Interrupt Mask Clear Register
0x01E2 4030 - 0x01E2 407C	–	Reserved
0x01E2 4080	USERACCESS0	MDIO User Access Register 0
0x01E2 4084	USERPHYSEL0	MDIO User PHY Select Register 0
0x01E2 4088	USERACCESS1	MDIO User Access Register 1
0x01E2 408C	USERPHYSEL1	MDIO User PHY Select Register 1
0x01E2 4090 - 0x01E2 47FF	–	Reserved

Copyright © 2011–2013, Texas Instruments Incorporated

5.23.2 Management Data Input/Output (MDIO) Electrical Data/Timing

Table 5-107. Timing Requirements for MDIO Input (see Figure 5-52 and Figure 5-53)

NO.	PARAMETER		1.3V, 1.2V, 1.1V		1.0V		UNIT
			MIN	MAX	MIN	MAX	
1	$t_{c(MDCLK)}$	Cycle time, MDCLK	400		400		ns
2	$t_{w(MDCLK)}$	Pulse duration, MDCLK high/low	180		180		ns
3	$t_{t(MDCLK)}$	Transition time, MDCLK		5		5	ns
4	$t_{su(MDIO-MDCLKH)}$	Setup time, MDIO data input valid before MDCLK high	16		21		ns
5	$t_{h(MDCLKH-MDIO)}$	Hold time, MDIO data input valid after MDCLK high	0		0		ns

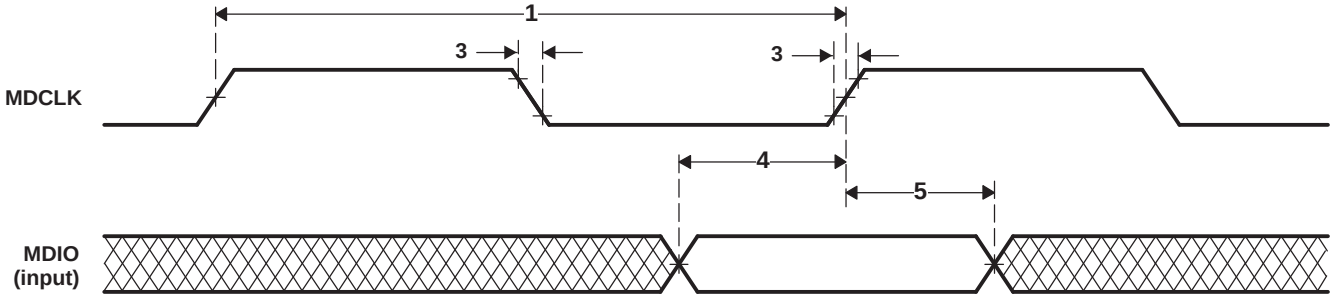

Figure 5-52. MDIO Input Timing

Table 5-108. Switching Characteristics Over Recommended Operating Conditions for MDIO Output (see Figure 5-53)

NO.	PARAMETER		1.3V, 1.2V, 1.1V, 1.0V		UNIT
			MIN	MAX	
7	$t_{d(MDCLKL-MDIO)}$	Delay time, MDCLK low to MDIO data output valid	0	100	ns

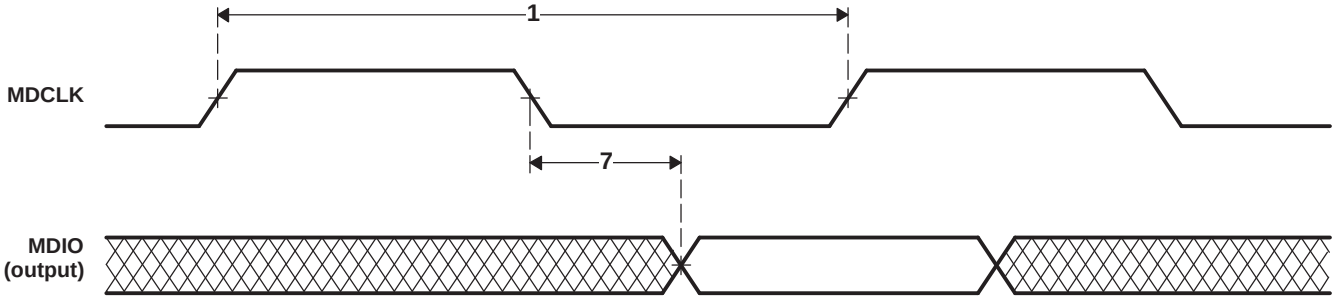

Figure 5-53. MDIO Output Timing

5.24 LCD Controller (LCDC)

The LCD controller consists of two independent controllers, the Raster Controller and the LCD Interface Display Driver (LIDD) controller. Each controller operates independently from the other and only one of them is active at any given time.

- The Raster Controller handles the synchronous LCD interface. It provides timing and data for constant graphics refresh to a passive display. It supports a wide variety of monochrome and full-color display types and sizes by use of programmable timing controls, a built-in palette, and a gray-scale/serializer. Graphics data is processed and stored in frame buffers. A frame buffer is a contiguous memory block in the system. A built-in DMA engine supplies the graphics data to the Raster engine which, in turn, outputs to the external LCD device.
- The LIDD Controller supports the asynchronous LCD interface. It provides full-timing programmability of control signals (CS, WE, OE, ALE) and output data.

The maximum resolution for the LCD controller is 1024 x 1024 pixels. The maximum frame rate is determined by the image size in combination with the pixel clock rate. For details, see SPRAB93.

Table 5-109 lists the LCD Controller registers.

Table 5-109. LCD Controller Registers

BYTE ADDRESS	ACRONYM	REGISTER DESCRIPTION
0x01E1 3000	REVID	LCD Revision Identification Register
0x01E1 3004	LCD_CTRL	LCD Control Register
0x01E1 3008	LCD_STAT	LCD Status Register
0x01E1 300C	LIDD_CTRL	LCD LIDD Control Register
0x01E1 3010	LIDD_CS0_CONF	LCD LIDD CS0 Configuration Register
0x01E1 3014	LIDD_CS0_ADDR	LCD LIDD CS0 Address Read/Write Register
0x01E1 3018	LIDD_CS0_DATA	LCD LIDD CS0 Data Read/Write Register
0x01E1 301C	LIDD_CS1_CONF	LCD LIDD CS1 Configuration Register
0x01E1 3020	LIDD_CS1_ADDR	LCD LIDD CS1 Address Read/Write Register
0x01E1 3024	LIDD_CS1_DATA	LCD LIDD CS1 Data Read/Write Register
0x01E1 3028	RASTER_CTRL	LCD Raster Control Register
0x01E1 302C	RASTER_TIMING_0	LCD Raster Timing 0 Register
0x01E1 3030	RASTER_TIMING_1	LCD Raster Timing 1 Register
0x01E1 3034	RASTER_TIMING_2	LCD Raster Timing 2 Register
0x01E1 3038	RASTER_SUBPANEL	LCD Raster Subpanel Display Register
0x01E1 3040	LCDDMA_CTRL	LCD DMA Control Register
0x01E1 3044	LCDDMA_FB0_BASE	LCD DMA Frame Buffer 0 Base Address Register
0x01E1 3048	LCDDMA_FB0_CEILING	LCD DMA Frame Buffer 0 Ceiling Address Register
0x01E1 304C	LCDDMA_FB1_BASE	LCD DMA Frame Buffer 1 Base Address Register
0x01E1 3050	LCDDMA_FB1_CEILING	LCD DMA Frame Buffer 1 Ceiling Address Register

Copyright © 2011–2013, Texas Instruments Incorporated

5.24.1 LCD Interface Display Driver (LIDD Mode)

Table 5-110. Timing Requirements for LCD LIDD Mode

NO.	PARAMETER		1.3V, 1.2V, 1.1V		1.0V		UNIT
			MIN	MAX	MIN	MAX	
16	$t_{su(LCD_D)}$	Setup time, LCD_D[15:0] valid before LCD_CLK (SYSCLK2) high	7		8		ns
17	$t_{h(LCD_D)}$	Hold time, LCD_D[15:0] valid after LCD_CLK (SYSCLK2) high	0		0		ns

Table 5-111. Switching Characteristics Over Recommended Operating Conditions for LCD LIDD Mode

NO.	PARAMETER		1.3V, 1.2V, 1.1V		1.0V		UNIT
			MIN	MAX	MIN	MAX	
4	$t_{d(LCD_D_V)}$	Delay time, LCD_CLK (SYSCLK2) high to LCD_D[15:0] valid (write)	0	7	0	9	ns
5	$t_{d(LCD_D_I)}$	Delay time, LCD_CLK (SYSCLK2) high to LCD_D[15:0] invalid (write)	0	7	0	9	ns
6	$t_{d(LCD_E_A)}$	Delay time, LCD_CLK (SYSCLK2) high to $\overline{\text{LCD_AC_ENB_CS}}$ low	0	7	0	9	ns
7	$t_{d(LCD_E_I)}$	Delay time, LCD_CLK (SYSCLK2) high to $\overline{\text{LCD_AC_ENB_CS}}$ high	0	7	0	9	ns
8	$t_{d(LCD_A_A)}$	Delay time, LCD_CLK (SYSCLK2) high to LCD_VSYNC low	0	7	0	9	ns
9	$t_{d(LCD_A_I)}$	Delay time, LCD_CLK (SYSCLK2) high to LCD_VSYNC high	0	7	0	9	ns
10	$t_{d(LCD_W_A)}$	Delay time, LCD_CLK (SYSCLK2) high to LCD_HSYNC low	0	7	0	9	ns
11	$t_{d(LCD_W_I)}$	Delay time, LCD_CLK (SYSCLK2) high to LCD_HSYNC high	0	7	0	9	ns
12	$t_{d(LCD_STRB_A)}$	Delay time, LCD_CLK (SYSCLK2) high to LCD_PCLK high	0	7	0	9	ns
13	$t_{d(LCD_STRB_I)}$	Delay time, LCD_CLK (SYSCLK2) high to LCD_PCLK low	0	7	0	9	ns
14	$t_{d(LCD_D_Z)}$	Delay time, LCD_CLK (SYSCLK2) high to LCD_D[15:0] in 3-state	0	7	0	9	ns
15	$t_{d(Z_LCD_D)}$	Delay time, LCD_CLK (SYSCLK2) high to LCD_D[15:0] (valid from 3-state)	0	7	0	9	ns

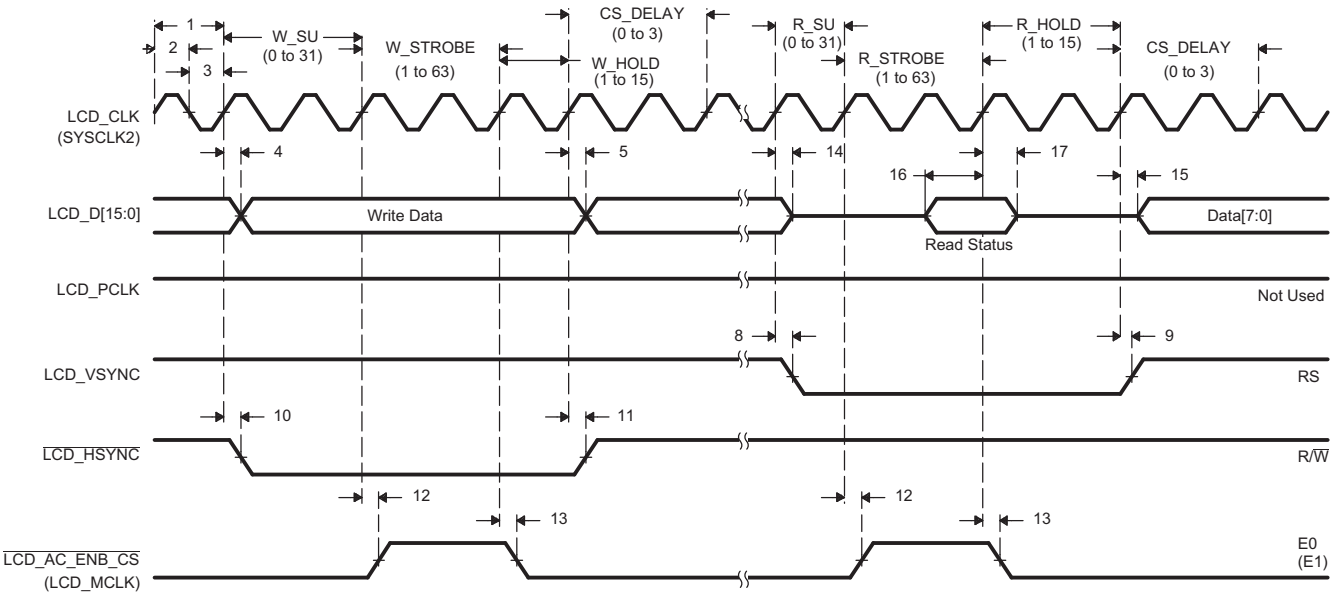

Figure 5-54. Character Display HD44780 Write

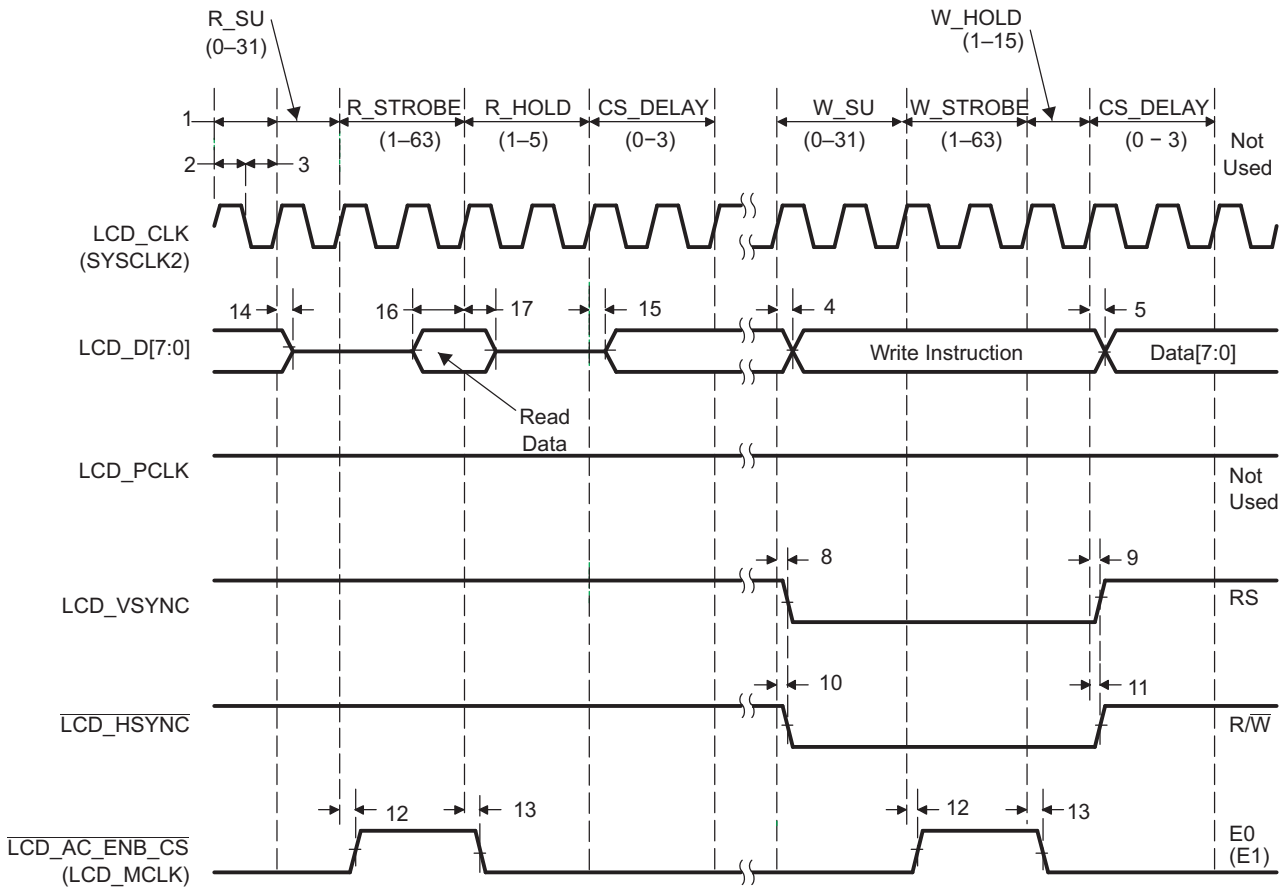

Figure 5-55. Character Display HD44780 Read

Copyright © 2011–2013, Texas Instruments Incorporated

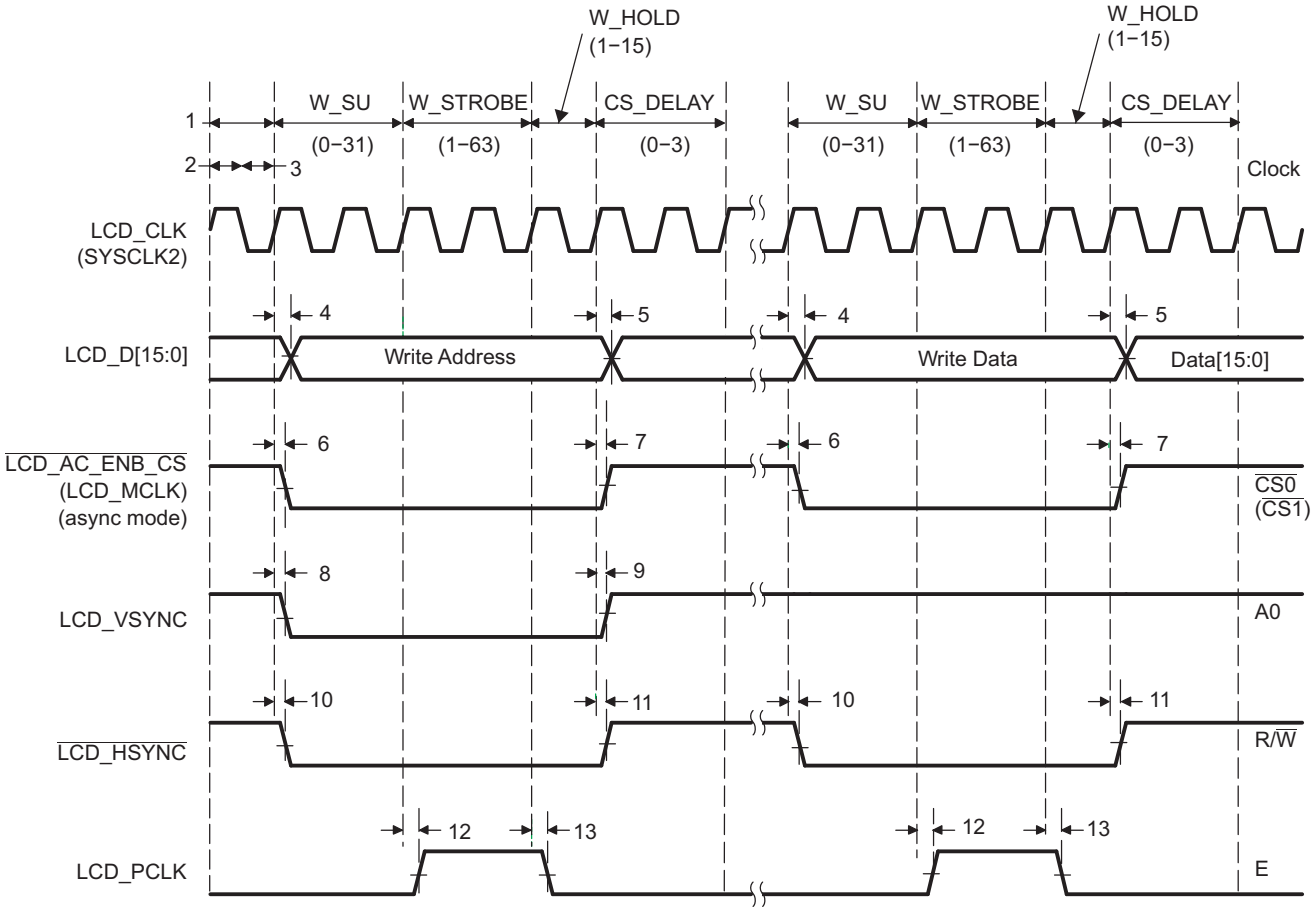

Figure 5-56. Micro-Interface Graphic Display 6800 Write

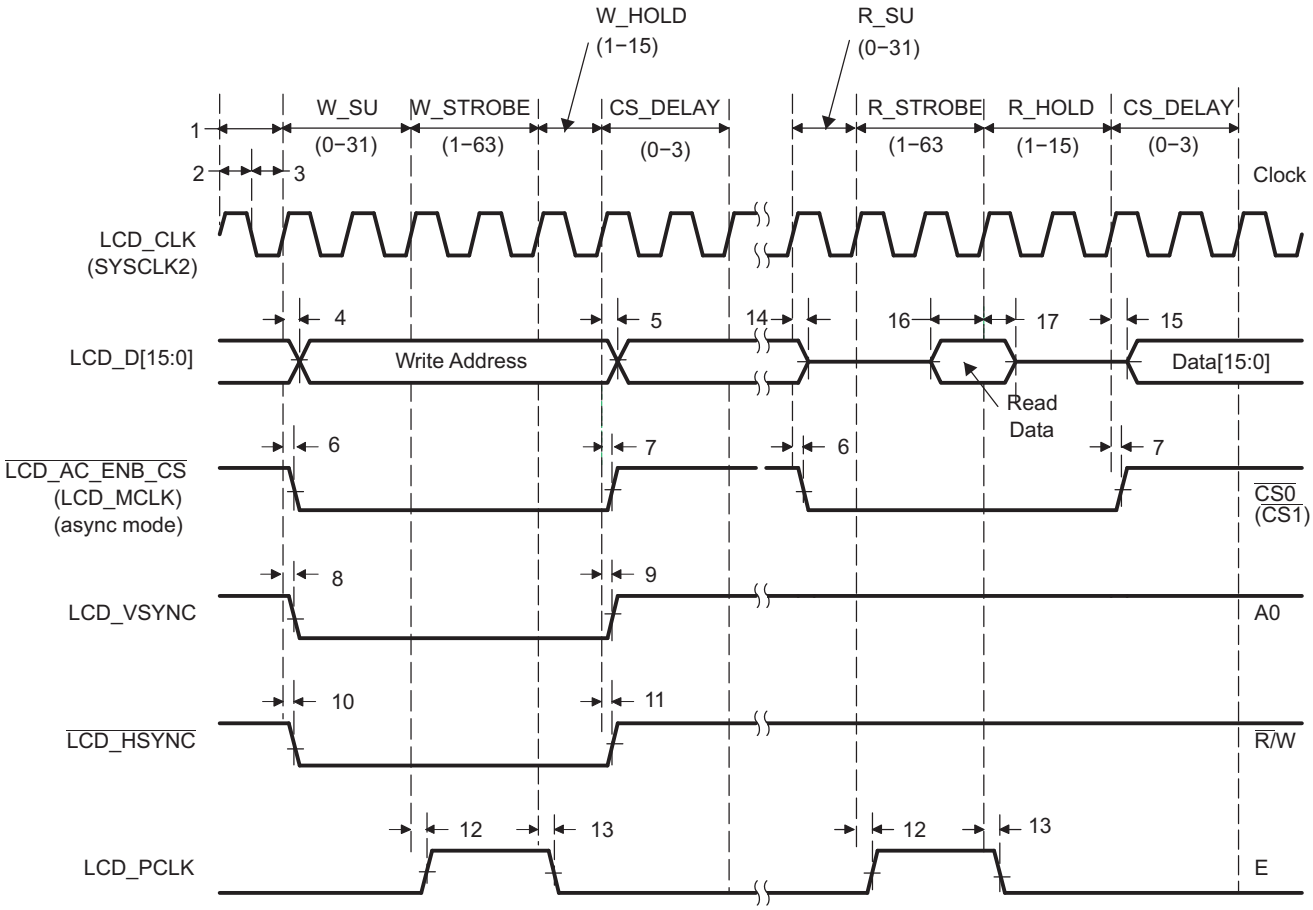

Figure 5-57. Micro-Interface Graphic Display 6800 Read

Copyright © 2011–2013, Texas Instruments Incorporated

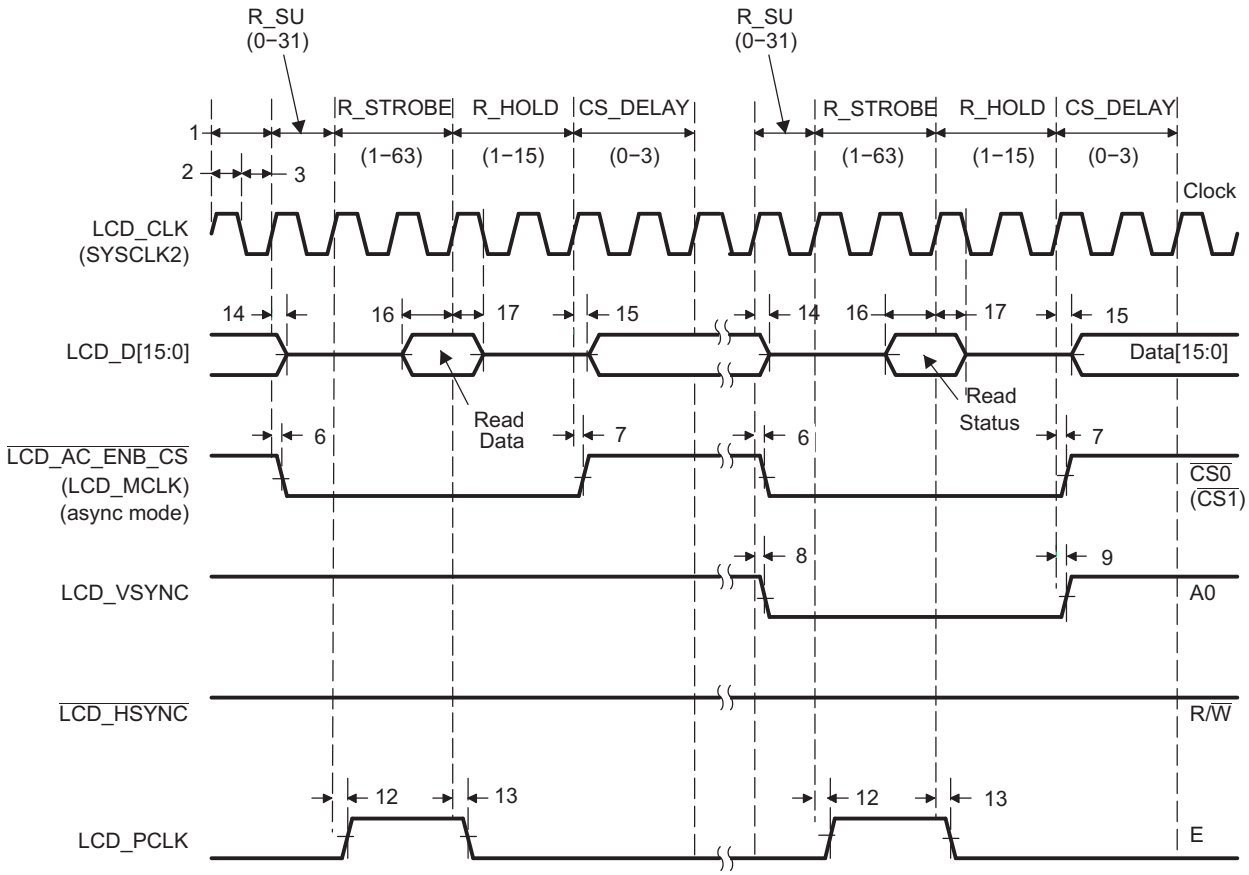

Figure 5-58. Micro-Interface Graphic Display 6800 Status

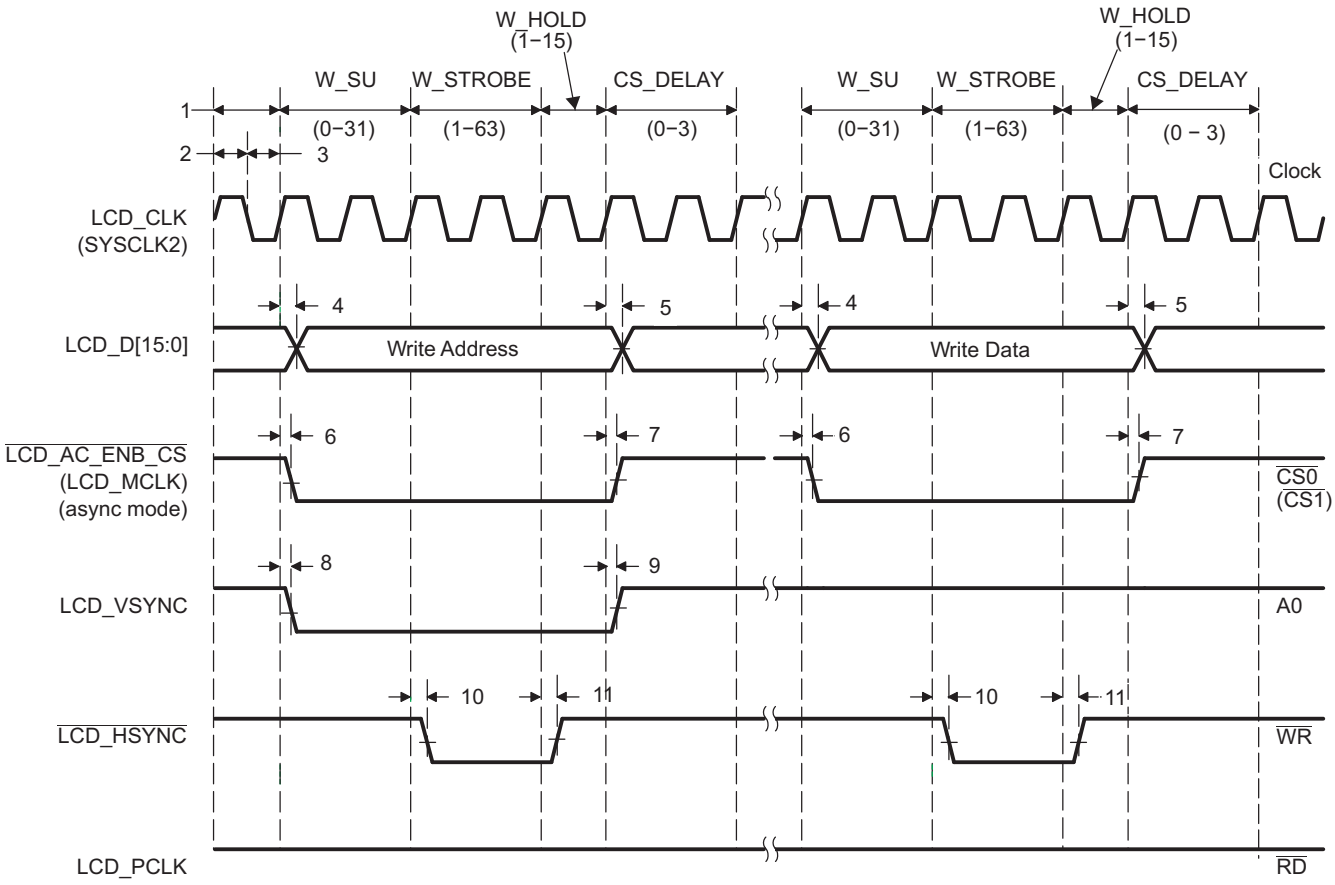

Figure 5-59. Micro-Interface Graphic Display 8080 Write

Copyright © 2011–2013, Texas Instruments Incorporated

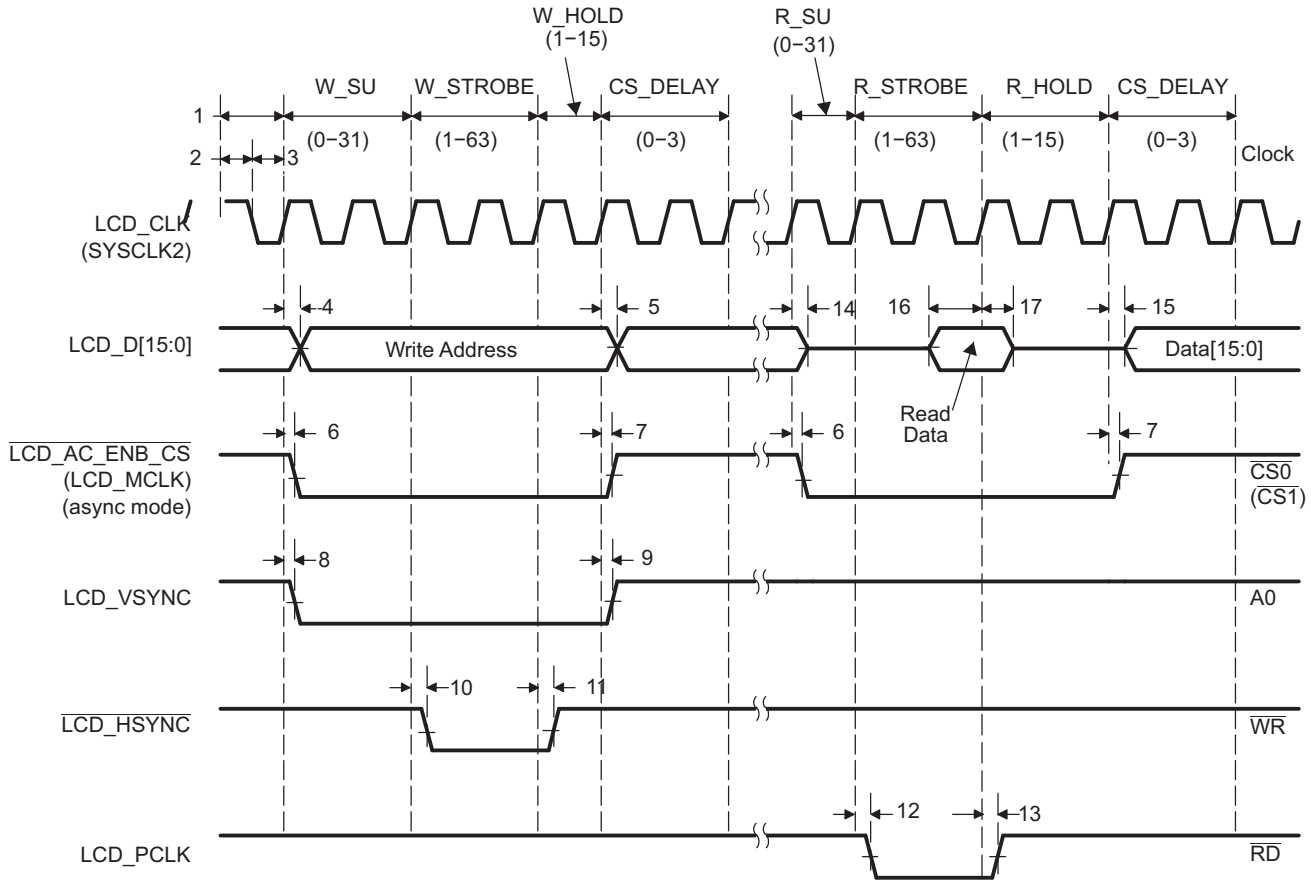

Figure 5-60. Micro-Interface Graphic Display 8080 Read

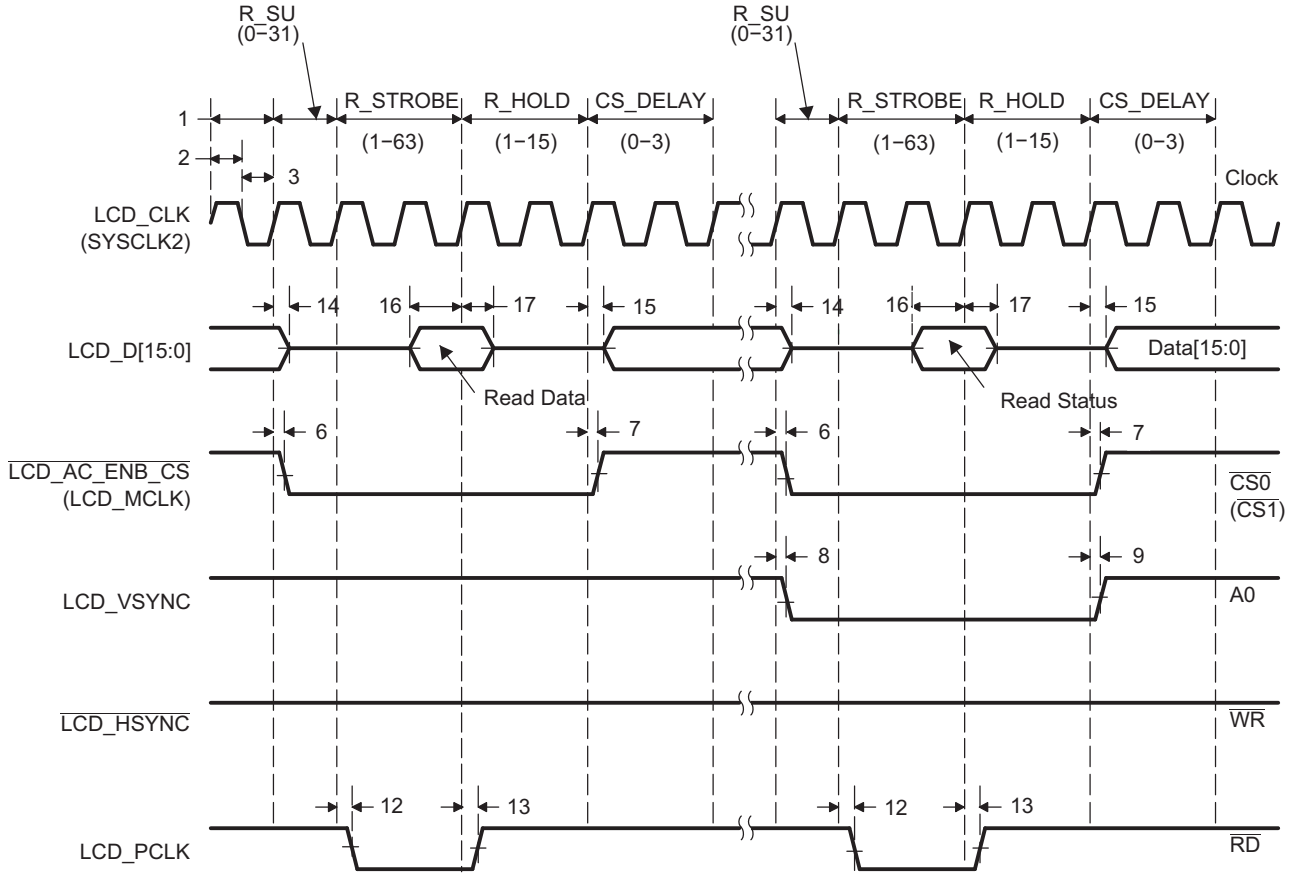

Figure 5-61. Micro-Interface Graphic Display 8080 Status

Copyright © 2011–2013, Texas Instruments Incorporated

5.24.2 LCD Raster Mode

Table 5-112. Switching Characteristics Over Recommended Operating Conditions for LCD Raster Mode

See Figure 5-62 through Figure 5-66

NO.	PARAMETER		1.3V, 1.2V, 1.1V		1.0V		UNIT
			MIN	MAX	MIN	MAX	
1	$t_{c(PIXEL_CLK)}$	Cycle time, pixel clock	26.66		33.33		ns
2	$t_{w(PIXEL_CLK_H)}$	Pulse duration, pixel clock high	10		10		ns
3	$t_{w(PIXEL_CLK_L)}$	Pulse duration, pixel clock low	10		10		ns
4	$t_{d(LCD_D_V)}$	Delay time, LCD_PCLK high to LCD_D[15:0] valid (write)	0	7	0	9	ns
5	$t_{d(LCD_D_IV)}$	Delay time, LCD_PCLK high to LCD_D[15:0] invalid (write)	0	7	0	9	ns
6	$t_{d(\overline{LCD_AC_ENB_CS_A})}$	Delay time, LCD_PCLK low to $\overline{LCD_AC_ENB_CS}$ high	0	7	0	9	ns
7	$t_{d(\overline{LCD_AC_ENB_CS_I})}$	Delay time, LCD_PCLK low to $\overline{LCD_AC_ENB_CS}$ high	0	7	0	9	ns
8	$t_{d(LCD_VSYNC_A)}$	Delay time, LCD_PCLK low to LCD_VSYNC high	0	7	0	9	ns
9	$t_{d(LCD_VSYNC_I)}$	Delay time, LCD_PCLK low to LCD_VSYNC low	0	7	0	9	ns
10	$t_{d(LCD_HSYNC_A)}$	Delay time, LCD_PCLK high to LCD_HSYNC high	0	7	0	9	ns
11	$t_{d(LCD_HSYNC_I)}$	Delay time, LCD_PCLK high to LCD_HSYNC low	0	7	0	9	ns

Frame-to-frame timing is derived through the following parameters in the LCD (RASTER_TIMING_1) register:

- Vertical front porch (VFP)
- Vertical sync pulse width (VSW)
- Vertical back porch (VBP)
- Lines per panel (LPP)

Line-to-line timing is derived through the following parameters in the LCD (RASTER_TIMING_0) register:

- Horizontal front porch (HFP)
- Horizontal sync pulse width (HSW)
- Horizontal back porch (HBP)
- Pixels per panel (PPL)

$\overline{LCD_AC_ENB_CS}$ timing is derived through the following parameter in the LCD (RASTER_TIMING_2) register:

- AC bias frequency (ACB)

The display format produced in raster mode is shown in Figure 5-62. An entire frame is delivered one line at a time. The first line delivered starts at data pixel (1, 1) and ends at data pixel (P, 1). The last line delivered starts at data pixel (1, L) and ends at data pixel (P, L). The beginning of each new frame is denoted by the activation of I/O signal LCD_VSYNC. The beginning of each new line is denoted by the activation of I/O signal LCD_HSYNC.

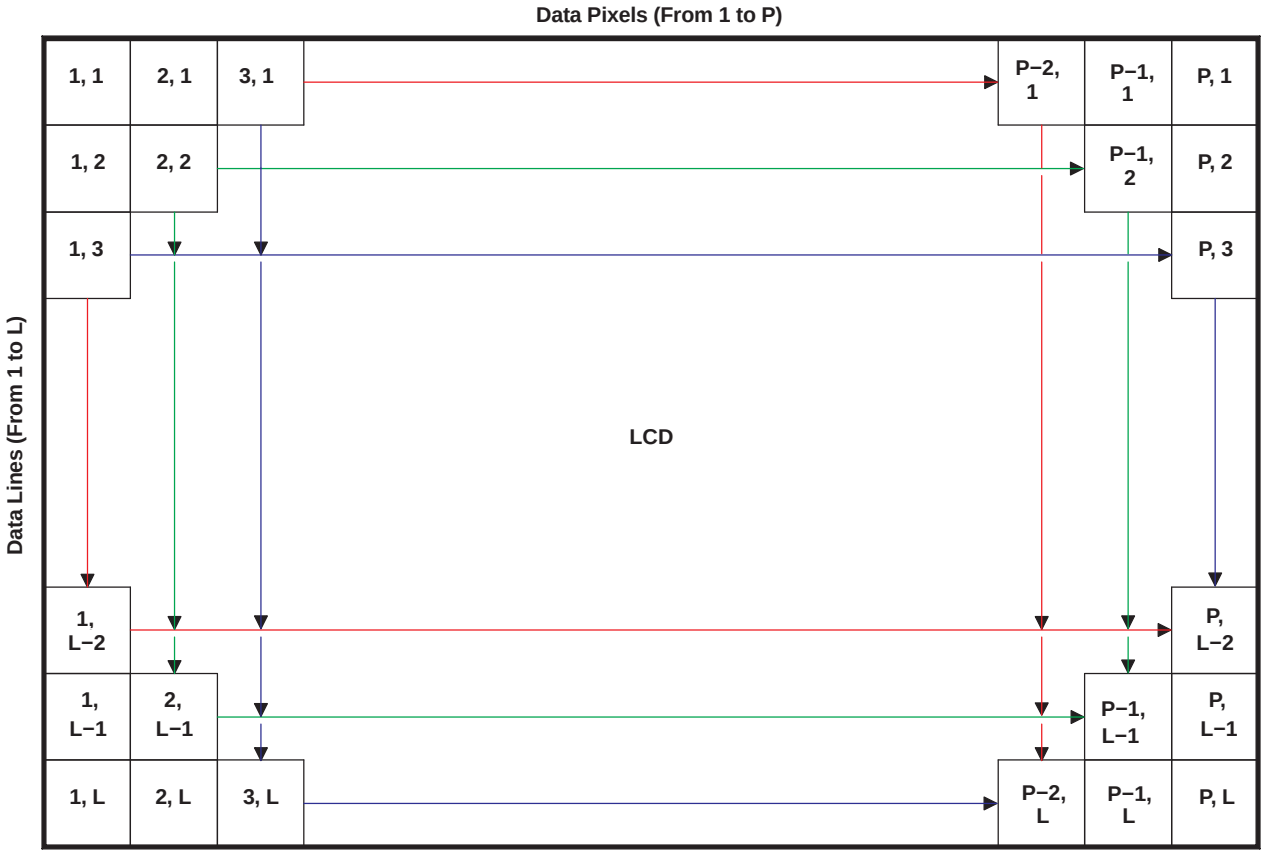

Figure 5-62. LCD Raster-Mode Display Format

Copyright © 2011–2013, Texas Instruments Incorporated

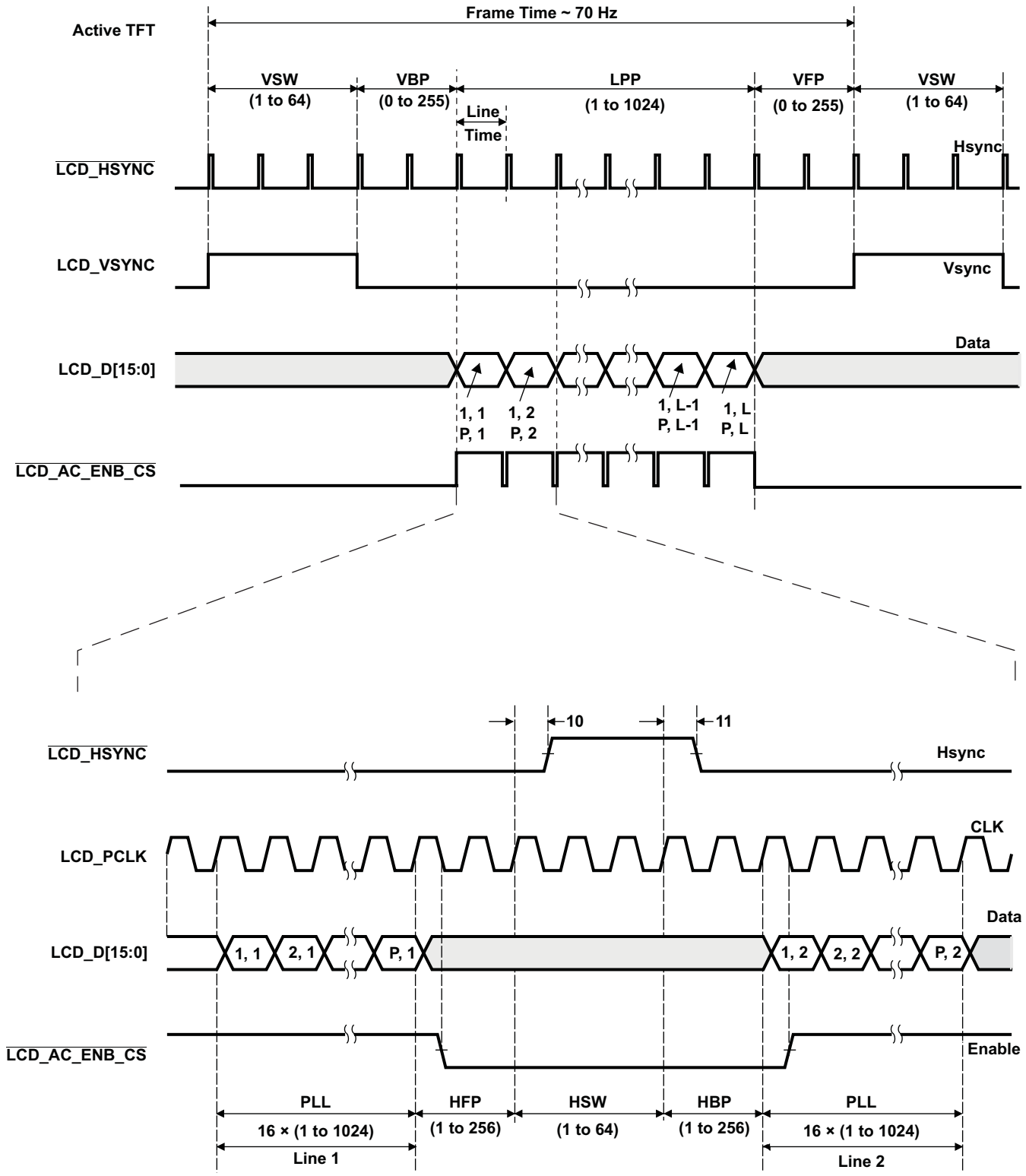

Figure 5-63. LCD Raster-Mode Active

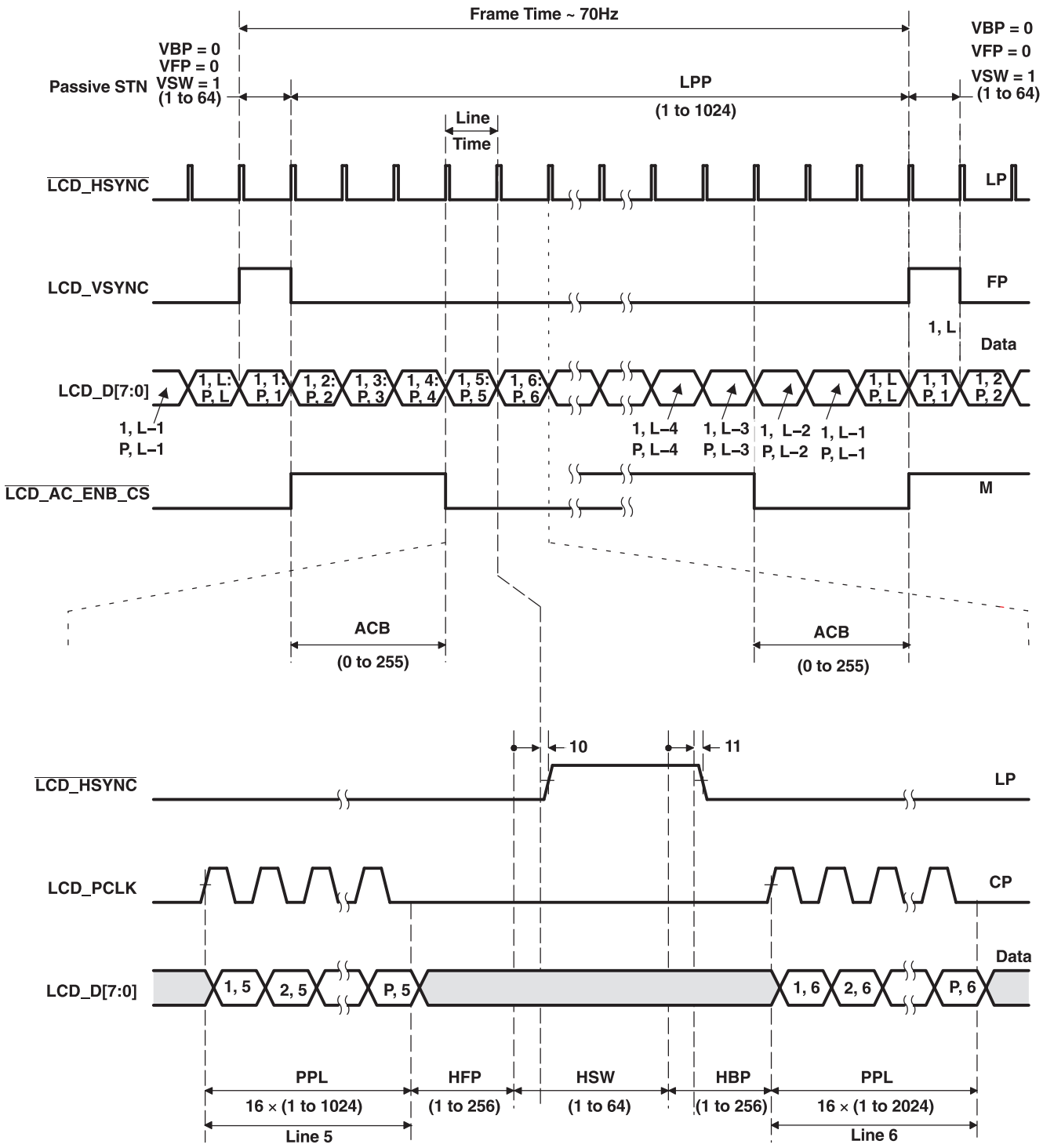

Figure 5-64. LCD Raster-Mode Passive

Copyright © 2011–2013, Texas Instruments Incorporated

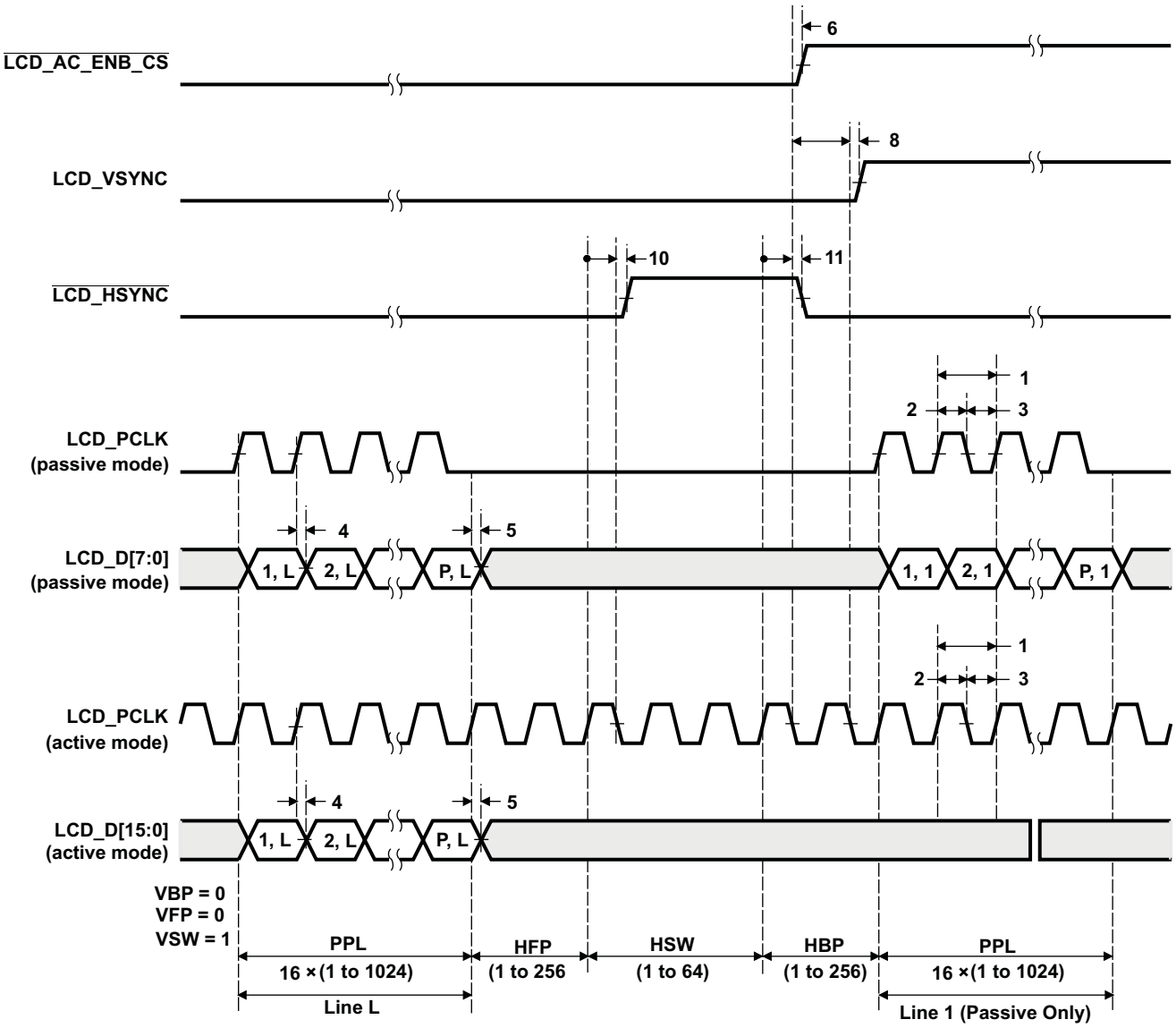

Figure 5-65. LCD Raster-Mode Control Signal Activation

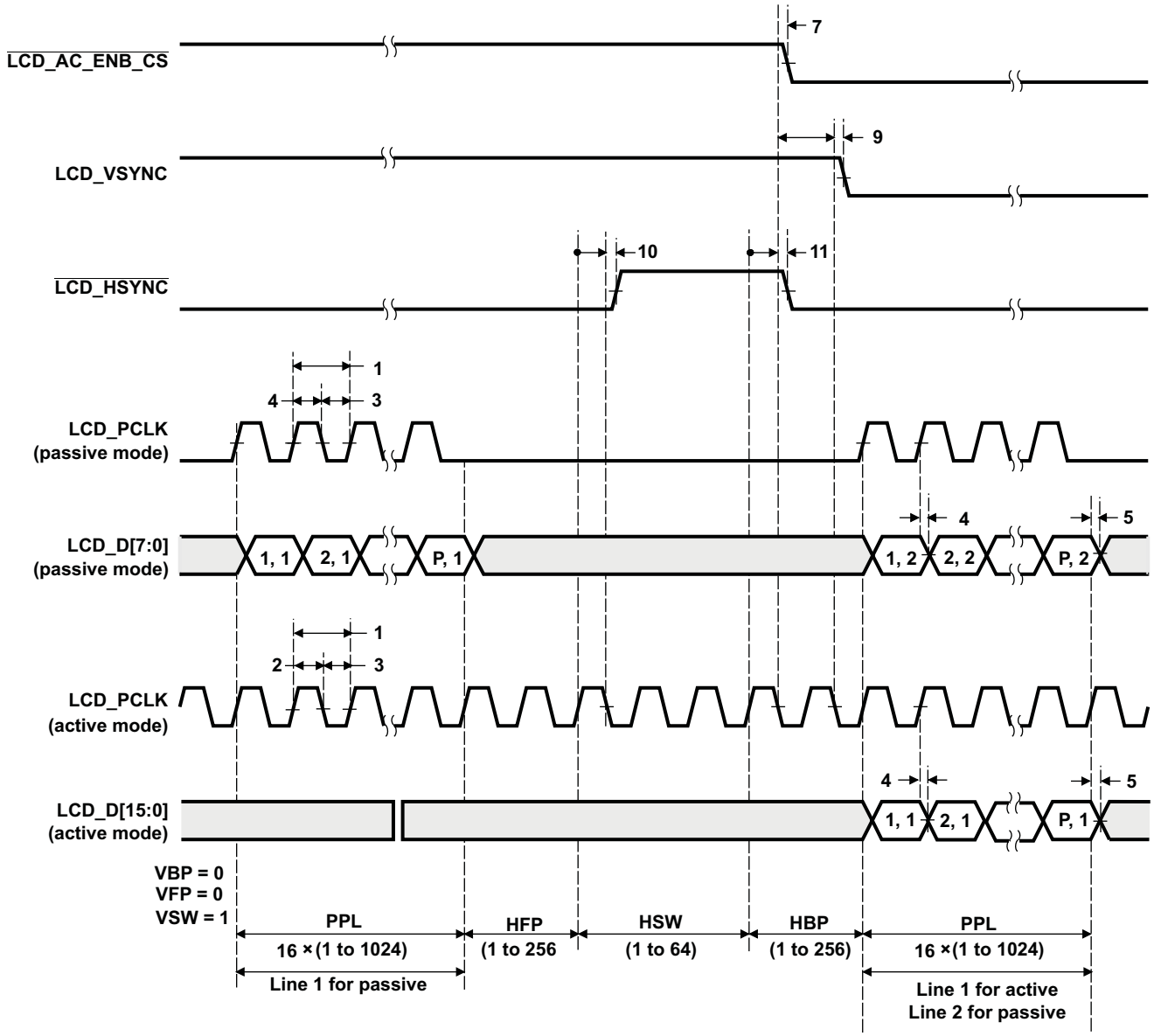

Figure 5-66. LCD Raster-Mode Control Signal Deactivation

Copyright © 2011–2013, Texas Instruments Incorporated

5.25 Host-Port Interface (UHPI)

5.25.1 HPI Device-Specific Information

The device includes a user-configurable 16-bit Host-port interface (HPI16).

The host port interface (UHPI) provides a parallel port interface through which an external host processor can directly access the processor's resources (configuration and program/data memories). The external host device is asynchronous to the CPU clock and functions as a master to the HPI interface. The UHPI enables a host device and the processor to exchange information via internal or external memory. Dedicated address (HPIA) and data (HPID) registers within the UHPI provide the data path between the external host interface and the processor resources. A UHPI control register (HPIC) is available to the host and the CPU for various configuration and interrupt functions.

5.25.2 HPI Peripheral Register Description(s)

Table 5-113. HPI Control Registers

BYTE ADDRESS	ACRONYM	REGISTER DESCRIPTION	COMMENTS
0x01E1 0000	PID	Peripheral Identification Register	
0x01E1 0004	PWREMU_MGMT	HPI power and emulation management register	The CPU has read/write access to the PWREMU_MGMT register.
0x01E1 0008	-	Reserved	
0x01E1 000C	GPIO_EN	General Purpose IO Enable Register	
0x01E1 0010	GPIO_DIR1	General Purpose IO Direction Register 1	
0x01E1 0014	GPIO_DAT1	General Purpose IO Data Register 1	
0x01E1 0018	GPIO_DIR2	General Purpose IO Direction Register 2	
0x01E1 001C	GPIO_DAT2	General Purpose IO Data Register 2	
0x01E1 0020	GPIO_DIR3	General Purpose IO Direction Register 3	
0x01E1 0024	GPIO_DAT3	General Purpose IO Data Register 3	
01E1 0028	-	Reserved	
01E1 002C	-	Reserved	
01E1 0030	HPIC	HPI control register	The Host and the CPU both have read/write access to the HPIC register.
01E1 0034	HPIA (HPIAW) (1)	HPI address register (Write)	The Host has read/write access to the HPIA registers. The CPU has only read access to the HPIA registers.
01E1 0038	HPIA (HPIAR) (1)	HPI address register (Read)	
01E1 000C - 01E1 07FF	-	Reserved	

(1) There are two 32-bit HPIA registers: HPIAR for read operations and HPIAW for write operations. The HPI can be configured such that HPIAR and HPIAW act as a single 32-bit HPIA (single-HPIA mode) or as two separate 32-bit HPIAs (dual-HPIA mode) from the perspective of the Host. The CPU can access HPIAW and HPIAR independently.

5.25.3 HPI Electrical Data/Timing

Table 5-114. Timing Requirements for Host-Port Interface [1.2V, 1.1V][(1) (2)]

NO.			1.3V, 1.2V, 1.1V, 1.0V		UNIT
			MIN	MAX	
1	$t_{su(SELV-HSTBL)}$	Setup time, select signals[(3)] valid before $\overline{UHPI_HSTROBE}$ low	5		ns
2	$t_{h(HSTBL-SELV)}$	Hold time, select signals[(3)] valid after $\overline{UHPI_HSTROBE}$ low	2		ns
3	$t_{w(HSTBL)}$	Pulse duration, $\overline{UHPI_HSTROBE}$ active low	15		ns
4	$t_{w(HSTBH)}$	Pulse duration, $\overline{UHPI_HSTROBE}$ inactive high between consecutive accesses	2M		ns
9	$t_{su(SELV-HASL)}$	Setup time, selects signals valid before $\overline{UHPI_HAS}$ low	5		ns
10	$t_{h(HASL-SELV)}$	Hold time, select signals valid after $\overline{UHPI_HAS}$ low	2		ns
11	$t_{su(HDV-HSTBH)}$	Setup time, host data valid before $\overline{UHPI_HSTROBE}$ high	5		ns
12	$t_{h(HSTBH-HDV)}$	Hold time, host data valid after $\overline{UHPI_HSTROBE}$ high	2		ns
13	$t_{h(HRDYL-HSTBH)}$	Hold time, $\overline{UHPI_HSTROBE}$ high after $\overline{UHPI_HRDY}$ low. $\overline{UHPI_HSTROBE}$ should not be inactivated until $\overline{UHPI_HRDY}$ is active (low); otherwise, HPI writes will not complete properly.	2		ns
16	$t_{su(HASL-HSTBL)}$	Setup time, $\overline{UHPI_HAS}$ low before $\overline{UHPI_HSTROBE}$ low	5		ns
17	$t_{h(HSTBL-HASH)}$	Hold time, $\overline{UHPI_HAS}$ low after $\overline{UHPI_HSTROBE}$ low	2		ns

(1) $\overline{UHPI_HSTROBE}$ refers to the following logical operation on $\overline{UHPI_HCS}$, $\overline{UHPI_HDS1}$, and $\overline{UHPI_HDS2}$: [NOT($\overline{UHPI_HDS1}$ XOR $\overline{UHPI_HDS2}$)] OR $\overline{UHPI_HCS}$.
(2) M=SYSCLK2 period in ns.
(3) Select signals include: HCNTL[1:0], HR/$\overline{W}$ and HHWIL.

Copyright © 2011–2013, Texas Instruments Incorporated

Table 5-115. Switching Characteristics Over Recommended Operating Conditions for Host-Port Interface [1.3V, 1.2V, 1.1V](1) (2) (3)

NO.	PARAMETER			1.3V, 1.2V		1.1V		UNIT
				MIN	MAX	MIN	MAX	
5	$t_{d(HSTBL-HRDYV)}$	Delay time, $\overline{HSTROBE}$ low to $\overline{HRDY}$ valid	For HPI Write, $\overline{HRDY}$ can go high (*not ready*) for these HPI Write conditions; otherwise, $\overline{HRDY}$ stays low (*ready*): *Case 1*: Back-to-back HPIA writes (can be either first or second half-word) *Case 2*: HPIA write following a PREFETCH command (can be either first or second half-word) *Case 3*: HPID write when FIFO is full or flushing (can be either first or second half-word) *Case 4*: HPIA write and Write FIFO not empty For HPI Read, $\overline{HRDY}$ can go high (*not ready*) for these HPI Read conditions: *Case 1*: HPID read (with auto-increment) and data not in Read FIFO (can only happen to first half-word of HPID access) *Case 2*: First half-word access of HPID Read without auto-increment For HPI Read, $\overline{HRDY}$ stays low (*ready*) for these HPI Read conditions: *Case 1*: HPID read with auto-increment and data is already in Read FIFO (applies to either half-word of HPID access) *Case 2*: HPID read without auto-increment and data is already in Read FIFO (always applies to second half-word of HPID access) *Case 3*: HPIC or HPIA read (applies to either half-word access)		15		17	ns
5a	$t_{d(HASL-HRDYV)}$	Delay time, $\overline{HAS}$ low to $\overline{HRDY}$ valid			15		17	ns
6	$t_{en(HSTBL-HDLZ)}$	Enable time, HD driven from $\overline{HSTROBE}$ low		1.5		1.5		ns
7	$t_{d(HRDYL-HDV)}$	Delay time, $\overline{HRDY}$ low to HD valid			0		0	ns
8	$t_{oh(HSTBH-HDV)}$	Output hold time, HD valid after $\overline{HSTROBE}$ high		1.5		1.5		ns
14	$t_{dis(HSTBH-HDHZ)}$	Disable time, HD high-impedance from $\overline{HSTROBE}$ high			15		17	ns
15	$t_{d(HSTBL-HDV)}$	Delay time, $\overline{HSTROBE}$ low to HD valid	For HPI Read. Applies to conditions where data is already residing in HPID/FIFO: *Case 1*: HPIC or HPIA read *Case 2*: First half-word of HPID read with auto-increment and data is already in Read FIFO *Case 3*: Second half-word of HPID read with or without auto-increment		15		17	ns
18	$t_{d(HSTBH-HRDYV)}$	Delay time, $\overline{HSTROBE}$ high to $\overline{HRDY}$ valid	For HPI Write, $\overline{HRDY}$ can go high (*not ready*) for these HPI Write conditions; otherwise, $\overline{HRDY}$ stays low (*ready*): *Case 1*: HPID write when Write FIFO is full (can happen to either half-word) *Case 2*: HPIA write (can happen to either half-word) *Case 3*: HPID write without auto-increment (only happens to second half-word)		15		17	ns

(1) M=SYSCLK2 period in ns.
(2) $\overline{HSTROBE}$ refers to the following logical operation on $\overline{HCS}$, $\overline{HDS1}$, and $\overline{HDS2}$: [NOT($\overline{HDS1}$ XOR $\overline{HDS2}$)] OR $\overline{HCS}$.
(3) By design, whenever $\overline{HCS}$ is driven inactive (high), HPI will drive $\overline{HRDY}$ active (low).

Table 5-116. Switching Characteristics Over Recommended Operating Conditions for Host-Port Interface [1.0V](1) (2) (3)

NO.	PARAMETER			1.0V MIN	1.0V MAX	UNIT
5	$t_{d(HSTBL-HRDYV)}$	Delay time, $\overline{HSTROBE}$ low to $\overline{HRDY}$ valid	For HPI Write, $\overline{HRDY}$ can go high (*not ready*) for these HPI Write conditions; otherwise, $\overline{HRDY}$ stays low (*ready*): *Case 1*: Back-to-back HPIA writes (can be either first or second half-word) *Case 2*: HPIA write following a PREFETCH command (can be either first or second half-word) *Case 3*: HPID write when FIFO is full or flushing (can be either first or second half-word) *Case 4*: HPIA write and Write FIFO not empty For HPI Read, $\overline{HRDY}$ can go high (*not ready*) for these HPI Read conditions: *Case 1*: HPID read (with auto-increment) and data not in Read FIFO (can only happen to first half-word of HPID access) *Case 2*: First half-word access of HPID Read without auto-increment For HPI Read, $\overline{HRDY}$ stays low (*ready*) for these HPI Read conditions: *Case 1*: HPID read with auto-increment and data is already in Read FIFO (applies to either half-word of HPID access) *Case 2*: HPID read without auto-increment and data is already in Read FIFO (always applies to second half-word of HPID access) *Case 3*: HPIC or HPIA read (applies to either half-word access)		22	ns
5a	$t_{d(HASL-HRDYV)}$	Delay time, $\overline{HAS}$ low to $\overline{HRDY}$ valid			22	ns
6	$t_{en(HSTBL-HDLZ)}$	Enable time, HD driven from $\overline{HSTROBE}$ low		1.5		ns
7	$t_{d(HRDYL-HDV)}$	Delay time, $\overline{HRDY}$ low to HD valid			0	ns
8	$t_{oh(HSTBH-HDV)}$	Output hold time, HD valid after $\overline{HSTROBE}$ high		1.5		ns
14	$t_{dis(HSTBH-HDHZ)}$	Disable time, HD high-impedance from $\overline{HSTROBE}$ high			22	ns
15	$t_{d(HSTBL-HDV)}$	Delay time, $\overline{HSTROBE}$ low to HD valid	For HPI Read. Applies to conditions where data is already residing in HPID/FIFO: *Case 1*: HPIC or HPIA read *Case 2*: First half-word of HPID read with auto-increment and data is already in Read FIFO *Case 3*: Second half-word of HPID read with or without auto-increment		22	ns
18	$t_{d(HSTBH-HRDYV)}$	Delay time, $\overline{HSTROBE}$ high to $\overline{HRDY}$ valid	For HPI Write, $\overline{HRDY}$ can go high (*not ready*) for these HPI Write conditions; otherwise, $\overline{HRDY}$ stays low (*ready*): *Case 1*: HPID write when Write FIFO is full (can happen to either half-word) *Case 2*: HPIA write (can happen to either half-word) *Case 3*: HPID write without auto-increment (only happens to second half-word)		22	ns

(1) M=SYSCLK2 period in ns.
(2) $\overline{HSTROBE}$ refers to the following logical operation on $\overline{HCS}$, $\overline{HDS1}$, and $\overline{HDS2}$: [NOT($\overline{HDS1}$ XOR $\overline{HDS2}$)] OR $\overline{HCS}$.
(3) By design, whenever $\overline{HCS}$ is driven inactive (high), HPI will drive $\overline{HRDY}$ active (low).

Copyright © 2011–2013, Texas Instruments Incorporated

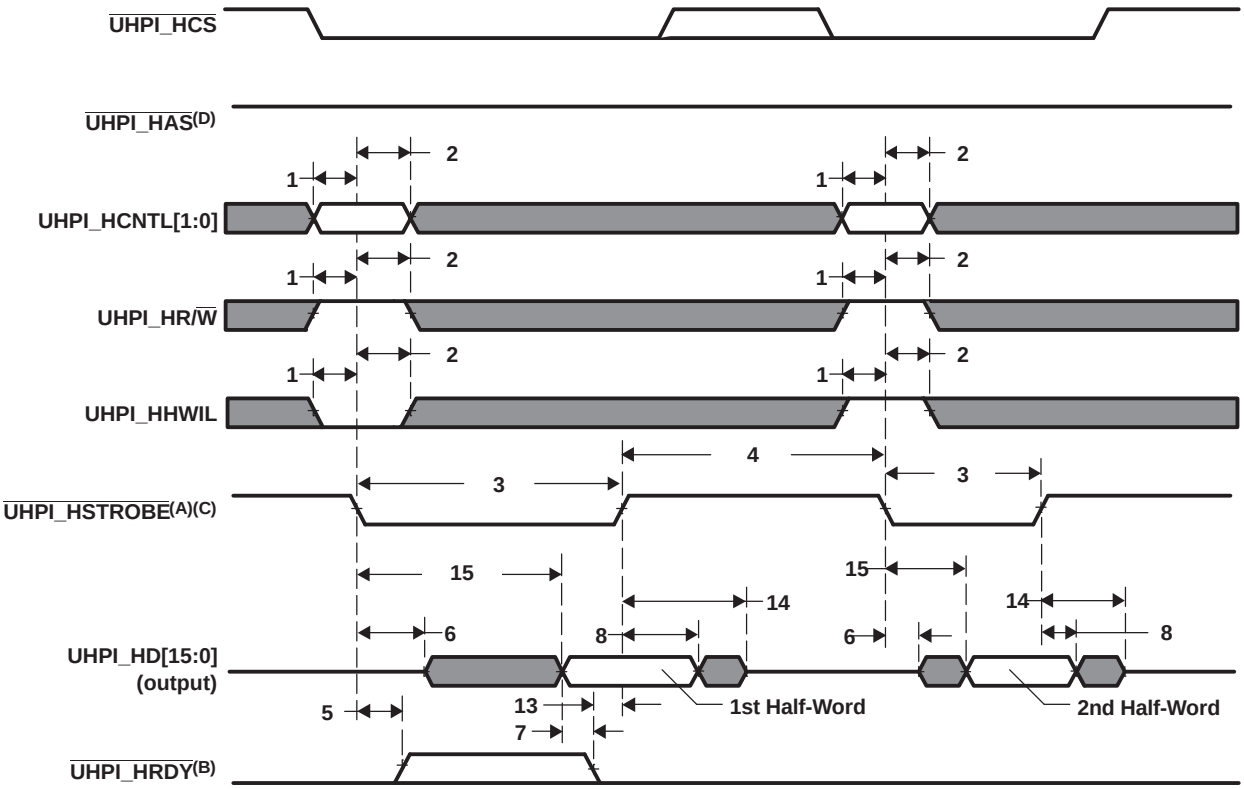

A. UHPI_HSTROBE refers to the following logical operation on UHPI_HCS, UHPI_HDS1, and UHPI_HDS2: [NOT(HDS1 XOR HDS2)] OR UHPI_HCS.
B. Depending on the type of write or read operation (HPID without auto-incrementing; HPIA, HPIC, or HPID with auto-incrementing)and the state of the FIFO, transitions on UHPI_HRDY may or may not occur.
C. UHPI_HCS reflects typical UHPI_HCS behavior when UHPI_HSTROBE assertion is caused by UHPI_HDS1 or UHPI_HDS2. UHPI_HCS timing requirements are reflected by parameters for UHPI_HSTROBE.
D The diagram above assumes UHPI_HAS has been pulled high.

Figure 5-67. UHPI Read Timing (HAS Not Used, Tied High)

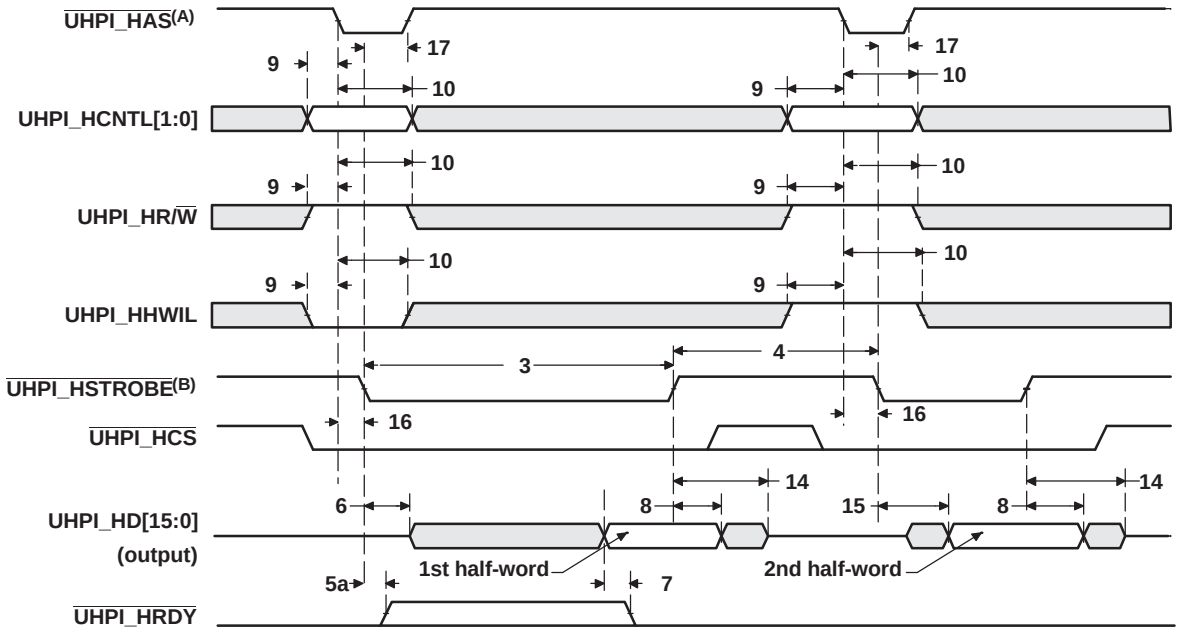

A. For correct operation, strobe the $\overline{\text{UHPI_HAS}}$ signal only once per $\overline{\text{UHPI_HSTROBE}}$ active cycle.

B. $\overline{\text{UHPI_HSTROBE}}$ refers to the following logical operation on $\overline{\text{UHPI_HCS}}$, $\overline{\text{UHPI_HDS1}}$, and $\overline{\text{UHPI_HDS2}}$: [NOT($\overline{\text{UHPI_HDS1}}$ XOR $\overline{\text{UHPI_HDS2}}$)] OR $\overline{\text{UHPI_HCS}}$.

Figure 5-68. UHPI Read Timing ($\overline{\text{HAS}}$ Used)

Copyright © 2011–2013, Texas Instruments Incorporated

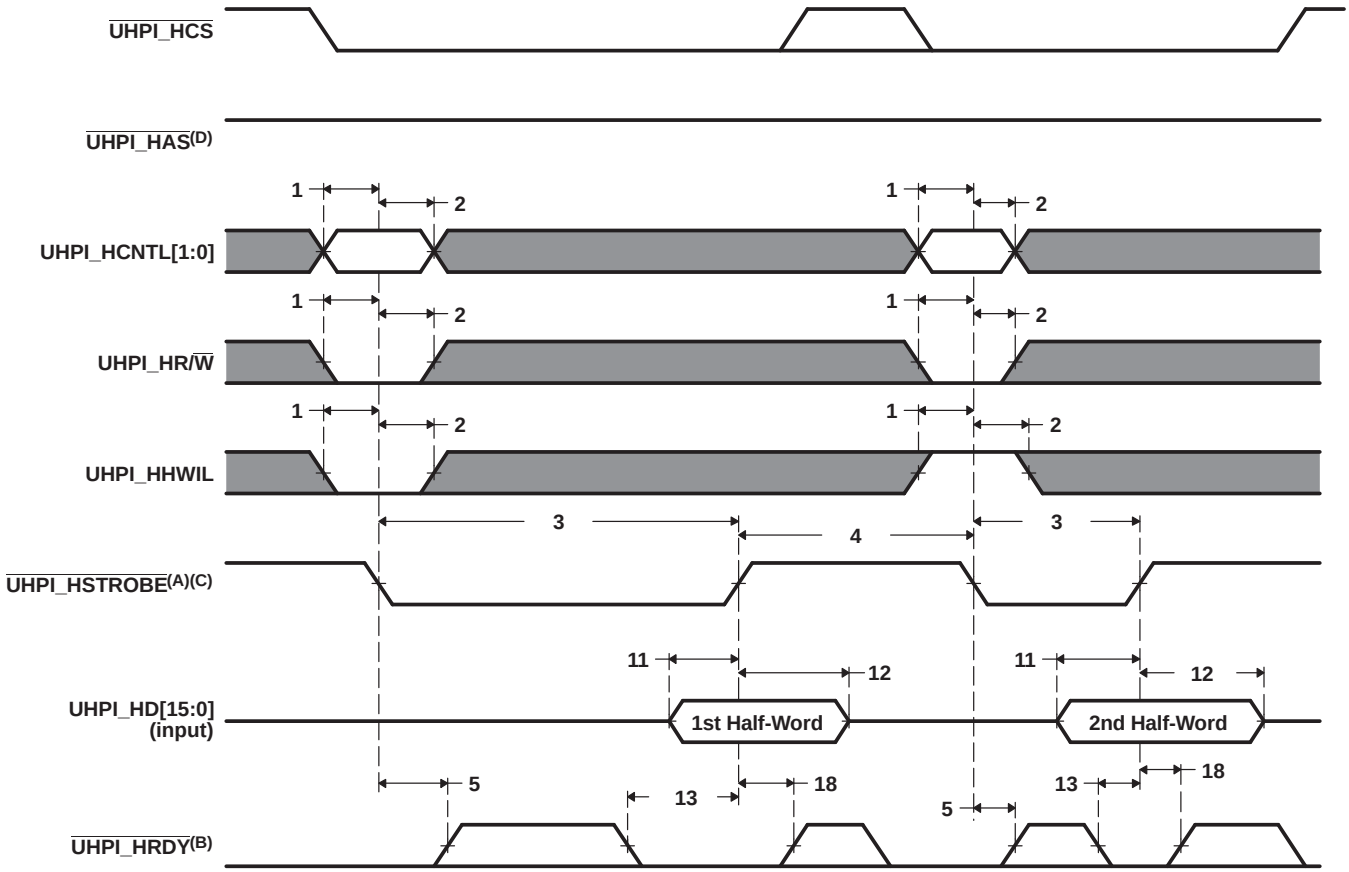

A. UHPI_HSTROBE refers to the following logical operation on UHPI_HCS, UHPI_HDS1, and UHPI_HDS2: [NOT(HDS1 XOR HDS2)] OR UHPI_HCS.
B. Depending on the type of write or read operation (HPID without auto-incrementing; HPIA, HPIC, or HPID with auto-incrementing) and the state of the FIFO, transitions on UHPI_HRDY may or may not occur.
C. UHPI_HCS reflects typical UHPI_HCS behavior when UHPI_HSTROBE assertion is caused by UHPI_HDS1 or UHPI_HDS2. UHPI_HCS timing requirements are reflected by parameters for UHPI_HSTROBE.
D The diagram above assumes UHPI_HAS has been pulled high.

Figure 5-69. UHPI Write Timing (HAS Not Used, Tied High)

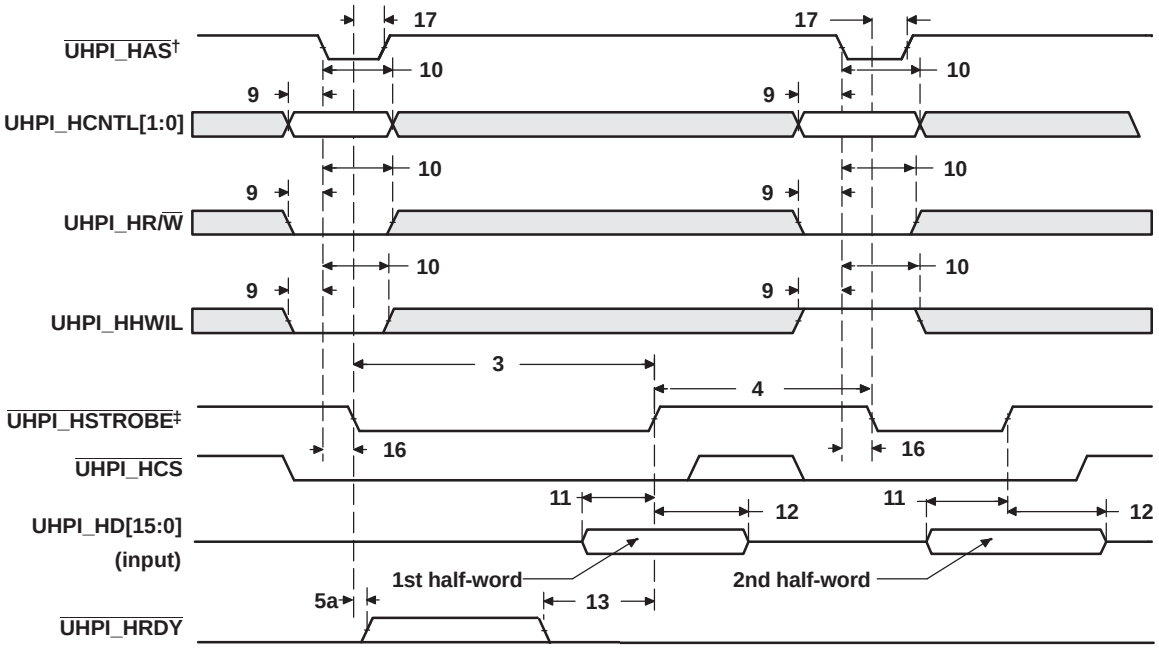

A. For correct operation, strobe the UHPI_HAS signal only once per UHPI_HSTROBE active cycle.

B. UHPI_HSTROBE refers to the following logical operation on UHPI_HCS, UHPI_HDS1, and UHPI_HDS2: [NOT(UHPI_HDS1 XOR UHPI_HDS2)] OR UHPI_HCS.

Figure 5-70. UHPI Write Timing (HAS Used)

Copyright © 2011–2013, Texas Instruments Incorporated

5.26 Universal Parallel Port (uPP)

The Universal Parallel Port (uPP) peripheral is a multichannel, high-speed parallel interface with dedicated data lines and minimal control signals. It is designed to interface cleanly with high-speed analog-to-digital converters (ADCs) or digital-to-analog converters (DACs) with up to 16-bit data width (per channel). It may also be interconnected with field-programmable gate arrays (FPGAs) or other uPP devices to achieve high-speed digital data transfer. It can operate in receive mode, transmit mode, or duplex mode, in which its individual channels operate in opposite directions.

The uPP peripheral includes an internal DMA controller to maximize throughput and minimize CPU overhead during high-speed data transmission. All uPP transactions use the internal DMA to provide data to or retrieve data from the I/O channels. The DMA controller includes two DMA channels, which typically service separate I/O channels. The uPP peripheral also supports data interleave mode, in which all DMA resources service a single I/O channel. In this mode, only one I/O channel may be used.

The features of the uPP include:

- Programmable data width per channel (from 8 to 16 bits inclusive)
- Programmable data justification
  - Right-justify with zero extend
  - Right-justify with sign extend
  - Left-justify with zero fill
- Supports multiplexing of interleaved data during SDR transmit
- Optional frame START signal with programmable polarity
- Optional data ENABLE signal with programmable polarity
- Optional synchronization WAIT signal with programmable polarity
- Single Data Rate (SDR) or Double data Rate (DDR, interleaved) interface
  - Supports multiplexing of interleaved data during SDR transmit
  - Supports demultiplexing and multiplexing of interleaved data during DDR transfers

5.26.1 uPP Register Descriptions

Table 5-117. Universal Parallel Port (uPP) Registers

BYTE ADDRESS	ACRONYM	REGISTER DESCRIPTION
0x01E1 6000	UPPID	uPP Peripheral Identification Register
0x01E1 6004	UPPCR	uPP Peripheral Control Register
0x01E1 6008	UPDLB	uPP Digital Loopback Register
0x01E1 6010	UPCTL	uPP Channel Control Register
0x01E1 6014	UPICR	uPP Interface Configuration Register
0x01E1 6018	UPIVR	uPP Interface Idle Value Register
0x01E1 601C	UPTCR	uPP Threshold Configuration Register
0x01E1 6020	UPISR	uPP Interrupt Raw Status Register
0x01E1 6024	UPIER	uPP Interrupt Enabled Status Register
0x01E1 6028	UPIES	uPP Interrupt Enable Set Register
0x01E1 602C	UPIEC	uPP Interrupt Enable Clear Register
0x01E1 6030	UPEOI	uPP End-of-Interrupt Register
0x01E1 6040	UPID0	uPP DMA Channel I Descriptor 0 Register
0x01E1 6044	UPID1	uPP DMA Channel I Descriptor 1 Register
0x01E1 6048	UPID2	uPP DMA Channel I Descriptor 2 Register
0x01E1 6050	UPIS0	uPP DMA Channel I Status 0 Register
0x01E1 6054	UPIS1	uPP DMA Channel I Status 1 Register
0x01E1 6058	UPIS2	uPP DMA Channel I Status 2 Register
0x01E1 6060	UPQD0	uPP DMA Channel Q Descriptor 0 Register
0x01E1 6064	UPQD1	uPP DMA Channel Q Descriptor 1 Register
0x01E1 6068	UPQD2	uPP DMA Channel Q Descriptor 2 Register
0x01E1 6070	UPQS0	uPP DMA Channel Q Status 0 Register
0x01E1 6074	UPQS1	uPP DMA Channel Q Status 1 Register
0x01E1 6078	UPQS2	uPP DMA Channel Q Status 2 Register

Copyright © 2011–2013, Texas Instruments Incorporated

5.26.2 uPP Electrical Data/Timing

Table 5-118. Timing Requirements for uPP (see Figure 5-71, Figure 5-72, Figure 5-73, Figure 5-74)

NO.	PARAMETER			1.3V, 1.2V		1.1V		1.0V		UNIT
				MIN	MAX	MIN	MAX	MIN	MAX	
1	$t_{c(INCLK)}$	Cycle time, CH*n*_CLK	SDR mode	13.33		20		26.66		ns
			DDR mode	26.66		40		53.33		
2	$t_{w(INCLKH)}$	Pulse width, CH*n*_CLK high	SDR mode	5		8		10		ns
			DDR mode	10		16		20		
3	$t_{w(INCLKL)}$	Pulse width, CH*n*_CLK low	SDR mode	5		8		10		ns
			DDR mode	10		16		20		
4	$t_{su(STV-INCLKH)}$	Setup time, CH*n*_START valid before CH*n*_CLK high		4		5.5		6.5		ns
5	$t_{h(INCLKH-STV)}$	Hold time, CH*n*_START valid after CH*n*_CLK high		0.8		0.8		0.8		ns
6	$t_{su(ENV-INCLKH)}$	Setup time, CH*n*_ENABLE valid before CH*n*_CLK high		4		5.5		6.5		ns
7	$t_{h(INCLKH-ENV)}$	Hold time, CH*n*_ENABLE valid after CH*n*_CLK high		0.8		0.8		0.8		ns
8	$t_{su(DV-INCLKH)}$	Setup time, CH*n*_DATA/XDATA valid before CH*n*_CLK high		4		5.5		6.5		ns
9	$t_{h(INCLKH-DV)}$	Hold time, CH*n*_DATA/XDATA valid after CH*n*_CLK high		0.8		0.8		0.8		ns
10	$t_{su(DV-INCLKL)}$	Setup time, CH*n*_DATA/XDATA valid before CH*n*_CLK low		4		5.5		6.5		ns
11	$t_{h(INCLKL-DV)}$	Hold time, CH*n*_DATA/XDATA valid after CH*n*_CLK low		0.8		0.8		0.8		ns
19	$t_{su(WTV-INCLKL)}$	Setup time, CH*n*_WAIT valid before CH*n*_CLK high		10		12		14		ns
20	$t_{h(INCLKL-WTV)}$	Hold time, CH*n*_WAIT valid after CH*n*_CLK high		0.8		0.8		0.8		ns
21	$t_{c(2xTXCLK)}$	Cycle time, 2xTXCLK input clock (1)		6.66		10		13.33		ns

(1) 2xTXCLK is an alternate transmit clock source that must be at least 2 times the required uPP transmit clock rate (as it is is divided down by 2 inside the uPP). 2xTXCLK has no specified skew relationship to the CH*n*_CLOCK and therefore is not shown in the timing diagram.

Table 5-119. Switching Characteristics Over Recommended Operating Conditions for uPP

NO.	PARAMETER			1.3V, 1.2V		1.1V		1.0V		UNIT
				MIN	MAX	MIN	MAX	MIN	MAX	
12	$t_{c(OUTCLK)}$	Cycle time, CH*n*_CLK	SDR mode	13.33		20		26.66		ns
			DDR mode	26.66		40		53.33		
13	$t_{w(OUTCLKH)}$	Pulse width, CH*n*_CLK high	SDR mode	5		8		10		ns
			DDR mode	10		16		20		
14	$t_{w(OUTCLKL)}$	Pulse width, CH*n*_CLK low	SDR mode	5		8		10		ns
			DDR mode	10		16		20		
15	$t_{d(OUTCLKH-STV)}$	Delay time, CH*n*_START valid after CH*n*_CLK high		2	11	2	15	2	21	ns
16	$t_{d(OUTCLKH-ENV)}$	Delay time, CH*n*_ENABLE valid after CH*n*_CLK high		2	11	2	15	2	21	ns
17	$t_{d(OUTCLKH-DV)}$	Delay time, CH*n*_DATA/XDATA valid after CH*n*_CLK high		2	11	2	15	2	21	ns
18	$t_{d(OUTCLKL-DV)}$	Delay time, CH*n*_DATA/XDATA valid after CH*n*_CLK low		2	11	2	15	2	21	ns

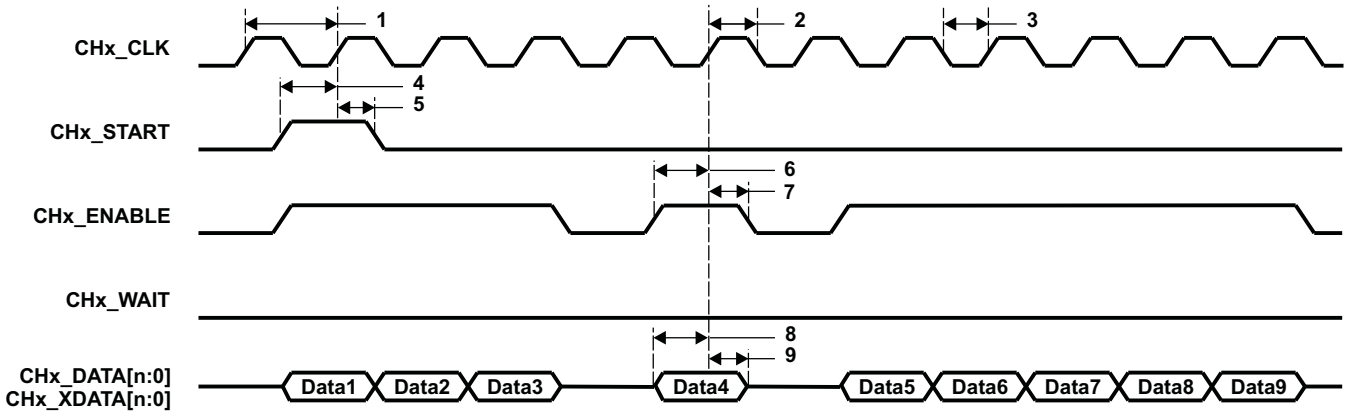

Figure 5-71. uPP Single Data Rate (SDR) Receive Timing

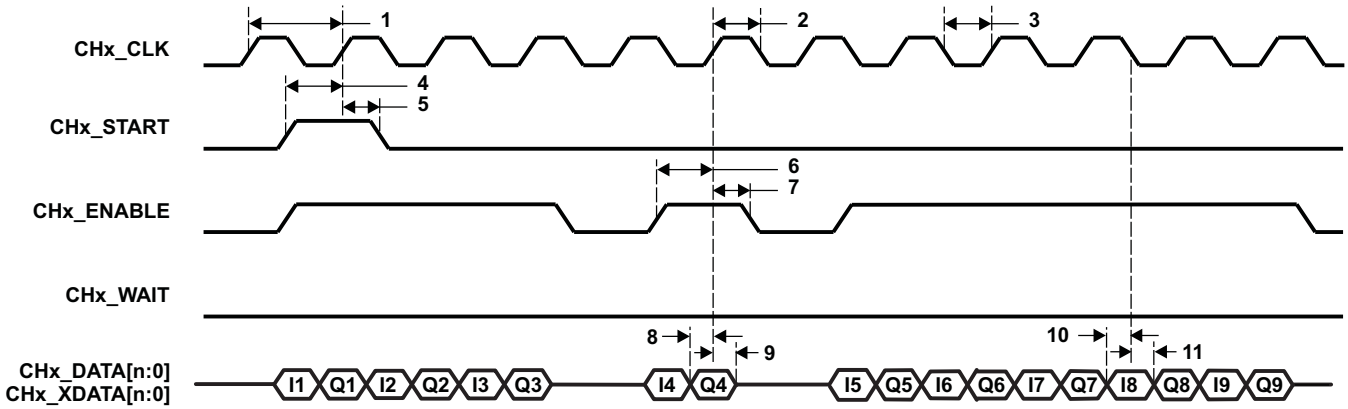

Figure 5-72. uPP Double Data Rate (DDR) Receive Timing

Copyright © 2011–2013, Texas Instruments Incorporated

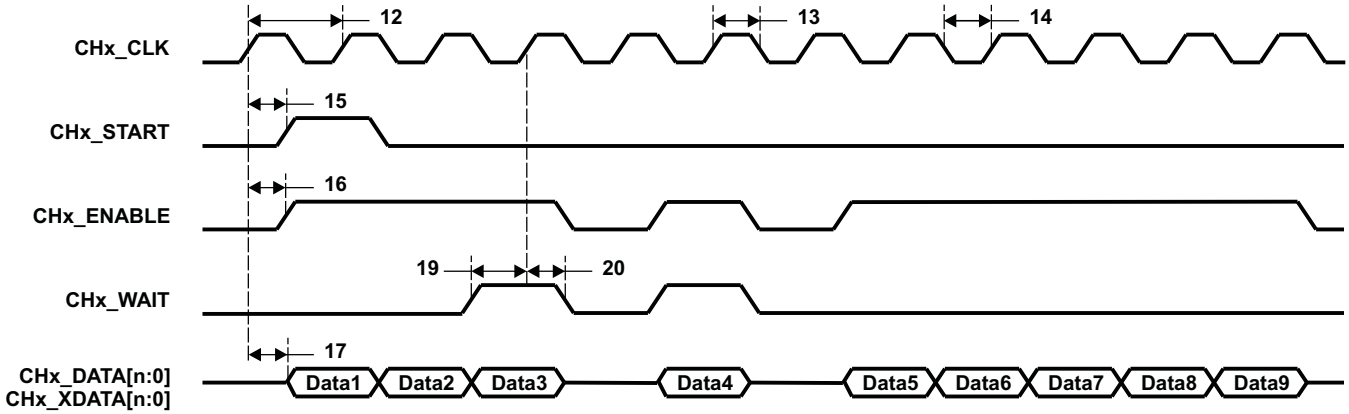

Figure 5-73. uPP Single Data Rate (SDR) Transmit Timing

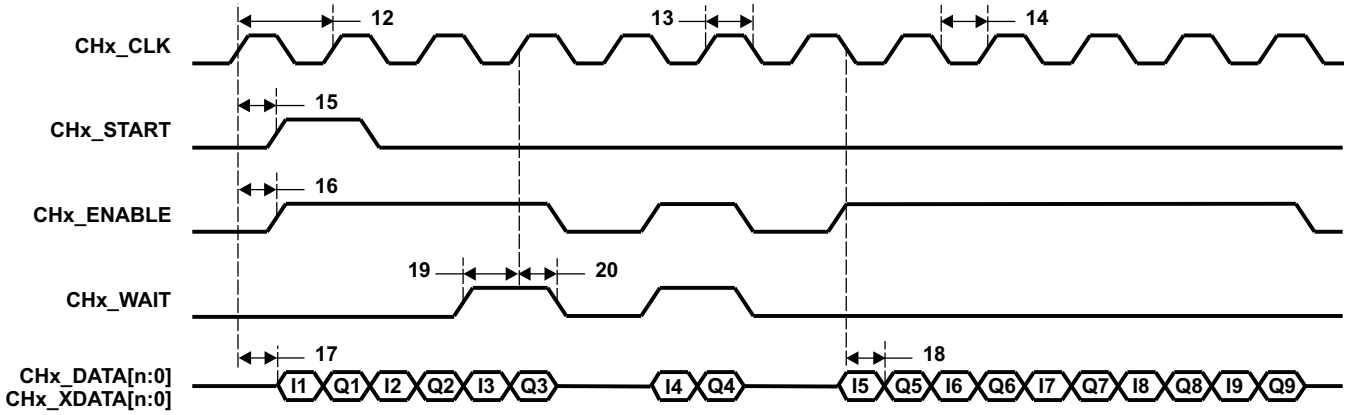

Figure 5-74. uPP Double Data Rate (DDR) Transmit Timing

5.27 Video Port Interface (VPIF)

The Video Port Interface (VPIF) allows the capture and display of digital video streams. Features include:

- Up to 2 Video Capture Channels (Channel 0 and Channel 1)
  - Two 8-bit Standard-Definition (SD) Video with embedded timing codes (BT.656)
  - Single 16-bit High-Definition (HD) Video with embedded timing codes (BT.1120)
  - Single Raw Video (8-/10-/12-bit)
- Up to 2 Video Display Channels (Channel 2 and Channel 3)
  - Two 8-bit SD Video Display with embedded timing codes (BT.656)
  - Single 16-bit HD Video Display with embedded timing codes (BT.1120)

The VPIF capture channel input data format is selectable based on the settings of the specific Channel Control Register (Channels 0–3). The VPIF Raw Video data-bus width is selectable based on the settings of the Channel 0 Control Register.

 Copyright © 2011–2013, Texas Instruments Incorporated

5.27.1 VPIF Register Descriptions

Table 5-120 shows the VPIF registers.

Table 5-120. Video Port Interface (VPIF) Registers

BYTE ADDRESS	ACRONYM	REGISTER DESCRIPTION
0x01E1 7000	PID	Peripheral identification register
0x01E1 7004	CH0_CTRL	Channel 0 control register
0x01E1 7008	CH1_CTRL	Channel 1 control register
0x01E1 700C	CH2_CTRL	Channel 2 control register
0x01E1 7010	CH3_CTRL	Channel 3 control register
0x01E1 7014 - 0x01E1 701F	-	Reserved
0x01E1 7020	INTEN	Interrupt enable
0x01E1 7024	INTENSET	Interrupt enable set
0x01E1 7028	INTENCLR	Interrupt enable clear
0x01E1 702C	INTSTAT	Interrupt status
0x01E1 7030	INTSTATCLR	Interrupt status clear
0x01E1 7034	EMU_CTRL	Emulation control
0x01E1 7038	DMA_SIZE	DMA size control
0x01E1 703C - 0x01E1 703F	-	Reserved
CAPTURE CHANNEL 0 REGISTERS		
0x01E1 7040	CH0_TY_STRTADR	Channel 0 Top Field luma buffer start address
0x01E1 7044	CH0_BY_STRTADR	Channel 0 Bottom Field luma buffer start address
0x01E1 7048	CH0_TC_STRTADR	Channel 0 Top Field chroma buffer start address
0x01E1 704C	CH0_BC_STRTADR	Channel 0 Bottom Field chroma buffer start address
0x01E1 7050	CH0_THA_STRTADR	Channel 0 Top Field horizontal ancillary data buffer start address
0x01E1 7054	CH0_BHA_STRTADR	Channel 0 Bottom Field horizontal ancillary data buffer start address
0x01E1 7058	CH0_TVA_STRTADR	Channel 0 Top Field vertical ancillary data buffer start address
0x01E1 705C	CH0_BVA_STRTADR	Channel 0 Bottom Field vertical ancillary data buffer start address
0x01E1 7060	CH0_SUBPIC_CFG	Channel 0 sub-picture configuration
0x01E1 7064	CH0_IMG_ADD_OFST	Channel 0 image data address offset
0x01E1 7068	CH0_HA_ADD_OFST	Channel 0 horizontal ancillary data address offset
0x01E1 706C	CH0_HSIZE_CFG	Channel 0 horizontal data size configuration
0x01E1 7070	CH0_VSIZE_CFG0	Channel 0 vertical data size configuration (0)
0x01E1 7074	CH0_VSIZE_CFG1	Channel 0 vertical data size configuration (1)
0x01E1 7078	CH0_VSIZE_CFG2	Channel 0 vertical data size configuration (2)
0x01E1 707C	CH0_VSIZE	Channel 0 vertical image size
CAPTURE CHANNEL 1 REGISTERS		
0x01E1 7080	CH1_TY_STRTADR	Channel 1 Top Field luma buffer start address
0x01E1 7084	CH1_BY_STRTADR	Channel 1 Bottom Field luma buffer start address
0x01E1 7088	CH1_TC_STRTADR	Channel 1 Top Field chroma buffer start address
0x01E1 708C	CH1_BC_STRTADR	Channel 1 Bottom Field chroma buffer start address
0x01E1 7090	CH1_THA_STRTADR	Channel 1 Top Field horizontal ancillary data buffer start address
0x01E1 7094	CH1_BHA_STRTADR	Channel 1 Bottom Field horizontal ancillary data buffer start address
0x01E1 7098	CH1_TVA_STRTADR	Channel 1 Top Field vertical ancillary data buffer start address
0x01E1 709C	CH1_BVA_STRTADR	Channel 1 Bottom Field vertical ancillary data buffer start address
0x01E1 70A0	CH1_SUBPIC_CFG	Channel 1 sub-picture configuration
0x01E1 70A4	CH1_IMG_ADD_OFST	Channel 1 image data address offset
0x01E1 70A8	CH1_HA_ADD_OFST	Channel 1 horizontal ancillary data address offset
0x01E1 70AC	CH1_HSIZE_CFG	Channel 1 horizontal data size configuration

Table 5-120. Video Port Interface (VPIF) Registers (continued)

BYTE ADDRESS	ACRONYM	REGISTER DESCRIPTION
0x01E1 70B0	CH1_VSIZE_CFG0	Channel 1 vertical data size configuration (0)
0x01E1 70B4	CH1_VSIZE_CFG1	Channel 1 vertical data size configuration (1)
0x01E1 70B8	CH1_VSIZE_CFG2	Channel 1 vertical data size configuration (2)
0x01E1 70BC	CH1_VSIZE	Channel 1 vertical image size
DISPLAY CHANNEL 2 REGISTERS		
0x01E1 70C0	CH2_TY_STRTADR	Channel 2 Top Field luma buffer start address
0x01E1 70C4	CH2_BY_STRTADR	Channel 2 Bottom Field luma buffer start address
0x01E1 70C8	CH2_TC_STRTADR	Channel 2 Top Field chroma buffer start address
0x01E1 70CC	CH2_BC_STRTADR	Channel 2 Bottom Field chroma buffer start address
0x01E1 70D0	CH2_THA_STRTADR	Channel 2 Top Field horizontal ancillary data buffer start address
0x01E1 70D4	CH2_BHA_STRTADR	Channel 2 Bottom Field horizontal ancillary data buffer start address
0x01E1 70D8	CH2_TVA_STRTADR	Channel 2 Top Field vertical ancillary data buffer start address
0x01E1 70DC	CH2_BVA_STRTADR	Channel 2 Bottom Field vertical ancillary data buffer start address
0x01E1 70E0	CH2_SUBPIC_CFG	Channel 2 sub-picture configuration
0x01E1 70E4	CH2_IMG_ADD_OFST	Channel 2 image data address offset
0x01E1 70E8	CH2_HA_ADD_OFST	Channel 2 horizontal ancillary data address offset
0x01E1 70EC	CH2_HSIZE_CFG	Channel 2 horizontal data size configuration
0x01E1 70F0	CH2_VSIZE_CFG0	Channel 2 vertical data size configuration (0)
0x01E1 70F4	CH2_VSIZE_CFG1	Channel 2 vertical data size configuration (1)
0x01E1 70F8	CH2_VSIZE_CFG2	Channel 2 vertical data size configuration (2)
0x01E1 70FC	CH2_VSIZE	Channel 2 vertical image size
0x01E1 7100	CH2_THA_STRTPOS	Channel 2 Top Field horizontal ancillary data insertion start position
0x01E1 7104	CH2_THA_SIZE	Channel 2 Top Field horizontal ancillary data size
0x01E1 7108	CH2_BHA_STRTPOS	Channel 2 Bottom Field horizontal ancillary data insertion start position
0x01E1 710C	CH2_BHA_SIZE	Channel 2 Bottom Field horizontal ancillary data size
0x01E1 7110	CH2_TVA_STRTPOS	Channel 2 Top Field vertical ancillary data insertion start position
0x01E1 7114	CH2_TVA_SIZE	Channel 2 Top Field vertical ancillary data size
0x01E1 7118	CH2_BVA_STRTPOS	Channel 2 Bottom Field vertical ancillary data insertion start position
0x01E1 711C	CH2_BVA_SIZE	Channel 2 Bottom Field vertical ancillary data size
0x01E1 7120 - 0x01E1 713F	-	Reserved
DISPLAY CHANNEL 3 REGISTERS		
0x01E1 7140	CH3_TY_STRTADR	Channel 3 Field 0 luma buffer start address
0x01E1 7144	CH3_BY_STRTADR	Channel 3 Field 1 luma buffer start address
0x01E1 7148	CH3_TC_STRTADR	Channel 3 Field 0 chroma buffer start address
0x01E1 714C	CH3_BC_STRTADR	Channel 3 Field 1 chroma buffer start address
0x01E1 7150	CH3_THA_STRTADR	Channel 3 Field 0 horizontal ancillary data buffer start address
0x01E1 7154	CH3_BHA_STRTADR	Channel 3 Field 1 horizontal ancillary data buffer start address
0x01E1 7158	CH3_TVA_STRTADR	Channel 3 Field 0 vertical ancillary data buffer start address
0x01E1 715C	CH3_BVA_STRTADR	Channel 3 Field 1 vertical ancillary data buffer start address
0x01E1 7160	CH3_SUBPIC_CFG	Channel 3 sub-picture configuration
0x01E1 7164	CH3_IMG_ADD_OFST	Channel 3 image data address offset
0x01E1 7168	CH3_HA_ADD_OFST	Channel 3 horizontal ancillary data address offset
0x01E1 716C	CH3_HSIZE_CFG	Channel 3 horizontal data size configuration
0x01E1 7170	CH3_VSIZE_CFG0	Channel 3 vertical data size configuration (0)
0x01E1 7174	CH3_VSIZE_CFG1	Channel 3 vertical data size configuration (1)
0x01E1 7178	CH3_VSIZE_CFG2	Channel 3 vertical data size configuration (2)
0x01E1 717C	CH3_VSIZE	Channel 3 vertical image size

 Copyright © 2011–2013, Texas Instruments Incorporated

Table 5-120. Video Port Interface (VPIF) Registers (continued)

BYTE ADDRESS	ACRONYM	REGISTER DESCRIPTION
0x01E1 7180	CH3_THA_STRTPOS	Channel 3 Top Field horizontal ancillary data insertion start position
0x01E1 7184	CH3_THA_SIZE	Channel 3 Top Field horizontal ancillary data size
0x01E1 7188	CH3_BHA_STRTPOS	Channel 3 Bottom Field horizontal ancillary data insertion start position
0x01E1 718C	CH3_BHA_SIZE	Channel 3 Bottom Field horizontal ancillary data size
0x01E1 7190	CH3_TVA_STRTPOS	Channel 3 Top Field vertical ancillary data insertion start position
0x01E1 7194	CH3_TVA_SIZE	Channel 3 Top Field vertical ancillary data size
0x01E1 7198	CH3_BVA_STRTPOS	Channel 3 Bottom Field vertical ancillary data insertion start position
0x01E1 719C	CH3_BVA_SIZE	Channel 3 Bottom Field vertical ancillary data size
0x01E1 71A0 - 0x01E1 71FF	-	Reserved

Copyright © 2011–2013, Texas Instruments Incorporated

5.27.2 VPIF Electrical Data/Timing

Table 5-121. Timing Requirements for VPIF VP_CLKINx Inputs(1) (see Figure 5-75)

NO.	PARAMETER		1.3V, 1.2V		1.1V		1.0V		UNIT
			MIN	MAX	MIN	MAX	MIN	MAX	
1	$t_{c(VKI)}$	Cycle time, VP_CLKIN0	13.3		20		37		ns
		Cycle time, VP_CLKIN1/2/3	13.3		20		37		ns
2	$t_{w(VKIH)}$	Pulse duration, VP_CLKINx high	0.4C		0.4C		0.4C		ns
3	$t_{w(VKIL)}$	Pulse duration, VP_CLKINx low	0.4C		0.4C		0.4C		ns
4	$t_{t(VKI)}$	Transition time, VP_CLKINx		5		5		5	ns

(1) C = VP_CLKINx period in ns.

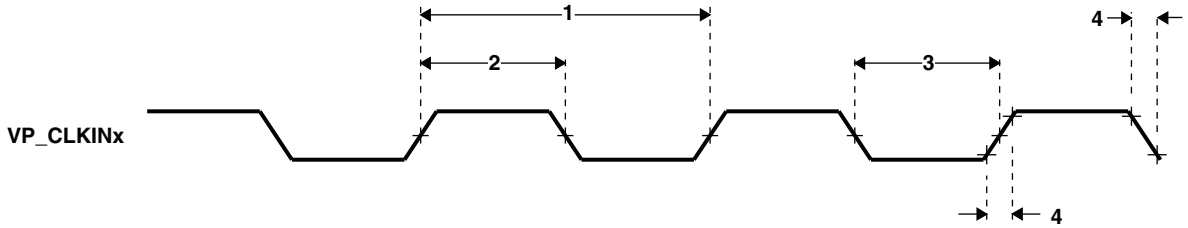

Figure 5-75. Video Port Capture VP_CLKINx Timing

Copyright © 2011–2013, Texas Instruments Incorporated

Table 5-122. Timing Requirements for VPIF Channels 0/1 Video Capture Data and Control Inputs (see Figure 5-76)

NO.	PARAMETER		1.3V, 1.2V		1.1V		1.0V		UNIT
			MIN	MAX	MIN	MAX	MIN	MAX	
1	$t_{su(VDINV-VKIH)}$	Setup time, VP_DINx valid before VP_CLKIN0/1 high	4		6		7		ns
2	$t_{h(VKIH-VDINV)}$	Hold time, VP_DINx valid after VP_CLKIN0/1 high	0		0		0		ns

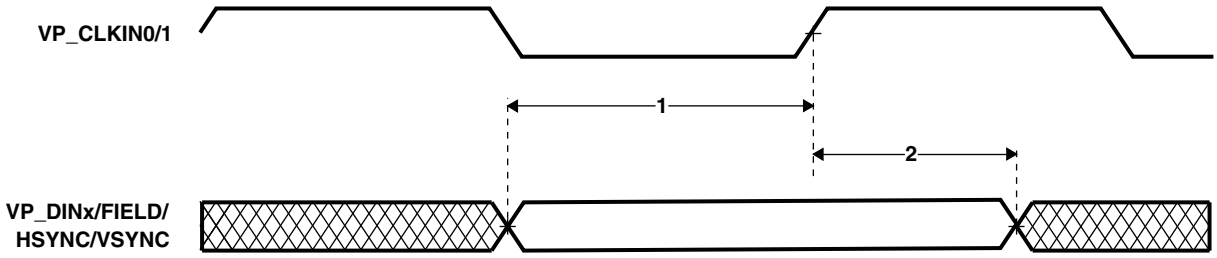

Figure 5-76. VPIF Channels 0/1 Video Capture Data and Control Input Timing

Table 5-123. Switching Characteristics Over Recommended Operating Conditions for Video Data Shown With Respect to VP_CLKOUT2/3 (1) (see Figure 5-77)

NO.	PARAMETER		1.3V, 1.2V		1.1V		1.0V		UNIT
			MIN	MAX	MIN	MAX	MIN	MAX	
1	$t_{c(VKO)}$	Cycle time, VP_CLKOUT2/3	13.3		20		37		ns
2	$t_{w(VKOH)}$	Pulse duration, VP_CLKOUT2/3 high	0.4C		0.4C		0.4C		ns
3	$t_{w(VKOL)}$	Pulse duration, VP_CLKOUT2/3 low	0.4C		0.4C		0.4C		ns
4	$t_{t(VKO)}$	Transition time, VP_CLKOUT2/3		5		5		5	ns
11	$t_{d(VKOH-VPDOUTV)}$	Delay time, VP_CLKOUT2/3 high to VP_DOUTx valid		8.5		12		17	ns
12	$t_{d(VCLKOH-VPDOUTIV)}$	Delay time, VP_CLKOUT2/3 high to VP_DOUTx invalid	1.5		1.5		1.5		ns

(1) C = VP_CLKO2/3 period in ns.

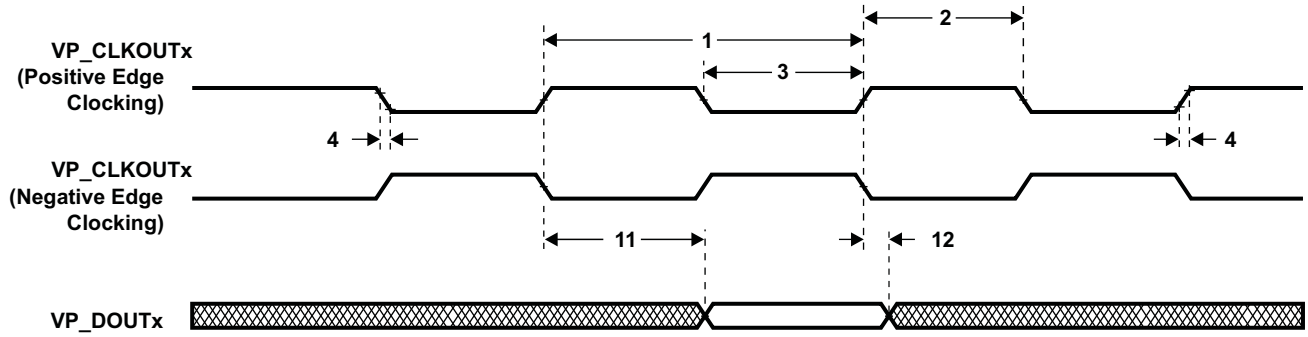

Figure 5-77. VPIF Channels 2/3 Video Display Data Output Timing With Respect to VP_CLKOUT2/3

5.28 Enhanced Capture (eCAP) Peripheral

The device contains up to three enhanced capture (eCAP) modules. Figure 5-78 shows a functional block diagram of a module.

Uses for ECAP include:

- Speed measurements of rotating machinery (e.g. toothed sprockets sensed via Hall sensors)
- Elapsed time measurements between position sensor triggers
- Period and duty cycle measurements of pulse train signals
- Decoding current or voltage amplitude derived from duty cycle encoded current/voltage sensors

The ECAP module described in this specification includes the following features:

- 32 bit time base
- 4 event time-stamp registers (each 32 bits)
- Edge polarity selection for up to 4 sequenced time-stamp capture events
- Interrupt on either of the 4 events
- Single shot capture of up to 4 event time-stamps
- Continuous mode capture of time-stamps in a 4 deep circular buffer
- Absolute time-stamp capture
- Difference mode time-stamp capture
- All the above resources are dedicated to a single input pin

The eCAP modules are clocked at the ASYNC3 clock domain rate.

 Copyright © 2011–2013, Texas Instruments Incorporated

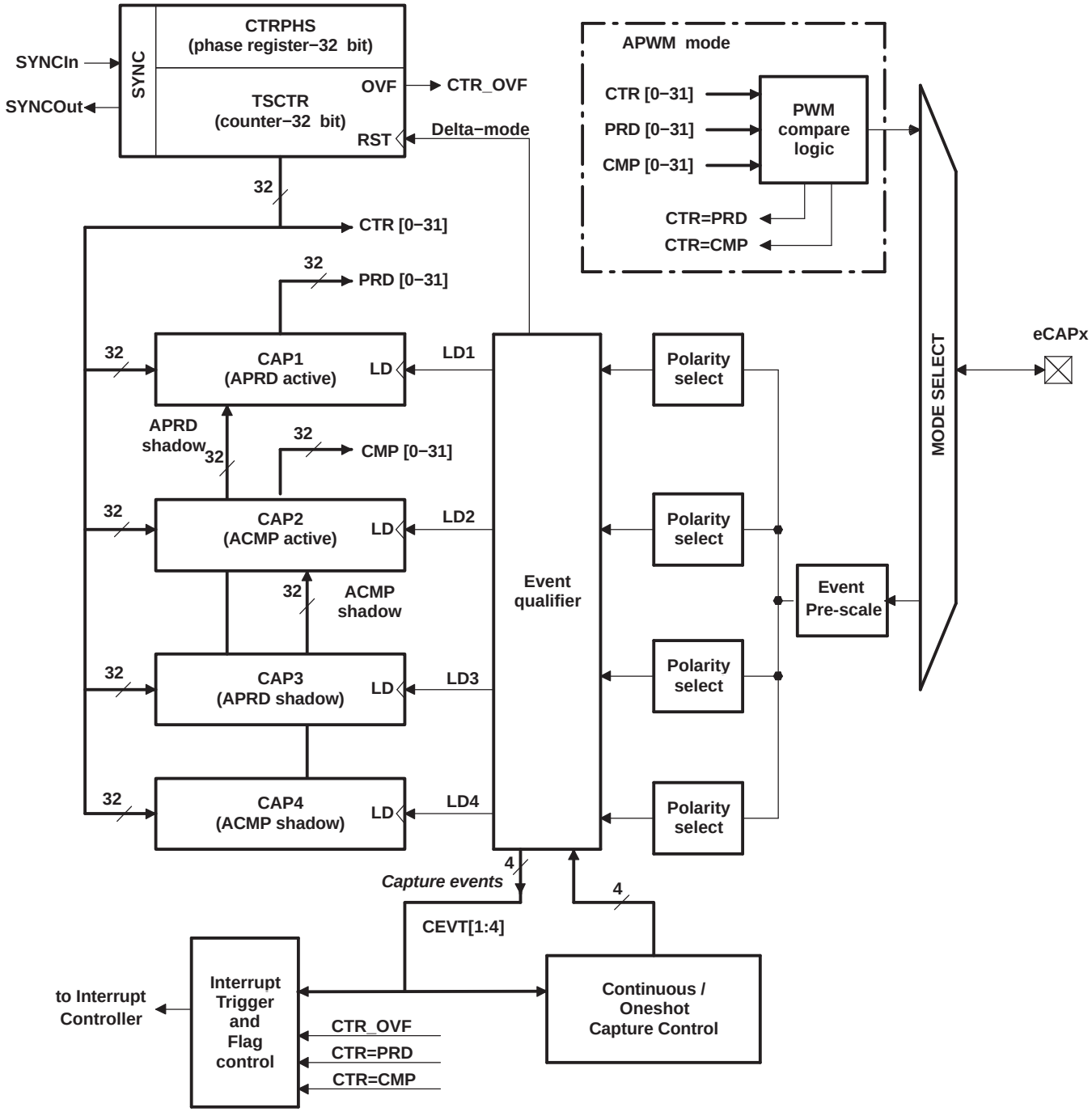

Figure 5-78. eCAP Functional Block Diagram

Table 5-124 is the list of the ECAP registers.

Table 5-124. ECAPx Configuration Registers

ECAP0 BYTE ADDRESS	ECAP1 BYTE ADDRESS	ECAP2 BYTE ADDRESS	ACRONYM	DESCRIPTION
0x01F0 6000	0x01F0 7000	0x01F0 8000	TSCTR	Time-Stamp Counter
0x01F0 6004	0x01F0 7004	0x01F0 8004	CTRPHS	Counter Phase Offset Value Register
0x01F0 6008	0x01F0 7008	0x01F0 8008	CAP1	Capture 1 Register
0x01F0 600C	0x01F0 700C	0x01F0 800C	CAP2	Capture 2 Register
0x01F0 6010	0x01F0 7010	0x01F0 8010	CAP3	Capture 3 Register
0x01F0 6014	0x01F0 7014	0x01F0 8014	CAP4	Capture 4 Register
0x01F0 6028	0x01F0 7028	0x01F0 8028	ECCTL1	Capture Control Register 1
0x01F0 602A	0x01F0 702A	0x01F0 802A	ECCTL2	Capture Control Register 2
0x01F0 602C	0x01F0 702C	0x01F0 802C	ECEINT	Capture Interrupt Enable Register
0x01F0 602E	0x01F0 702E	0x01F0 802E	ECFLG	Capture Interrupt Flag Register
0x01F0 6030	0x01F0 7030	0x01F0 8030	ECCLR	Capture Interrupt Clear Register
0x01F0 6032	0x01F0 7032	0x01F0 8032	ECFRC	Capture Interrupt Force Register
0x01F0 605C	0x01F0 705C	0x01F0 805C	REVID	Revision ID

Table 5-125 shows the eCAP timing requirement and Table 5-126 shows the eCAP switching characteristics.

Table 5-125. Timing Requirements for Enhanced Capture (eCAP)

PARAMETER		TEST CONDITIONS	1.3V, 1.2V, 1.1V, 1.0V		UNIT
			MIN	MAX	
$t_{w(CAP)}$	Capture input pulse width	Asynchronous	$2t_{c(SCO)}$		cycles
		Synchronous	$2t_{c(SCO)}$		cycles

Table 5-126. Switching Characteristics Over Recommended Operating Conditions for eCAP

PARAMETER		1.3V, 1.2V		1.1V		1.0V		UNIT
		MIN	MAX	MIN	MAX	MIN	MAX	
$t_{w(APWM)}$	Pulse duration, APWMx output high/low	20		20		20		ns

Copyright © 2011–2013, Texas Instruments Incorporated

5.29 Enhanced High-Resolution Pulse-Width Modulator (eHRPWM)

The device contains two enhanced PWM Modules (eHRPWM). Figure 5-79 shows a block diagram of multiple eHRPWM modules. Figure 4-4 shows the signal interconnections with the eHRPWM.

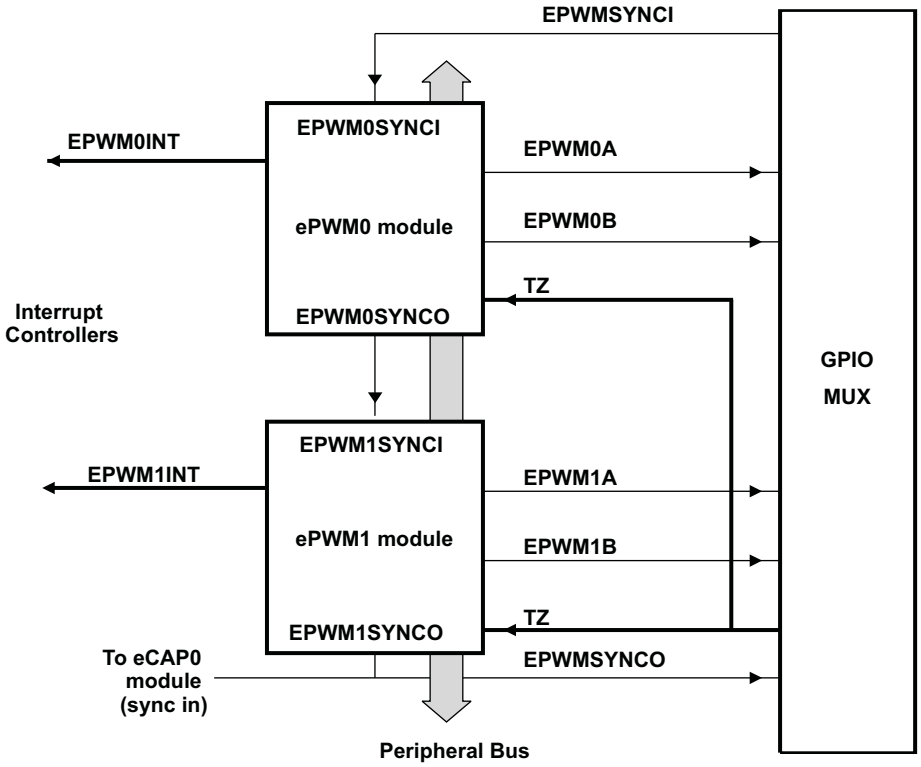

Figure 5-79. Multiple PWM Modules in a SMOMAPL138B System

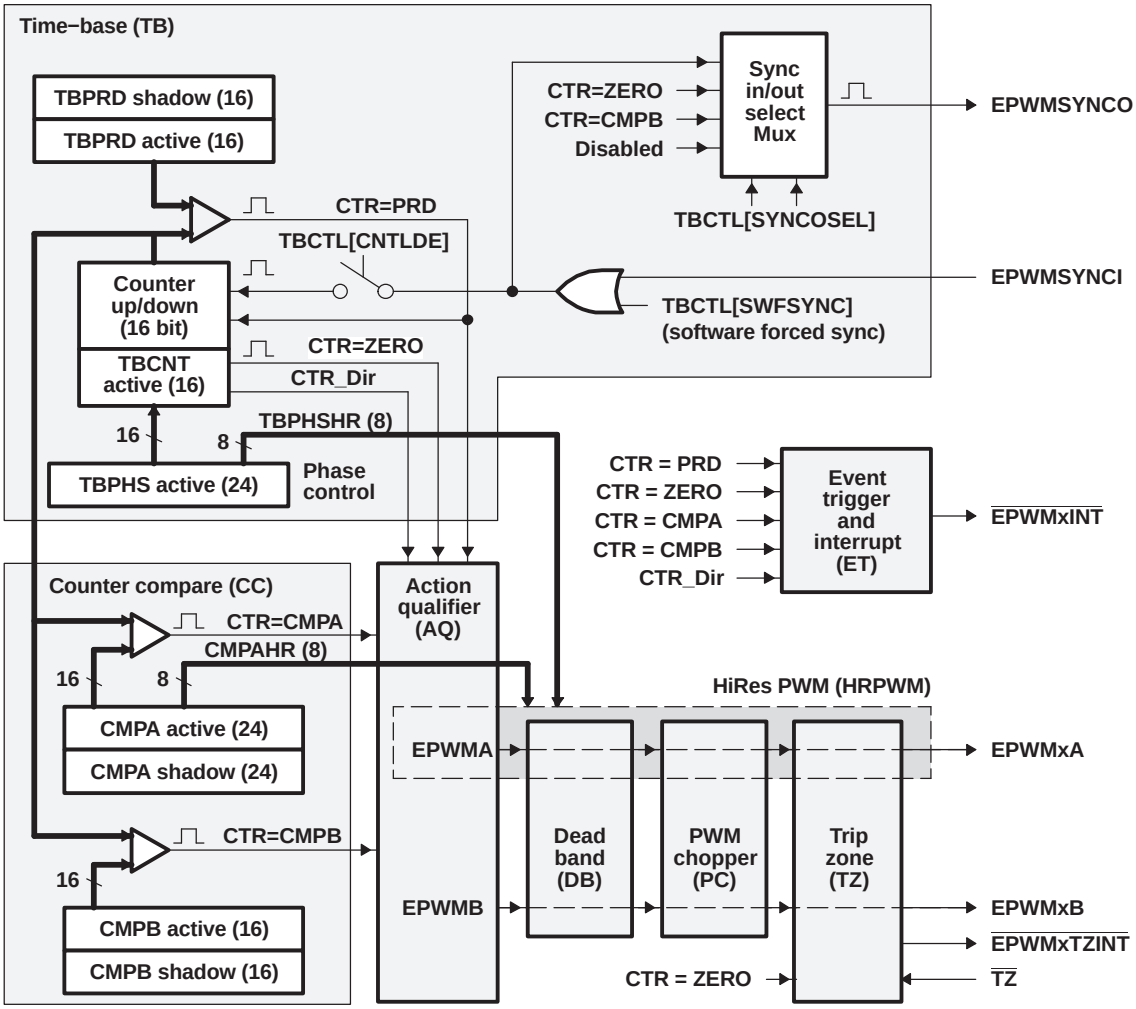

Figure 5-80. eHRPWM Sub-Modules Showing Critical Internal Signal Interconnections

Copyright © 2011–2013, Texas Instruments Incorporated

Table 5-127. eHRPWM Module Control and Status Registers Grouped by Submodule

eHRPWM0 BYTE ADDRESS	eHRPWM1 BYTE ADDRESS	ACRONYM	SHADOW	REGISTER DESCRIPTION
Time-Base Submodule Registers				
0x01F0 0000	0x01F0 2000	TBCTL	No	Time-Base Control Register
0x01F0 0002	0x01F0 2002	TBSTS	No	Time-Base Status Register
0x01F0 0004	0x01F0 2004	TBPHSHR	No	Extension for HRPWM Phase Register (1)
0x01F0 0006	0x01F0 2006	TBPHS	No	Time-Base Phase Register
0x01F0 0008	0x01F0 2008	TBCNT	No	Time-Base Counter Register
0x01F0 000A	0x01F0 200A	TBPRD	Yes	Time-Base Period Register
Counter-Compare Submodule Registers				
0x01F0 000E	0x01F0 200E	CMPCTL	No	Counter-Compare Control Register
0x01F0 0010	0x01F0 2010	CMPAHR	No	Extension for HRPWM Counter-Compare A Register (1)
0x01F0 0012	0x01F0 2012	CMPA	Yes	Counter-Compare A Register
0x01F0 0014	0x01F0 2014	CMPB	Yes	Counter-Compare B Register
Action-Qualifier Submodule Registers				
0x01F0 0016	0x01F0 2016	AQCTLA	No	Action-Qualifier Control Register for Output A (eHRPWMxA)
0x01F0 0018	0x01F0 2018	AQCTLB	No	Action-Qualifier Control Register for Output B (eHRPWMxB)
0x01F0 001A	0x01F0 201A	AQSFRC	No	Action-Qualifier Software Force Register
0x01F0 001C	0x01F0 201C	AQCSFRC	Yes	Action-Qualifier Continuous S/W Force Register Set
Dead-Band Generator Submodule Registers				
0x01F0 001E	0x01F0 201E	DBCTL	No	Dead-Band Generator Control Register
0x01F0 0020	0x01F0 2020	DBRED	No	Dead-Band Generator Rising Edge Delay Count Register
0x01F0 0022	0x01F0 2022	DBFED	No	Dead-Band Generator Falling Edge Delay Count Register
PWM-Chopper Submodule Registers				
0x01F0 003C	0x01F0 203C	PCCTL	No	PWM-Chopper Control Register
Trip-Zone Submodule Registers				
0x01F0 0024	0x01F0 2024	TZSEL	No	Trip-Zone Select Register
0x01F0 0028	0x01F0 2028	TZCTL	No	Trip-Zone Control Register
0x01F0 002A	0x01F0 202A	TZEINT	No	Trip-Zone Enable Interrupt Register
0x01F0 002C	0x01F0 202C	TZFLG	No	Trip-Zone Flag Register
0x01F0 002E	0x01F0 202E	TZCLR	No	Trip-Zone Clear Register
0x01F0 0030	0x01F0 2030	TZFRC	No	Trip-Zone Force Register
Event-Trigger Submodule Registers				
0x01F0 0032	0x01F0 2032	ETSEL	No	Event-Trigger Selection Register
0x01F0 0034	0x01F0 2034	ETPS	No	Event-Trigger Pre-Scale Register
0x01F0 0036	0x01F0 2036	ETFLG	No	Event-Trigger Flag Register
0x01F0 0038	0x01F0 2038	ETCLR	No	Event-Trigger Clear Register
0x01F0 003A	0x01F0 203A	ETFRC	No	Event-Trigger Force Register
High-Resolution PWM (HRPWM) Submodule Registers				
0x01F0 1020	0x01F0 3020	HRCNFG	No	HRPWM Configuration Register (1)

(1) These registers are only available on eHRPWM instances that include the high-resolution PWM (HRPWM) extension; otherwise, these locations are reserved.

5.29.1 Enhanced Pulse Width Modulator (eHRPWM) Timing

PWM refers to PWM outputs on eHRPWM1-6. Table 5-128 shows the PWM timing requirements and Table 5-129, switching characteristics.

Table 5-128. Timing Requirements for eHRPWM

PARAMETER		TEST CONDITIONS	1.3V, 1.2V, 1.1V, 1.0V		UNIT
			MIN	MAX	
$t_{w(SYNCIN)}$	Sync input pulse width	Asynchronous	$2t_{c(SCO)}$		cycles
		Synchronous	$2t_{c(SCO)}$		cycles

Table 5-129. Switching Characteristics Over Recommended Operating Conditions for eHRPWM

PARAMETER		TEST CONDITIONS	1.3V, 1.2V		1.1V		1.0V		UNIT
			MIN	MAX	MIN	MAX	MIN	MAX	
$t_{w(PWM)}$	Pulse duration, PWMx output high/low		20		20		26.6		ns
$t_{w(SYNCOUT)}$	Sync output pulse width		$8t_{c(SCO)}$		$8t_{c(SCO)}$		$8t_{c(SCO)}$		cycles
$t_{d(PWM)TZA}$	Delay time, trip input active to PWM forced high Delay time, trip input active to PWM forced low	no pin load; no additional programmable delay		25		25		25	ns
$t_{d(TZ-PWM)HZ}$	Delay time, trip input active to PWM Hi-Z	no additional programmable delay		20		20		20	ns

Copyright © 2011–2013, Texas Instruments Incorporated

5.29.2 Trip-Zone Input Timing

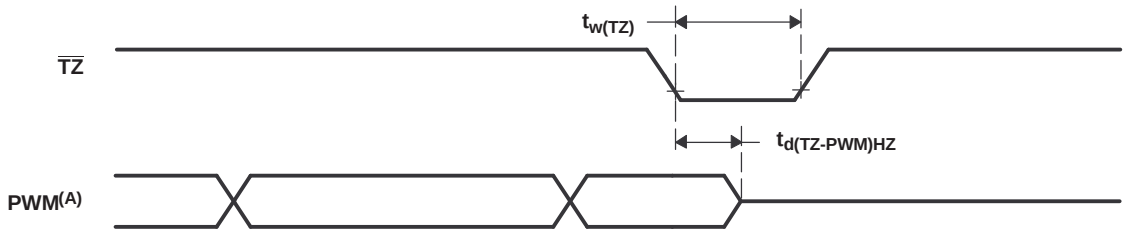

A. PWM refers to all the PWM pins in the device. The state of the PWM pins after $\overline{TZ}$ is taken high depends on the PWM recovery software.

Figure 5-81. PWM Hi-Z Characteristics

Table 5-130. Trip-Zone input Timing Requirements

PARAMETER		TEST CONDITIONS	1.3V, 1.2V, 1.1V, 1.0V		UNIT
			MIN	MAX	
$t_{w(TZ)}$	Pulse duration, $\overline{TZ}$x input low	Asynchronous	$1t_{c(SCO)}$		cycles
		Synchronous	$2t_{c(SCO)}$		cycles

Table 5-131 shows the high-resolution PWM switching characteristics.

Table 5-131. High Resolution PWM Characteristics at SYSCLKOUT = (60 - 100 MHz)

PARAMETER	1.3V, 1.2V			1.1V			1.0V			UNIT
	MIN	TYP	MAX	MIN	TYP	MAX	MIN	TYP	MAX	
Micro Edge Positioning (MEP) step size(1)		200			200			200		ps

(1) MEP step size will increase with low voltage and high temperature and decrease with high voltage and cold temperature.

5.30 Timers

The timers support the following features:

- Configurable as single 64-bit timer or two 32-bit timers
- Period timeouts generate interrupts, DMA events or external pin events
- 8 32-bit compare registers
- Compare matches generate interrupt events
- Capture capability
- 64-bit Watchdog capability (Timer64P1 only)

Table 5-132 lists the timer registers.

Table 5-132. Timer Registers

TIMER64P 0 BYTE ADDRESS	TIMER64P 1 BYTE ADDRESS	TIMER64P 2 BYTE ADDRESS	TIMER64P 3 BYTE ADDRESS	ACRONYM	REGISTER DESCRIPTION
0x01C2 0000	0x01C2 1000	0x01F0 C000	0x01F0 D000	REV	Revision Register
0x01C2 0004	0x01C2 1004	0x01F0 C004	0x01F0 D004	EMUMGT	Emulation Management Register
0x01C2 0008	0x01C2 1008	0x01F0 C008	0x01F0 D008	GPINTGPEN	GPIO Interrupt and GPIO Enable Register
0x01C2 000C	0x01C2 100C	0x01F0 C00C	0x01F0 D00C	GPDATGPDIR	GPIO Data and GPIO Direction Register
0x01C2 0010	0x01C2 1010	0x01F0 C010	0x01F0 D010	TIM12	Timer Counter Register 12
0x01C2 0014	0x01C2 1014	0x01F0 C014	0x01F0 D014	TIM34	Timer Counter Register 34
0x01C2 0018	0x01C2 1018	0x01F0 C018	0x01F0 D018	PRD12	Timer Period Register 12
0x01C2 001C	0x01C2 101C	0x01F0 C01C	0x01F0 D01C	PRD34	Timer Period Register 34
0x01C2 0020	0x01C2 1020	0x01F0 C020	0x01F0 D020	TCR	Timer Control Register
0x01C2 0024	0x01C2 1024	0x01F0 C024	0x01F0 D024	TGCR	Timer Global Control Register
0x01C2 0028	0x01C2 1028	0x01F0 C028	0x01F0 D028	WDTCR	Watchdog Timer Control Register
0x01C2 0034	0x01C2 1034	0x01F0 C034	0x01F0 D034	REL12	Timer Reload Register 12
0x01C2 0038	0x01C2 1038	0x01F0 C038	0x01F0 D038	REL34	Timer Reload Register 34
0x01C2 003C	0x01C2 103C	0x01F0 C03C	0x01F0 D03C	CAP12	Timer Capture Register 12
0x01C2 0040	0x01C2 1040	0x01F0 C040	0x01F0 D040	CAP34	Timer Capture Register 34
0x01C2 0044	0x01C2 1044	0x01F0 C044	0x01F0 D044	INTCTLSTAT	Timer Interrupt Control and Status Register
0x01C2 0060	0x01C2 1060	0x01F0 C060	0x01F0 D060	CMP0	Compare Register 0
0x01C2 0064	0x01C2 1064	0x01F0 C064	0x01F0 D064	CMP1	Compare Register 1
0x01C2 0068	0x01C2 1068	0x01F0 C068	0x01F0 D068	CMP2	Compare Register 2
0x01C2 006C	0x01C2 106C	0x01F0 C06C	0x01F0 D06C	CMP3	Compare Register 3
0x01C2 0070	0x01C2 1070	0x01F0 C070	0x01F0 D070	CMP4	Compare Register 4
0x01C2 0074	0x01C2 1074	0x01F0 C074	0x01F0 D074	CMP5	Compare Register 5
0x01C2 0078	0x01C2 1078	0x01F0 C078	0x01F0 D078	CMP6	Compare Register 6
0x01C2 007C	0x01C2 107C	0x01F0 C07C	0x01F0 D07C	CMP7	Compare Register 7

Copyright © 2011–2013, Texas Instruments Incorporated

5.30.1 Timer Electrical Data/Timing

Table 5-133. Timing Requirements for Timer Input(1) (2) (see Figure 5-82)

NO.	PARAMETER		1.3V, 1.2V, 1.1V, 1.0V		UNIT
			MIN	MAX	
1	$t_{c(TM64Px_IN12)}$	Cycle time, TM64Px_IN12	4P		ns
2	$t_{w(TINPH)}$	Pulse duration, TM64Px_IN12 high	0.45C	0.55C	ns
3	$t_{w(TINPL)}$	Pulse duration, TM64Px_IN12 low	0.45C	0.55C	ns
4	$t_{t(TM64Px_IN12)}$	Transition time, TM64Px_IN12		0.25P or 10 (3)	ns

(1) P = OSCIN cycle time in ns.
(2) C = TM64P0_IN12 cycle time in ns.
(3) Whichever is smaller. P = the period of the applied signal. Maintaining transition times as fast as possible is recommended to improve noise immunity on input signals.

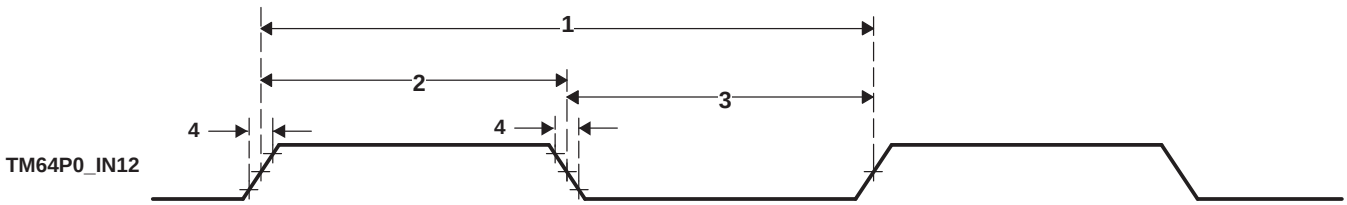

Figure 5-82. Timer Timing

Table 5-134. Switching Characteristics Over Recommended Operating Conditions for Timer Output (1)

NO.	PARAMETER		1.3V, 1.2V, 1.1V, 1.0V		UNIT
			MIN	MAX	
5	$t_{w(TOUTH)}$	Pulse duration, TM64P0_OUT12 high	4P		ns
6	$t_{w(TOUTL)}$	Pulse duration, TM64P0_OUT12 low	4P		ns

(1) P = OSCIN cycle time in ns. For example, when OSCIN frequency is 27 MHz, use P = 37.0$\overline{37}$ ns.

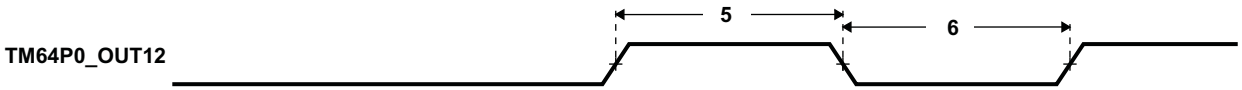

Figure 5-83. Timer Timing

5.31 Real Time Clock (RTC)

The RTC provides a time reference to an application running on the device. The current date and time is tracked in a set of counter registers that update once per second. The time can be represented in 12-hour or 24-hour mode. The calendar and time registers are buffered during reads and writes so that updates do not interfere with the accuracy of the time and date.

Alarms are available to interrupt the CPU at a particular time, or at periodic time intervals, such as once per minute or once per day. In addition, the RTC can interrupt the CPU every time the calendar and time registers are updated, or at programmable periodic intervals.

The real-time clock (RTC) provides the following features:

- 100-year calendar (xx00 to xx99)
- Counts seconds, minutes, hours, day of the week, date, month, and year with leap year compensation
- Binary-coded-decimal (BCD) representation of time, calendar, and alarm
- 12-hour clock mode (with AM and PM) or 24-hour clock mode
- Alarm interrupt
- Periodic interrupt
- Single interrupt to the CPU
- Supports external 32.768-kHz crystal or external clock source of the same frequency
- Separate isolated power supply

Figure 5-84 shows a block diagram of the RTC.

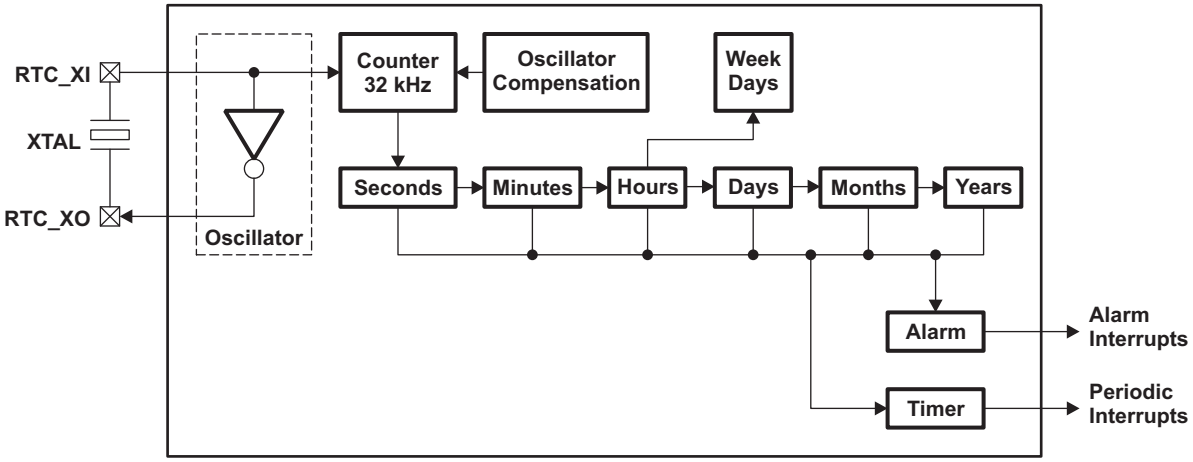

Figure 5-84. Real-Time Clock Block Diagram

Copyright © 2011–2013, Texas Instruments Incorporated

5.31.1 Clock Source

The clock reference for the RTC is an external 32.768-kHz crystal or an external clock source of the same frequency. The RTC also has a separate power supply that is isolated from the rest of the system. When the CPU and other peripherals are without power, the RTC can remain powered to preserve the current time and calendar information. Even if the RTC is not used, it must remain powered when the rest of the device is powered.

The source for the RTC reference clock may be provided by a crystal or by an external clock source. The RTC has an internal oscillator buffer to support direct operation with a crystal. The crystal is connected between pins RTC_XI and RTC_XO. RTC_XI is the input to the on-chip oscillator and RTC_XO is the output from the oscillator back to the crystal.

An external 32.768-kHz clock source may be used instead of a crystal. In such a case, the clock source is connected to RTC_XI, and RTC_XO is left unconnected.

If the RTC is not used, the RTC_XI pin should be held either low or high, RTC_XO should be left unconnected, RTC_CVDD should be connected to the device CVDD and RTC_VSS should remain grounded.

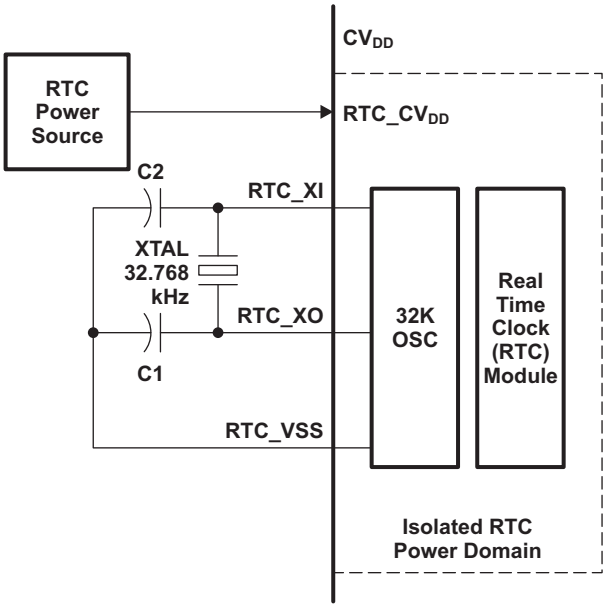

Figure 5-85. Clock Source

5.31.2 Real-Time Clock Register Descriptions

Table 5-135. Real-Time Clock (RTC) Registers

BYTE ADDRESS	ACRONYM	REGISTER DESCRIPTION
0x01C2 3000	SECOND	Seconds Register
0x01C2 3004	MINUTE	Minutes Register
0x01C2 3008	HOUR	Hours Register
0x01C2 300C	DAY	Day of the Month Register
0x01C2 3010	MONTH	Month Register
0x01C2 3014	YEAR	Year Register
0x01C2 3018	DOTW	Day of the Week Register
0x01C2 3020	ALARMSECOND	Alarm Seconds Register
0x01C2 3024	ALARMMINUTE	Alarm Minutes Register
0x01C2 3028	ALARMHOUR	Alarm Hours Register
0x01C2 302C	ALARMDAY	Alarm Days Register
0x01C2 3030	ALARMMONTH	Alarm Months Register
0x01C2 3034	ALARMYEAR	Alarm Years Register
0x01C2 3040	CTRL	Control Register
0x01C2 3044	STATUS	Status Register
0x01C2 3048	INTERRUPT	Interrupt Enable Register
0x01C2 304C	COMPLSB	Compensation (LSB) Register
0x01C2 3050	COMPMSB	Compensation (MSB) Register
0x01C2 3054	OSC	Oscillator Register
0x01C2 3060	SCRATCH0	Scratch 0 (General-Purpose) Register
0x01C2 3064	SCRATCH1	Scratch 1 (General-Purpose) Register
0x01C2 3068	SCRATCH2	Scratch 2 (General-Purpose) Register
0x01C2 306C	KICK0	Kick 0 (Write Protect) Register
0x01C2 3070	KICK1	Kick 1 (Write Protect) Register

Copyright © 2011–2013, Texas Instruments Incorporated

5.32 General-Purpose Input/Output (GPIO)

The GPIO peripheral provides general-purpose pins that can be configured as either inputs or outputs. When configured as an output, a write to an internal register can control the state driven on the output pin. When configured as an input, the state of the input is detectable by reading the state of an internal register. In addition, the GPIO peripheral can produce CPU interrupts and EDMA events in different interrupt/event generation modes. The GPIO peripheral provides generic connections to external devices. The GPIO pins are grouped into banks of 16 pins per bank (i.e., bank 0 consists of GPIO [0:15]).

The device GPIO peripheral supports the following:

- Up to 144 Pins configurable as GPIO
- External Interrupt and DMA request Capability
  - Every GPIO pin may be configured to generate an interrupt request on detection of rising and/or falling edges on the pin.
  - The interrupt requests within each bank are combined (logical or) to create eight unique bank level interrupt requests.
  - The bank level interrupt service routine may poll the INTSTATx register for its bank to determine which pin(s) have triggered the interrupt.
  - GPIO Banks 0, 1, 2, 3, 4, 5, 6, 7 and 8 Interrupts assigned to ARM INTC Interrupt Requests 42, 43, 44, 45, 46, 47, 48, 49 and 50 respectively
  - GPIO Banks 0, 1, 2, 3, 4, 5, 6, 7 and 8 Interrupts assigned to DSP Events 65, 41, 49, 52, 54, 59, 62, 72 and 75 respectively
  - GPIO Banks 0, 1, 2, 3, 4, and 5 are assigned to EDMA events 6, 7, 22, 23, 28, 29, and 29 respectively on Channel Controller 0 and GPIO Banks 6, 7, and 8 are assigned to EDMA events 16, 17, and 18 respectively on Channel Controller 1.
- Set/clear functionality: Firmware writes 1 to corresponding bit position(s) to set or to clear GPIO signal(s). This allows multiple firmware processes to toggle GPIO output signals without critical section protection (disable interrupts, program GPIO, re-enable interrupts, to prevent context switching to anther process during GPIO programming).
- Separate Input/Output registers
- Output register in addition to set/clear so that, if preferred by firmware, some GPIO output signals can be toggled by direct write to the output register(s).
- Output register, when read, reflects output drive status. This, in addition to the input register reflecting pin status and open-drain I/O cell, allows wired logic be implemented.

The memory map for the GPIO registers is shown in Table 5-136.

5.32.1 GPIO Register Description(s)

Table 5-136. GPIO Registers

BYTE ADDRESS	ACRONYM	REGISTER DESCRIPTION
0x01E2 6000	REV	Peripheral Revision Register
0x01E2 6004	RESERVED	Reserved
0x01E2 6008	BINTEN	GPIO Interrupt Per-Bank Enable Register
GPIO Banks 0 and 1		
0x01E2 6010	DIR01	GPIO Banks 0 and 1 Direction Register
0x01E2 6014	OUT_DATA01	GPIO Banks 0 and 1 Output Data Register
0x01E2 6018	SET_DATA01	GPIO Banks 0 and 1 Set Data Register
0x01E2 601C	CLR_DATA01	GPIO Banks 0 and 1 Clear Data Register
0x01E2 6020	IN_DATA01	GPIO Banks 0 and 1 Input Data Register
0x01E2 6024	SET_RIS_TRIG01	GPIO Banks 0 and 1 Set Rising Edge Interrupt Register
0x01E2 6028	CLR_RIS_TRIG01	GPIO Banks 0 and 1 Clear Rising Edge Interrupt Register
0x01E2 602C	SET_FAL_TRIG01	GPIO Banks 0 and 1 Set Falling Edge Interrupt Register
0x01E2 6030	CLR_FAL_TRIG01	GPIO Banks 0 and 1 Clear Falling Edge Interrupt Register
0x01E2 6034	INTSTAT01	GPIO Banks 0 and 1 Interrupt Status Register
GPIO Banks 2 and 3		
0x01E2 6038	DIR23	GPIO Banks 2 and 3 Direction Register
0x01E2 603C	OUT_DATA23	GPIO Banks 2 and 3 Output Data Register
0x01E2 6040	SET_DATA23	GPIO Banks 2 and 3 Set Data Register
0x01E2 6044	CLR_DATA23	GPIO Banks 2 and 3 Clear Data Register
0x01E2 6048	IN_DATA23	GPIO Banks 2 and 3 Input Data Register
0x01E2 604C	SET_RIS_TRIG23	GPIO Banks 2 and 3 Set Rising Edge Interrupt Register
0x01E2 6050	CLR_RIS_TRIG23	GPIO Banks 2 and 3 Clear Rising Edge Interrupt Register
0x01E2 6054	SET_FAL_TRIG23	GPIO Banks 2 and 3 Set Falling Edge Interrupt Register
0x01E2 6058	CLR_FAL_TRIG23	GPIO Banks 2 and 3 Clear Falling Edge Interrupt Register
0x01E2 605C	INTSTAT23	GPIO Banks 2 and 3 Interrupt Status Register
GPIO Banks 4 and 5		
0x01E2 6060	DIR45	GPIO Banks 4 and 5 Direction Register
0x01E2 6064	OUT_DATA45	GPIO Banks 4 and 5 Output Data Register
0x01E2 6068	SET_DATA45	GPIO Banks 4 and 5 Set Data Register
0x01E2 606C	CLR_DATA45	GPIO Banks 4 and 5 Clear Data Register
0x01E2 6070	IN_DATA45	GPIO Banks 4 and 5 Input Data Register
0x01E2 6074	SET_RIS_TRIG45	GPIO Banks 4 and 5 Set Rising Edge Interrupt Register
0x01E2 6078	CLR_RIS_TRIG45	GPIO Banks 4 and 5 Clear Rising Edge Interrupt Register
0x01E2 607C	SET_FAL_TRIG45	GPIO Banks 4 and 5 Set Falling Edge Interrupt Register
0x01E2 6080	CLR_FAL_TRIG45	GPIO Banks 4 and 5 Clear Falling Edge Interrupt Register
0x01E2 6084	INTSTAT45	GPIO Banks 4 and 5 Interrupt Status Register

Copyright © 2011–2013, Texas Instruments Incorporated

Table 5-136. GPIO Registers (continued)

BYTE ADDRESS	ACRONYM	REGISTER DESCRIPTION
GPIO Banks 6 and 7		
0x01E2 6088	DIR67	GPIO Banks 6 and 7 Direction Register
0x01E2 608C	OUT_DATA67	GPIO Banks 6 and 7 Output Data Register
0x01E2 6090	SET_DATA67	GPIO Banks 6 and 7 Set Data Register
0x01E2 6094	CLR_DATA67	GPIO Banks 6 and 7 Clear Data Register
0x01E2 6098	IN_DATA67	GPIO Banks 6 and 7 Input Data Register
0x01E2 609C	SET_RIS_TRIG67	GPIO Banks 6 and 7 Set Rising Edge Interrupt Register
0x01E2 60A0	CLR_RIS_TRIG67	GPIO Banks 6 and 7 Clear Rising Edge Interrupt Register
0x01E2 60A4	SET_FAL_TRIG67	GPIO Banks 6 and 7 Set Falling Edge Interrupt Register
0x01E2 60A8	CLR_FAL_TRIG67	GPIO Banks 6 and 7 Clear Falling Edge Interrupt Register
0x01E2 60AC	INTSTAT67	GPIO Banks 6 and 7 Interrupt Status Register
GPIO Bank 8		
0x01E2 60B0	DIR8	GPIO Bank 8 Direction Register
0x01E2 60B4	OUT_DATA8	GPIO Bank 8 Output Data Register
0x01E2 60B8	SET_DATA8	GPIO Bank 8 Set Data Register
0x01E2 60BC	CLR_DATA8	GPIO Bank 8 Clear Data Register
0x01E2 60C0	IN_DATA8	GPIO Bank 8 Input Data Register
0x01E2 60C4	SET_RIS_TRIG8	GPIO Bank 8 Set Rising Edge Interrupt Register
0x01E2 60C8	CLR_RIS_TRIG8	GPIO Bank 8 Clear Rising Edge Interrupt Register
0x01E2 60CC	SET_FAL_TRIG8	GPIO Bank 8 Set Falling Edge Interrupt Register
0x01E2 60D0	CLR_FAL_TRIG8	GPIO Bank 8 Clear Falling Edge Interrupt Register
0x01E2 60D4	INTSTAT8	GPIO Bank 8 Interrupt Status Register

Copyright © 2011–2013, Texas Instruments Incorporated

5.32.2 GPIO Peripheral Input/Output Electrical Data/Timing

Table 5-137. Timing Requirements for GPIO Inputs(1) (see Figure 5-86)

NO.	PARAMETER		1.3V, 1.2V, 1.1V, 1.0V		UNIT
			MIN	MAX	
1	$t_{w(GPIH)}$	Pulse duration, GP*n*[*m*] as input high	2C(1) (2)		ns
2	$t_{w(GPIL)}$	Pulse duration, GP*n*[*m*] as input low	2C(1) (2)		ns

(1) The pulse width given is sufficient to generate a CPU interrupt or an EDMA event. However, if a user wants to have the device recognize the GPIx changes through software polling of the GPIO register, the GPIx duration must be extended to allow the device enough time to access the GPIO register through the internal bus.
(2) C=SYSCLK4 period in ns.

Table 5-138. Switching Characteristics Over Recommended Operating Conditions for GPIO Outputs (see Figure 5-86)

NO.	PARAMETER		1.3V, 1.2V, 1.1V, 1.0V		UNIT
			MIN	MAX	
3	$t_{w(GPOH)}$	Pulse duration, GP*n*[*m*] as output high	2C(1) (2)		ns
4	$t_{w(GPOL)}$	Pulse duration, GP*n*[*m*] as output low	2C(1) (2)		ns

(1) This parameter value should not be used as a maximum performance specification. Actual performance of back-to-back accesses of the GPIO is dependent upon internal bus activity.
(2) C=SYSCLK4 period in ns.

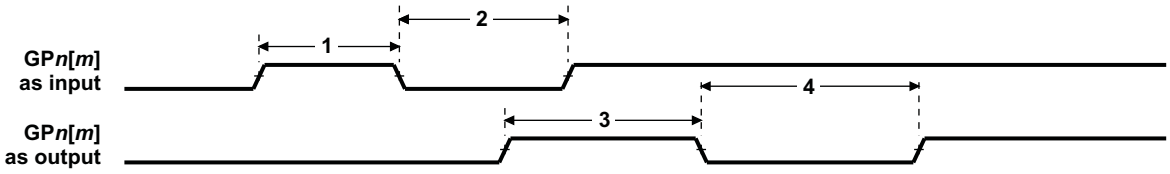

Figure 5-86. GPIO Port Timing

5.32.3 GPIO Peripheral External Interrupts Electrical Data/Timing

Table 5-139. Timing Requirements for External Interrupts(1) (see Figure 5-87)

NO.	PARAMETER		1.3V, 1.2V, 1.1V, 1.0V		UNIT
			MIN	MAX	
1	$t_{w(ILOW)}$	Width of the external interrupt pulse low	2C(1) (2)		ns
2	$t_{w(IHIGH)}$	Width of the external interrupt pulse high	2C(1) (2)		ns

(1) The pulse width given is sufficient to generate an interrupt or an EDMA event. However, if a user wants to have the device recognize the GPIO changes through software polling of the GPIO register, the GPIO duration must be extended to allow the device enough time to access the GPIO register through the internal bus.
(2) C=SYSCLK4 period in ns.

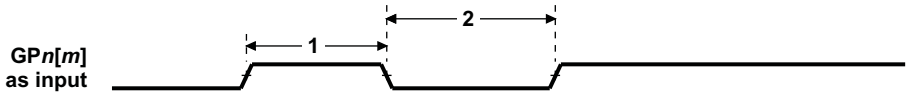

Figure 5-87. GPIO External Interrupt Timing

Copyright © 2011–2013, Texas Instruments Incorporated

5.33 Programmable Real-Time Unit Subsystem (PRUSS)

The Programmable Real-Time Unit Subsystem (PRUSS) consists of

- Two Programmable Real-Time Units (PRU0 and PRU1) and their associated memories
- An Interrupt Controller (INTC) for handling system interrupt events. The INTC also supports posting events back to the device level host CPU.
- A Switched Central Resource (SCR) for connecting the various internal and external masters to the resources inside the PRUSS.

The two PRUs can operate completely independently or in coordination with each other. The PRUs can also work in coordination with the device level host CPU. This is determined by the nature of the program which is loaded into the PRUs instruction memory. Several different signaling mechanisms are available between the two PRUs and the device level host CPU.

The PRUs are optimized for performing embedded tasks that require manipulation of packed memory mapped data structures, handling of system events that have tight realtime constraints and interfacing with systems external to the device.

The PRUSS comprises various distinct addressable regions. Externally the subsystem presents a single 64Kbyte range of addresses. The internal interconnect bus (also called switched central resource, or SCR) of the PRUSS decodes accesses for each of the individual regions. The PRUSS memory map is documented in Table 5-140 and in Table 5-141. Note that these two memory maps are implemented inside the PRUSS and are local to the components of the PRUSS.

Table 5-140. Programmable Real-Time Unit Subsystem (PRUSS) Local Instruction Space Memory Map

BYTE ADDRESS	PRU0	PRU1
0x0000 0000 - 0x0000 0FFF	PRU0 Instruction RAM	PRU1 Instruction RAM

Table 5-141. Programmable Real-Time Unit Subsystem (PRUSS) Local Data Space Memory Map

BYTE ADDRESS	PRU0	PRU1
0x0000 0000 - 0x0000 01FF	Data RAM 0 (1)	Data RAM 1 (1)
0x0000 0200 - 0x0000 1FFF	Reserved	Reserved
0x0000 2000 - 0x0000 21FF	Data RAM 1 (1)	Data RAM 0 (1)
0x0000 2200 - 0x0000 3FFF	Reserved	Reserved
0x0000 4000 - 0x0000 6FFF	INTC Registers	INTC Registers
0x0000 7000 - 0x0000 73FF	PRU0 Control Registers	PRU0 Control Registers
0x0000 7400 - 0x0000 77FF	Reserved	Reserved
0x0000 7800 - 0x0000 7BFF	PRU1 Control Registers	PRU1 Control Registers
0x0000 7C00 - 0xFFFF FFFF	Reserved	Reserved

(1) Note that PRU0 accesses Data RAM**0** at address 0x0000 0000, also PRU1 accesses Data RAM**1** at address 0x0000 0000. Data RAM0 is intended to be the primary data memory for PRU0 and Data RAM1 is intended to be the primary data memory for PRU1. However for passing information between PRUs, each PRU can access the data ram of the 'other' PRU through address 0x0000 2000.

The global view of the PRUSS internal memories and control ports is documented in Table 5-142. The offset addresses of each region are implemented inside the PRUSS but the global device memory mapping places the PRUSS slave port in the address range 0x01C3 0000-0x01C3 FFFF. The PRU0 and PRU1 can use either the local or global addresses to access their internal memories, but using the local addresses will provide access time several cycles faster than using the global addresses. This is because when accessing via the global address the access needs to be routed through the switch fabric outside PRUSS and back in through the PRUSS slave port.

Table 5-142. Programmable Real-Time Unit Subsystem (PRUSS) Global Memory Map

BYTE ADDRESS	REGION
0x01C3 0000 - 0x01C3 01FF	Data RAM 0
0x01C3 0200 - 0x01C3 1FFF	Reserved
0x01C3 2000 - 0x01C3 21FF	Data RAM 1
0x01C3 2200 - 0x01C3 3FFF	Reserved
0x01C3 4000 - 0x01C3 6FFF	INTC Registers
0x01C3 7000 - 0x01C3 73FF	PRU0 Control Registers
0x01C3 7400 - 0x01C3 77FF	PRU0 Debug Registers
0x01C3 7800 - 0x01C3 7BFF	PRU1 Control Registers
0x01C3 7C00 - 0x01C3 7FFF	PRU1 Debug Registers
0x01C3 8000 - 0x01C3 8FFF	PRU0 Instruction RAM
0x01C3 9000 - 0x01C3 BFFF	Reserved
0x01C3 C000 - 0x01C3 CFFF	PRU1 Instruction RAM
0x01C3 D000 - 0x01C3 FFFF	Reserved

Each of the PRUs can access the rest of the device memory (including memory mapped peripheral and configuration registers) using the global memory space addresses

5.33.1 PRUSS Register Descriptions

Table 5-143. Programmable Real-Time Unit Subsystem (PRUSS) Control / Status Registers

PRU0 BYTE ADDRESS	PRU1 BYTE ADDRESS	ACRONYM	REGISTER DESCRIPTION
0x01C3 7000	0x01C3 7800	CONTROL	PRU Control Register
0x01C3 7004	0x01C3 7804	STATUS	PRU Status Register
0x01C3 7008	0x01C3 7808	WAKEUP	PRU Wakeup Enable Register
0x01C3 700C	0x01C3 780C	CYCLCNT	PRU Cycle Count
0x01C3 7010	0x01C3 7810	STALLCNT	PRU Stall Count
0x01C3 7020	0x01C3 7820	CONTABBLKIDX0	PRU Constant Table Block Index Register 0
0x01C3 7028	0x01C3 7828	CONTABPROPTR0	PRU Constant Table Programmable Pointer Register 0
0x01C3 702C	0x01C3 782C	CONTABPROPTR1	PRU Constant Table Programmable Pointer Register 1
0x01C37400 - 0x01C3747C	0x01C3 7C00 - 0x01C3 7C7C	INTGPR0 – INTGPR31	PRU Internal General Purpose Register 0 (for Debug)
0x01C37480 - 0x01C374FC	0x01C3 7C80 - 0x01C3 7CFC	INTCTER0 – INTCTER31	PRU Internal General Purpose Register 0 (for Debug)

Table 5-144. Programmable Real-Time Unit Subsystem Interrupt Controller (PRUSS INTC) Registers

BYTE ADDRESS	ACRONYM	REGISTER DESCRIPTION
0x01C3 4000	REVID	Revision ID Register
0x01C3 4004	CONTROL	Control Register
0x01C3 4010	GLBLEN	Global Enable Register
0x01C3 401C	GLBLNSTLVL	Global Nesting Level Register
0x01C3 4020	STATIDXSET	System Interrupt Status Indexed Set Register
0x01C3 4024	STATIDXCLR	System Interrupt Status Indexed Clear Register
0x01C3 4028	ENIDXSET	System Interrupt Enable Indexed Set Register
0x01C3 402C	ENIDXCLR	System Interrupt Enable Indexed Clear Register
0x01C3 4034	HSTINTENIDXSET	Host Interrupt Enable Indexed Set Register
0x01C3 4038	HSTINTENIDXCLR	Host Interrupt Enable Indexed Clear Register
0x01C3 4080	GLBLPRIIDX	Global Prioritized Index Register

 Copyright © 2011–2013, Texas Instruments Incorporated

Table 5-144. Programmable Real-Time Unit Subsystem Interrupt Controller (PRUSS INTC) Registers (continued)

BYTE ADDRESS	ACRONYM	REGISTER DESCRIPTION
0x01C3 4200	STATSETINT0	System Interrupt Status Raw/Set Register 0
0x01C3 4204	STATSETINT1	System Interrupt Status Raw/Set Register 1
0x01C3 4280	STATCLRINT0	System Interrupt Status Enabled/Clear Register 0
0x01C3 4284	STATCLRINT1	System Interrupt Status Enabled/Clear Register 1
0x01C3 4300	ENABLESET0	System Interrupt Enable Set Register 0
0x01C3 4304	ENABLESET1	System Interrupt Enable Set Register 1
0x01C3 4380	ENABLECLR0	System Interrupt Enable Clear Register 0
0x01C3 4384	ENABLECLR1	System Interrupt Enable Clear Register 1
0x01C3 4400 - 0x01C3 4440	CHANMAP0 - CHANMAP15	Channel Map Registers 0-15
0x01C3 4800 - 0x01C3 4808	HOSTMAP0 - HOSTMAP2	Host Map Register 0-2
0x01C3 4900 - 0x01C3 4928	HOSTINTPRIIDX0 - HOSTINTPRIIDX9	Host Interrupt Prioritized Index Registers 0-9
0x01C3 4D00	POLARITY0	System Interrupt Polarity Register 0
0x01C3 4D04	POLARITY1	System Interrupt Polarity Register 1
0x01C3 4D80	TYPE0	System Interrupt Type Register 0
0x01C3 4D84	TYPE1	System Interrupt Type Register 1
0x01C3 5100 - 0x01C3 5128	HOSTINTNSTLVL0-HOSTINTNSTLVL9	Host Interrupt Nesting Level Registers 0-9
0x01C3 5500	HOSTINTEN	Host Interrupt Enable Register

5.34 Emulation Logic

This section describes the steps to use a third party debugger on the ARM926EJ-S within the device. The debug capabilities and features for DSP and ARM are as shown below.

DSP:

- Basic Debug
  - Execution Control
  - System Visibility
- Real-Time Debug
  - Interrupts serviced while halted
  - Low/non-intrusive system visibility while running
- Advanced Debug
  - Global Start
  - Global Stop
  - Specify targeted memory level(s) during memory accesses
  - HSRTDX (High Speed Real Time Data eXchange)
- Advanced System Control
  - Subsystem reset via debug
  - Peripheral notification of debug events
  - Cache-coherent debug accesses
- Analysis Actions
  - Stop program execution
  - Generate debug interrupt
  - Benchmarking with counters
  - External trigger generation
  - Debug state machine state transition
  - Combinational and Sequential event generation
- Analysis Events
  - Program event detection
  - Data event detection
  - External trigger Detection
  - System event detection (i.e. cache miss)
  - Debug state machine state detection
- Analysis Configuration
  - Application access
  - Debugger access

Table 5-145. DSP Debug Features

Category	Hardware Feature	Availability
Basic Debug	Software breakpoint	Unlimited
	Hardware breakpoint	Up to 10 HWBPs, including: 4 precise[(1)] HWBPs inside DSP core and one of them is associated with a counter. 2 imprecise[(1)] HWBPs from AET. 4 imprecise[(1)] HWBPs from AET which are shared for watch point.

(1) Precise hardware breakpoints will halt the processor immediately prior to the execution of the selected instruction. Imprecise breakpoints will halt the processor some number of cycles after the selected instruction depending on device conditions.

 Copyright © 2011–2013, Texas Instruments Incorporated

Table 5-145. DSP Debug Features (continued)

Category	Hardware Feature	Availability
Analysis	Watch point	Up to 4 watch points, which are shared with HWBPs, and can also be used as 2 watch points with data (32 bits)
	Watch point with Data	Up to 2, Which can also be used as 4 watch points.
	Counters/timers	1x64-bits (cycle only) + 2x32-bits (water mark counters)
	External Event Trigger In	1
	External Event Trigger Out	1

ARM:

- Basic Debug
  - Execution Control
  - System Visibility
- Advanced Debug
  - Global Start
  - Global Stop
- Advanced System Control
  - Subsystem reset via debug
  - Peripheral notification of debug events
  - Cache-coherent debug accesses
- Program Trace
  - Program flow corruption
  - Code coverage
  - Path coverage
  - Thread/interrupt synchronization problems
- Data Trace
  - Memory corruption
- Timing Trace
  - Profiling
- Analysis Actions
  - Stop program execution
  - Control trace streams
  - Generate debug interrupt
  - Benchmarking with counters
  - External trigger generation
  - Debug state machine state transition
  - Combinational and Sequential event generation
- Analysis Events
  - Program event detection
  - Data event detection
  - External trigger Detection
  - System event detection (i.e. cache miss)
  - Debug state machine state detection
- Analysis Configuration
  - Application access
  - Debugger access

Table 5-146. ARM Debug Features

Category	Hardware Feature	Availability
Basic Debug	Software breakpoint	Unlimited
	Hardware breakpoint	Up to 14 HWBPs, including: 2 precise(1) HWBP inside ARM core which are shared with watch points. 8 imprecise(1) HWBPs from ETM's address comparators, which are shared with trace function, and can be used as watch points. 4 imprecise(1) HWBPs from ICECrusher.
Analysis	Watch point	Up to 6 watch points, including: 2 from ARM core which is shared with HWBPs and can be associated with a data. 8 from ETM's address comparators, which are shared with trace function, and HWBPs.
	Watch point with Data	2 from ARM core which is shared with HWBPs. 8 watch points from ETM can be associated with a data comparator, and ETM has total 4 data comparators.
	Counters/timers	3x32-bit (1 cycle ; 2 event)
	External Event Trigger In	1
	External Event Trigger Out	1
	Internal Cross-Triggering Signals	One between ARM and DSP
Trace Control	Address range for trace	4
	Data qualification for trace	2
	System events for trace control	20
	Counters/Timers for trace control	2x16-bit
	State Machines/Sequencers	1x3-State State Machine
	Context/Thread ID Comparator	1
	Independent trigger control units	12
On-chip Trace Capture	Capture depth PC	4k bytes ETB
	Capture depth PC + Timing	4k bytes ETB
	Application accessible	Y

(1) Precise hardware breakpoints will halt the processor immediately prior to the execution of the selected instruction. Imprecise breakpoints will halt the processor some number of cycles after the selected instruction depending on device conditions.

5.34.1 JTAG Port Description

The device target debug interface uses the five standard IEEE 1149.1(JTAG) signals ($\overline{\text{TRST}}$, TCK, TMS, TDI, and TDO), a return clock (RTCK) due to the clocking requirements of the ARM926EJ-S and emulation signals EMU0 and EMU1.

TRST holds the debug and boundary scan logic in reset (normal DSP operation) when pulled low (its default state). Since TRST has an internal pull-down resistor, this ensures that at power up the device functions in its normal (non-test) operation mode if TRST is not connected. Otherwise, TRST should be driven inactive by the emulator or boundary scan controller. Boundary scan test cannot be performed while the TRST pin is pulled low.

Table 5-147. JTAG Port Description

PIN	TYPE	NAME	DESCRIPTION
$\overline{\text{TRST}}$	I	Test Logic Reset	When asserted (active low) causes all test and debug logic in the device to be reset along with the IEEE 1149.1 interface
TCK	I	Test Clock	This is the test clock used to drive an IEEE 1149.1 TAP state machine and logic. Depending on the emulator attached to , this is a free running clock or a gated clock depending on RTCK monitoring.
RTCK	O	Returned Test Clock	Synchronized TCK. Depending on the emulator attached to, the JTAG signals are clocked from RTCK or RTCK is monitored by the emulator to gate TCK.
TMS	I	Test Mode Select	Directs the next state of the IEEE 1149.1 test access port state machine

 Copyright © 2011–2013, Texas Instruments Incorporated

Table 5-147. JTAG Port Description (continued)

PIN	TYPE	NAME	DESCRIPTION
TDI	I	Test Data Input	Scan data input to the device
TDO	O	Test Data Output	Scan data output of the device
EMU0	I/O	Emulation 0	Channel 0 trigger + HSRTDX
EMU1	I/O	Emulation 1	Channel 1 trigger + HSRTDX

5.34.2 Scan Chain Configuration Parameters

Table 5-148 shows the TAP configuration details required to configure the router/emulator for this device.

Table 5-148. JTAG Port Description

Router Port ID	Default TAP	TAP Name	Tap IR Length
17	No	C674x	38
18	No	ARM926	4
19	No	ETB	4

The router is revision C and has a 6-bit IR length.

5.34.3 Initial Scan Chain Configuration

The first level of debug interface that sees the scan controller is the TAP router module. The debugger can configure the TAP router for serially linking up to 16 TAP controllers or individually scanning one of the TAP controllers without disrupting the IR state of the other TAPs.

5.34.3.1 Adding TAPS to the Scan Chain

The TAP router must be programmed to add additional TAPs to the scan chain. The following JTAG scans must be completed to add the ARM926EJ-S to the scan chain.

A Power-On Reset (POR) or the JTAG Test-Logic Reset state configures the TAP router to contain only the router's TAP.

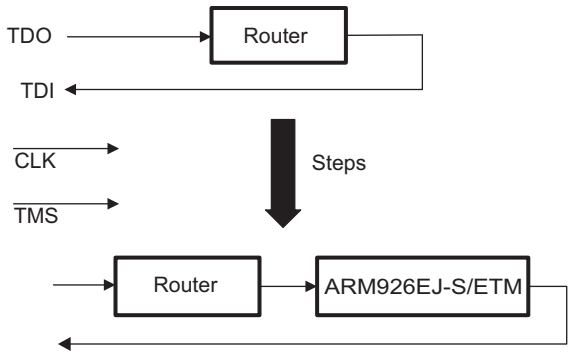

Figure 5-88. Adding ARM926EJ-S to the scan chain

Pre-amble: The device whose data reaches the emulator first is listed first in the board configuration file. This device is a pre-amble for all the other devices. This device has the lowest device ID.

Post-amble: The device whose data reaches the emulator last is listed last in the board configuration file. This device is a post-amble for all the other devices. This device has the highest device ID.

- Function : Update the JTAG preamble and post-amble counts.
  - Parameter : The IR pre-amble count is '0'.
  - Parameter : The IR post-amble count is '0'.
  - Parameter : The DR pre-amble count is '0'.
  - Parameter : The DR post-amble count is '0'.
  - Parameter : The IR main count is '6'.
  - Parameter : The DR main count is '1'.
- Function : Do a send-only JTAG IR/DR scan.
  - Parameter : The route to JTAG shift state is 'shortest transition'.
  - Parameter : The JTAG shift state is 'shift-ir'.
  - Parameter : The JTAG destination state is 'pause-ir'.
  - Parameter : The bit length of the command is '6'.
  - Parameter : The send data value is '0x00000007'.
  - Parameter : The actual receive data is 'discarded'.
- Function : Do a send-only JTAG IR/DR scan.
  - Parameter : The route to JTAG shift state is 'shortest transition'.
  - Parameter : The JTAG shift state is 'shift-dr'.
  - Parameter : The JTAG destination state is 'pause-dr'.
  - Parameter : The bit length of the command is '8'.
  - Parameter : The send data value is '0x00000089'.
  - Parameter : The actual receive data is 'discarded'.
- Function : Do a send-only JTAG IR/DR scan.
  - Parameter : The route to JTAG shift state is 'shortest transition'.
  - Parameter : The JTAG shift state is 'shift-ir'.
  - Parameter : The JTAG destination state is 'pause-ir'.
  - Parameter : The bit length of the command is '6'.
  - Parameter : The send data value is '0x00000002'.
  - Parameter : The actual receive data is 'discarded'.
- Function : Embed the port address in next command.
  - Parameter : The port address field is '0x0f000000'.
  - Parameter : The port address value is '3'.
- Function : Do a send-only JTAG IR/DR scan.
  - Parameter : The route to JTAG shift state is 'shortest transition'.
  - Parameter : The JTAG shift state is 'shift-dr'.
  - Parameter : The JTAG destination state is 'pause-dr'.
  - Parameter : The bit length of the command is '32'.
  - Parameter : The send data value is '0xa2002108'.
  - Parameter : The actual receive data is 'discarded'.
- Function : Do a send-only all-ones JTAG IR/DR scan.
  - Parameter : The JTAG shift state is 'shift-ir'.
  - Parameter : The JTAG destination state is 'run-test/idle'.
  - Parameter : The bit length of the command is '6'.
  - Parameter : The send data value is 'all-ones'.
  - Parameter : The actual receive data is 'discarded'.
- Function : Wait for a minimum number of TCLK pulses.
  - Parameter : The count of TCLK pulses is '10'.

 Copyright © 2011–2013, Texas Instruments Incorporated

- Function : Update the JTAG preamble and post-amble counts.
  - Parameter : The IR pre-amble count is '0'.
  - Parameter : The IR post-amble count is '6'.
  - Parameter : The DR pre-amble count is '0'.
  - Parameter : The DR post-amble count is '1'.
  - Parameter : The IR main count is '4'.
  - Parameter : The DR main count is '1'.

The initial scan chain contains only the TAP router module. The following steps must be completed in order to add ETB TAP to the scan chain.

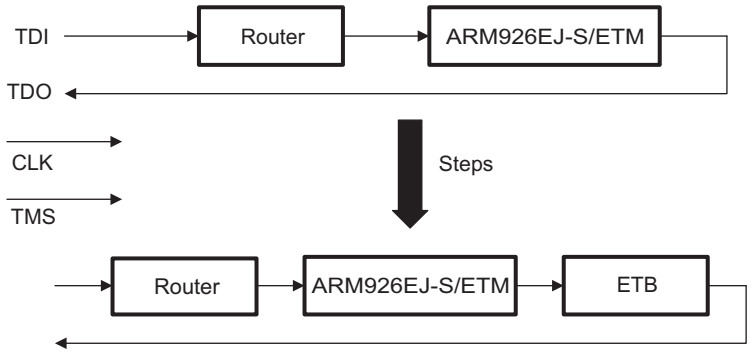

Figure 5-89. Adding ETB to the scan chain

- Function : Do a send-only JTAG IR/DR scan.
  - Parameter : The route to JTAG shift state is 'shortest transition'.
  - Parameter : The JTAG shift state is 'shift-ir'.
  - Parameter : The JTAG destination state is 'pause-ir'.
  - Parameter : The bit length of the command is '6'.
  - Parameter : The send data value is '0x00000007'.
  - Parameter : The actual receive data is 'discarded'.
- Function : Do a send-only JTAG IR/DR scan.
  - Parameter : The route to JTAG shift state is 'shortest transition'.
  - Parameter : The JTAG shift state is 'shift-dr'.
  - Parameter : The JTAG destination state is 'pause-dr'.
  - Parameter : The bit length of the command is '8'.
  - Parameter : The send data value is '0x00000089'.
  - Parameter : The actual receive data is 'discarded'.
- Function : Do a send-only JTAG IR/DR scan.
  - Parameter : The route to JTAG shift state is 'shortest transition'.
  - Parameter : The JTAG shift state is 'shift-ir'.
  - Parameter : The JTAG destination state is 'pause-ir'.
  - Parameter : The bit length of the command is '6'.
  - Parameter : The send data value is '0x00000002'.
  - Parameter : The actual receive data is 'discarded'.
- Function : Embed the port address in next command.
  - Parameter : The port address field is '0x0f000000'.
  - Parameter : The port address value is '3'.

- Function : Do a send-only JTAG IR/DR scan.
  - Parameter : The route to JTAG shift state is 'shortest transition'.
  - Parameter : The JTAG shift state is 'shift-dr'.
  - Parameter : The JTAG destination state is 'pause-dr'.
  - Parameter : The bit length of the command is '32'.
  - Parameter : The send data value is '0xa3302108'.
  - Parameter : The actual receive data is 'discarded'.
- Function : Do a send-only all-ones JTAG IR/DR scan.
  - Parameter : The JTAG shift state is 'shift-ir'.
  - Parameter : The JTAG destination state is 'run-test/idle'.
  - Parameter : The bit length of the command is '6'.
  - Parameter : The send data value is 'all-ones'.
  - Parameter : The actual receive data is 'discarded'.
- Function : Wait for a minimum number of TCLK pulses.
  - Parameter : The count of TCLK pulses is '10'.
- Function : Update the JTAG preamble and post-amble counts.
  - Parameter : The IR pre-amble count is '0'.
  - Parameter : The IR post-amble count is '6 + 4'.
  - Parameter : The DR pre-amble count is '0'.
  - Parameter : The DR post-amble count is '1 + 1'.
  - Parameter : The IR main count is '4'.
  - Parameter : The DR main count is '1'.

 Copyright © 2011–2013, Texas Instruments Incorporated

5.34.4 IEEE 1149.1 JTAG

The JTAG [(1)] interface is used for BSDL testing and emulation of the device.

The device requires that both $\overline{\text{TRST}}$ and $\overline{\text{RESET}}$ be asserted upon power up to be properly initialized. While $\overline{\text{RESET}}$ initializes the device, $\overline{\text{TRST}}$ initializes the device's emulation logic. Both resets are required for proper operation.

While both $\overline{\text{TRST}}$ and $\overline{\text{RESET}}$ need to be asserted upon power up, only $\overline{\text{RESET}}$ needs to be released for the device to boot properly. $\overline{\text{TRST}}$ may be asserted indefinitely for normal operation, keeping the JTAG port interface and device's emulation logic in the reset state.

$\overline{\text{TRST}}$ only needs to be released when it is necessary to use a JTAG controller to debug the device or exercise the device's boundary scan functionality. Note: $\overline{\text{TRST}}$ is synchronous and ***must*** be clocked by TCK; otherwise, the boundary scan logic may not respond as expected after $\overline{\text{TRST}}$ is asserted.

$\overline{\text{RESET}}$ must be released only in order for boundary-scan JTAG to read the variant field of IDCODE correctly. Other boundary-scan instructions work correctly independent of current state of $\overline{\text{RESET}}$.

For maximum reliability, the device includes an internal pulldown (IPD) on the $\overline{\text{TRST}}$ pin to ensure that $\overline{\text{TRST}}$ will always be asserted upon power up and the device's internal emulation logic will always be properly initialized.

JTAG controllers from Texas Instruments actively drive $\overline{\text{TRST}}$ high. However, some third-party JTAG controllers may not drive $\overline{\text{TRST}}$ high but expect the use of a pullup resistor on $\overline{\text{TRST}}$.

When using this type of JTAG controller, assert $\overline{\text{TRST}}$ to initialize the device after powerup and externally drive $\overline{\text{TRST}}$ high before attempting any emulation or boundary scan operations.

5.34.4.1 JTAG Peripheral Register Description(s) – JTAG ID Register (DEVIDR0)

Table 5-149. DEVIDR0 Register

BYTE ADDRESS	ACRONYM	REGISTER DESCRIPTION	COMMENTS
0x01C1 4018	DEVIDR0	JTAG Identification Register	Read-only. Provides 32-bit JTAG ID of the device.

(1) IEEE Standard 1149.1-1990 Standard-Test-Access Port and Boundary Scan Architecture.

The JTAG ID register is a read-only register that identifies to the customer the JTAG/Device ID. For the device, the JTAG ID register resides at address location 0x01C1 4018. The register hex value for each silicon revision is:

- 0x0B7D 102F for silicon revision 1.0
- 0x0B7D 102F for silicon revision 1.1
- 0x1B7D 102F for silicon revision 2.0

For the actual register bit names and their associated bit field descriptions, see Figure 5-90 and Table 5-150.

31-28	27-12	11-1	0
VARIANT (4-Bit)	PART NUMBER (16-Bit)	MANUFACTURER (11-Bit)	LSB
R-xxxx	R-1011 0111 1101 0001	R-0000 0010 111	R-1

LEGEND: R = Read, W = Write, n = value at reset

Figure 5-90. JTAG ID (DEVIDR0) Register Description - Register Value

Table 5-150. JTAG ID Register Selection Bit Descriptions

BIT	NAME	DESCRIPTION
31:28	VARIANT	Variant (4-Bit) value
27:12	PART NUMBER	Part Number (16-Bit) value
11-1	MANUFACTURER	Manufacturer (11-Bit) value
0	LSB	LSB. This bit is read as a "1".

5.34.4.2 JTAG Test-Port Electrical Data/Timing

Table 5-151. Timing Requirements for JTAG Test Port (see Figure 5-91)

No.	PARAMETER		1.3V, 1.2V		1.1V		1.0V		UNIT
			MIN	MAX	MIN	MAX	MIN	MAX	
1	$t_{c(TCK)}$	Cycle time, TCK	40		50		66.6		ns
2	$t_{w(TCKH)}$	Pulse duration, TCK high	16		20		26.6		ns
3	$t_{w(TCKL)}$	Pulse duration, TCK low	16		20		26.6		ns
4	$t_{c(RTCK)}$	Cycle time, RTCK	40		50		66.6		ns
5	$t_{w(RTCKH)}$	Pulse duration, RTCK high	16		20		26.6		ns
6	$t_{w(RTCKL)}$	Pulse duration, RTCK low	16		20		26.6		ns
7	$t_{su(TDIV-RTCKH)}$	Setup time, TDI/TMS/$\overline{TRST}$ valid before RTCK high	4		4		4		ns
8	$t_{h(RTCKH-TDIV)}$	Hold time, TDI/TMS/$\overline{TRST}$ valid after RTCK high	4		6		8		ns

Table 5-152. Switching Characteristics Over Recommended Operating Conditions for JTAG Test Port (see Figure 5-91)

No.	PARAMETER		1.3V, 1.2V		1.1V		1.0V		UNIT
			MIN	MAX	MIN	MAX	MIN	MAX	
9	$t_{d(RTCKL-TDOV)}$	Delay time, RTCK low to TDO valid		18		23		31	ns

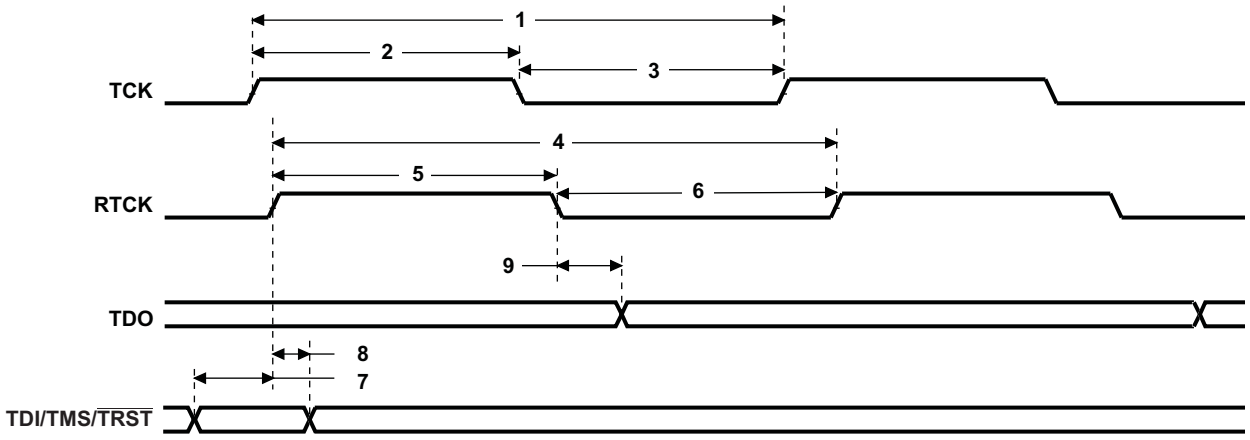

Figure 5-91. JTAG Test-Port Timing

5.34.5 JTAG 1149.1 Boundary Scan Considerations

To use boundary scan, the following sequence should be followed:

- Execute a valid reset sequence and exit reset
- Wait at least 6000 OSCIN clock cycles
- Enter boundary scan mode using the JTAG pins

No specific value is required on the EMU0 and EMU1 pins for boundary scan testing. If TRST is not driven by the boundary scan tool or tester, TRST should be externally pulled high during boundary scan testing.

 Copyright © 2011–2013, Texas Instruments Incorporated

6 Mechanical Packaging and Orderable Information

This section describes the device orderable part numbers, packaging options, materials, thermal and mechanical parameters.

6.1 Device Support

6.1.1 Development Support

TI offers an extensive line of development tools for the device platform, including tools to evaluate the performance of the processors, generate code, develop algorithm implementations, and fully integrate and debug software and hardware modules. The tool's support documentation is electronically available within the Code Composer Studio™ Integrated Development Environment (IDE).

The following products support development of the device applications:

Software Development Tools:

Code Composer Studio™ Integrated Development Environment (IDE): including Editor

C/C++/Assembly Code Generation, and Debug plus additional development tools

Scalable, Real-Time Foundation Software (DSP/BIOS™), which provides the basic run-time target software needed to support any application.

Hardware Development Tools:

Extended Development System (XDS™) Emulator

For a complete listing of development-support tools for the device, visit the Texas Instruments web site on the Worldwide Web at www.ti.com uniform resource locator (URL). For information on pricing and availability, contact the nearest TI field sales office or authorized distributor.

6.1.2 Device and Development-Support Tool Nomenclature

To designate the stages in the product development cycle, TI assigns prefixes to the part numbers of all DSP devices and support tools. Each DSP commercial family member has one of three prefixes: X, P or NULL (e.g., SMOMAPL138B) Texas Instruments recommends two of three possible prefix designators for its support tools: TMDX and TMDS. These prefixes represent evolutionary stages of product development from engineering prototypes (TMX/TMDX) through fully qualified production devices/tools (TMS/TMDS).

Device development evolutionary flow:

X Experimental device that is not necessarily representative of the final device's electrical specifications.

P Final silicon die that conforms to the device's electrical specifications but has not completed quality and reliability verification.

NULL Fully-qualified production device.

Support tool development evolutionary flow:

TMDX Development-support product that has not yet completed Texas Instruments internal qualification testing.

TMDS Fully qualified development-support product.

X and P devices and TMDX development-support tools are shipped against the following disclaimer:

"Developmental product is intended for internal evaluation purposes."

Null devices and TMDS development-support tools have been characterized fully, and the quality and reliability of the device have been demonstrated fully. TI's standard warranty applies.

Predictions show that prototype devices (X or P) have a greater failure rate than the standard production devices. Texas Instruments recommends that these devices not be used in any production system because their expected end-use failure rate still is undefined. Only qualified production devices are to be used.

TI device nomenclature also includes a suffix with the device family name. This suffix indicates the package type (for example, GWT), the temperature range (for example, "Blank" is the commercial temperature range), and the device speed range in megahertz (for example, "Blank" is the default).

Figure 6-1 provides a legend for reading the complete device.

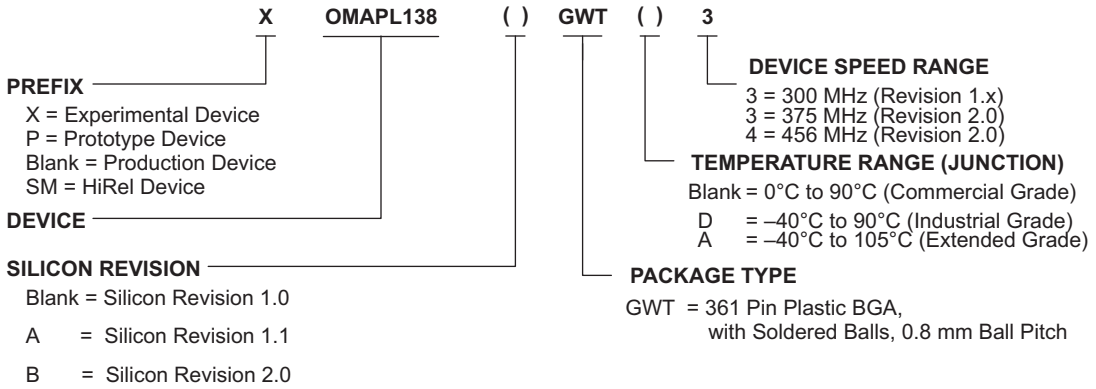

A. BGA = Ball Grid Array

B. The device speed range symbolization indicates the maximum CPU frequency when the core voltage CV_{DD} is set to 1.2 V.

Figure 6-1. Device Nomenclature

Copyright © 2011–2013, Texas Instruments Incorporated

6.2 Thermal Data for GWT Package

The following table(s) show the thermal resistance characteristics for the PBGA–GWT mechanical package.

Table 6-1. Thermal Resistance Characteristics (PBGA Package) [GWT]

NO.			°C/W(1)	AIR FLOW (m/s)(2)
1	$R\Theta_{JC}$	Junction-to-case	7.3	N/A
2	$R\Theta_{JB}$	Junction-to-board	12.4	N /A
3	$R\Theta_{JA}$	Junction-to-free air	23.7	0.00
4	$R\Theta_{JMA}$	Junction-to-moving air	21.0	0.50
5			20.1	1.00
6			19.3	2.00
7			18.4	4.00
8	Psi_{JT}	Junction-to-package top	0.2	0.00
9			0.3	0.50
10			0.3	1.00
11			0.4	2.00
12			0.5	4.00
13	Psi_{JB}	Junction-to-board	12.3	0.00
14			12.2	0.50
15			12.1	1.00
16			12.0	2.00
17			11.9	4.00

(1) These measurements were conducted in a JEDEC defined 2S2P system and will change based on environment as well as application. For more information, see these EIA/JEDEC standards – EIA/JESD51-2, *Integrated Circuits Thermal Test Method Environment Conditions - Natural Convection (Still Air)* and JESD51-7, *High Effective Thermal Conductivity Test Board for Leaded Surface Mount Packages*. Power dissipation of 1W and ambient temp of 70C assumed. PCB with 2oz (70um) top and bottom copper thickness and 1.5oz (50um) inner copper thickness

(2) m/s = meters per second

PACKAGING INFORMATION

Orderable part number	Status (1)	Material type (2)	Package | Pins	Package qty | Carrier	RoHS (3)	Lead finish/ Ball material (4)	MSL rating/ Peak reflow (5)	Op temp (°C)	Part marking (6)
SMOMAPL138BGWTA3R	Active	Production	NFBGA (GWT) | 361	1000 | LARGE T&R	No	SNPB	Level-3-220C-168 HR	-40 to 105	SMOMAPL138B GWT 21

(1) **Status:** For more details on status, see our product life cycle.

(2) **Material type:** When designated, preproduction parts are prototypes/experimental devices, and are not yet approved or released for full production. Testing and final process, including without limitation quality assurance, reliability performance testing, and/or process qualification, may not yet be complete, and this item is subject to further changes or possible discontinuation. If available for ordering, purchases will be subject to an additional waiver at checkout, and are intended for early internal evaluation purposes only. These items are sold without warranties of any kind.

(3) **RoHS values:** Yes, No, RoHS Exempt. See the TI RoHS Statement for additional information and value definition.

(4) **Lead finish/Ball material:** Parts may have multiple material finish options. Finish options are separated by a vertical ruled line. Lead finish/Ball material values may wrap to two lines if the finish value exceeds the maximum column width.

(5) **MSL rating/Peak reflow:** The moisture sensitivity level ratings and peak solder (reflow) temperatures. In the event that a part has multiple moisture sensitivity ratings, only the lowest level per JEDEC standards is shown. Refer to the shipping label for the actual reflow temperature that will be used to mount the part to the printed circuit board.

(6) **Part marking:** There may be an additional marking, which relates to the logo, the lot trace code information, or the environmental category of the part.

Multiple part markings will be inside parentheses. Only one part marking contained in parentheses and separated by a "~" will appear on a part. If a line is indented then it is a continuation of the previous line and the two combined represent the entire part marking for that device.

Important Information and Disclaimer: The information provided on this page represents TI's knowledge and belief as of the date that it is provided. TI bases its knowledge and belief on information provided by third parties, and makes no representation or warranty as to the accuracy of such information. Efforts are underway to better integrate information from third parties. TI has taken and continues to take reasonable steps to provide representative and accurate information but may not have conducted destructive testing or chemical analysis on incoming materials and chemicals. TI and TI suppliers consider certain information to be proprietary, and thus CAS numbers and other limited information may not be available for release.

In no event shall TI's liability arising out of such information exceed the total purchase price of the TI part(s) at issue in this document sold by TI to Customer on an annual basis.

GWT (S–PBGA–N361) PLASTIC BALL GRID ARRAY

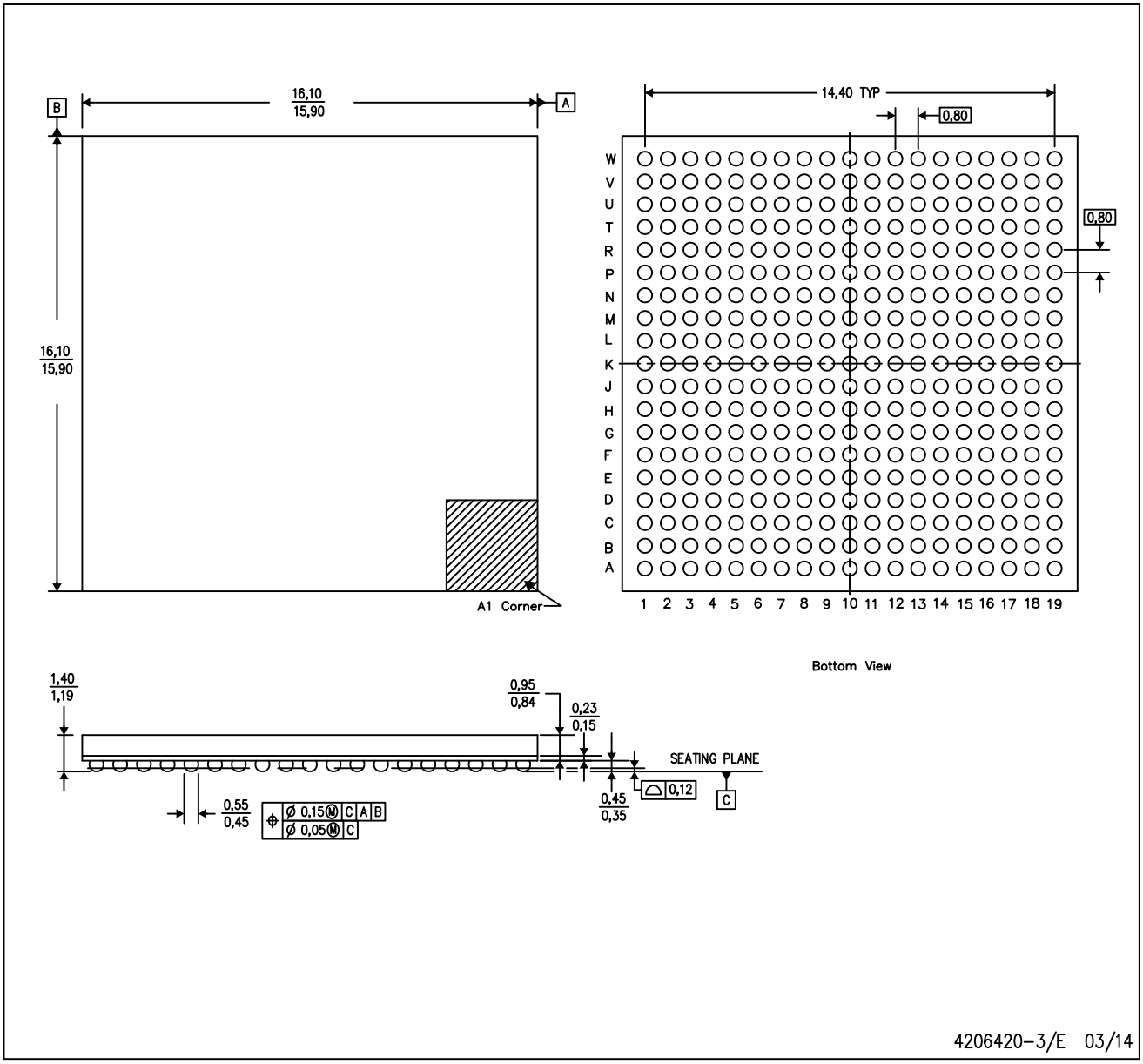

NOTES: A. All linear dimensions are in millimeters.
B. This drawing is subject to change without notice.

重要通知和免责声明

TI“按原样”提供技术和可靠性数据（包括数据表）、设计资源（包括参考设计）、应用或其他设计建议、网络工具、安全信息和其他资源，不保证没有瑕疵且不做出任何明示或暗示的担保，包括但不限于对适销性、与某特定用途的适用性或不侵犯任何第三方知识产权的暗示担保。

这些资源可供使用 TI 产品进行设计的熟练开发人员使用。您将自行承担以下全部责任：(1) 针对您的应用选择合适的 TI 产品，(2) 设计、验证并测试您的应用，(3) 确保您的应用满足相应标准以及任何其他安全、安保法规或其他要求。

这些资源如有变更，恕不另行通知。TI 授权您仅可将这些资源用于研发本资源所述的 TI 产品的相关应用。严禁以其他方式对这些资源进行复制或展示。您无权使用任何其他 TI 知识产权或任何第三方知识产权。对于因您对这些资源的使用而对 TI 及其代表造成的任何索赔、损害、成本、损失和债务，您将全额赔偿，TI 对此概不负责。

TI 提供的产品受 TI 销售条款)、TI 通用质量指南 或 ti.com 上其他适用条款或 TI 产品随附的其他适用条款的约束。TI 提供这些资源并不会扩展或以其他方式更改 TI 针对 TI 产品发布的适用的担保或担保免责声明。 除非德州仪器 (TI) 明确将某产品指定为定制产品或客户特定产品，否则其产品均为按确定价格收入目录的标准通用器件。

TI 反对并拒绝您可能提出的任何其他或不同的条款。

版权所有 © 2026，德州仪器 (TI) 公司

最后更新日期：2025 年 10 月