具有中断逻辑和复位功能的 PCA9545A 低压 4 通道 I2C 和 SMbus 开关

1 特性

- 4 选 1 双向转换开关
- 与 I^2C 总线和 SMBus 兼容
- 四个低电平有效中断输入
- 低电平有效中断输出
- 低电平有效复位输入
- 两个地址终端，允许在 I2C 总线上使用多达四个器件
- 以任意组合通过 I^2C 总线实现通道选择
- 加电时所有开关通道取消选定
- 低 R_{ON} 开关
- 支持 1.8V，2.5V，3.3V 和 5V 总线间的电压电平转换
- 加电时无干扰
- 支持热插入
- 低待机电流
- 工作电源电压范围为 2.3V 至 5.5V
- 5.5V 耐压输入
- 0 至 400kHz 时钟频率
- 锁断性能超过了 100mA，符合 JESD 78 规范
- ESD 保护性能超过 JESD 22 规范要求
  - 2000V 人体放电模型 (A114-A)
  - 1000V 带电器件模型 (C101)

2 应用

- 服务器
- 路由器（电信交换设备）
- 工厂自动化
- 具有 I^2C 从地址冲突的产品（例如，多个完全一样的温度传感器）

3 说明

PCA9545A 是一款由 I2C 总线控制的四路双向转换开关。SCL/SDA 上行对扩展到四个下行对，或者通道。根据可编程控制寄存器的内容，可选择任一单独 SCn/SDn 通道或者通道组合。提供四个中断输入 ($\overline{INT3}$-$\overline{INT0}$)，每个中断输入针对一个下行对。一个中断 (INT) 输出是四个中断输入的与运算结果。

一个低电平有效复位 (RESET) 输入使得 PCA9545A 能够在其中一个下行 I2C 总线长时间处于低电平状态时恢复。 将 RESET 下拉为低电平会使 I2C 状态机复位，并且使所有通道取消选中，这一功能与内部上电复位功能的作用一样。

由于开关上有导通栅极，因此，VCC 引脚可用于限制将由 PCA9545A 传递的最大电压。这允许在每个对上使用不同的总线电压，以便 1.8V，2.5V 或 3.3V 部件可以在没有任何额外保护的情况下与 5V 部件通信。对于每个通道，外部上拉电阻器将总线电压上拉至所需的电压水平。所有 I/O 引脚为 5.5V 耐压。

器件信息

器件型号	封装(1)	封装尺寸（标称值）
PCA9545A	TVSOP (DGV) (20)	5.00mm x 4.40mm
	SOIC (DW) (20)	12.8mm x 7.50mm
	TSSOP (PW) (20)	6.50mm x 4.40mm
	VQFN (RGW) (20)	5.00mm x 5.00mm
	VQFN (RGY) (20)	4.50mm x 3.50mm
	BGA (GQN) (20)	4.00mm x 4.00mm
	BGA (ZQN) (20)	4.00mm x 3.00mm

(1) 如需了解所有可用封装，请参阅数据表末尾的可订购产品附录。

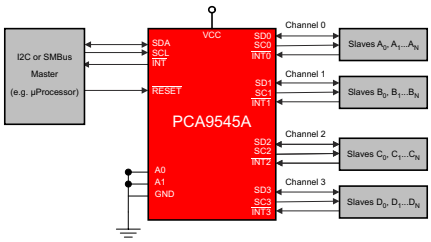

简化版应用示意图

本文档旨在为方便起见，提供有关 TI 产品中文版本的信息，以确认产品的概要。有关适用的官方英文版本的最新信息，请访问 www.ti.com，其内容始终优先。TI 不保证翻译的准确性和有效性。在实际设计之前，请务必参考最新版本的英文版本。

Table of Contents

1 特性 1
2 应用 1
3 说明 1
4 Revision History 2
5 Pin Configuration and Functions 3
6 Specifications 4
6.1 Absolute Maximum Ratings 4
6.2 ESD Ratings 4
6.3 Recommended Operating Conditions 4
6.4 Thermal Information 4
6.5 Electrical Characteristics 5
6.6 I^2C Interface Timing Requirements 6
6.7 Switching Characteristics 7
6.8 Interrupt and Reset Timing Requirements 7
7 Parameter Measurement Information 8
8 Detailed Description 10
8.1 Overview 10
8.2 Functional Block Diagram 11
8.3 Feature Description 12
8.4 Device Functional Modes 12
8.5 Programming 12
8.6 Control Register 15
9 Application Information Disclaimer 17
9.1 Application Information 17
9.2 Typical Application 17
10 Power Supply Recommendations 20
10.1 Power-On Reset Requirements 20
11 Layout 22
11.1 Layout Guidelines 22
11.2 Layout Example 22
12 Device and Documentation Support 23
12.1 Receiving Notification of Documentation Updates 23
12.2 Support Resources 23
12.3 Trademarks 23
12.4 Electrostatic Discharge Caution 23
12.5 Glossary 23
13 Mechanical, Packaging, and Orderable Information 23

4 Revision History

Changes from Revision June 2014 (D) to Revision E (March 2021)	Page
• 更改了*器件信息*表	1
• Moved T_{stg} to the *Absolute Maximum Ratings*	4
• Moved the Package thermal impedance to the *Thermal Information* table	4
• Added the *Thermal Information* table	4
• Changed the V_{PORR} row in the *Electrical Characteristics*	5
• Added V_{PORF} row to the *Electrical Characteristics*	5
• Changed the I_{CC} Low inputs and High inputs values in the *Electrical Characteristics*	5
• Changed the ΔI_{CC} ($\overline{INT3}$ – $\overline{INT0}$) MAX values From: 15 µA To: 20 µA in the *Electrical Characteristics*	5
• Changed the R_{on} (4.5 V to 5.5 V) TYP value From: 9 Ω To: 10 Ω in the *Electrical Characteristics*	5
• Changed the R_{on} (3 V to 3.6 V) TYP value From: 11 Ω To: 13 Ω in the *Electrical Characteristics*	5
• Changed Note (2) in the *Electrical Characteristics*	5
• Changed the *Application Curves*	19
• Changed the *Power Supply Recommendations*	20

Changes from Revision October 2006 (C) to Revision D (February 2014)	Page
• Added Added $\overline{RESET}$ Errata section	12

Copyright © 2021 Texas Instruments Incorporated

5 Pin Configuration and Functions

DGV, DW, OR PW PACKAGE
(TOP VIEW)

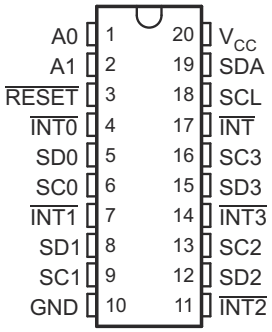

RGW PACKAGE
(TOP VIEW)

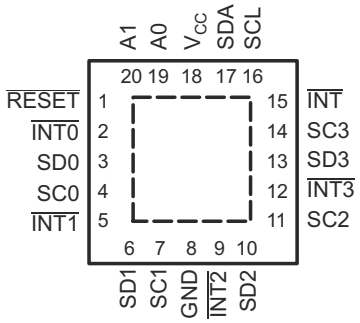

RGY PACKAGE
(TOP VIEW)

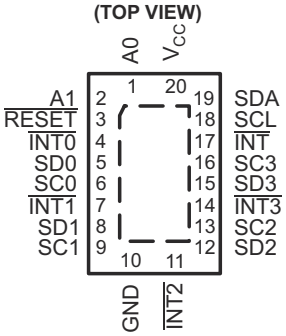

GQN OR ZQN PACKAGE
(TOP VIEW)

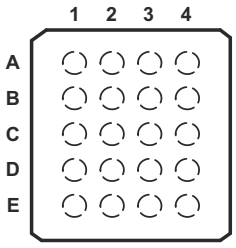

表 5-1. Pin Functions

PIN				DESCRIPTION
NAME	DGV, DW, PW, AND RGY	RGW	GQN AND ZQN	
A0	1	19	A2	Address input 0. Connect directly to V_{CC} or ground.
A1	2	20	A1	Address input 1. Connect directly to V_{CC} or ground.
$\overline{RESET}$	3	1	B3	Active-low reset input. Connect to V_{DPUM} (1) through a pull-up resistor, if not used.
$\overline{INT0}$	4	2	B1	Active-low interrupt input 0. Connect to V_{DPU0} (1) through a pull-up resistor.
SD0	5	3	C2	Serial data 0. Connect to V_{DPU0} (1) through a pull-up resistor.
SC0	6	4	C1	Serial clock 0. Connect to V_{DPU0} (1) through a pull-up resistor.
$\overline{INT1}$	7	5	D3	Active-low interrupt input 1. Connect to V_{DPU1} (1) through a pull-up resistor.
SD1	8	6	D1	Serial data 1. Connect to V_{DPU1} (1) through a pull-up resistor.
SC1	9	7	E2	Serial clock 1. Connect to V_{DPU1} (1) through a pull-up resistor.
GND	10	8	E1	Ground
$\overline{INT2}$	11	9	E3	Active-low interrupt input 2. Connect to V_{DPU2} (1) through a pull-up resistor.
SD2	12	10	E4	Serial data 2. Connect to V_{DPU2} (1) through a pull-up resistor.
SC2	13	11	D2	Serial clock 2. Connect to V_{DPU2} (1) through a pull-up resistor.
$\overline{INT3}$	14	12	D4	Active-low interrupt input 3. Connect to V_{DPU3} (1) through a pull-up resistor.
SD3	15	13	C3	Serial data 3. Connect to V_{DPU3} (1) through a pull-up resistor.
SC3	16	14	C4	Serial clock 3. Connect to V_{DPU3} (1) through a pull-up resistor.
$\overline{INT}$	17	15	B2	Active-low interrupt output. Connect to V_{DPUM} (1) through a pull-up resistor.
SCL	18	16	B4	Serial clock line. Connect to V_{DPUM} (1) through a pull-up resistor.
SDA	19	17	A4	Serial data line. Connect to V_{DPUM} (1) through a pull-up resistor.
VCC	20	18	A3	Supply power

(1) V_{DPUX} is the pull-up reference voltage for the associated data line. V_{DPUM} is the master I^2C reference voltage while V_{DPU0}-V_{DPU3} are the slave channel reference voltages.

Copyright © 2021 Texas Instruments Incorporated

6 Specifications

6.1 Absolute Maximum Ratings

over operating free-air temperature range (unless otherwise noted) (1)

		MIN	MAX	UNIT
V_{CC}	Supply voltage range	–0.5	7	V
V_I	Input voltage range(2)	–0.5	7	V
I_I	Input current		±20	mA
I_O	Output current		±25	mA
	Continuous current through V_{CC}		±100	mA
	Continuous current through GND		±100	mA
P_{tot}	Total power dissipation		400	mW
T_A	Operating free-air temperature range	–40	85	°C
T_{stg}	Storage temperature range	–65	150	°C

(1) Stresses beyond those listed under "absolute maximum ratings" may cause permanent damage to the device. These are stress ratings only, and functional operation of the device at these or any other conditions beyond those indicated under "recommended operating conditions" is not implied. Exposure to absolute-maximum-rated conditions for extended periods may affect device reliability.
(2) The input negative-voltage and output voltage ratings may be exceeded if the input and output current ratings are observed.

6.2 ESD Ratings

			MIN	MAX	UNIT
$V_{(ESD)}$	Electrostatic discharge	Human body model (HBM), per ANSI/ESDA/JEDEC JS-001, all pins(1)	0	2000	V
		Charged device model (CDM), per JEDEC specification JESD22-C101, all pins(2)	0	1000	

(1) JEDEC document JEP155 states that 500-V HBM allows safe manufacturing with a standard ESD control process.
(2) JEDEC document JEP157 states that 250-V CDM allows safe manufacturing with a standard ESD control process.

6.3 Recommended Operating Conditions

See (1)

			MIN	MAX	UNIT
V_{CC}	Supply voltage		2.3	5.5	V
V_{IH}	High-level input voltage	SCL, SDA	0.7 × V_{CC}	6	V
		A1, A0, $\overline{INT3}$ – $\overline{INT0}$, $\overline{RESET}$	0.7 × V_{CC}	V_{CC} + 0.5	
V_{IL}	Low-level input voltage	SCL, SDA	–0.5	0.3 × V_{CC}	V
		A1, A0, $\overline{INT3}$ – $\overline{INT0}$, $\overline{RESET}$	–0.5	0.3 × V_{CC}	
T_A	Operating free-air temperature		–40	85	°C

(1) All unused inputs of the device must be held at V_{CC} or GND to ensure proper device operation. Refer to the TI application report, *Implications of Slow or Floating CMOS Inputs*, literature number SCBA004.

6.4 Thermal Information

THERMAL METRIC(1)		PCA9545A						UNIT
		DGV	DW	PW	RGY	RGW	GQN, ZQN	
		20 PINS	20 PINS	20 PINS	20 PINS	20 PINS	20 PINS	
$R_{\theta JA}$	Junction-to-ambient thermal resistance	92	58	116.3	58.8	62.7	70	°C/W

(1) For more information about traditional and new thermal metrics, see the *Semiconductor and IC package thermal metrics* application report.

Copyright © 2021 Texas Instruments Incorporated

6.5 Electrical Characteristics

over recommended operating free-air temperature range (unless otherwise noted)

PARAMETER			TEST CONDITIONS		V_{CC}	MIN	TYP(1)	MAX	UNIT
V_{PORR}	Power-on reset voltage, V_{CC} rising		No load,	$V_I = V_{CC}$ or GND			1.2	1.5	V
V_{PORF}	Power-on reset voltage, V_{CC} falling(2)		No load,	$V_I = V_{CC}$ or GND		0.8	1		V
V_{pass}	Switch output voltage		$V_{SWin} = V_{CC}$,	$I_{SWout} = -100\ \mu A$	5 V		3.6		V
					4.5 V to 5.5 V	2.6		4.5	
					3.3 V		1.9		
					3 V to 3.6 V	1.6		2.8	
					2.5 V		1.5		
					2.3 V to 2.7 V	1.1		2	
I_{OH}	$\overline{INT}$		$V_O = V_{CC}$		2.3 V to 5.5 V			10	μA
I_{OL}	SCL, SDA		V_{OL} = 0.4 V		2.3 V to 5.5 V	3	7		mA
			V_{OL} = 0.6 V			6	10		
	$\overline{INT}$		V_{OL} = 0.4 V			3			
I_I	SCL, SDA		$V_I = V_{CC}$ or GND		2.3 V to 5.5 V			±1	μA
	SC3 – SC0, SD3 – SD0							±1	
	A1, A0							±1	
	$\overline{INT3}$ – $\overline{INT0}$							±1	
	$\overline{RESET}$							±1	
I_{CC}	Operating mode	f_{SCL} = 100 kHz	$V_I = V_{CC}$ or GND,	$I_O = 0$	5.5 V		3	12	μA
					3.6 V		3	11	
					2.7 V		3	10	
	Standby mode	Low inputs	V_I = GND,	$I_O = 0$	5.5 V		1.6	2	
					3.6 V		1	1.3	
					2.7 V		0.7	1.1	
		High inputs	$V_I = V_{CC}$,	$I_O = 0$	5.5 V		1.6	2	
					3.6 V		1	1.3	
					2.7 V		0.7	1.1	
ΔI_{CC}	Supply-current change	$\overline{INT3}$ – $\overline{INT0}$	One $\overline{INT3}$ – $\overline{INT0}$ input at 0.6 V, Other inputs at V_{CC} or GND		2.3 V to 5.5 V		8	20	μA
			One $\overline{INT3}$ – $\overline{INT0}$ input at V_{CC} – 0.6 V, Other inputs at V_{CC} or GND				8	20	
		SCL, SDA	SCL or SDA input at 0.6 V, Other inputs at V_{CC} or GND				8	15	
			SCL or SDA input at V_{CC} – 0.6 V, Other inputs at V_{CC} or GND				8	15	
C_i	A1, A0		$V_I = V_{CC}$ or GND		2.3 V to 5.5 V		4.5	6	pF
	$\overline{INT3}$ – $\overline{INT0}$						4.5	6	
	$\overline{RESET}$						4.5	5.5	
$C_{io(OFF)}$ (3)	SCL, SDA		$V_I = V_{CC}$ or GND,	Switch OFF	2.3 V to 5.5 V		15	19	pF
	SC3 – SC0, SD3 – SD0						6	8	
R_{ON}	Switch on-state resistance		V_O = 0.4 V,	I_O = 15 mA	4.5 V to 5.5 V	4	10	16	Ω
					3 V to 3.6 V	5	13	20	
			V_O = 0.4 V,	I_O = 10 mA	2.3 V to 2.7 V	7	16	45	

(1) All typical values are at nominal supply voltage (2.5-V, 3.3-V, or 5-V V_{CC}), T_A = 25°C.
(2) The power-on reset circuit resets the I2C bus logic when $V_{cc} < V_{PORF}$.
(3) $C_{io(ON)}$ depends on the device capacitance and load that is downstream from the device.

Copyright © 2021 Texas Instruments Incorporated

6.6 I²C Interface Timing Requirements

over recommended operating free-air temperature range (unless otherwise noted) (see 图 7-1)

			STANDARD MODE I²C BUS		FAST MODE I²C BUS		UNIT
			MIN	MAX	MIN	MAX	
f_{scl}	I²C clock frequency		0	100	0	400	kHz
t_{sch}	I²C clock high time		4		0.6		μs
t_{scl}	I²C clock low time		4.7		1.3		μs
t_{sp}	I²C spike time			50		50	ns
t_{sds}	I²C serial-data setup time		250		100		ns
t_{sdh}	I²C serial-data hold time		0(1)		0(1)		μs
t_{icr}	I²C input rise time			1000	20 + 0.1C_b (2)	300	ns
t_{icf}	I²C input fall time			300	20 + 0.1C_b (2)	300	ns
t_{ocf}	I²C output fall time	10-pF to 400-pF bus		300	20 + 0.1C_b (2)	300	ns
t_{buf}	I²C bus free time between stop and start		4.7		1.3		μs
t_{sts}	I²C start or repeated start condition setup		4.7		0.6		μs
t_{sth}	I²C start or repeated start condition hold		4		0.6		μs
t_{sps}	I²C stop condition setup		4		0.6		μs
$t_{vdL(Data)}$	Valid-data time (high to low)(3)	SCL low to SDA output low valid		1		1	μs
$t_{vdH(Data)}$	Valid-data time (low to high)(3)	SCL low to SDA output high valid		0.6		0.6	μs
$t_{vd(ack)}$	Valid-data time of ACK condition	ACK signal from SCL low to SDA output low		1		1	μs
C_b	I²C bus capacitive load			400		400	pF

(1) A device internally must provide a hold time of at least 300 ns for the SDA signal (referred to as the V_{IH} min of the SCL signal), in order to bridge the undefined region of the falling edge of SCL.
(2) C_b = total bus capacitance of one bus line in pF
(3) Data taken using a 1-kΩ pull-up resistor and 50-pF load (see 图 7-1)

Copyright © 2021 Texas Instruments Incorporated

6.7 Switching Characteristics

over recommended operating free-air temperature range, $C_L \leq 100$ pF (unless otherwise noted) (see 图 7-3)

PARAMETER			FROM (INPUT)	TO (OUTPUT)	MIN	MAX	UNIT
t_{pd} (1)	Propagation delay time	R_{ON} = 20 Ω, C_L = 15 pF	SDA or SCL	SDn or SCn		0.3	ns
		R_{ON} = 20 Ω, C_L = 50 pF				1	
t_{iv}	Interrupt valid time(2)		$\overline{INTn}$	$\overline{INT}$		4	μs
t_{ir}	Interrupt reset delay time(2)		$\overline{INTn}$	$\overline{INT}$		2	μs

(1) The propagation delay is the calculated RC time constant of the typical ON-state resistance of the switch and the specified load capacitance, when driven by an ideal voltage source (zero output impedance).
(2) Data taken using a 4.7-kΩ pull-up resistor and 100-pF load (see 图 7-3)

6.8 Interrupt and Reset Timing Requirements

over recommended operating free-air temperature range (unless otherwise noted) (see 图 7-3)

PARAMETER		MIN	MAX	UNIT
t_{PWRL}	Low-level pulse duration rejection of $\overline{INTn}$ inputs	1		μs
t_{PWRH}	High-level pulse duration rejection of $\overline{INTn}$ inputs	0.5		μs
t_{WL}	Pulse duration, $\overline{RESET}$ low	6		ns
t_{rst} (1)	$\overline{RESET}$ time (SDA clear)		500	ns
$t_{REC(STA)}$	Recovery time from $\overline{RESET}$ to start	0		ns

(1) t_{rst} is the propagation delay measured from the time the $\overline{RESET}$ pin is first asserted low to the time the SDA pin is asserted high, signaling a stop condition. It must be a minimum of t_{WL}.

Copyright © 2021 Texas Instruments Incorporated

7 Parameter Measurement Information

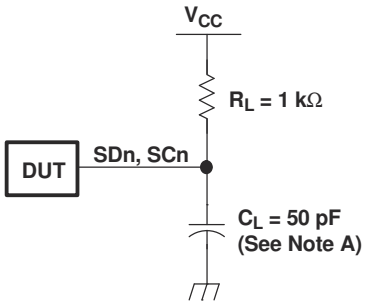

I²C PORT LOAD CONFIGURATION

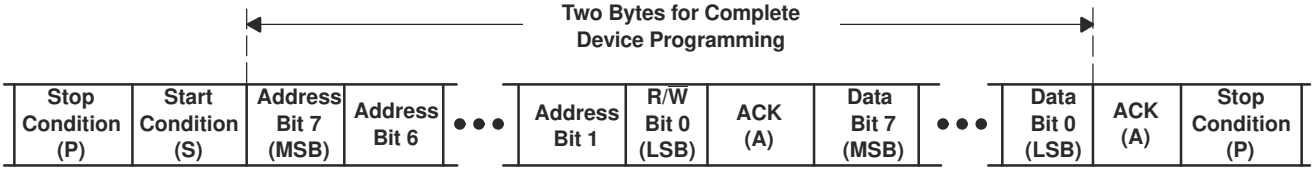

BYTE	DESCRIPTION
1	I²C address + R/W
2	Control register data

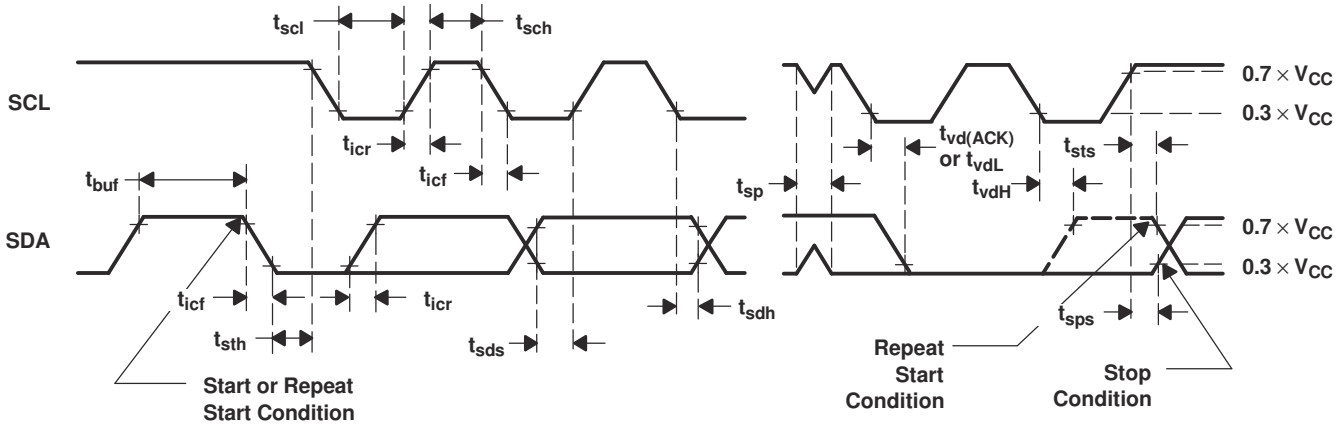

VOLTAGE WAVEFORMS

A. C_L includes probe and jig capacitance.

B. All input pulses are supplied by generators having the following characteristics: PRR ⩽ 10 MHz, Z_O = 50 Ω, t_r/t_f = 30 ns.

C. The outputs are measured one at a time, with one transition per measurement.

图 7-1. I²C Interface Load Circuit, Byte Descriptions, and Voltage Waveforms

Copyright © 2021 Texas Instruments Incorporated

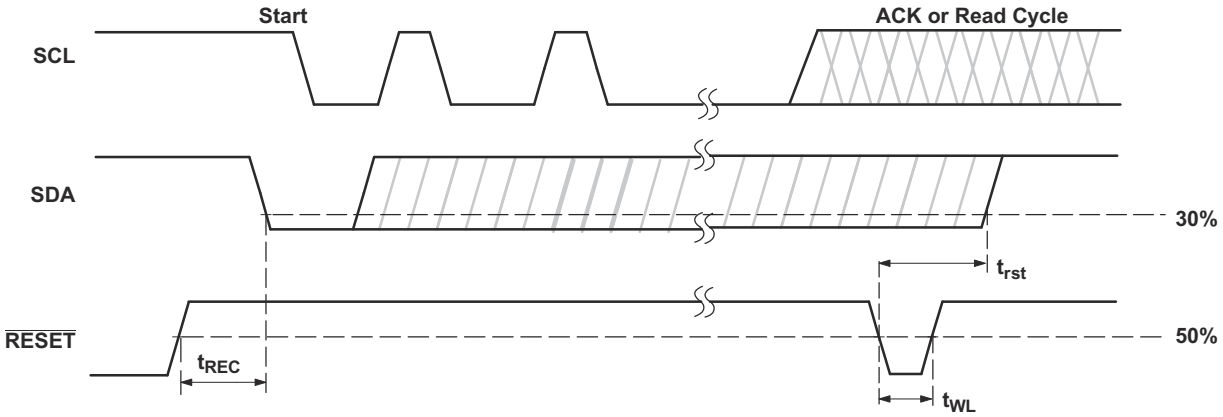

图 7-2. Reset Timing

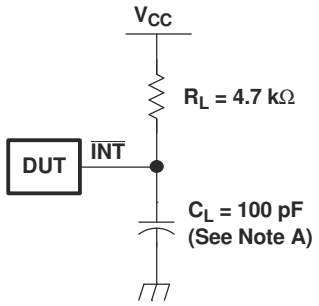

INTERRUPT LOAD CONFIGURATION

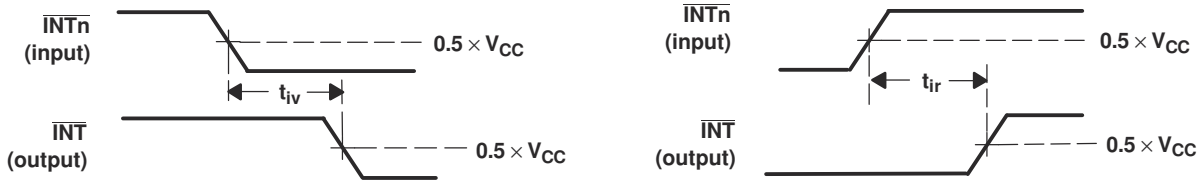

VOLTAGE WAVEFORMS (t_{iv})

VOLTAGE WAVEFORMS (t_{ir})

A. C_L includes probe and jig capacitance.

B. All input pulses are supplied by generators having the following characteristics: PRR ⩽ 10 MHz, Z_O = 50 Ω, t_r/t_f = 30 ns.

图 7-3. Interrupt Load Circuit and Voltage Waveforms

Copyright © 2021 Texas Instruments Incorporated

8 Detailed Description

8.1 Overview

The PCA9545A is a 4-channel, bidirectional translating I^2C switch. The master SCL/SDA signal pair is directed to four channels of slave devices, SC0/SD0-SC3/SD3. Any individual downstream channel can be selected as well as any combination of the four channels. The PCA9545A also supports interrupt signals in order for the master to detect an interrupt on the $\overline{INT}$ output terminal that can result from any of the slave devices connected to the $\overline{INT3}$- $\overline{INT0}$ input terminals.

The device offers an active-low $\overline{RESET}$ input which resets the state machine and allows the PCA9545A to recover should one of the downstream I^2C buses get stuck in a low state. The state machine of the device can also be reset by cycling the power supply, V_{CC}, also known as a power-on reset (POR). Both the $\overline{RESET}$ function and a POR will cause all channels to be deselected.

The connections of the I^2C data path are controlled by the same I^2C master device that is switched to communicate with multiple I^2C slaves. After the successful acknowledgment of the slave address (hardware selectable by A0 and A1 terminals), a single 8-bit control register is written to or read from to determine the selected channels and state of the interrupts.

The PCA9545A may also be used for voltage translation, allowing the use of different bus voltages on each SCn/SDn pair such that 1.8-V, 2.5-V, or 3.3-V parts can communicate with 5-V parts. This is achieved by using external pull-up resistors to pull the bus up to the desired voltage for the master and each slave channel.

Copyright © 2021 Texas Instruments Incorporated

8.2 Functional Block Diagram

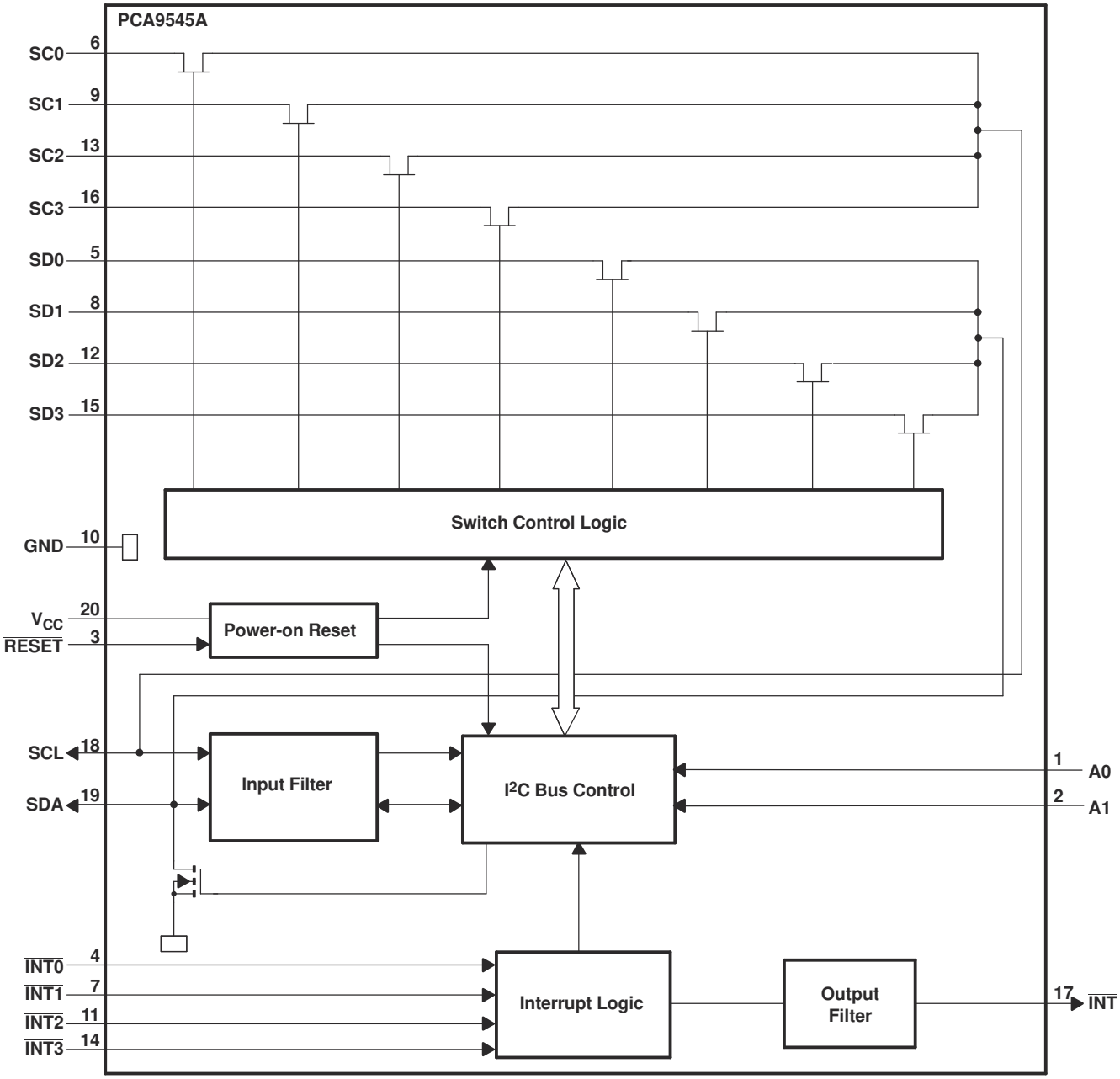

Pin numbers shown are for DGV, DW, PW, and RGY packages.

8.3 Feature Description

The PCA9545A is a 4-channel, bidirectional translating switch for I^2C buses that supports Standard-Mode (100 kHz) and Fast-Mode (400 kHz) operation. The PCA9545A features I^2C control using a single 8-bit control register in which the four least significant bits control the enabling and disabling of the 4 switch channels of I^2C data flow. The PCA9545A also supports interrupt signals for each slave channel and this data is held in the four most significant bits of the control register. Depending on the application, voltage translation of the I^2C bus can also be achieved using the PCA9545A to allow 1.8-V, 2.5-V, or 3.3-V parts to communicate with 5-V parts. Additionally, in the event that communication on the I^2C bus enters a fault state, the PCA9545A can be reset to resume normal operation using the $\overline{\text{RESET}}$ pin feature or by a power-on reset which results from cycling power to the device.

8.4 Device Functional Modes

8.4.1 $\overline{\text{RESET}}$ Input

The $\overline{\text{RESET}}$ input can be used to recover the PCA9545A from a bus-fault condition. The registers and the I^2C state machine within this device initialize to their default states if this signal is asserted low for a minimum of t_{WL}. All channels also are deselected in this case. $\overline{\text{RESET}}$ must be connected to V_{CC} through a pull-up resistor.

8.4.1.1 $\overline{\text{RESET}}$ Errata

If $\overline{\text{RESET}}$ voltage set higher than VCC, current will flow from $\overline{\text{RESET}}$ pin to VCC pin.

8.4.1.1.1

System Impact

VCC will be pulled above its regular voltage level

8.4.1.1.2

System Workaround

Design such that $\overline{\text{RESET}}$ voltage is same or lower than VCC

8.4.2 Power-On Reset

When power is applied to V_{CC}, an internal power-on reset holds the PCA9545A in a reset condition until V_{CC} has reached V_{PORR}. At this point, the reset condition is released and the PCA9545A registers and I^2C state machine are initialized to their default states, all zeroes, causing all the channels to be deselected. Thereafter, V_{CC} must be lowered below at least V_{PORF} to reset the device.

8.5 Programming

8.5.1 I^2C Interface

The I^2C bus is for two-way two-line communication between different ICs or modules. The two lines are a serial data line (SDA) and a serial clock line (SCL). Both lines must be connected to a positive supply via a pull-up resistor when connected to the output stages of a device. Data transfer can be initiated only when the bus is not busy.

One data bit is transferred during each clock pulse. The data on the SDA line must remain stable during the high period of the clock pulse, as changes in the data line at this time are interpreted as control signals (see 图 8-1).

Copyright © 2021 Texas Instruments Incorporated

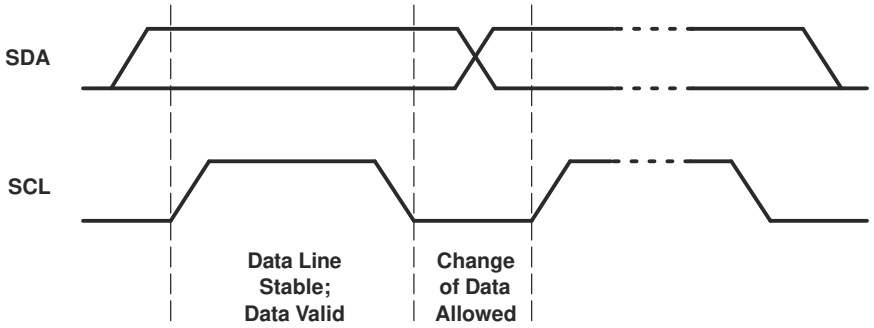

图 8-1. Bit Transfer

Both data and clock lines remain high when the bus is not busy. A high-to-low transition of the data line while the clock is high is defined as the start condition (S). A low-to-high transition of the data line while the clock is high is defined as the stop condition (P) (see 图 8-2).

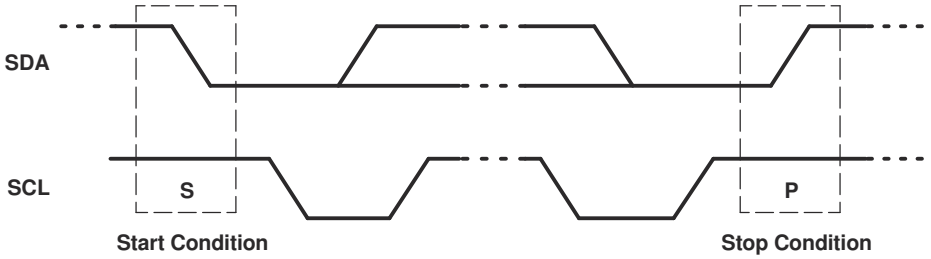

图 8-2. Definition of Start and Stop Conditions

A device generating a message is a transmitter; a device receiving a message is the receiver. The device that controls the message is the master, and the devices that are controlled by the master are the slaves (see 图 8-3).

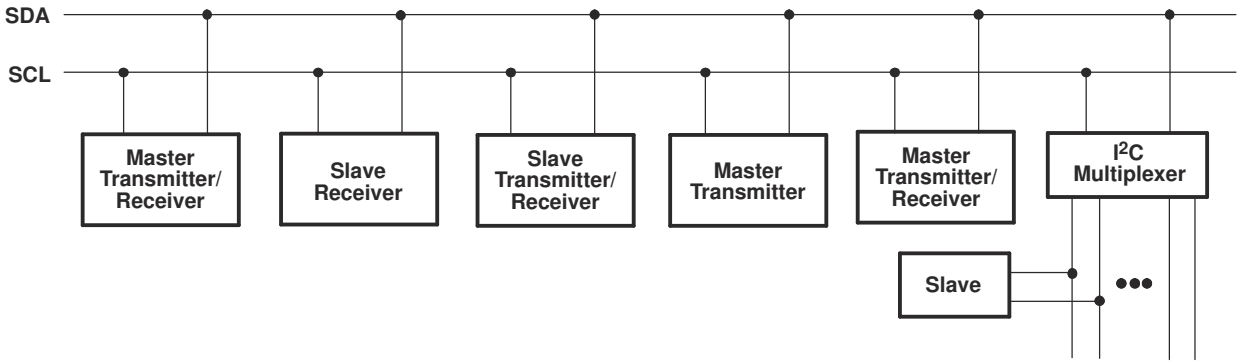

图 8-3. System Configuration

The number of data bytes transferred between the start and the stop conditions from transmitter to receiver is not limited. Each byte of eight bits is followed by one acknowledge (ACK) bit. The transmitter must release the SDA line before the receiver can send an ACK bit.

When a slave receiver is addressed, it must generate an ACK after the reception of each byte. Also, a master must generate an ACK after the reception of each byte that has been clocked out of the slave transmitter. The device that acknowledges must pull down the SDA line during the ACK clock pulse so that the SDA line is stable low during the high pulse of the ACK-related clock period (see 图 8-4). Setup and hold times must be taken into account.

Copyright © 2021 Texas Instruments Incorporated

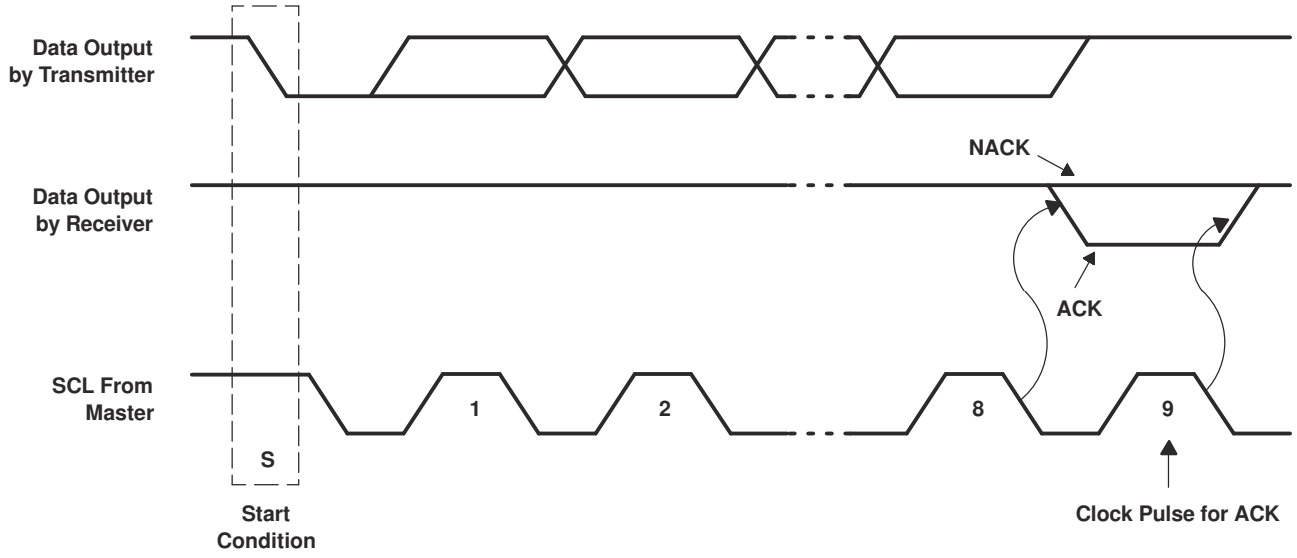

图 8-4. Acknowledgment on the I²C Bus

A master receiver must signal an end of data to the transmitter by not generating an acknowledge (NACK) after the last byte has been clocked out of the slave. This is done by the master receiver by holding the SDA line high. In this event, the transmitter must release the data line to enable the master to generate a stop condition.

Data is transmitted to the PCA9545A control register using the write mode shown in 图 8-5.

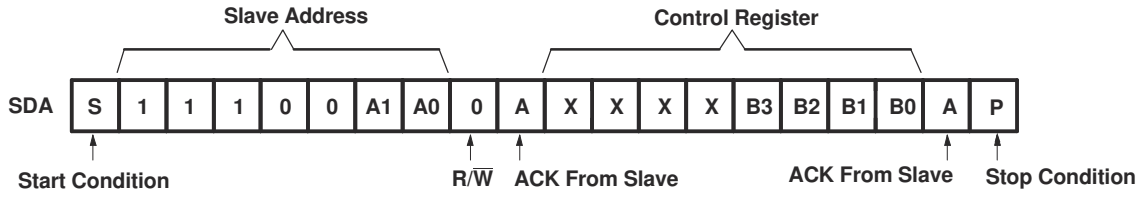

图 8-5. Write Control Register

Data is read from the PCA9545A control register using the read mode shown in 图 8-6.

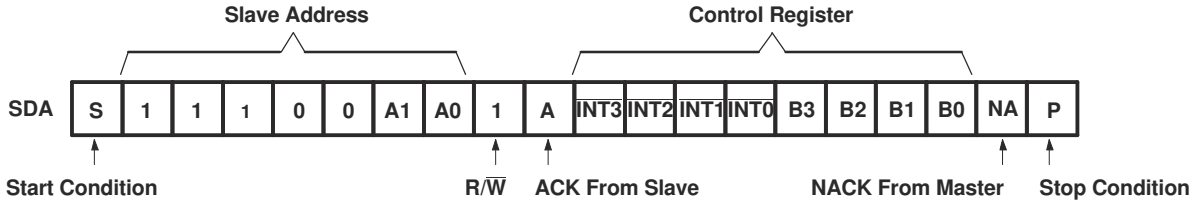

图 8-6. Read Control Register

Copyright © 2021 Texas Instruments Incorporated

8.6 Control Register

8.6.1 Device Address

Following a start condition, the bus master must output the address of the slave it is accessing. The address of the PCA9545A is shown in 图 8-7. To conserve power, no internal pull-up resistors are incorporated on the hardware-selectable address terminals, and they must be pulled high or low.

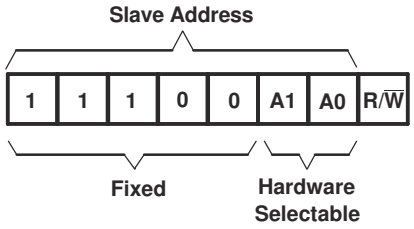

图 8-7. PCA9545A Address

The last bit of the slave address defines the operation to be performed. When set to a logic 1, a read is selected, while a logic 0 selects a write operation.

8.6.2 Control Register Description

Following the successful acknowledgment of the slave address, the bus master sends a byte to the PCA9545A, which is stored in the control register (see 图 8-8). If multiple bytes are received by the PCA9545A, it saves the last byte received. This register can be written and read via the I^2C bus.

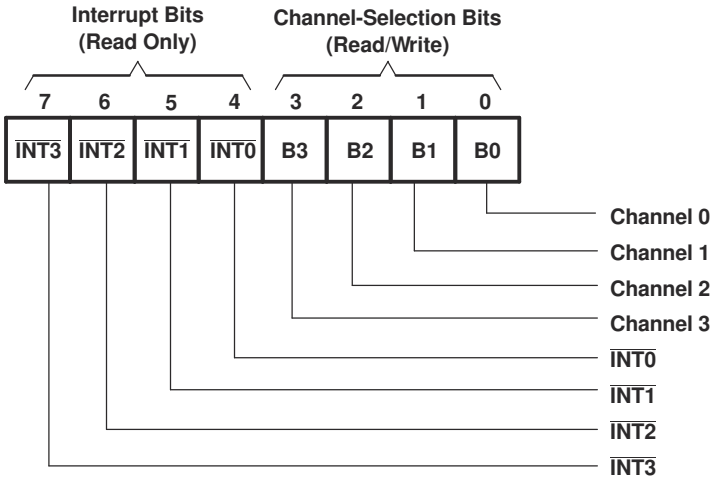

图 8-8. Control Register

8.6.3 Control Register Definition

One or several SCn/SDn downstream pairs, or channels, are selected by the contents of the control register (see 表 8-1). After the PCA9545A has been addressed, the control register is written. The four LSBs of the control byte are used to determine which channel or channels are to be selected. When a channel is selected, the channel becomes active after a stop condition has been placed on the I^2C bus. This ensures that all SCn/SDn lines are in a high state when the channel is made active, so that no false conditions are generated at the time of connection. A stop condition must occur always right after the acknowledge cycle.

表 8-1. Control Register Write (Channel Selection), Control Register Read (Channel Status)(1)

INT3	INT2	INT1	INT0	B3	B2	B1	B0	COMMAND
X	X	X	X	X	X	X	0	Channel 0 disabled
							1	Channel 0 enabled

Copyright © 2021 Texas Instruments Incorporated

表 8-1. Control Register Write (Channel Selection), Control Register Read (Channel Status)(1) (continued)

$\overline{INT3}$	$\overline{INT2}$	$\overline{INT1}$	$\overline{INT0}$	B3	B2	B1	B0	COMMAND
X	X	X	X	X	X	0	X	Channel 1 disabled
						1		Channel 1 enabled
X	X	X	X	X	0	X	X	Channel 2 disabled
					1			Channel 2 enabled
X	X	X	X	0	X	X	X	Channel 3 disabled
				1				Channel 3 enabled
0	0	0	0	0	0	X	0	No channel selected, power-up/reset default state

(1) Several channels can be enabled at the same time. For example, B3 = 0, B2 = 1, B1 = 1, B0 = 0 means that channels 0 and 3 are disabled, and channels 1 are 2 and enabled. Care should be taken not to exceed the maximum bus capacity.

8.6.4 Interrupt Handling

The PCA9545A provides four interrupt inputs (one for each channel) and one open-drain interrupt output (see 表 8-2). When an interrupt is generated by any device, it is detected by the PCA9545A and the interrupt output is driven low. The channel does not need to be active for detection of the interrupt. A bit also is set in the control register.

Bits 4 – 7 of the control register correspond to channels 0 – 3 of the PCA9545A, respectively. Therefore, if an interrupt is generated by any device connected to channel 1, the state of the interrupt inputs is loaded into the control register when a read is accomplished. Likewise, an interrupt on any device connected to channel 0 would cause bit 4 of the control register to be set on the read. The master then can address the PCA9545A and read the contents of the control register to determine which channel contains the device generating the interrupt. The master then can reconfigure the PCA9545A to select this channel and locate the device generating the interrupt and clear it.

It should be noted that more than one device can provide an interrupt on a channel, so it is up to the master to ensure that all devices on a channel are interrogated for an interrupt.

The interrupt inputs can be used as general-purpose inputs if the interrupt function is not required.

If unused, interrupt input(s) must be connected to V_{CC}.

表 8-2. Control Register Read (Interrupt)(1)

$\overline{INT3}$	$\overline{INT2}$	$\overline{INT1}$	$\overline{INT0}$	B3	B2	B1	B0	COMMAND
X	X	X	0	X	X	X	X	No interrupt on channel 0
			1					Interrupt on channel 0
X	X	0	X	X	X	X	X	No interrupt on channel 1
		1						Interrupt on channel 1
X	0	X	X	X	X	X	X	No interrupt on channel 2
	1							Interrupt on channel 2
0	X	X	X	X	X	X	X	No interrupt on channel 3
1								Interrupt on channel 3

(1) Several interrupts can be active at the same time. For example, $\overline{INT3}$ = 0, $\overline{INT2}$ = 1, $\overline{INT1}$ = 1, $\overline{INT0}$ = 0 means that there is no interrupt on channels 0 and 3, and there is interrupt on channels 1 and 2.

Copyright © 2021 Texas Instruments Incorporated

9 Application Information Disclaimer

Note

Information in the following applications sections is not part of the TI component specification, and TI does not warrant its accuracy or completeness. TI's customers are responsible for determining suitability of components for their purposes, as well as validating and testing their design implementation to confirm system functionality.

9.1 Application Information

Applications of the PCA9545A will contain an I^2C (or SMBus) master device and up to four I^2C slave devices. The downstream channels are ideally used to resolve I^2C slave address conflicts. For example, if four identical digital temperature sensors are needed in the application, one sensor can be connected at each channel: 0, 1, 2, and 3. When the temperature at a specific location needs to be read, the appropriate channel can be enabled and all other channels switched off, the data can be retrieved, and the I^2C master can move on and read the next channel.

In an application where the I^2C bus will contain many additional slave devices that do not result in I^2C slave address conflicts, these slave devices can be connected to any desired channel to distribute the total bus capacitance across multiple channels. If multiple switches will be enabled simultaneously, additional design requirements must be considered (See *Design Requirements* and *Detailed Design Procedure*).

9.2 Typical Application

A typical application of the PCA9545A will contain anywhere from 1 to 5 separate data pull-up voltages, V_{DPUX}, one for the master device (V_{DPUM}) and one for each of the selectable slave channels (V_{DPU0} – V_{DPU3}). In the event where the master device and all slave devices operate at the same voltage, then the pass voltage, V_{pass} = V_{DPUX}. Once the maximum V_{pass} is known, V_{cc} can be selected using Pass-Gate Voltage (V_{pass}) vs Supply Voltage (V_{CC}) at Three Temperature Points. In an application where voltage translation is necessary, additional design requirements must be considered (See *Design Requirements*).

图 9-1 shows an application in which the PCA9545A can be used.

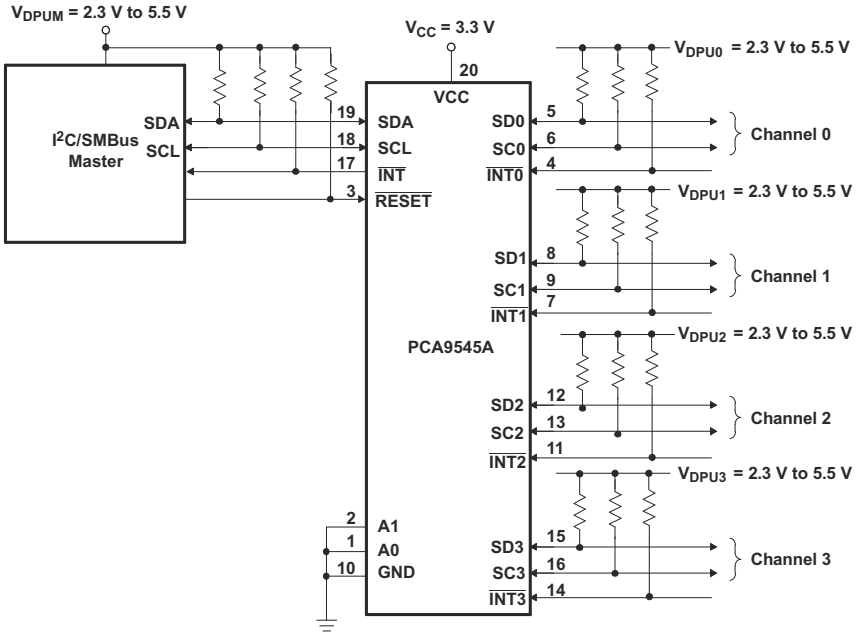

图 9-1. Typical Application Schematic

9.2.1 Design Requirements

The pull-up resistors on the $\overline{INT3}$- $\overline{INT0}$ terminals in the application schematic are not required in all applications. If the device generating the interrupt has an open-drain output structure or can be tri-stated, a pull-up resistor is required. If the device generating the interrupt has a push-pull output structure and cannot be tri-stated, a pull-up resistor is not required. The interrupt inputs should not be left floating in the application.

The A0 and A1 terminals are hardware selectable to control the slave address of the PCA9545A. These terminals may be tied directly to GND or V_{CC} in the application.

If multiple slave channels will be activated simultaneously in the application, then the total I_{OL} from SCL/SDA to GND on the master side will be the sum of the currents through all pull-up resistors, R_p.

The pass-gate transistors of the PCA9545A are constructed such that the V_{CC} voltage can be used to limit the maximum voltage that is passed from one I^2C bus to another.

Pass-Gate Voltage (V_{pass}) vs Supply Voltage (V_{CC}) at Three Temperature Points shows the voltage characteristics of the pass-gate transistors (note that the graph was generated using data specified in the *Electrical Characteristics* section of this data sheet). In order for the PCA9545A to act as a voltage translator, the V_{pass} voltage must be equal to or lower than the lowest bus voltage. For example, if the main bus is running at 5 V and the downstream buses are 3.3 V and 2.7 V, V_{pass} must be equal to or below 2.7 V to effectively clamp the downstream bus voltages. As shown in Pass-Gate Voltage (V_{pass}) vs Supply Voltage (V_{CC}) at Three Temperature Points, $V_{pass(max)}$ is 2.7 V when the PCA9545A supply voltage is 4 V or lower, so the PCA9545A supply voltage could be set to 3.3 V. Pull-up resistors then can be used to bring the bus voltages to their appropriate levels (see 图 9-1).

9.2.2 Detailed Design Procedure

Once all the slaves are assigned to the appropriate slave channels and bus voltages are identified, the pull-up resistors, R_p, for each of the buses need to be selected appropriately. The minimum pull-up resistance is a function of V_{DPUX}, $V_{OL,(max)}$, and I_{OL}:

$$R_{p(min)} = \frac{V_{DPUX} - V_{OL(max)}}{I_{OL}} \quad (1)$$

The maximum pull-up resistance is a function of the maximum rise time, t_r (300 ns for fast-mode operation, f_{SCL} = 400 kHz) and bus capacitance, C_b:

$$R_{p(max)} = \frac{t_r}{0.8473 \times C_b} \quad (2)$$

The maximum bus capacitance for an I^2C bus must not exceed 400 pF for fast-mode operation. The bus capacitance can be approximated by adding the capacitance of the PCA9545A, $C_{io(OFF)}$, the capacitance of wires/connections/traces, and the capacitance of each individual slave on a given channel. If multiple channels will be activated simultaneously, each of the slaves on all channels will contribute to total bus capacitance.

Copyright © 2021 Texas Instruments Incorporated

9.2.3 Application Curves

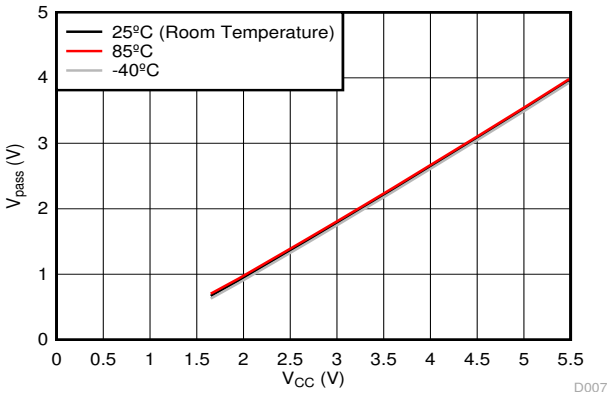

图 9-2. Pass-Gate Voltage (V_{pass}) vs Supply Voltage (V_{CC}) at Three Temperature Points

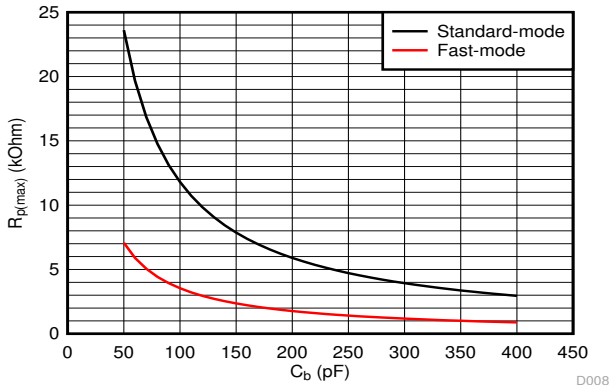

Standard-mode (f_{SCL}= 100 kHz, t_r = 1 µs)

Fast-mode (f_{SCL}= 400 kHz, t_r= 300 ns)

图 9-3. Maximum Pull-up resistance ($R_{p(max)}$) vs Bus Capacitance (C_b)

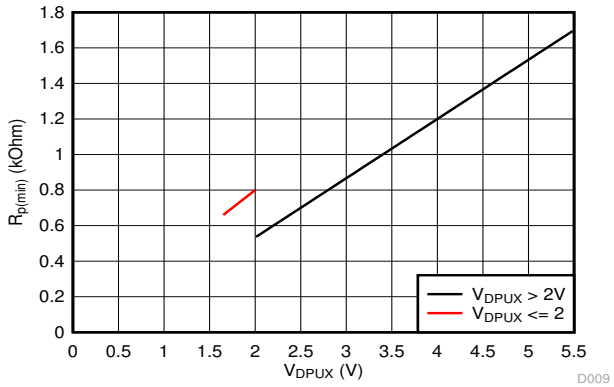

V_{OL} = 0.2*V_{DPUX}, I_{OL} = 2 mA when $V_{DPUX} \leqslant$ 2 V

V_{OL} = 0.4 V, I_{OL} = 3 mA when V_{DPUX} > 2 V

图 9-4. Minimum Pull-up Resistance ($R_{p(min)}$) vs Pull-up Reference Voltage (V_{DPUX})

Copyright © 2021 Texas Instruments Incorporated

10 Power Supply Recommendations

10.1 Power-On Reset Requirements

In the event of a glitch or data corruption, PCA9545A can be reset to its default conditions by using the power-on reset feature. Power-on reset requires that the device go through a power cycle to be completely reset. This reset also happens when the device is powered on for the first time in an application.

The two types of power-on reset are shown in 图 10-1 and 图 10-2.

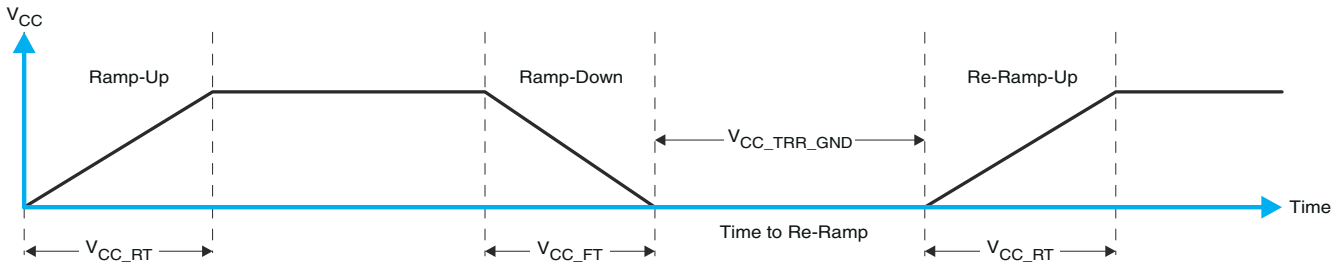

图 10-1. V_{CC} Is Lowered Below 0.2 V Or 0 V And Then Ramped Up To V_{CC}

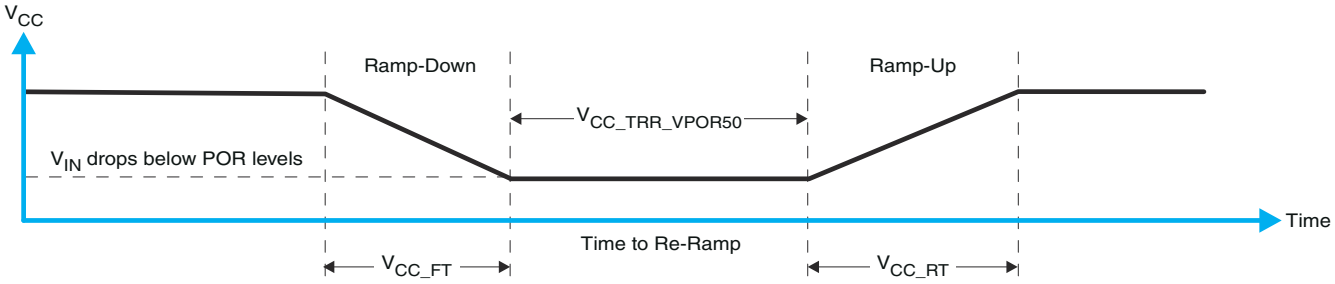

图 10-2. V_{CC} Is Lowered Below The Por Threshold, Then Ramped Back Up To V_{CC}

表 10-1 specifies the performance of the power-on reset feature for PCA9545A for both types of power-on reset.

表 10-1. Recommended Supply Sequencing And Ramp Rates(1)

PARAMETER			MIN	TYP	MAX	UNIT
V_{CC_FT}	Fall rate	See 图 10-1	1		100	ms
V_{CC_RT}	Rise rate	See 图 10-1	0.01		100	ms
$V_{CC_TRR_GND}$	Time to re-ramp (when V_{CC} drops to GND)	See 图 10-1	0.001			ms
$V_{CC_TRR_POR50}$	Time to re-ramp (when V_{CC} drops to V_{POR_MIN} – 50 mV)	See 图 10-2	0.001			ms
V_{CC_GH}	Level that V_{CCP} can glitch down to, but not cause a functional disruption when V_{CCX_GW} = 1 μs	See 图 10-3			1.2	V
V_{CC_GW}	Glitch width that will not cause a functional disruption when V_{CCX_GH} = 0.5 × V_{CCx}	See 图 10-3				μs
V_{PORF}	Voltage trip point of POR on falling V_{CC}		0.767		1.144	V
V_{PORR}	Voltage trip point of POR on rising V_{CC}		1.033		1.428	V

(1) T_A = –40°C to 85°C (unless otherwise noted)

Glitches in the power supply can also affect the power-on reset performance of this device. The glitch width (V_{CC_GW}) and height (V_{CC_GH}) are dependent on each other. The bypass capacitance, source impedance, and the device impedance are factors that affect power-on reset performance. 图 10-3 and 表 10-1 provide more information on how to measure these specifications.

Copyright © 2021 Texas Instruments Incorporated

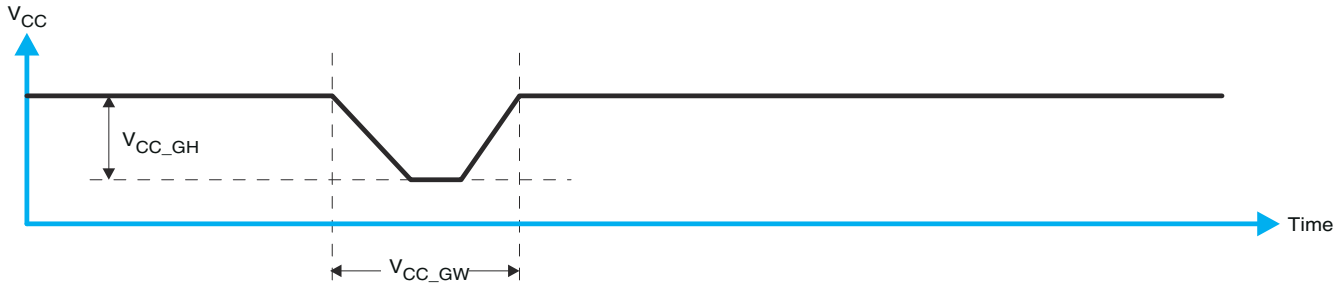

图 10-3. Glitch Width And Glitch Height

V_{POR} is critical to the power-on reset. V_{POR} is the voltage level at which the reset condition is released and all the registers and the I^2C/SMBus state machine are initialized to their default states. The value of V_{POR} differs based on the V_{CC} being lowered to or from 0. 图 10-4 and 表 10-1 provide more details on this specification.

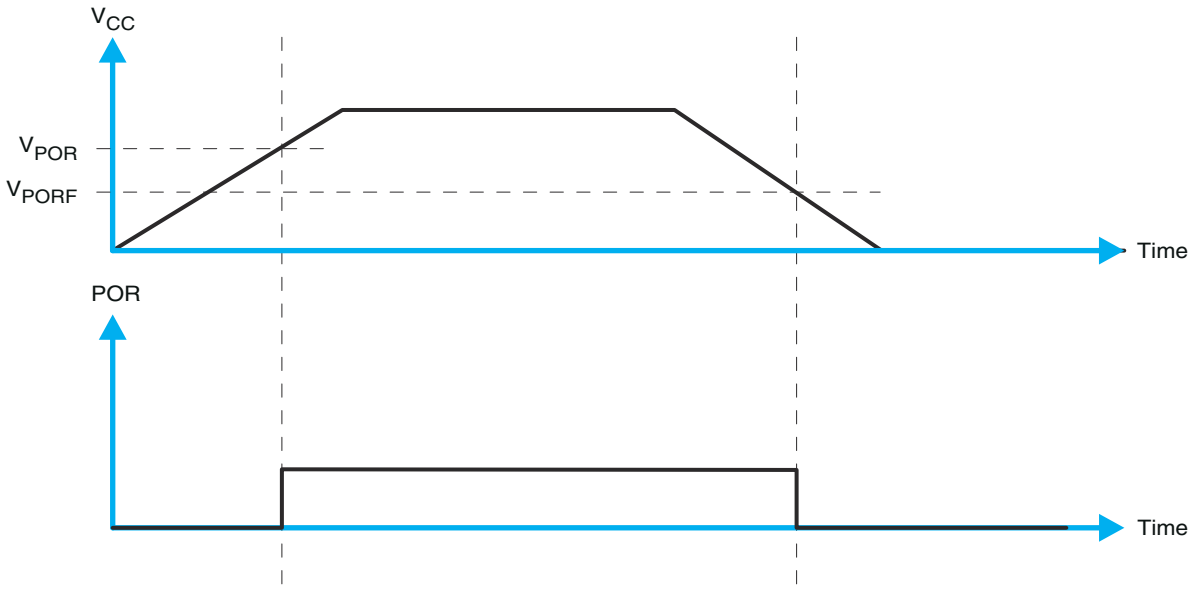

图 10-4. V_{POR}

11 Layout

11.1 Layout Guidelines

For PCB layout of the PCA9545A, common PCB layout practices should be followed but additional concerns related to high-speed data transfer such as matched impedances and differential pairs are not a concern for I^2C signal speeds. It is common to have a dedicated ground plane on an inner layer of the board and terminals that are connected to ground should have a low-impedance path to the ground plane in the form of wide polygon pours and multiple vias. By-pass and de-coupling capacitors are commonly used to control the voltage on the VCC terminal, using a larger capacitor to provide additional power in the event of a short power supply glitch and a smaller capacitor to filter out high-frequency ripple.

In an application where voltage translation is not required, all V_{DPUX} voltages and V_{CC} could be at the same potential and a single copper plane could connect all of pull-up resistors to the appropriate reference voltage. In an application where voltage translation is required, V_{DPUM}, V_{DPU0}, V_{DPU1}, V_{DPU2}, and V_{DPU3} may all be on the same layer of the board with split planes to isolate different voltage potentials.

To reduce the total I^2C bus capacitance added by PCB parasitics, data lines (SCn, SDn and $\overline{INT}$n) should be a short as possible and the widths of the traces should also be minimized (e.g. 5-10 mils depending on copper weight).

11.2 Layout Example

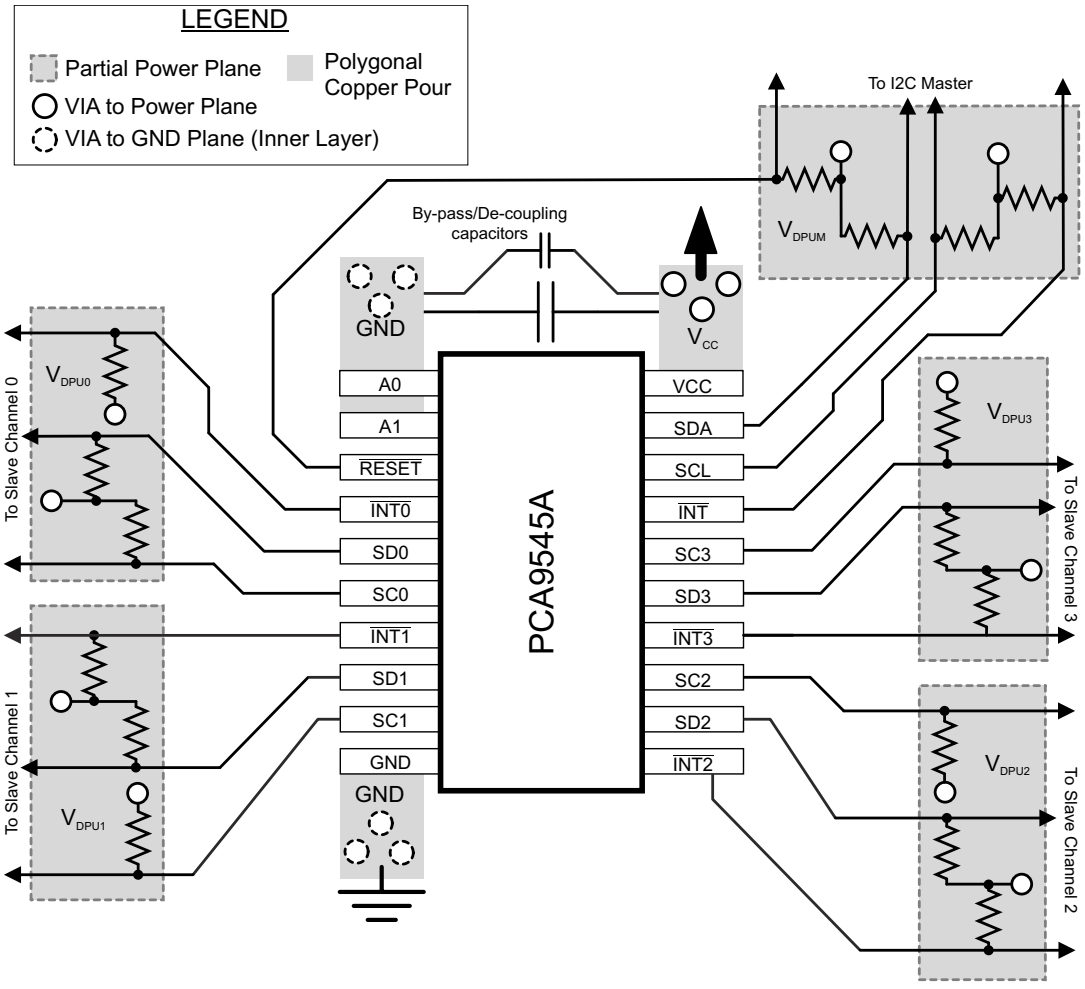

Copyright © 2021 Texas Instruments Incorporated

12 Device and Documentation Support

12.1 Receiving Notification of Documentation Updates

To receive notification of documentation updates, navigate to the device product folder on ti.com. Click on *Subscribe to updates* to register and receive a weekly digest of any product information that has changed. For change details, review the revision history included in any revised document.

12.2 Support Resources

TI E2E™ support forums are an engineer's go-to source for fast, verified answers and design help — straight from the experts. Search existing answers or ask your own question to get the quick design help you need.

Linked content is provided "AS IS" by the respective contributors. They do not constitute TI specifications and do not necessarily reflect TI's views; see TI's Terms of Use.

12.3 Trademarks

TI E2E™ is a trademark of Texas Instruments.
所有商标均为其各自所有者的财产。

12.4 Electrostatic Discharge Caution



This integrated circuit can be damaged by ESD. Texas Instruments recommends that all integrated circuits be handled with appropriate precautions. Failure to observe proper handling and installation procedures can cause damage.

ESD damage can range from subtle performance degradation to complete device failure. Precision integrated circuits may be more susceptible to damage because very small parametric changes could cause the device not to meet its published specifications.

12.5 Glossary

TI Glossary	This glossary lists and explains terms, acronyms, and definitions.

13 Mechanical, Packaging, and Orderable Information

The following pages include mechanical, packaging, and orderable information. This information is the most current data available for the designated devices. This data is subject to change without notice and revision of this document. For browser-based versions of this data sheet, refer to the left-hand navigation.

Copyright © 2021 Texas Instruments Incorporated

PACKAGING INFORMATION

Orderable part number	Status (1)	Material type (2)	Package | Pins	Package qty | Carrier	RoHS (3)	Lead finish/ Ball material (4)	MSL rating/ Peak reflow (5)	Op temp (°C)	Part marking (6)
PCA9545ADW	NRND	Production	SOIC (DW) | 20	25 | TUBE	Yes	NIPDAU	Level-1-260C-UNLIM	-40 to 85	PCA9545A
PCA9545ADW.A	NRND	Production	SOIC (DW) | 20	25 | TUBE	Yes	NIPDAU	Level-1-260C-UNLIM	-40 to 85	PCA9545A
PCA9545ADWR	NRND	Production	SOIC (DW) | 20	2000 | LARGE T&R	Yes	NIPDAU	Level-1-260C-UNLIM	-40 to 85	PCA9545A
PCA9545ADWR.A	NRND	Production	SOIC (DW) | 20	2000 | LARGE T&R	Yes	NIPDAU	Level-1-260C-UNLIM	-40 to 85	PCA9545A
PCA9545APWR	Active	Production	TSSOP (PW) | 20	2000 | LARGE T&R	Yes	NIPDAU	Level-1-260C-UNLIM	-40 to 85	PD545A
PCA9545APWR.B	Active	Production	TSSOP (PW) | 20	2000 | LARGE T&R	Yes	NIPDAU	Level-1-260C-UNLIM	-40 to 85	PD545A
PCA9545ARGYR	Active	Production	VQFN (RGY) | 20	3000 | LARGE T&R	Yes	SN	Level-2-260C-1 YEAR	-40 to 85	PD545A
PCA9545ARGYR.B	Active	Production	VQFN (RGY) | 20	3000 | LARGE T&R	Yes	SN	Level-2-260C-1 YEAR	-40 to 85	PD545A
PCA9545ARGYRG4	Active	Production	VQFN (RGY) | 20	3000 | LARGE T&R	Yes	NIPDAU	Level-2-260C-1 YEAR	-40 to 85	PD545A
PCA9545ARGYRG4.B	Active	Production	VQFN (RGY) | 20	3000 | LARGE T&R	Yes	NIPDAU	Level-2-260C-1 YEAR	-40 to 85	PD545A

(1) **Status:** For more details on status, see our product life cycle.

(2) **Material type:** When designated, preproduction parts are prototypes/experimental devices, and are not yet approved or released for full production. Testing and final process, including without limitation quality assurance, reliability performance testing, and/or process qualification, may not yet be complete, and this item is subject to further changes or possible discontinuation. If available for ordering, purchases will be subject to an additional waiver at checkout, and are intended for early internal evaluation purposes only. These items are sold without warranties of any kind.

(3) **RoHS values:** Yes, No, RoHS Exempt. See the TI RoHS Statement for additional information and value definition.

(4) **Lead finish/Ball material:** Parts may have multiple material finish options. Finish options are separated by a vertical ruled line. Lead finish/Ball material values may wrap to two lines if the finish value exceeds the maximum column width.

(5) **MSL rating/Peak reflow:** The moisture sensitivity level ratings and peak solder (reflow) temperatures. In the event that a part has multiple moisture sensitivity ratings, only the lowest level per JEDEC standards is shown. Refer to the shipping label for the actual reflow temperature that will be used to mount the part to the printed circuit board.

(6) **Part marking:** There may be an additional marking, which relates to the logo, the lot trace code information, or the environmental category of the part.

Multiple part markings will be inside parentheses. Only one part marking contained in parentheses and separated by a "~" will appear on a part. If a line is indented then it is a continuation of the previous line and the two combined represent the entire part marking for that device.

Important Information and Disclaimer: The information provided on this page represents TI's knowledge and belief as of the date that it is provided. TI bases its knowledge and belief on information provided by third parties, and makes no representation or warranty as to the accuracy of such information. Efforts are underway to better integrate information from third parties. TI has taken and continues to take reasonable steps to provide representative

and accurate information but may not have conducted destructive testing or chemical analysis on incoming materials and chemicals. TI and TI suppliers consider certain information to be proprietary, and thus CAS numbers and other limited information may not be available for release.

In no event shall TI's liability arising out of such information exceed the total purchase price of the TI part(s) at issue in this document sold by TI to Customer on an annual basis.

TAPE AND REEL INFORMATION

REEL DIMENSIONS

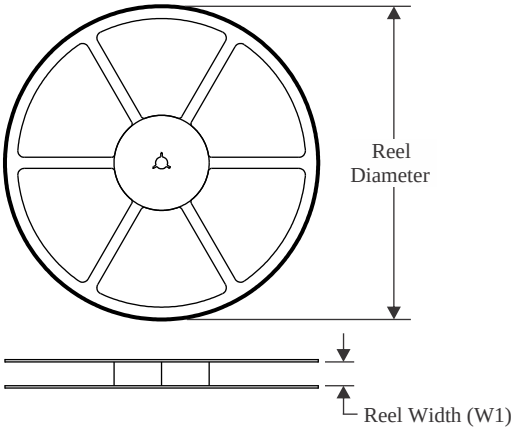

TAPE DIMENSIONS

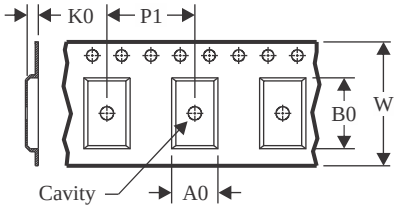

A0	Dimension designed to accommodate the component width
B0	Dimension designed to accommodate the component length
K0	Dimension designed to accommodate the component thickness
W	Overall width of the carrier tape
P1	Pitch between successive cavity centers

QUADRANT ASSIGNMENTS FOR PIN 1 ORIENTATION IN TAPE

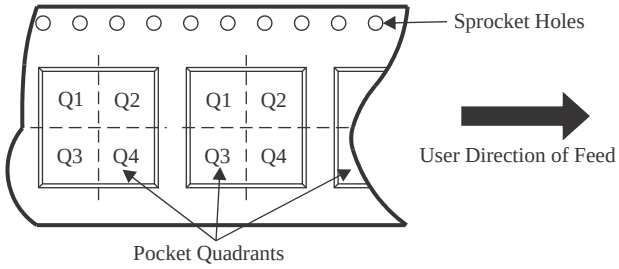

*All dimensions are nominal

Device	Package Type	Package Drawing	Pins	SPQ	Reel Diameter (mm)	Reel Width W1 (mm)	A0 (mm)	B0 (mm)	K0 (mm)	P1 (mm)	W (mm)	Pin1 Quadrant
PCA9545ADWR	SOIC	DW	20	2000	330.0	24.4	10.8	13.3	2.7	12.0	24.0	Q1
PCA9545APWR	TSSOP	PW	20	2000	330.0	16.4	6.95	7.0	1.4	8.0	16.0	Q1
PCA9545ARGYR	VQFN	RGY	20	3000	330.0	12.4	3.71	4.71	1.1	8.0	12.0	Q1
PCA9545ARGYRG4	VQFN	RGY	20	3000	330.0	12.4	3.71	4.71	1.1	8.0	12.0	Q1

TAPE AND REEL BOX DIMENSIONS

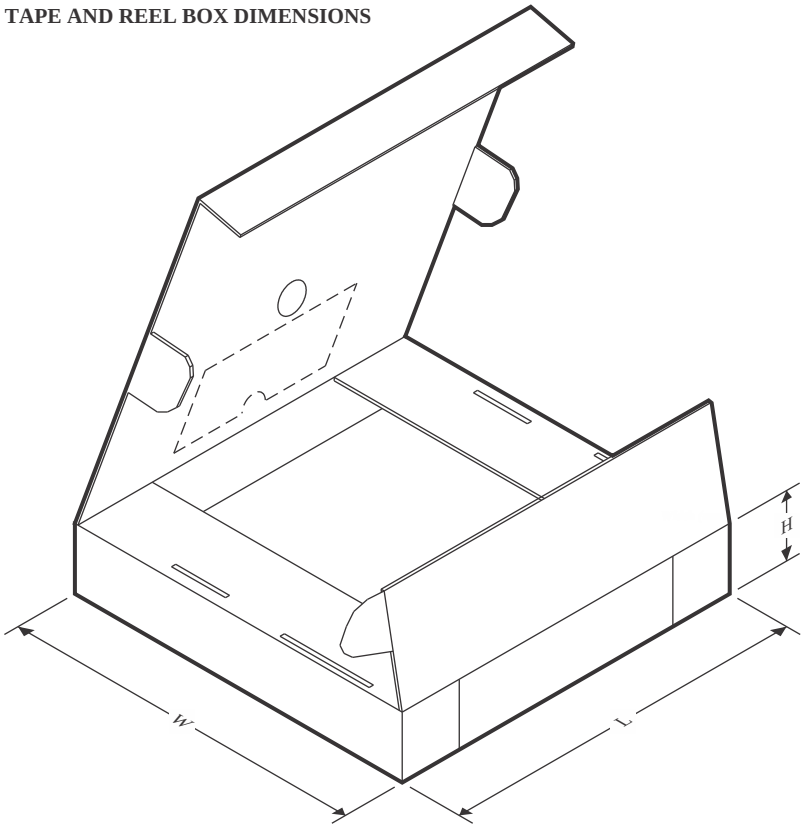

*All dimensions are nominal

Device	Package Type	Package Drawing	Pins	SPQ	Length (mm)	Width (mm)	Height (mm)
PCA9545ADWR	SOIC	DW	20	2000	356.0	356.0	45.0
PCA9545APWR	TSSOP	PW	20	2000	353.0	353.0	32.0
PCA9545ARGYR	VQFN	RGY	20	3000	367.0	367.0	35.0
PCA9545ARGYRG4	VQFN	RGY	20	3000	367.0	367.0	35.0

TUBE

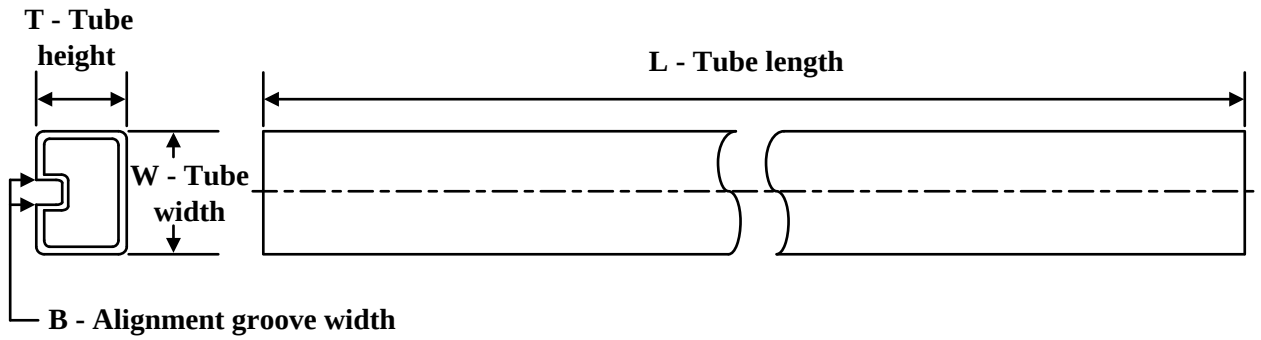

*All dimensions are nominal

Device	Package Name	Package Type	Pins	SPQ	L (mm)	W (mm)	T (µm)	B (mm)
PCA9545ADW	DW	SOIC	20	25	507	12.83	5080	6.6
PCA9545ADW.A	DW	SOIC	20	25	507	12.83	5080	6.6

GENERIC PACKAGE VIEW

RGY 20

VQFN - 1 mm max height

3.5 x 4.5, 0.5 mm pitch

PLASTIC QUAD FGLATPACK - NO LEAD

This image is a representation of the package family, actual package may vary.
Refer to the product data sheet for package details.

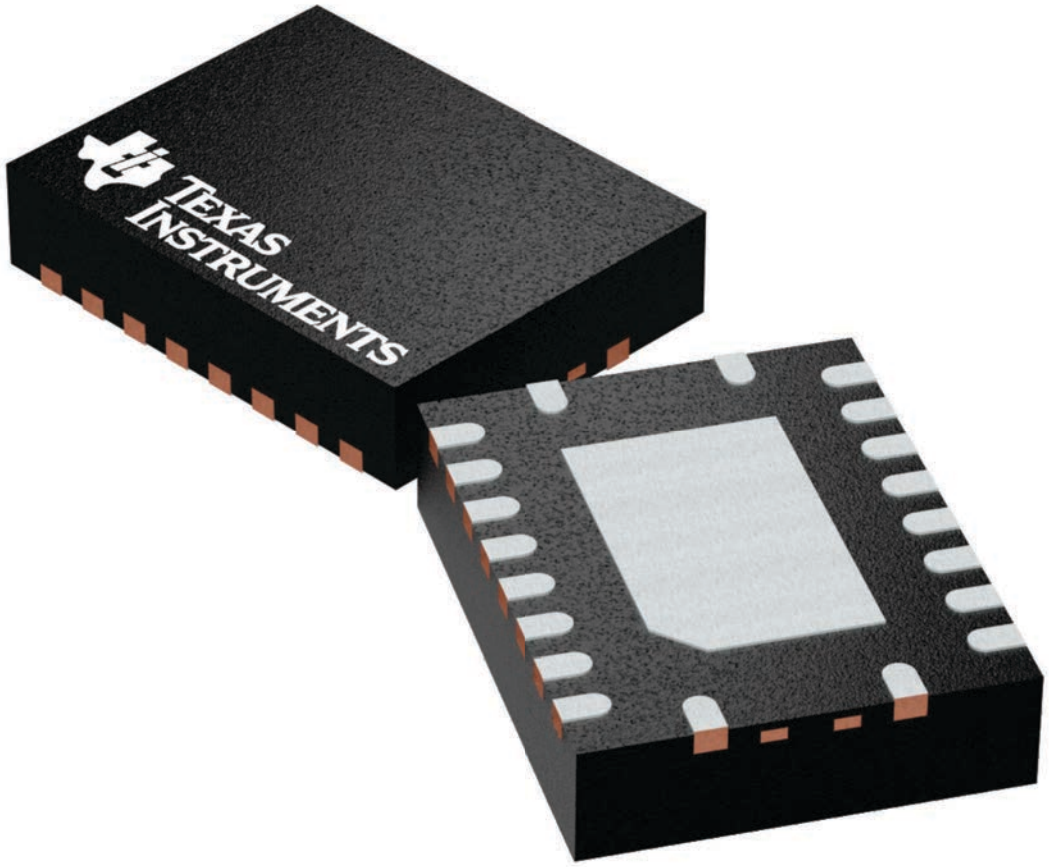

4225264/A

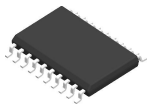

PACKAGE OUTLINE

DW0020A

SOIC - 2.65 mm max height

SOIC

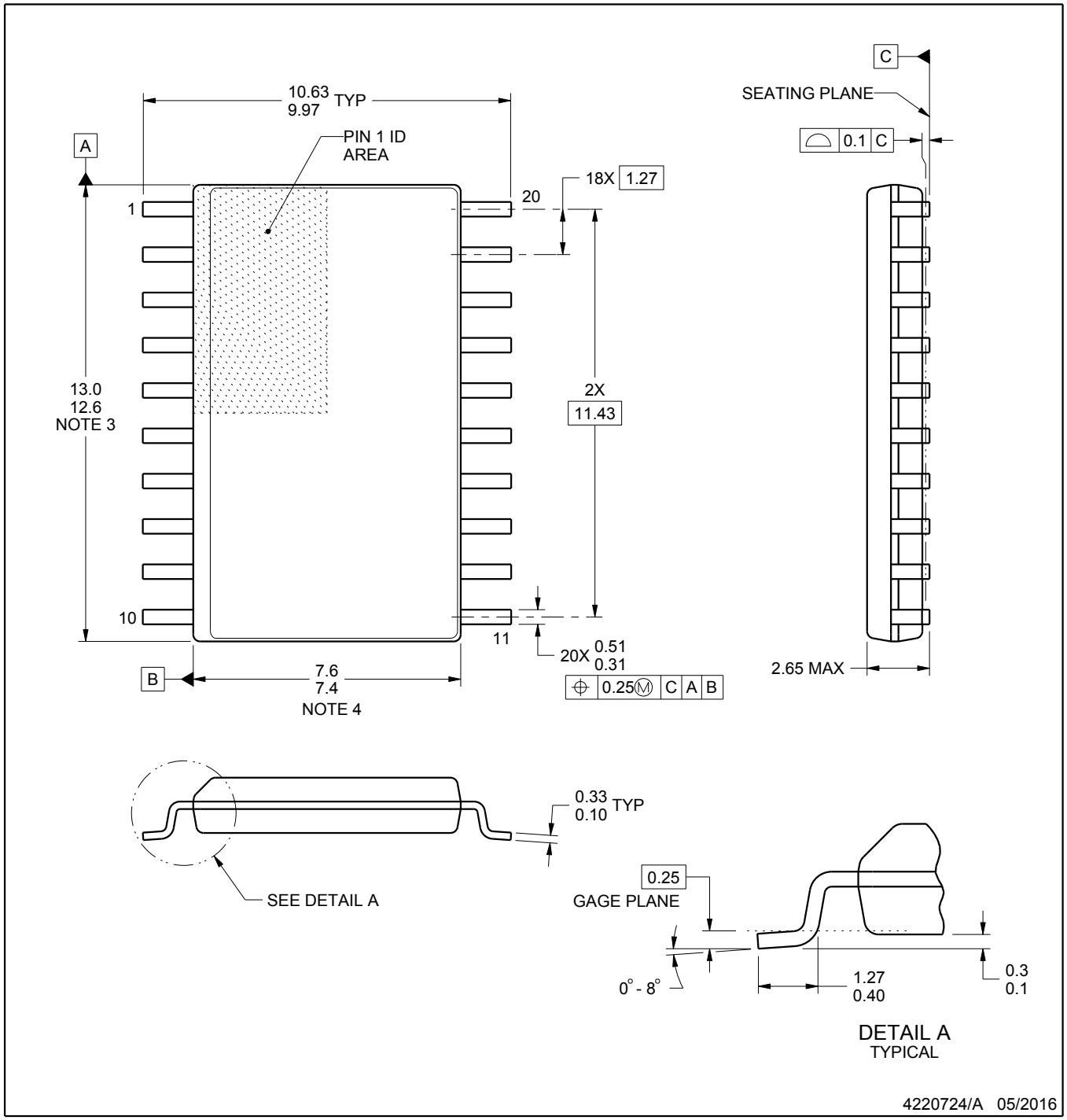

NOTES:

1. All linear dimensions are in millimeters. Dimensions in parenthesis are for reference only. Dimensioning and tolerancing per ASME Y14.5M.
2. This drawing is subject to change without notice.
3. This dimension does not include mold flash, protrusions, or gate burrs. Mold flash, protrusions, or gate burrs shall not exceed 0.15 mm per side.
4. This dimension does not include interlead flash. Interlead flash shall not exceed 0.43 mm per side.
5. Reference JEDEC registration MS-013.

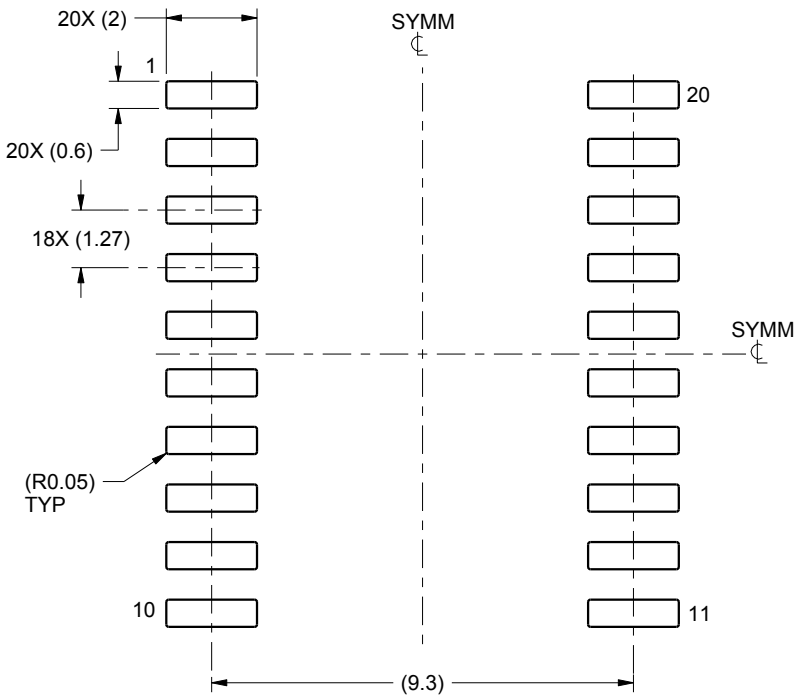

LAND PATTERN EXAMPLE
SCALE:6X

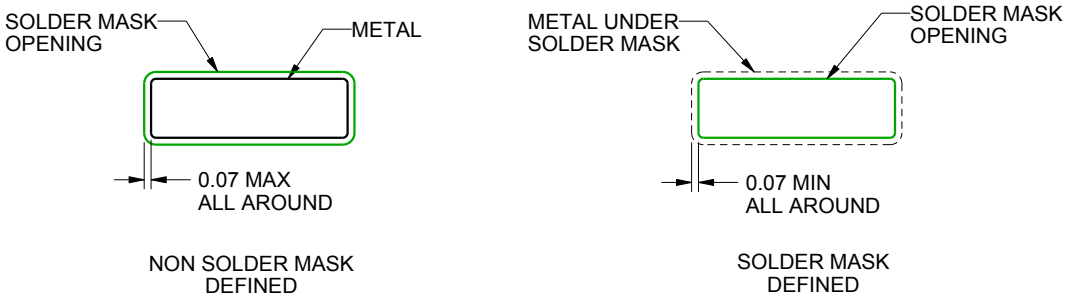

SOLDER MASK DETAILS

4220724/A 05/2016

NOTES: (continued)

6. Publication IPC-7351 may have alternate designs.
7. Solder mask tolerances between and around signal pads can vary based on board fabrication site.

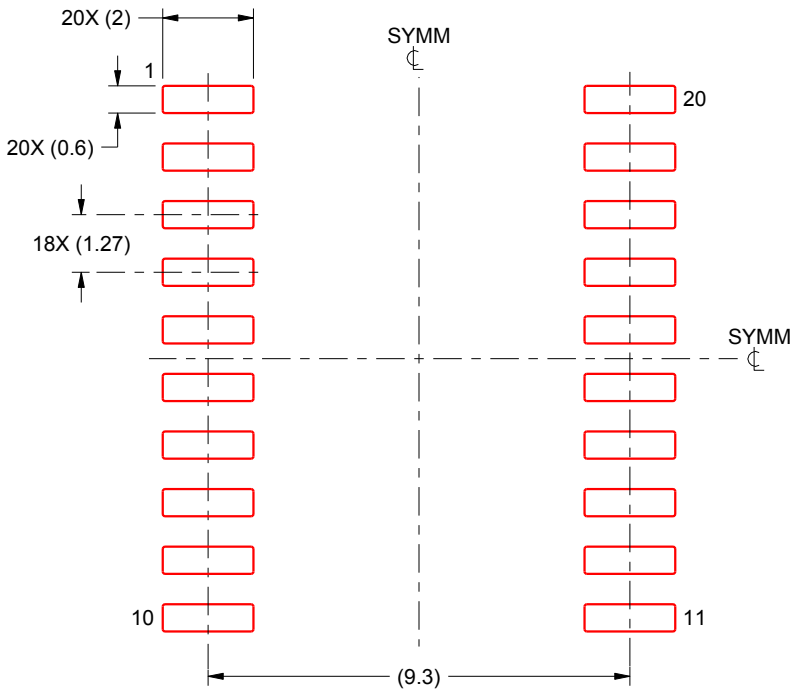

SOLDER PASTE EXAMPLE
BASED ON 0.125 mm THICK STENCIL
SCALE:6X

4220724/A 05/2016

NOTES: (continued)

8. Laser cutting apertures with trapezoidal walls and rounded corners may offer better paste release. IPC-7525 may have alternate design recommendations.
9. Board assembly site may have different recommendations for stencil design.

PACKAGE OUTLINE

PW0020A

TSSOP - 1.2 mm max height

SMALL OUTLINE PACKAGE

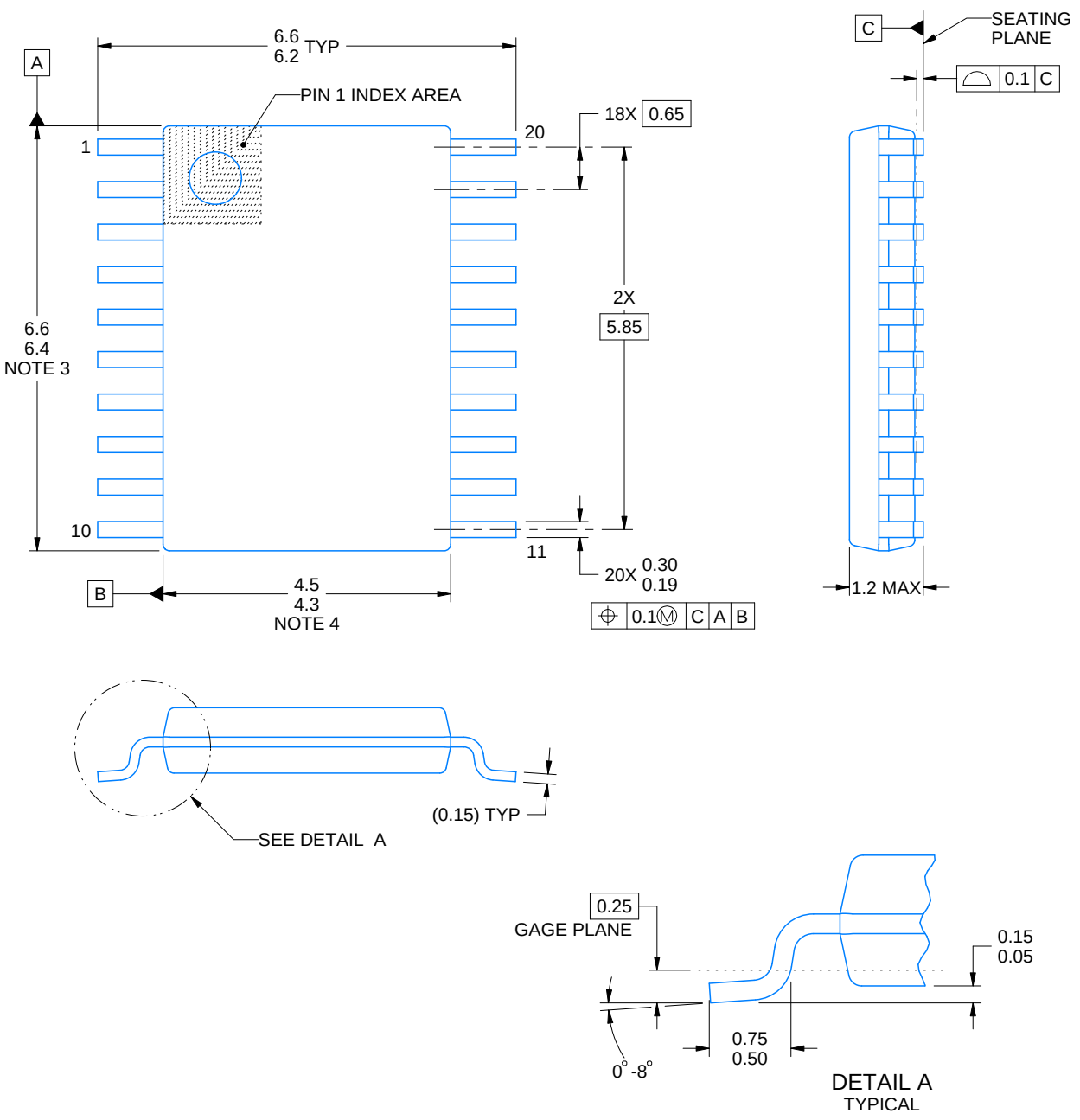

NOTES:

1. All linear dimensions are in millimeters. Any dimensions in parenthesis are for reference only. Dimensioning and tolerancing per ASME Y14.5M.
2. This drawing is subject to change without notice.
3. This dimension does not include mold flash, protrusions, or gate burrs. Mold flash, protrusions, or gate burrs shall not exceed 0.15 mm per side.
4. This dimension does not include interlead flash. Interlead flash shall not exceed 0.25 mm per side.
5. Reference JEDEC registration MO-153.

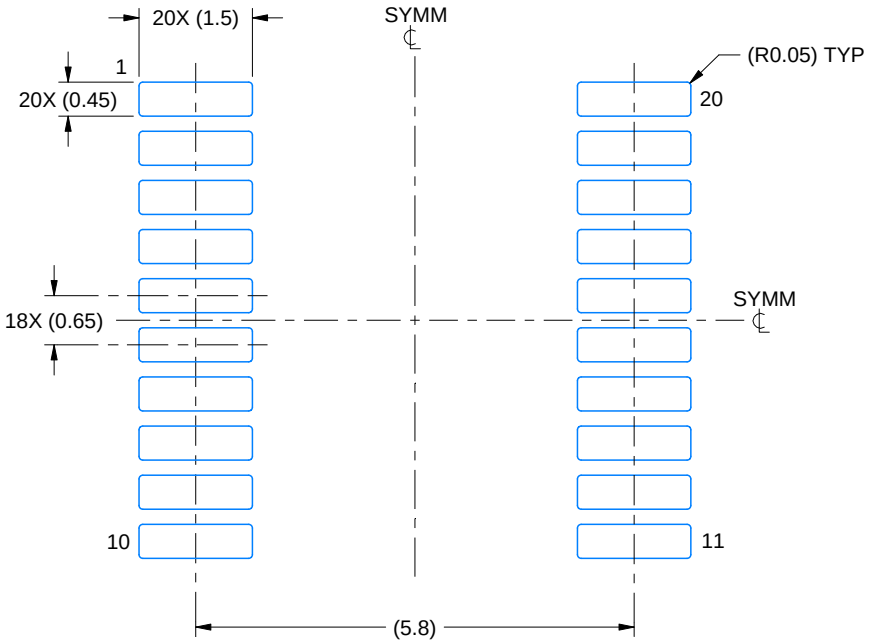

LAND PATTERN EXAMPLE
EXPOSED METAL SHOWN
SCALE: 10X



SOLDER MASK DETAILS

4220206/A 02/2017

NOTES: (continued)

6. Publication IPC-7351 may have alternate designs.
7. Solder mask tolerances between and around signal pads can vary based on board fabrication site.

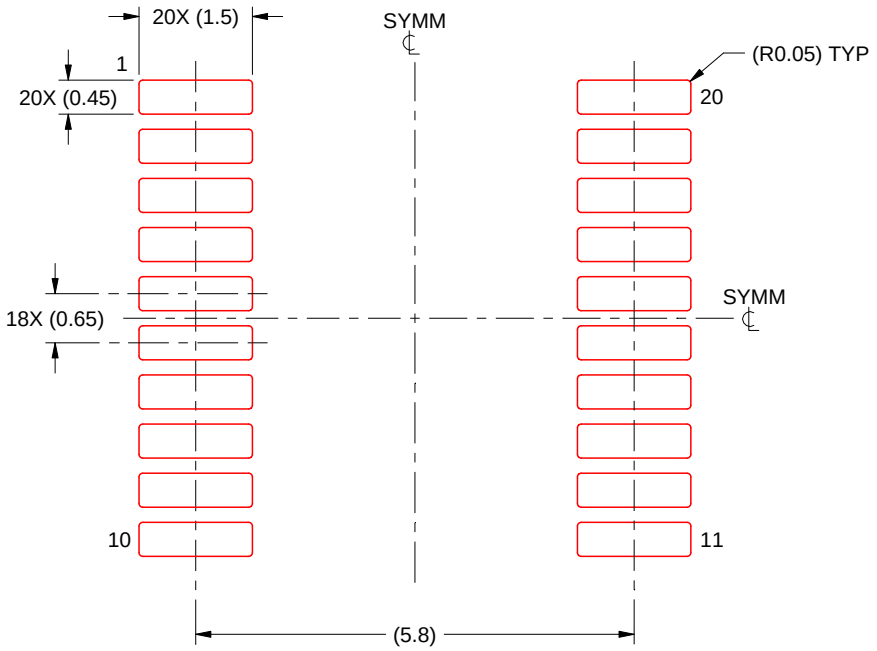

SOLDER PASTE EXAMPLE
BASED ON 0.125 mm THICK STENCIL
SCALE: 10X

4220206/A 02/2017

NOTES: (continued)

8. Laser cutting apertures with trapezoidal walls and rounded corners may offer better paste release. IPC-7525 may have alternate design recommendations.
9. Board assembly site may have different recommendations for stencil design.

重要通知和免责声明

TI“按原样”提供技术和可靠性数据（包括数据表）、设计资源（包括参考设计）、应用或其他设计建议、网络工具、安全信息和其他资源，不保证没有瑕疵且不做出任何明示或暗示的担保，包括但不限于对适销性、与某特定用途的适用性或不侵犯任何第三方知识产权的暗示担保。

这些资源可供使用 TI 产品进行设计的熟练开发人员使用。您将自行承担以下全部责任：(1) 针对您的应用选择合适的 TI 产品，(2) 设计、验证并测试您的应用，(3) 确保您的应用满足相应标准以及任何其他安全、安保法规或其他要求。

这些资源如有变更，恕不另行通知。TI 授权您仅可将这些资源用于研发本资源所述的 TI 产品的相关应用。严禁以其他方式对这些资源进行复制或展示。您无权使用任何其他 TI 知识产权或任何第三方知识产权。对于因您对这些资源的使用而对 TI 及其代表造成的任何索赔、损害、成本、损失和债务，您将全额赔偿，TI 对此概不负责。

TI 提供的产品受 TI 销售条款)、TI 通用质量指南 或 ti.com 上其他适用条款或 TI 产品随附的其他适用条款的约束。TI 提供这些资源并不会扩展或以其他方式更改 TI 针对 TI 产品发布的适用的担保或担保免责声明。 除非德州仪器 (TI) 明确将某产品指定为定制产品或客户特定产品，否则其产品均为按确定价格收入目录的标准通用器件。

TI 反对并拒绝您可能提出的任何其他或不同的条款。

版权所有 © 2026，德州仪器 (TI) 公司

最后更新日期：2025 年 10 月