OPA2333P 1.8V 微功耗零温漂运算放大器

1 特性

- 低失调电压：10µV（最大值）
- 零温漂：0.05µV/°C（最大值）
- 额定启动时间：500µs（最大值）
- 0.01Hz 至 10Hz 噪声：1.1μV_{PP}
- 静态电流：17µA
- 单电源供电
- 电源电压：1.8V 至 5.5V
- 轨到轨输入/输出
- 微型封装尺寸：2mm × 2mm WSON

2 应用

- 智能手机
- 可穿戴设备
- 健身和保健产品
- 电子称
- 医疗仪表
- 电池供电的仪器
- 手持测试设备
- 断路器

3 说明

OPA2333P 是一款 CMOS 运算放大器，其使用专有自动校准技术，可提供极低的失调电压（10µV，最大值），同时随时间推移和温度变化实现接近于零的漂移。这种高精度、低静态电流的微型放大器可提供高阻抗输入（共模范围超出电源轨电压 100mV）和轨至轨输出（摆幅在电源轨的 50mV 范围内）。此器件可以使用低至 1.8V (±0.9V) 和高达 5.5V (±2.75V) 的单电源或双电源，针对低电压、单电源运行情况进行了优化。

此外，OPA2333P 还 具有 额定最大启动时间。该额定启动时间可确保放大器供电后 500µs 时间范围内具有高精度性能，从而实现动态电源运行下的可靠耐用性。

OPA2333P 提供出色的 CMRR，而不存在与传统互补输入级关联的交叉。该设计可在驱动模数转换器 (ADC) 的过程中实现优异的性能，而不会降低微分线性。

OPA2333P 采用 2mm × 2mm 8 引脚 WSON 封装以及 额定工作温度范围是 –40°C 至 125°C。

器件信息(1)

器件型号	封装	封装尺寸（标称值）
OPA2333P	WSON (8)	2.00mm x 2.00mm

(1) 要了解所有可用封装，请参阅数据表末尾的可订购产品附录。

双向低侧电流分流放大器

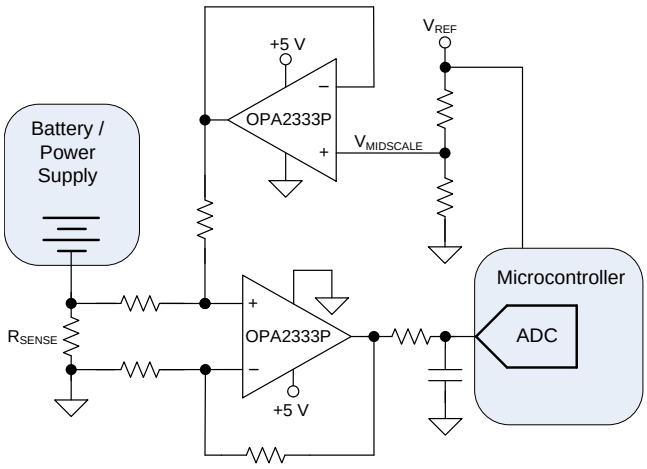

Copyright © 2017, Texas Instruments Incorporated

失调电压与温度间的关系

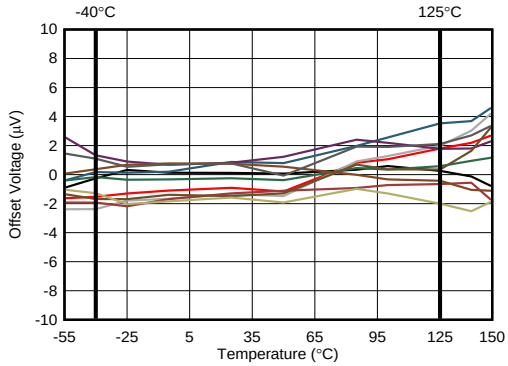

An IMPORTANT NOTICE at the end of this data sheet addresses availability, warranty, changes, use in safety-critical applications, intellectual property matters and other important disclaimers. PRODUCTION DATA.

目录

1 特性 ... 1
2 应用 ... 1
3 说明 ... 1
4 修订历史记录 ... 2
5 **Pin Configuration and Functions** ... 3
6 **Specifications** ... 4
6.1 Absolute Maximum Ratings ... 4
6.2 ESD Ratings ... 4
6.3 Recommended Operating Conditions ... 4
6.4 Thermal Information: OPA2333P ... 4
6.5 Electrical Characteristics ... 5
6.6 Typical Characteristics ... 6
7 **Detailed Description** ... 10
7.1 Overview ... 10
7.2 Functional Block Diagram ... 10
7.3 Feature Description ... 10
7.4 Device Functional Modes ... 13
8 **Application and Implementation** ... 14
8.1 Application Information ... 14
8.2 Typical Application ... 14
9 **Power Supply Recommendations** ... 18
10 **Layout** ... 20
10.1 Layout Guidelines ... 20
10.2 Layout Example ... 20
11 器件和文档支持 ... 21
11.1 器件支持 ... 21
11.2 文档支持 ... 21
11.3 接收文档更新通知 ... 21
11.4 社区资源 ... 21
11.5 商标 ... 21
11.6 静电放电警告 ... 21
11.7 Glossary ... 21
12 机械、封装和可订购信息 ... 21

4 修订历史记录

注：之前版本的页码可能与当前版本有所不同。

Changes from Original (November 2017) to Revision A — **Page**

- 已删除 从标题中删除了“CMOS”并更改了措辞 ... 1
- 已添加 向“说明”中添加了新段落 2 ... 1
- 已更改 更改了第 1 页的图形 ... 1
- Changed "DFN" to "DSG" Package ... 3
- Changed footnote reference for Common-mode and "0.5" V to "0.3" V in footnote 2 ... 4
- Changed "10 mA" to "1 mA" in Abs Max footnotes 2 and 3 ... 4
- Changed "-40" to "-55" in *Abs Max* MIN for T_A ... 4
- Changed "5" to "±5" in PSRR row of *Electrical Characteristics* ... 5
- Deleted "±400" from second row of I_B in *Electrical Characteristics* ... 5
- Changed "100" Hz to "10" Hz in i_N row of *Electrical Characteristics* ... 5
- Deleted second row for AOL in *Electrical Characteristics* ... 5
- Deleted "C_L = 100 pF" from Phase margin and Gain-bandwidth product rows of *Electrical Characteristics* ... 5
- Deleted "RL = 2 kohm" rows ... 5
- Deleted from OUTPUT subsection of *Electrical Characteristics* ... 5
- Deleted "±" from "5" in TYP column of ISC row in *Electrical Characteristics* ... 5
- Changed "Turnon" to "Start-up" in OUTPUT subsection of *Electrical Characteristics* ... 5
- 已添加 "Quiescent Current Production Distribution" graph ... 6
- 已更改 "DFN" to "WSON"; "SON" to "DFN" in *WSON Package* ... 13
- 已删除 "Single-Supply, Very Low Power, ECG Circuit" graphic ... 18
- 已删除 删除了*开发支持* 中的“THS4281 极低功耗、高速、轨至轨输入和输出电压反馈运算放大器” ... 21

Copyright © 2017, Texas Instruments Incorporated

5 Pin Configuration and Functions

DSG Package
8-Pin WSON With Exposed Thermal Pad
Top View

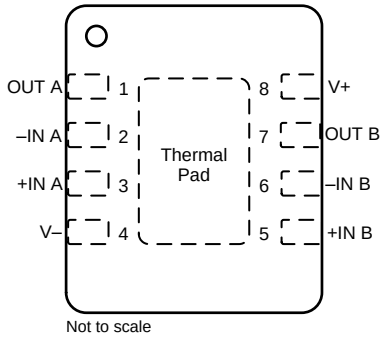

Pin Functions

PIN		I/O	DESCRIPTION
NAME	NO.		
+IN A	3	I	Noninverting input, channel A
+IN B	5	I	Noninverting input, channel B
–IN A	2	I	Inverting input, channel A
–IN B	6	I	Inverting input, channel B
OUT A	1	O	Output, channel A
OUT B	7	O	Output, channel B
V+	8	—	Positive (highest) power supply
V–	4	—	Negative (lowest) power supply
Thermal Pad	—	—	Thermal Pad, Connect to V–

Copyright © 2017, Texas Instruments Incorporated

6 Specifications

6.1 Absolute Maximum Ratings

over operating free-air temperature range (unless otherwise noted)[1]

			MIN	MAX	UNIT
Supply voltage, V_S = (V+) - (V-)	Single-supply			7	V
	Dual-supply			±3.5	
Signal input pins	Voltage	Common-mode[2]	(V–) – 0.3	(V+) + 0.3	
		Differential[3]		±0.5	
	Current			±10	mA
Output short current[4]			Continuous		
Temperature	Operating, T_A		–55	150	°C
	Junction, T_J			150	
	Storage, T_{stg}		–65	150	

(1) Stresses beyond those listed under *Absolute Maximum Rating* may cause permanent damage to the device. These are stress ratings only, which do not imply functional operation of the device at these or any other conditions beyond those indicated under *Recommended Operating Conditions.* Exposure to absolute-maximum-rated conditions for extended periods may affect device reliability.
(2) Input terminals are diode-clamped to the power-supply rails. Input signals that can swing more than 0.3 V beyond the supply rails must be current-limited to 1 mA or less.
(3) Input terminals are anti-parallel diode-clamped to each other. Input signals that can cause differential voltages of swing more than ±0.5 V must be current-limited to 1 mA or less.
(4) Short-circuit to ground, one amplifier per package.

6.2 ESD Ratings

		VALUE	UNIT
$V_{(ESD)}$ Electrostatic discharge	Human body model (HBM), per ANSI/ESDA/JEDEC JS-001, all pins[1]	±4000	V
	Charged device model (CDM), per JEDEC specification JESD22-C101, all pins[2]	±1000	

(1) JEDEC document JEP155 states that 500-V HBM allows safe manufacturing with a standard ESD control process.
(2) JEDEC document JEP157 states that 250-V CDM allows safe manufacturing with a standard ESD control process.

6.3 Recommended Operating Conditions

over operating free-air temperature range (unless otherwise noted)

			MIN	NOM	MAX	UNIT
V_S	Supply voltage, [(V+) – (V–)]	Single supply	1.8		5.5	V
		Dual supply	±0.9		±2.75	
	Specified temperature		–40		125	°C

6.4 Thermal Information: OPA2333P

THERMAL METRIC[1]		OPA2333P DSG (WSON) 8 PINS	UNIT
$R_{\theta JA}$	Junction-to-ambient thermal resistance	74.5	°C/W
$R_{\theta JC(top)}$	Junction-to-case (top) thermal resistance	93.5	°C/W
$R_{\theta JB}$	Junction-to-board thermal resistance	41.1	°C/W
Ψ_{JT}	Junction-to-top characterization parameter	4.3	°C/W
Ψ_{JB}	Junction-to-board characterization parameter	41.2	°C/W
$R_{\theta JC(bot)}$	Junction-to-case (bottom) thermal resistance	15.7	°C/W

(1) For more information about traditional and new thermal metrics, see the *Semiconductor and IC Package Thermal Metrics* application report.

Copyright © 2017, Texas Instruments Incorporated

6.5 Electrical Characteristics

At T_A = 25°C, R_L= 10 kΩ connected to V_S / 2, V_{CM} = V_S / 2, and V_{OUT} = V_S / 2 (unless otherwise noted)

PARAMETER		TEST CONDITIONS		MIN	TYP	MAX	UNIT
OFFSET VOLTAGE							
V_{OS}	Input offset voltage	V_S = 5 V			±2	±10	µV
dV_{OS}/dT	Input offset voltage drift	V_S = 5 V	T_A = –40°C to +125°C		0.02	±0.05	µV/°C
PSRR	Power-supply rejection ratio	1.8 V ≤ V_S ≤ 5.5 V	T_A = –40°C to +125°C		1	±5	µV/V
	Channel separation, dc				0.1		µV/V
INPUT BIAS CURRENT							
I_B	Input bias current				±70	±200	pA
		T_A = –40°C to +125°C			±150		pA
I_{OS}	Input offset current				±140	±400	pA
NOISE							
E_N	Input voltage noise	f = 0.1 Hz to 10 Hz, peak-to-peak			1.1		$µV_{PP}$
		f = 0.1 Hz to 10 Hz, RMS			0.2		$µV_{RMS}$
e_N	Input voltage noise density	f = 10 Hz			55		nV/√Hz
		f = 1 kHz			55		nV/√Hz
i_N	Input current noise density	f = 10 Hz			100		fA/√Hz
INPUT VOLTAGE							
V_{CM}	Common-mode voltage range			(V–) – 0.1		(V+) + 0.1	V
CMRR	Common-mode rejection ratio	(V–) – 0.1 V ≤ V_{CM} ≤ (V+) + 0.1 V, V_S = 5.5 V		106	130		dB
INPUT IMPEDANCE							
Z_{ID}	Differential				10^{13} || 2		Ω || pF
Z_{ICM}	Common-mode				10^{13} || 4		Ω || pF
OPEN-LOOP GAIN							
A_{OL}	Open-loop voltage gain	T_A = –40°C to +125°C	(V–) + 100 mV ≤ V_O ≤ (V+) – 100 mV, R_L = 10 kΩ	106	130		dB
FREQUENCY RESPONSE							
φ_m	Phase margin	V_O = 10 mV_{PP}			65		Degrees
GBW	Gain-bandwidth product	V_O = 10 mV_{PP}			350		kHz
SR	Slew rate	V_O = 4-V step	G = 1		0.16		V/µs
OUTPUT							
	Output voltage swing				30	50	mV
		T_A = –40°C to +125°C				70	mV
I_{SC}	Short-circuit current				±5		mA
C_L	Capactive load drive			See *Typical Characteristics*			
Z_O	Open-loop output impedance	f = 350 kHz, I_O = 0 mA			2		kΩ
	Start-up time	V_S = 5 V			100	500	µs
POWER SUPPLY							
V_S	Specified voltage			1.8		5.5	V
I_Q	Quiescent current (per amplifier)	I_O = 0 A			17	25	µA
			T_A = –40°C to +125°C			28	
TEMPERATURE RANGE							
T_A	Specified range			–40		125	°C
T_A	Operating range			–55		150	°C

Copyright © 2017, Texas Instruments Incorporated

6.6 Typical Characteristics

表 1. List of Typical Characteristics

TITLE	FIGURE
Offset Voltage Production Distribution	图 1
Offset Voltage Drift Production Distribution	图 2
Quiescent Current Production Distribution	图 3
Open-Loop Gain vs Frequency	图 4
Common-Mode Rejection Ratio vs Frequency	图 5
Power-Supply Rejection Ratio vs Frequency	图 6
Output Voltage Swing vs Output Current	图 7
Input Bias Current vs Common-Mode Voltage	图 8
Input Bias Current vs Temperature	图 9
Quiescent Current vs Temperature	图 10
Large-Signal Step Response	图 11
Small-Signal Step Response	图 12
Positive Overvoltage Recovery	图 13
Negative Overvoltage Recovery	图 14
Settling Time vs Closed-Loop Gain	图 15
Small-Signal Overshoot vs Load Capacitance	图 16
0.1-Hz to 10-Hz Noise	图 17
Current and Voltage Noise Spectral Density vs Frequency	图 18

At T_A = 25°C, V_S = 5 V, and C_L = 0 pF, unless otherwise noted.

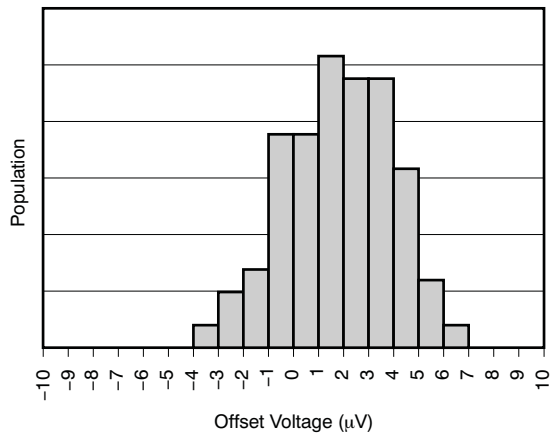

图 1. Offset Voltage Production Distribution

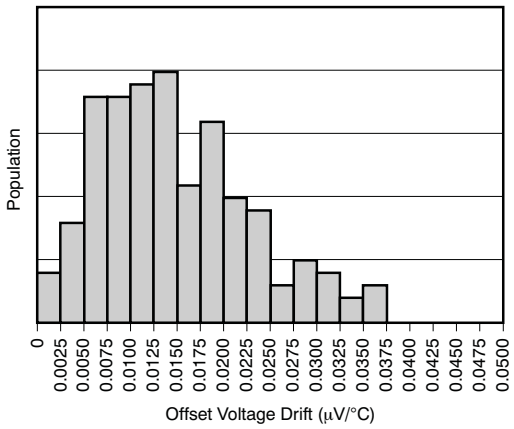

图 2. Offset Voltage Drift Production Distribution

版权 © 2017, Texas Instruments Incorporated

At T_A = 25°C, V_S = 5 V, and C_L = 0 pF, unless otherwise noted.

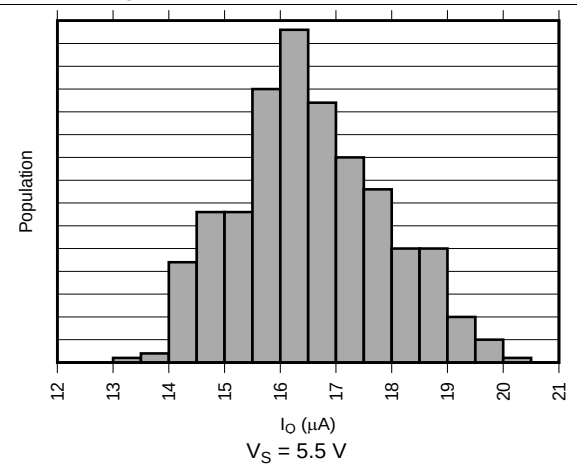

图 3. Quiescent Current Production Distribution

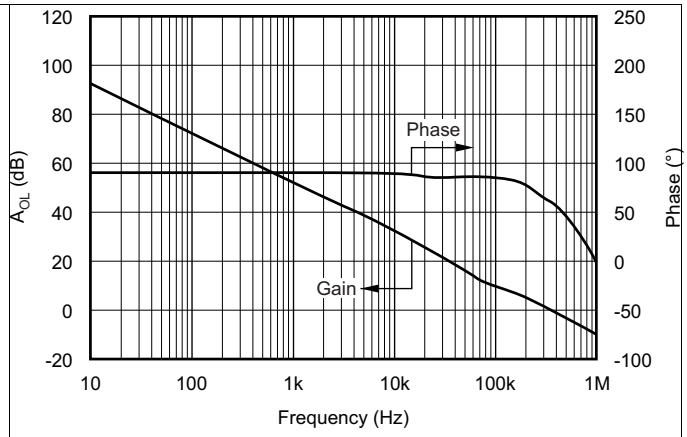

图 4. Open-Loop Gain and Phase vs Frequency

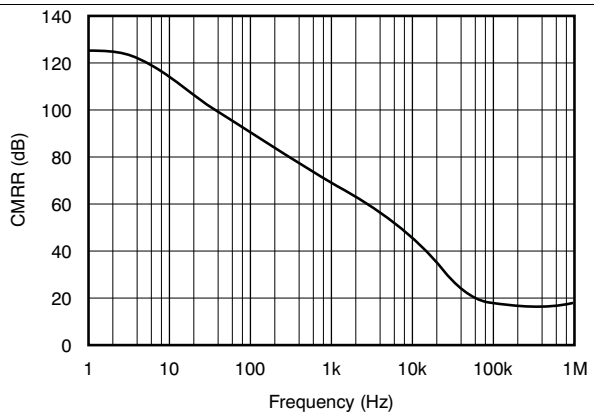

图 5. Common-Mode Rejection Ratio vs Frequency

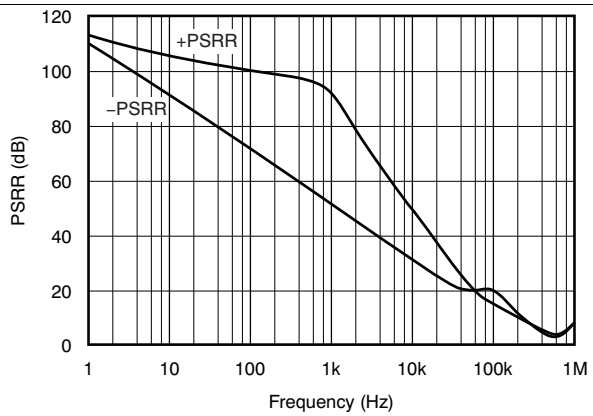

图 6. Power-Supply Rejection Ratio vs Frequency

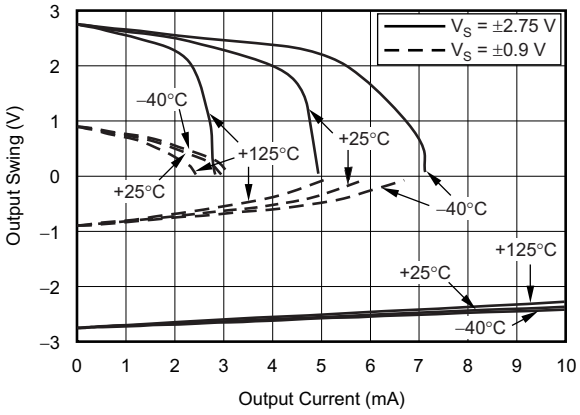

图 7. Output Voltage Swing vs Output Current

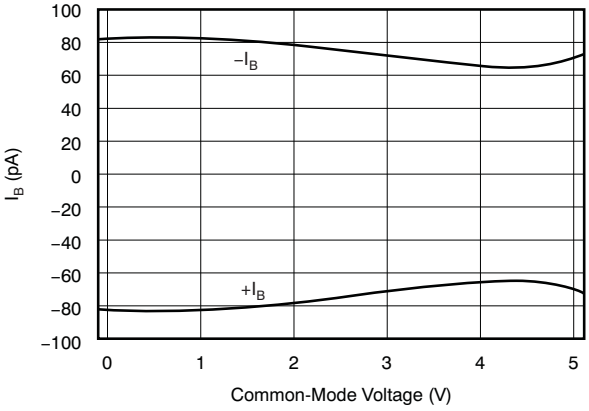

图 8. Input Bias Current vs Common-Mode Voltage

At T_A = 25°C, V_S = 5 V, and C_L = 0 pF, unless otherwise noted.

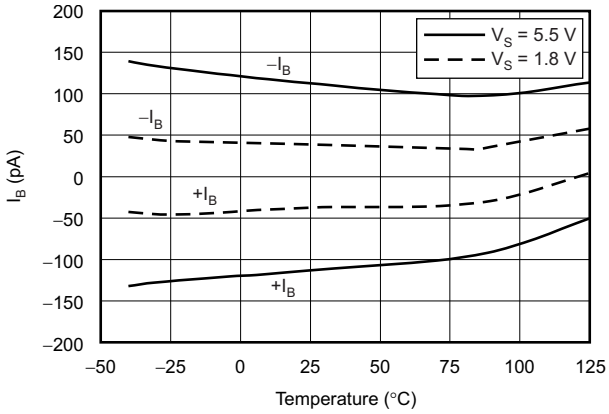

图 9. Input Bias Current vs Temperature

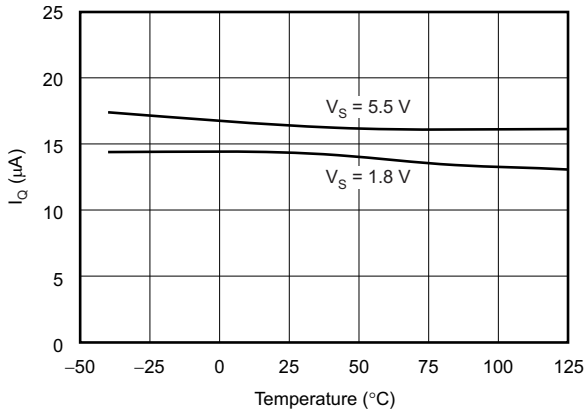

图 10. Quiescent Current vs Temperature

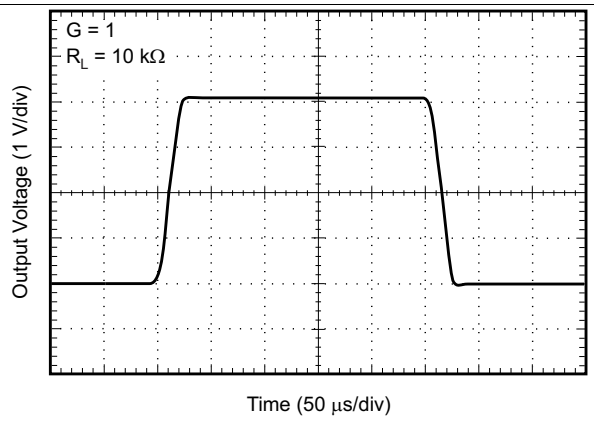

图 11. Large-Signal Step Response

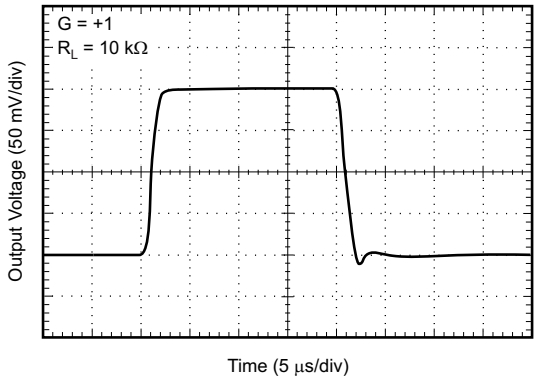

图 12. Small-Signal Step Response

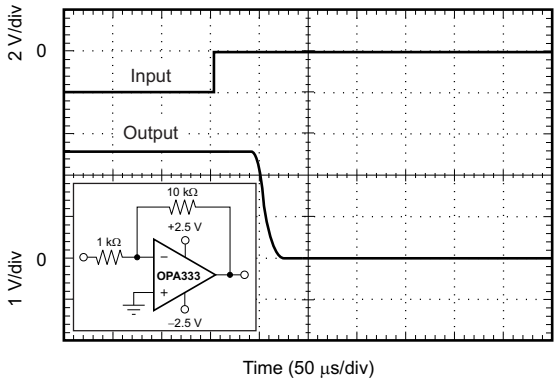

图 13. Positive Overvoltage Recovery

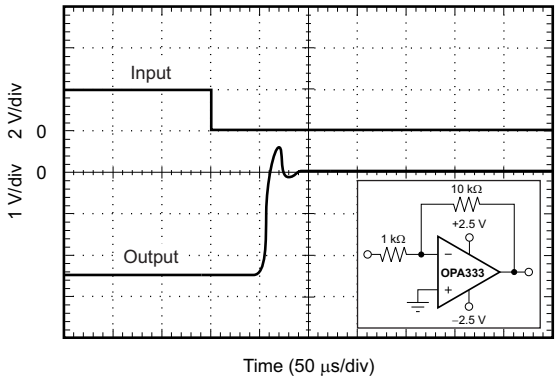

图 14. Negative Overvoltage Recovery

版权 © 2017, Texas Instruments Incorporated

At T_A = 25°C, V_S = 5 V, and C_L = 0 pF, unless otherwise noted.

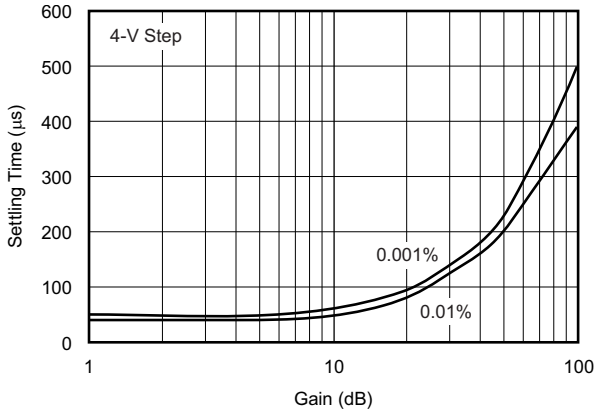

图 15. Settling Time vs Closed-Loop Gain

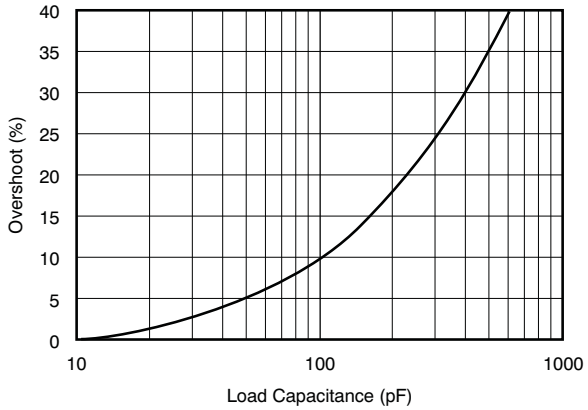

图 16. Small-Signal Overshoot vs Load Capacitance

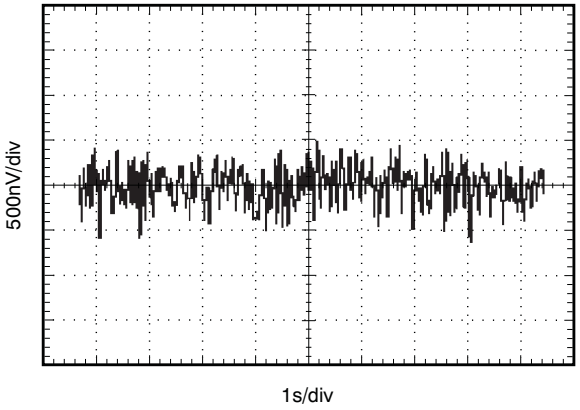

图 17. 0.1-Hz to 10-Hz Noise

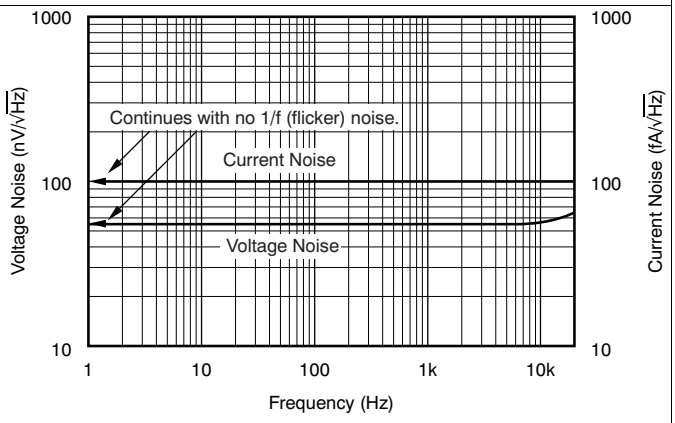

图 18. Current and Voltage Noise Spectral Density vs Frequency

7 Detailed Description

7.1 Overview

The OPA2333P is a Zero-Drift, low-power, rail-to-rail input and output operational amplifier. The device operates from 1.8 V to 5.5 V, is unity-gain stable, and is suitable for a wide range of general-purpose applications. The Zero-Drift architecture provides ultra-low offset voltage and near-zero offset voltage drift.

7.2 Functional Block Diagram

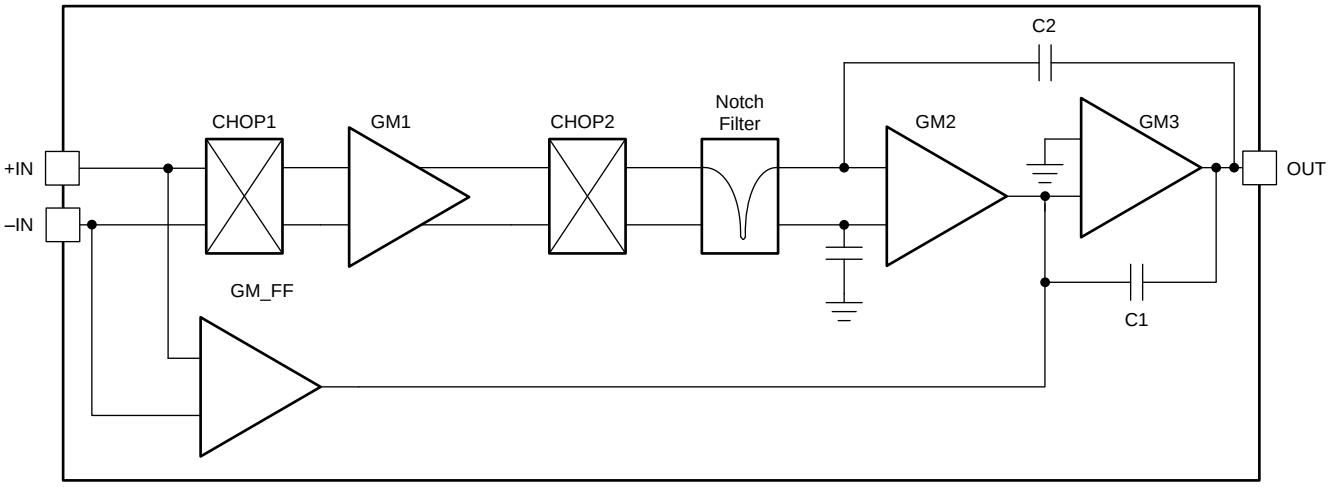

Copyright © 2017, Texas Instruments Incorporated

7.3 Feature Description

The OPA2333P is unity-gain stable and free from unexpected output phase reversal. This device uses a proprietary auto-calibration technique to provide low offset voltage and very low drift over time and temperature. For lowest offset voltage and precision performance, optimize circuit layout and mechanical conditions. Avoid temperature gradients that create thermoelectric (Seebeck) effects in the thermocouple junctions formed from connecting dissimilar conductors. Cancel these thermally-generated potentials by assuring they are equal on both input terminals. Other layout and design considerations include:

- Use low thermoelectric-coefficient conditions (avoid dissimilar metals).
- Thermally isolate components from power supplies or other heat sources.
- Shield operational amplifier and input circuitry from air currents, such as cooling fans.

Following these guidelines reduces the likelihood of junctions being at different temperatures, which can cause thermoelectric voltages of 0.1 μV/°C or higher, depending on materials used.

7.3.1 Operating Voltage

The OPA2333P operational amplifier operates over a power-supply range of 1.8 V to 5.5 V (±0.9 V to ±2.75 V). Parameters that vary over supply voltage or temperature are shown in the *Typical Characteristics* section.

CAUTION

Supply voltages higher than +7 V (absolute maximum) can permanently damage the device.

版权 © 2017, Texas Instruments Incorporated

Feature Description (接下页)

7.3.2 Input Voltage

The OPA2333P input common-mode voltage range extends 0.1 V beyond the supply rails. The OPA2333P is designed to cover the full range without the troublesome transition region found in some other rail-to-rail amplifiers.

Typically, input bias current is approximately 70 pA; however, input voltages that exceed the power supplies can cause excessive current to flow into or out of the input pins. Momentary voltages greater than the power supply can be tolerated if the input current is limited to 10 mA. This limitation is easily accomplished with an input resistor, as shown in 图 19.

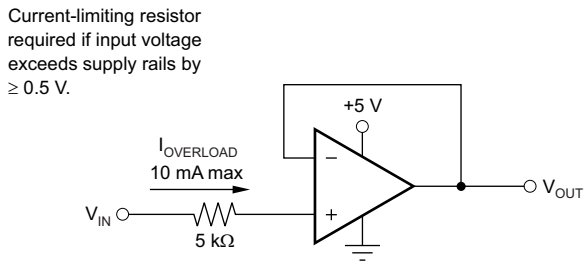

图 19. Input Current Protection

7.3.3 Internal Offset Correction

The OPA2333P operational amplifier uses an auto-calibration technique with a time-continuous 350-kHz operational amplifier in the signal path. This amplifier is zero-corrected every 8 µs using a proprietary technique. Upon power up, the amplifier requires approximately 100 µs to achieve specified V_{OS} accuracy. This design has no aliasing or flicker noise.

7.3.4 Achieving Output Swing to the Op Amp Negative Rail

Some applications require output voltage swings from 0 V to a positive full-scale voltage (such as 2.5 V) with excellent accuracy. With most single-supply operational amplifiers, problems arise when the output signal approaches 0 V, near the lower output swing limit of a single-supply operational amplifier. A good, single-supply operational amplifier may swing close to single-supply ground, but does not reach ground. The output of the OPA2333P can be made to swing to, or slightly below, ground on a single-supply power source. This swing is achieved with the use of the use of another resistor and an additional, more negative power supply than the operational amplifier negative supply. A pulldown resistor can be connected between the output and the additional negative supply to pull the output down below the value that the output would otherwise achieve, as shown in 图 20.

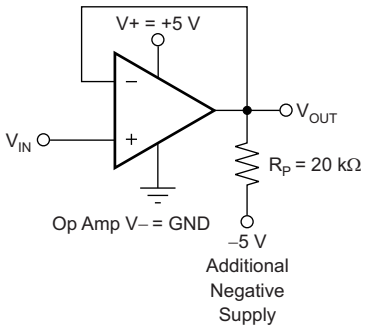

图 20. V_{OUT} Range to Ground

Feature Description (接下页)

The OPA2333P has an output stage that allows the output voltage to be pulled to the negative supply rail, or slightly below, using the technique previously described. This technique only works with some types of output stages. The OPA2333P is characterized to perform with this technique; the recommended resistor value is approximately 20 kΩ.

注

This configuration increases the current consumption by several hundreds of microamps.

Accuracy is excellent down to 0 V and as low as –2 mV. Limiting and nonlinearity occur below –2 mV, but excellent accuracy returns after the output is again driven above –2 mV. Lowering the resistance of the pulldown resistor allows the operational amplifier to swing even further below the negative rail. Resistances as low as 10 kΩ can be used to achieve excellent accuracy down to –10 mV.

7.3.5 Specified Start-Up Performance

The OPA2333P has a dedicated start-up circuit that ensures a fast, repeatable startup for all supply conditions. The OPA2333P is specified to have a maximum start-up time that is production-tested as illustrated in the configuration shown in 图 21. Start-up time is defined as the time from when the power supply reaches the minimum specified voltage to the time the output has settled to within 20 mV of the nominal value. See 图 22.

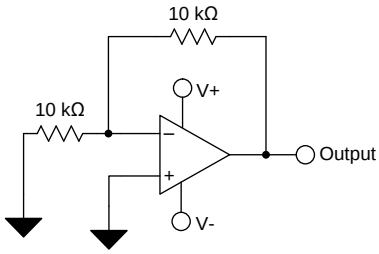

图 21. OPA2333P Equivalent Start-Up Test Configuration

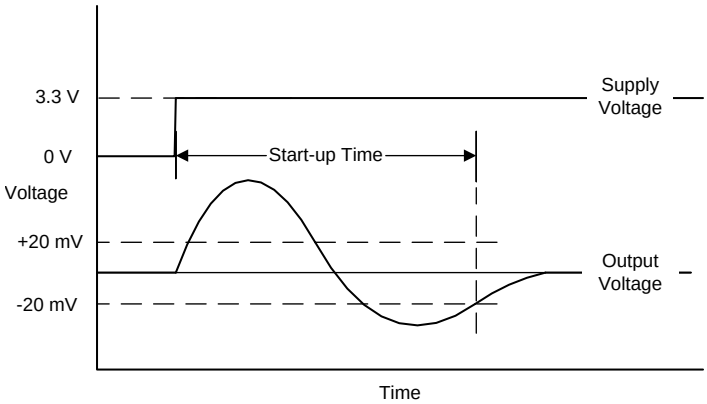

图 22. OPA2333P Start-Up Timing

版权 © 2017, Texas Instruments Incorporated

Feature Description (接下页)

7.3.6 WSON Package

The OPA2333P is offered in an WSON-8 package (also known as *DFN*). The WSON is a QFN package with lead contacts on only two sides of the bottom of the package. This leadless package maximizes board space and enhances thermal and electrical characteristics through an exposed pad.

WSON packages are physically small, have a smaller routing area, improved thermal performance, and improved electrical parasitics. Additionally, the absence of external leads eliminates bent-lead issues.

The WSON package can be easily mounted using standard PCB assembly techniques. See application reports *QFN/SON PCB Attachment* and *Quad Flatpack No-Lead Logic Packages*, both available for download at www.ti.com.

注

The exposed leadframe die pad on the bottom of the package should be connected to V– or left unconnected.

7.4 Device Functional Modes

The OPA2333P device has a single functional mode. The device is powered on as long as the power supply voltage is between 1.8 V (±0.9 V) and 5.5 V (±2.75 V).

8 Application and Implementation

注

Information in the following applications sections is not part of the TI component specification, and TI does not warrant its accuracy or completeness. TI's customers are responsible for determining suitability of components for their purposes. Customers should validate and test their design implementation to confirm system functionality.

8.1 Application Information

The OPA2333P is a unity-gain stable, precision operational amplifier with very low offset voltage drift; these devices are also free from output phase reversal. Applications with noisy or high-impedance power supplies require decoupling capacitors close to the device power-supply pins. In most cases, 0.1-µF capacitors are adequate.

8.2 Typical Application

8.2.1 Bidirectional Current-Sensing

This single-supply, low-side, bidirectional current-sensing solution detects load currents from –1 A to 1 A. The single-ended output spans from 110 mV to 3.19 V. This design uses the OPA2333P because of its low offset voltage and rail-to-rail input and output. One of the amplifiers is configured as a difference amplifier and the other provides the reference voltage.

图 23 shows the solution.

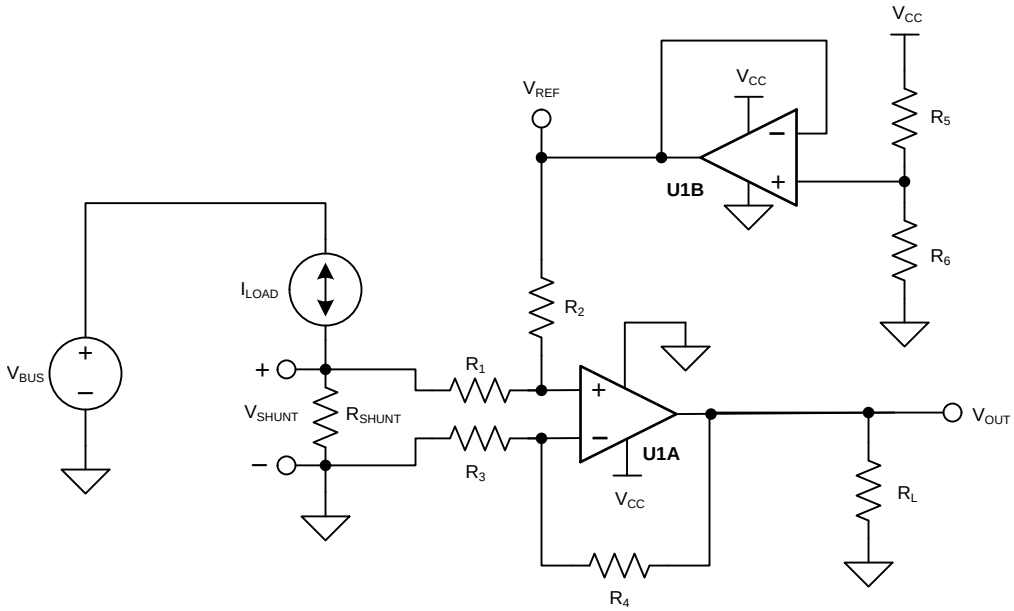

Copyright © 2016, Texas Instruments Incorporated

图 23. Bidirectional Current-Sensing Schematic

版权 © 2017, Texas Instruments Incorporated

Typical Application (接下页)

8.2.1.1 Design Requirements

This solution has the following requirements:

- Supply voltage: 3.3 V
- Input: –1 A to 1 A
- Output: 1.65 V ±1.54 V (110 mV to 3.19 V)

8.2.1.2 Detailed Design Procedure

The load current, I_{LOAD}, flows through the shunt resistor (R_{SHUNT}) to develop the shunt voltage, V_{SHUNT}. The shunt voltage is then amplified by the difference amplifier, which consists of U1A and R_1 through R_4. The gain of the difference amplifier is set by the ratio of R_4 to R_3. To minimize errors, set $R_2 = R_4$ and $R_1 = R_3$. The reference voltage, V_{REF}, is supplied by buffering a resistor divider using U1B. The transfer function is given by 公式 1.

$$V_{OUT} = V_{SHUNT} \times Gain_{Diff_Amp} + V_{REF}$$

where

- $V_{SHUNT} = I_{LOAD} \times R_{SHUNT}$
- $Gain_{Diff_Amp} = \frac{R_4}{R_3}$
- $V_{REF} = V_{CC} \times \left(\frac{R_6}{R_5 + R_6}\right)$ (1)

There are two types of errors in this design: offset and gain. Gain errors are introduced by the tolerance of the shunt resistor and the ratios of R_4 to R_3 and, similarly, R_2 to R_1. Offset errors are introduced by the voltage divider (R_5 and R_6) and how closely the ratio of R_4/R_3 matches R_2/R_1. The latter value impacts the CMRR of the difference amplifier, which ultimately translates to an offset error.

Because this is a low-side measurement, the value of V_{SHUNT} is the ground potential for the system load. Therefore, it is important to place a maximum value on V_{SHUNT}. In this design, the maximum value for V_{SHUNT} is set to 100 mV. 公式 2 calculates the maximum value of the shunt resistor given a maximum shunt voltage of 100 mV and maximum load current of 1 A.

$$R_{SHUNT(Max)} = \frac{V_{SHUNT(Max)}}{I_{LOAD(Max)}} = \frac{100\ mV}{1\ A} = 100\ m\Omega \quad (2)$$

The tolerance of R_{SHUNT} is directly proportional to cost. For this design, a shunt resistor with a tolerance of 0.5% was selected. If greater accuracy is required, select a 0.1% resistor or better.

The load current is bidirectional; therefore, the shunt voltage range is –100 mV to 100 mV. This voltage is divided down by R_1 and R_2 before reaching the operational amplifier, U1A. Take care to ensure that the voltage present at the noninverting node of U1A is within the common-mode range of the device. Therefore, it is important to use an operational amplifier, such as the OPA2333P, that has a common-mode range that extends below the negative supply voltage. Finally, to minimize offset error, note that the OPA2333P has a typical offset voltage of ±2 µV (±10 µV maximum).

Given a symmetric load current of –1 A to 1 A, the voltage divider resistors (R_5 and R_6) must be equal. To be consistent with the shunt resistor, a tolerance of 0.5% was selected. To minimize power consumption, 10-kΩ resistors were used.

To set the gain of the difference amplifier, the common-mode range and output swing of the OPA2333P must be considered. 公式 3 and 公式 4 depict the typical common-mode range and maximum output swing, respectively, of the OPA2333P given a 3.3-V supply.

$$-100\ mV < V_{CM} < 3.4\ V \quad (3)$$

$$100\ mV < V_{OUT} < 3.2\ V \quad (4)$$

The gain of the difference amplifier can now be calculated as shown in 公式 5.

$$Gain_{Diff_Amp} = \frac{V_{OUT_Max} - V_{OUT_Min}}{R_{SHUNT} \times (I_{MAX} - I_{MIN})} = \frac{3.2\ V - 100\ mV}{100\ m\Omega \times [1\ A - (-1A)]} = 15.5\ \frac{V}{V} \quad (5)$$

Typical Application (接下页)

The resistor value selected for R_1 and R_3 was 1 kΩ. 15.4 kΩ was selected for R_2 and R_4 because it is the nearest standard value. Therefore, the ideal gain of the difference amplifier is 15.4 V/V.

The gain error of the circuit primarily depends on R_1 through R_4. As a result of this dependence, 0.1% resistors were selected. This configuration reduces the likelihood that the design requires a two-point calibration. A simple one-point calibration, if desired, removes the offset errors introduced by the 0.5% resistors.

8.2.1.3 Application Curve

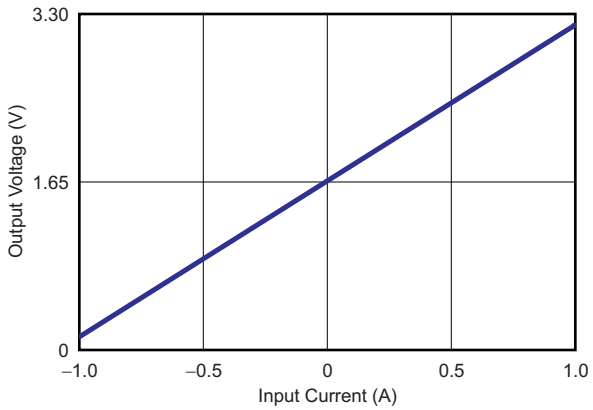

图 24. Bidirectional Current-Sensing Circuit Performance: Output Voltage vs Input Current

8.2.2 High-Side Voltage-to-Current (V-I) Converter

The circuit shown in 图 25 is a high-side voltage-to-current (V-I) converter. It translates to an input voltage of 0 V to 2 V and output current of 0 mA to 100 mA. 图 26 shows the measured transfer function for this circuit. The low offset voltage and offset drift of the OPA2333P facilitate excellent dc accuracy for the circuit.

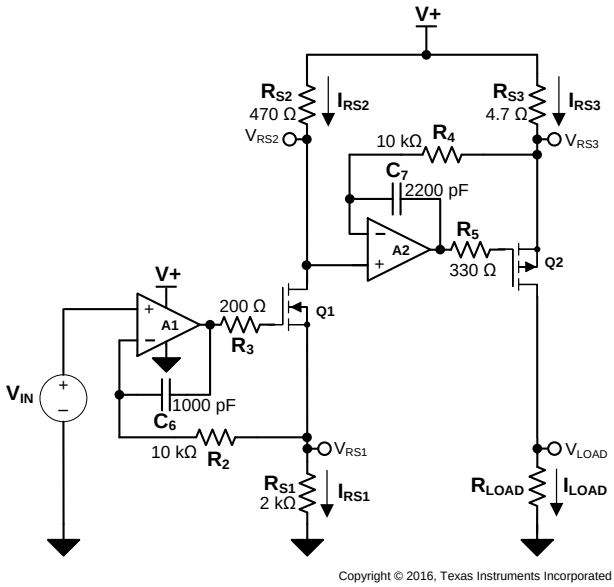

图 25. High-Side Voltage-to-Current (V-I) Converter

版权 © 2017, Texas Instruments Incorporated

Typical Application (接下页)

8.2.2.1 Design Requirements

The design requirements are as follows:

- Supply Voltage: 5 V DC
- Input: 0 V to 2 V DC
- Output: 0 mA to 100 mA DC

8.2.2.2 Detailed Design Procedure

The V-I transfer function of the circuit is based on the relationship between the input voltage, V_{IN}, and the three current sensing resistors, R_{S1}, R_{S2}, and R_{S3}. The relationship between V_{IN} and R_{S1} determines the current that flows through the first stage of the design. The current gain from the first stage to the second stage is based on the relationship between R_{S2} and R_{S3}.

For a successful design, pay close attention to the dc characteristics of the operational amplifier chosen for the application. To meet the performance goals, this application benefits from an operational amplifier with low offset voltage, low temperature drift, and rail-to-rail output. The OPA2333P CMOS operational amplifier is a high-precision, 2-uV offset, 0.02-μV/°C drift amplifier optimized for low-voltage, single-supply operation with an output swing to within 50 mV of the positive rail. The OPA2333P family uses chopping techniques to provide low initial offset voltage and near-zero drift over time and temperature. Low offset voltage and low drift reduce the offset error in the system, making these devices appropriate for precise dc control. The rail-to-rail output stage of the OPA2333P ensures that the output swing of the operational amplifier is able to fully control the gate of the MOSFET devices within the supply rails.

A detailed error analysis, design procedure, and additional measured results are given in TIPD102.

8.2.2.3 Application Curve

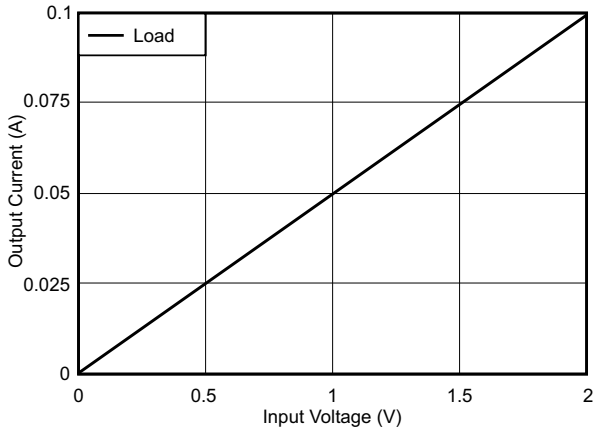

图 26. Measured Transfer Function for High-Side V-I Converter

Typical Application (接下页)

8.2.3 Other Applications

Additional application ideas are shown in 图 27 and 图 28.

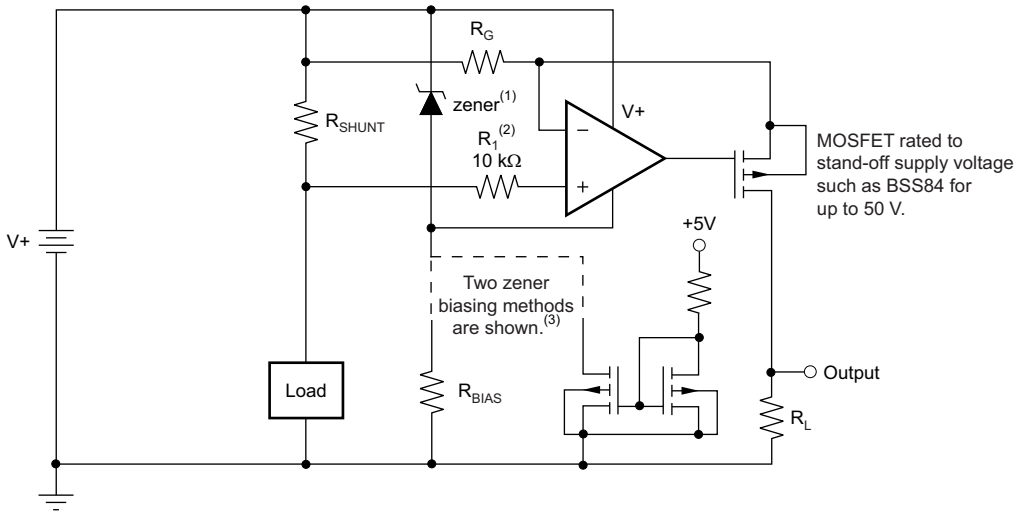

(1) Zener rated for op amp supply capability (that is, 5.1 V for OPA2333P).
(2) Current-limiting resistor.
(3) Choose zener biasing resistor or dual N-MOSFETs (FDG6301N, NTJD4001N, or Si1034).

图 27. High-Side Current Monitor

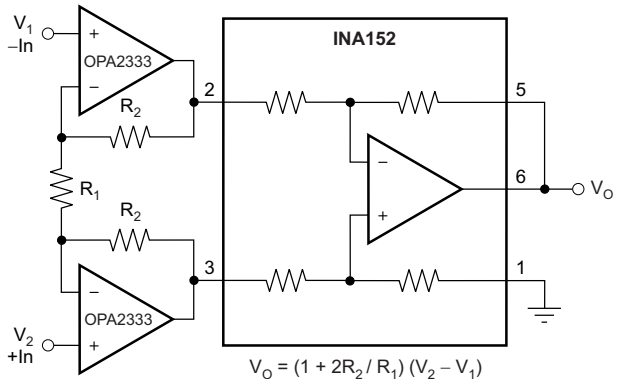

图 28. Precision Instrumentation Amplifier

9 Power Supply Recommendations

The OPA2333P is specified for operation from 1.8 V to 5.5 V (±0.9 V to ±2.75 V); many specifications apply from –40°C to 125°C. The *Typical Characteristics* presents parameters that can exhibit significant variance with regard to operating voltage or temperature.

CAUTION

Supply voltages larger than 7 V can permanently damage the device (see *Absolute Maximum Ratings*).

版权 © 2017, Texas Instruments Incorporated

TI recommends placing 0.1-μF bypass capacitors close to the power-supply pins to reduce errors coupling in from noisy or high-impedance power supplies. For more detailed information on bypass capacitor placement, refer to the *Layout* section.

10 Layout

10.1 Layout Guidelines

10.1.1 General Layout Guidelines

Pay attention to good layout practices. Keep traces short and when possible and use a printed-circuit-board (PCB) ground plane with surface-mount components placed as close to the device pins as possible. Place a 0.1-μF capacitor closely across the supply pins. Apply these guidelines throughout the analog circuit to improve performance and provide benefits, such as reducing the electromagnetic interference (EMI) susceptibility.

Operational amplifiers vary in susceptibility to radio frequency interference (RFI). RFI can generally be identified as a variation in offset voltage or DC signal levels with changes in the interfering RF signal. The OPA2333P is specifically designed to minimize susceptibility to RFI and demonstrates remarkably low sensitivity compared to previous generation devices. Strong RF fields may still cause varying offset levels.

10.1.2 WSON (DFN) Layout Guidelines

Solder the exposed leadframe die pad on the WSON package to a thermal pad on the PCB. A mechanical drawing showing an example layout is attached at the end of this data sheet. Refinements to this layout may be necessary based on assembly process requirements. Mechanical drawings located at the end of this data sheet list the physical dimensions for the package and pad. The five holes in the landing pattern are optional, and are intended for use with thermal vias that connect the leadframe die pad to the heatsink area on the PCB.

Soldering the exposed pad significantly improves board-level reliability during temperature cycling, key push, package shear, and similar board-level tests. Even with applications that have low-power dissipation, the exposed pad must be soldered to the PCB to provide structural integrity and long-term reliability.

10.2 Layout Example

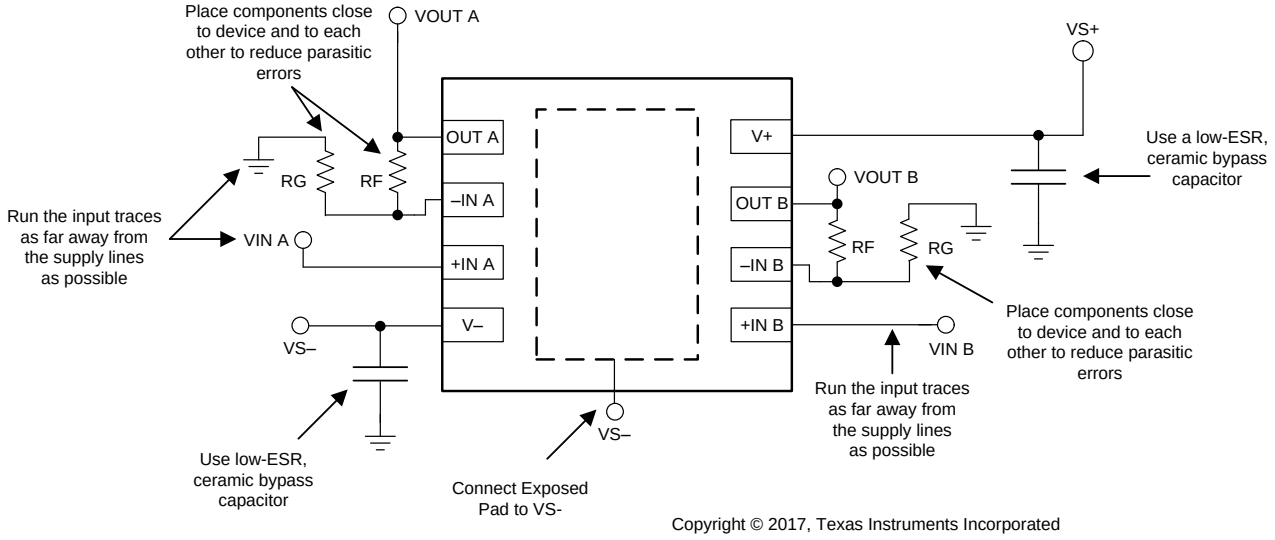

图 29. Layout Example

版权 © 2017, Texas Instruments Incorporated

11 器件和文档支持

11.1 器件支持

11.1.1 开发支持

关于此产品的开发支持，请参阅以下内容：

- *《高侧电压电流转换器，0V 至 2V，0mA 至 100mA，1% 满量程误差》*
- *《低电平电压电流转换器参考设计，0V 至 5V 输入，0μA 至 5μA 输出》*
- *《ADS8881x 18 位、1MSPS、串行接口、微功耗、微型、真差分输入、SAR 模数转换器》*
- *《针对最低失真和最低噪声进行了优化的 18 位 1MSPS 数据采集参考设计》*
- *《ADS1100 自校准 16 位模数转换器》*
- *《REF31xx 15ppm/°C 最大值、100μA、SOT-23 系列电压基准》*
- *《INA326、INA327 精密低漂移 CMOS 仪表放大器》*

11.2 文档支持

11.2.1 相关文档

请参阅如下相关文档：

- *《QFN/SON PCB 连接》*
- *零温漂放大器： 特性 和优势*

11.3 接收文档更新通知

如需接收文档更新通知，请导航至 TI.com 上的器件产品文件夹。单击右上角的*通知我* 进行注册，即可每周接收产品信息更改摘要。有关更改的详细信息，请查看任何已修订文档中包含的修订历史记录。

11.4 社区资源

下列链接提供到 TI 社区资源的连接。链接的内容由各个分销商"按照原样"提供。这些内容并不构成 TI 技术规范，并且不一定反映 TI 的观点；请参阅 TI 的 《使用条款》。

TI E2E™ 在线社区 ***TI 的工程师对工程师 (E2E) 社区。***此社区的创建目的在于促进工程师之间的协作。在 e2e.ti.com 中，您可以咨询问题、分享知识、拓展思路并与同行工程师一道帮助解决问题。

设计支持 ***TI 参考设计支持*** 可帮助您快速查找有帮助的 E2E 论坛、设计支持工具以及技术支持的联系信息。

11.5 商标

E2E is a trademark of Texas Instruments.
All other trademarks are the property of their respective owners.

11.6 静电放电警告

这些装置包含有限的内置 ESD 保护。 存储或装卸时，应将导线一起截短或将装置放置于导电泡棉中，以防止 MOS 门极遭受静电损伤。

11.7 Glossary

SLYZ022 — *TI Glossary*.

This glossary lists and explains terms, acronyms, and definitions.

12 机械、封装和可订购信息

以下页面包含机械、封装和可订购信息。这些信息是指定器件的最新可用数据。数据如有变更，恕不另行通知和修订此文档。如欲获取此数据表的浏览器版本，请参阅左侧的导航。

PACKAGING INFORMATION

Orderable part number	Status (1)	Material type (2)	Package | Pins	Package qty | Carrier	RoHS (3)	Lead finish/ Ball material (4)	MSL rating/ Peak reflow (5)	Op temp (°C)	Part marking (6)
OPA2333PIDSGR	Active	Production	WSON (DSG) | 8	3000 | LARGE T&R	Yes	SN	Level-2-260C-1 YEAR	-40 to 125	1GFY
OPA2333PIDSGR.B	Active	Production	WSON (DSG) | 8	3000 | LARGE T&R	Yes	SN	Level-2-260C-1 YEAR	-40 to 125	1GFY
OPA2333PIDSGRG4	Active	Production	WSON (DSG) | 8	3000 | LARGE T&R	Yes	NIPDAU	Level-2-260C-1 YEAR	-40 to 125	1GFY
OPA2333PIDSGRG4.B	Active	Production	WSON (DSG) | 8	3000 | LARGE T&R	Yes	NIPDAU	Level-2-260C-1 YEAR	-40 to 125	1GFY
OPA2333PIDSGT	Active	Production	WSON (DSG) | 8	250 | SMALL T&R	Yes	SN	Level-1-260C-UNLIM	-40 to 125	1GFY
OPA2333PIDSGT.B	Active	Production	WSON (DSG) | 8	250 | SMALL T&R	Yes	SN	Level-1-260C-UNLIM	-40 to 125	1GFY

(1) **Status:** For more details on status, see our product life cycle.

(2) **Material type:** When designated, preproduction parts are prototypes/experimental devices, and are not yet approved or released for full production. Testing and final process, including without limitation quality assurance, reliability performance testing, and/or process qualification, may not yet be complete, and this item is subject to further changes or possible discontinuation. If available for ordering, purchases will be subject to an additional waiver at checkout, and are intended for early internal evaluation purposes only. These items are sold without warranties of any kind.

(3) **RoHS values:** Yes, No, RoHS Exempt. See the TI RoHS Statement for additional information and value definition.

(4) **Lead finish/Ball material:** Parts may have multiple material finish options. Finish options are separated by a vertical ruled line. Lead finish/Ball material values may wrap to two lines if the finish value exceeds the maximum column width.

(5) **MSL rating/Peak reflow:** The moisture sensitivity level ratings and peak solder (reflow) temperatures. In the event that a part has multiple moisture sensitivity ratings, only the lowest level per JEDEC standards is shown. Refer to the shipping label for the actual reflow temperature that will be used to mount the part to the printed circuit board.

(6) **Part marking:** There may be an additional marking, which relates to the logo, the lot trace code information, or the environmental category of the part.

Multiple part markings will be inside parentheses. Only one part marking contained in parentheses and separated by a "~" will appear on a part. If a line is indented then it is a continuation of the previous line and the two combined represent the entire part marking for that device.

Important Information and Disclaimer: The information provided on this page represents TI's knowledge and belief as of the date that it is provided. TI bases its knowledge and belief on information provided by third parties, and makes no representation or warranty as to the accuracy of such information. Efforts are underway to better integrate information from third parties. TI has taken and continues to take reasonable steps to provide representative and accurate information but may not have conducted destructive testing or chemical analysis on incoming materials and chemicals. TI and TI suppliers consider certain information to be proprietary, and thus CAS numbers and other limited information may not be available for release.

In no event shall TI's liability arising out of such information exceed the total purchase price of the TI part(s) at issue in this document sold by TI to Customer on an annual basis.

TAPE AND REEL INFORMATION

REEL DIMENSIONS

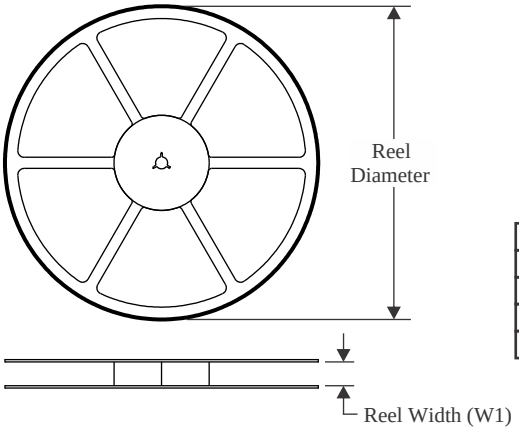

TAPE DIMENSIONS

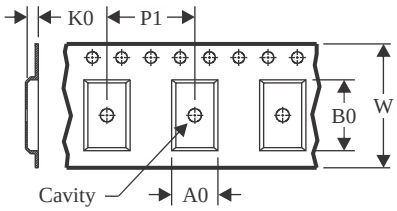

A0	Dimension designed to accommodate the component width
B0	Dimension designed to accommodate the component length
K0	Dimension designed to accommodate the component thickness
W	Overall width of the carrier tape
P1	Pitch between successive cavity centers

QUADRANT ASSIGNMENTS FOR PIN 1 ORIENTATION IN TAPE

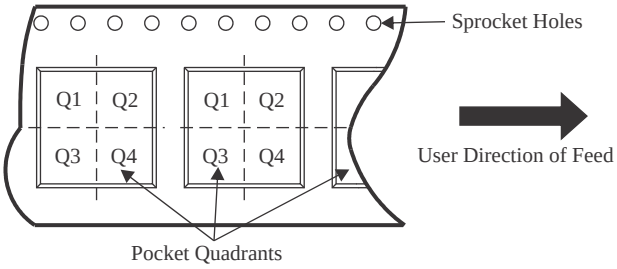

*All dimensions are nominal

Device	Package Type	Package Drawing	Pins	SPQ	Reel Diameter (mm)	Reel Width W1 (mm)	A0 (mm)	B0 (mm)	K0 (mm)	P1 (mm)	W (mm)	Pin1 Quadrant
OPA2333PIDSGR	WSON	DSG	8	3000	180.0	8.4	2.3	2.3	1.15	4.0	8.0	Q2
OPA2333PIDSGRG4	WSON	DSG	8	3000	180.0	8.4	2.3	2.3	1.15	4.0	8.0	Q2
OPA2333PIDSGT	WSON	DSG	8	250	180.0	8.4	2.3	2.3	1.15	4.0	8.0	Q2

TAPE AND REEL BOX DIMENSIONS

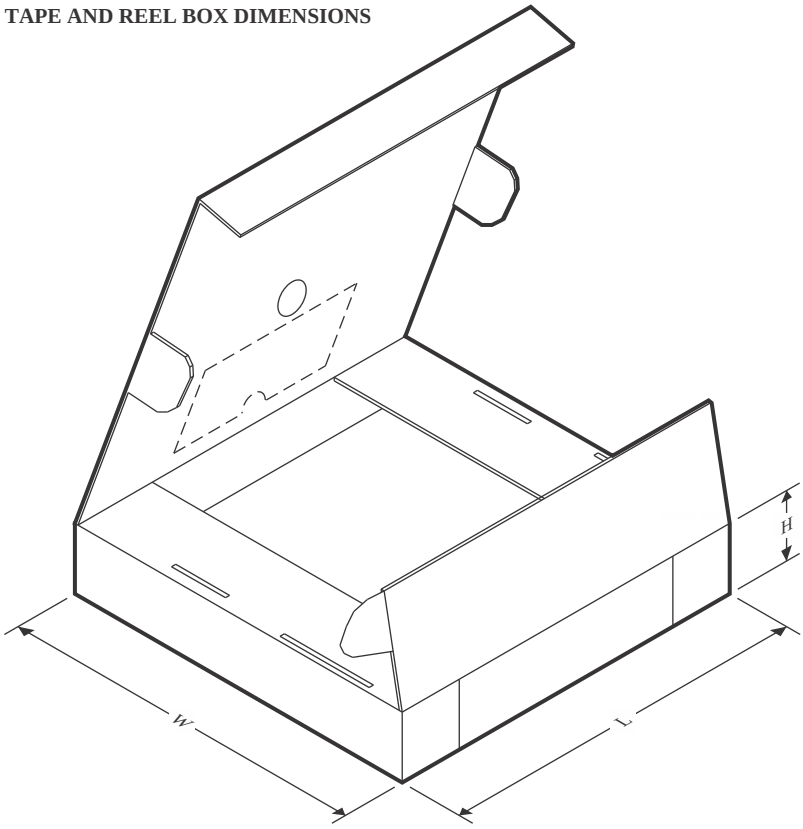

*All dimensions are nominal

Device	Package Type	Package Drawing	Pins	SPQ	Length (mm)	Width (mm)	Height (mm)
OPA2333PIDSGR	WSON	DSG	8	3000	210.0	185.0	35.0
OPA2333PIDSGRG4	WSON	DSG	8	3000	210.0	185.0	35.0
OPA2333PIDSGT	WSON	DSG	8	250	210.0	185.0	35.0

GENERIC PACKAGE VIEW

DSG 8

WSON - 0.8 mm max height

2 x 2, 0.5 mm pitch

PLASTIC SMALL OUTLINE - NO LEAD

This image is a representation of the package family, actual package may vary.
Refer to the product data sheet for package details.

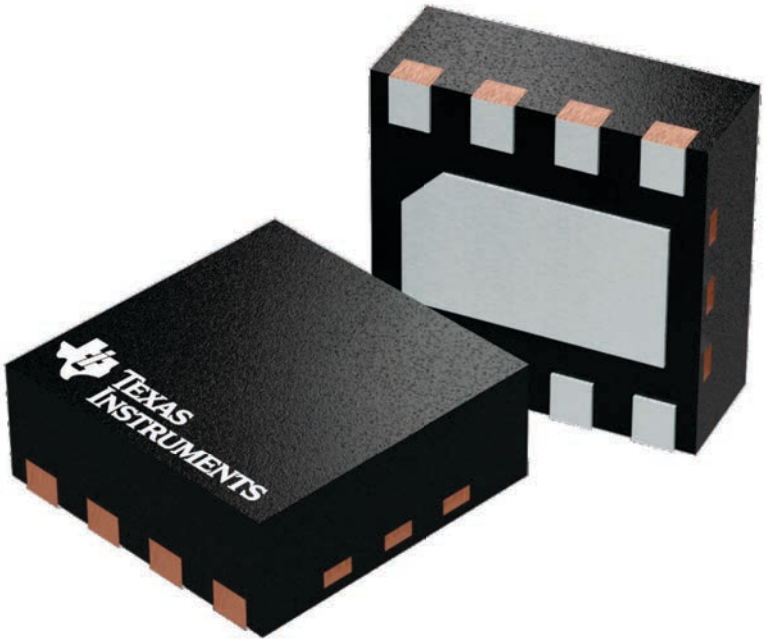

4224783/A

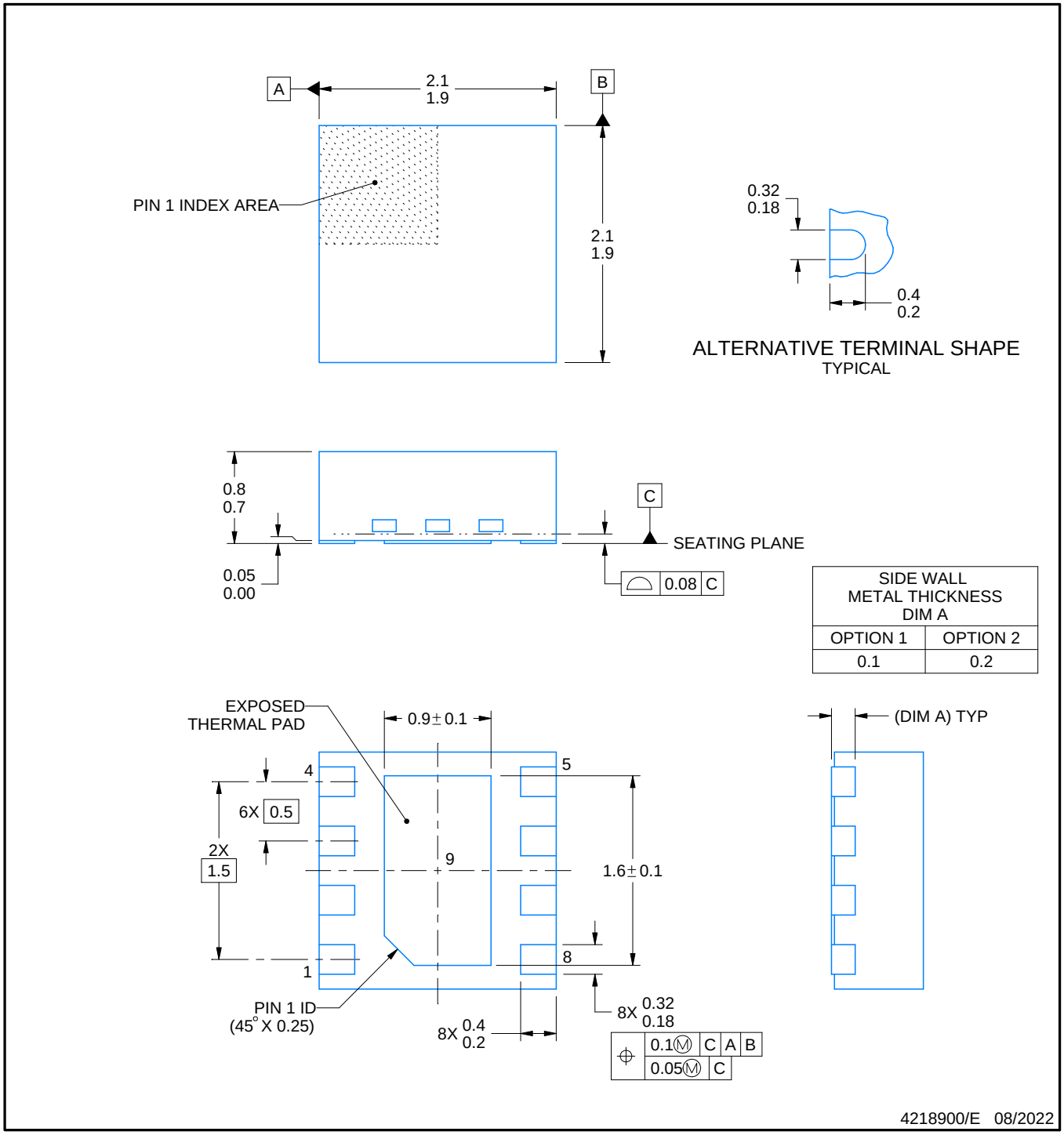

NOTES:

1. All linear dimensions are in millimeters. Any dimensions in parenthesis are for reference only. Dimensioning and tolerancing per ASME Y14.5M.
2. This drawing is subject to change without notice.
3. The package thermal pad must be soldered to the printed circuit board for thermal and mechanical performance.

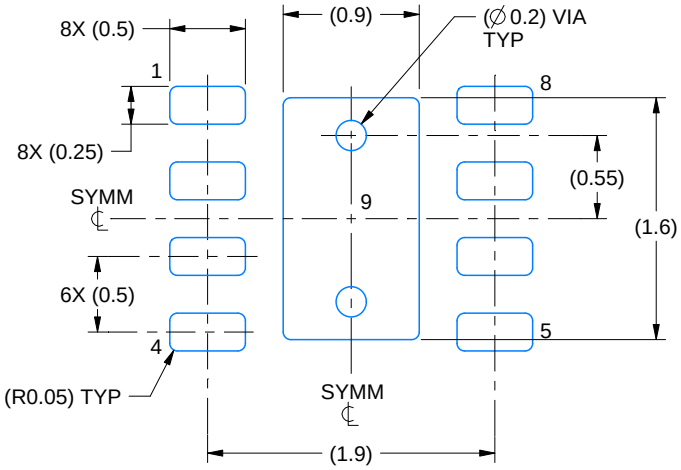

LAND PATTERN EXAMPLE
SCALE:20X

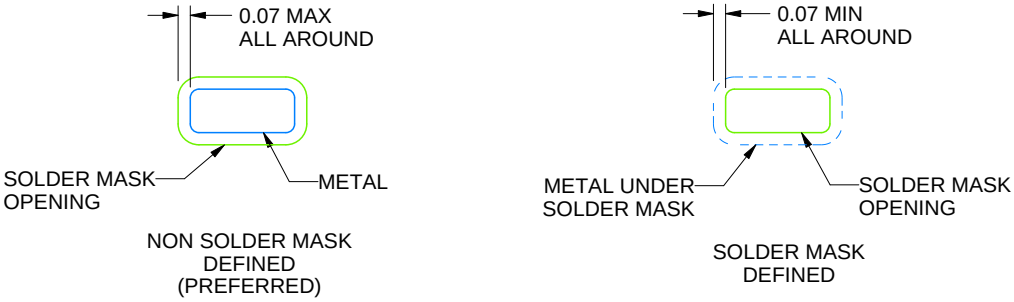

SOLDER MASK DETAILS

4218900/E 08/2022

NOTES: (continued)

4. This package is designed to be soldered to a thermal pad on the board. For more information, see Texas Instruments literature number SLUA271 (www.ti.com/lit/slua271).
5. Vias are optional depending on application, refer to device data sheet. If any vias are implemented, refer to their locations shown on this view. It is recommended that vias under paste be filled, plugged or tented.

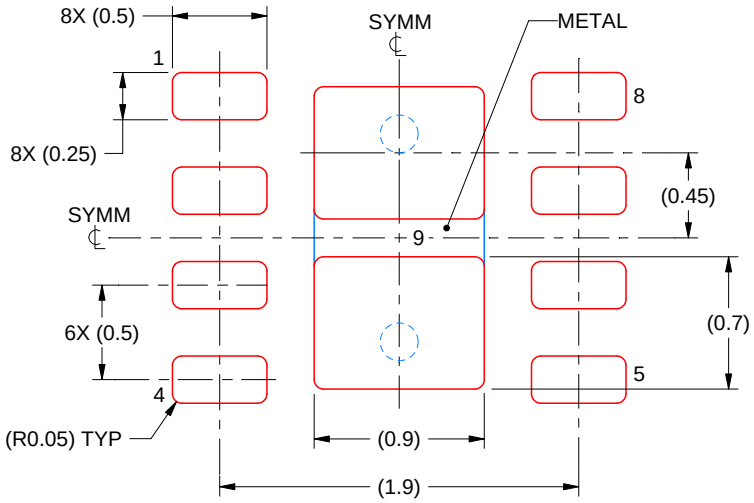

SOLDER PASTE EXAMPLE
BASED ON 0.125 mm THICK STENCIL

EXPOSED PAD 9:
87% PRINTED SOLDER COVERAGE BY AREA UNDER PACKAGE
SCALE:25X

4218900/E 08/2022

NOTES: (continued)

6. Laser cutting apertures with trapezoidal walls and rounded corners may offer better paste release. IPC-7525 may have alternate design recommendations.

重要通知和免责声明

TI“按原样”提供技术和可靠性数据（包括数据表）、设计资源（包括参考设计）、应用或其他设计建议、网络工具、安全信息和其他资源，不保证没有瑕疵且不做出任何明示或暗示的担保，包括但不限于对适销性、与某特定用途的适用性或不侵犯任何第三方知识产权的暗示担保。

这些资源可供使用 TI 产品进行设计的熟练开发人员使用。您将自行承担以下全部责任：(1) 针对您的应用选择合适的 TI 产品，(2) 设计、验证并测试您的应用，(3) 确保您的应用满足相应标准以及任何其他安全、安保法规或其他要求。

这些资源如有变更，恕不另行通知。TI 授权您仅可将这些资源用于研发本资源所述的 TI 产品的相关应用。严禁以其他方式对这些资源进行复制或展示。您无权使用任何其他 TI 知识产权或任何第三方知识产权。对于因您对这些资源的使用而对 TI 及其代表造成的任何索赔、损害、成本、损失和债务，您将全额赔偿，TI 对此概不负责。

TI 提供的产品受 TI 销售条款)、TI 通用质量指南 或 ti.com 上其他适用条款或 TI 产品随附的其他适用条款的约束。TI 提供这些资源并不会扩展或以其他方式更改 TI 针对 TI 产品发布的适用的担保或担保免责声明。 除非德州仪器 (TI) 明确将某产品指定为定制产品或客户特定产品，否则其产品均为按确定价格收入目录的标准通用器件。

TI 反对并拒绝您可能提出的任何其他或不同的条款。

版权所有 © 2026，德州仪器 (TI) 公司

最后更新日期：2025 年 10 月