OPAx196 36V 低功耗、低偏移电压、轨至轨运算放大器

1 特性

- 低偏移电压：±100µV（最大值）
- 低偏移电压漂移：±0.5µV/°C（典型值）
- 低偏置电流：±5pA（典型值）
- 高共模抑制：140dB
- 低噪声：1kHz 时为 15nV/√Hz
- 轨至轨输入和输出
- 可提供电源轨的差分输入电压范围
- 高带宽：2.5MHz GBW
- 低静态电流：每个放大器为 140µA（典型值）
- 宽电源范围：±2.25V 至 ±18V，4.5V 至 36V
- 已过滤电磁干扰 (EMI)/射频干扰 (RFI) 的输入
- 高电容负载驱动能力：1nF
- 行业标准封装：
  - SOIC-8、SOT-5 和 VSSOP-8 单体封装
  - SOIC-8 和 VSSOP-8 双列封装
  - SOIC-14、TSSOP-14 和 QFN-16 四列封装

2 应用

- 多路复用数据采集系统
- 测试和测量设备
- 高分辨率模数转换器 (ADC) 驱动器放大器
- SAR ADC 基准缓冲器
- 模拟输入和输出模块
- 高侧和低侧电流感应
- 高精度比较器
- 医疗仪器

3 说明

OPAx196 系列（OPA196、OPA2196 和 OPA4196）是新一代 36V 轨至轨 e-trim™运算放大器。

这些器件在整个输出范围内提供非常低的偏移电压（典型值为 ±25µV）、漂移（典型值为 ±0.5µV/°C）和低偏置电流（典型值为 ±5pA），同时还具有非常低的静态电流（典型值为 140µA/通道）。

OPAx196 拥有诸多独一无二的特性，例如可提供电源轨的差分输入电压范围、高输出电流 (±65mA) 以及高达 1nF 的高电容负载驱动能力，是稳健耐用的高性能运算放大器，适用于各种高电压工业 应用。

OPAx196 系列运算放大器采用标准封装，在 -40°C 至 +125°C 的额定温度范围内工作。

器件信息(1)

器件型号	封装	封装尺寸（标称值）
OPA196	SOIC (8)	4.90mm × 3.90mm
	小外形尺寸晶体管 (SOT) (5)	2.90mm x 1.60mm
	VSSOP (8)	3.00mm × 3.00mm
OPA2196	SOIC (8)	4.90mm × 3.90mm
	VSSOP (8)	3.00mm × 3.00mm
OPA4196	SOIC (14)	8.65mm x 3.90mm
	TSSOP (14)	5.00mm x 4.40mm

(1) 要了解所有可用封装，请参见数据表末尾的封装选项附录。

OPA196 应用于高压多路复用数据采集系统

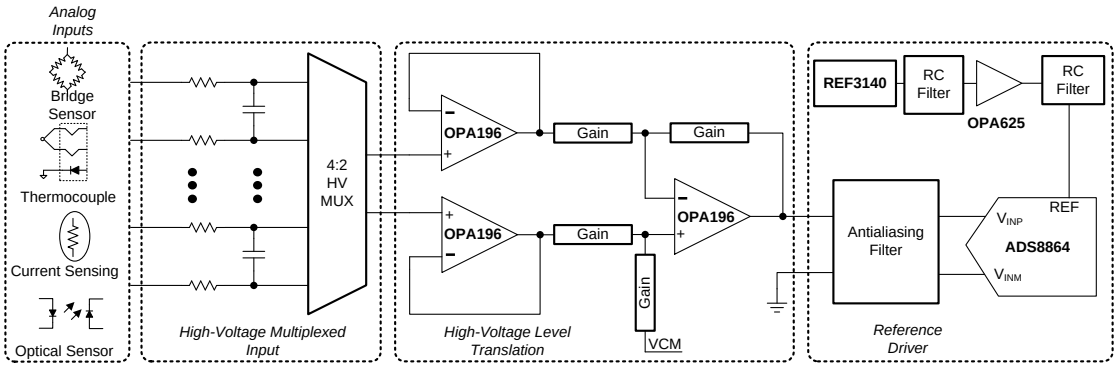

Copyright © 2017, Texas Instruments Incorporated

An IMPORTANT NOTICE at the end of this data sheet addresses availability, warranty, changes, use in safety-critical applications, intellectual property matters and other important disclaimers. PRODUCTION DATA.

目录

1 特性 ... 1
2 应用 ... 1
3 说明 ... 1
4 修订历史记录 ... 2
5 **Pin Configuration and Functions** ... 3
6 **Specifications** ... 5
6.1 Absolute Maximum Ratings ... 5
6.2 ESD Ratings ... 5
6.3 Recommended Operating Conditions ... 5
6.4 Thermal Information: OPA196 ... 5
6.5 Thermal Information: OPA2196 ... 6
6.6 Thermal Information: OPA4196 ... 6
6.7 Electrical Characteristics: V_S = ±4 V to ±18 V (V_S = 8 V to 36 V) ... 7
6.8 Electrical Characteristics: V_S = ±2.25 V to ±4 V (V_S = 4.5 V to 8 V) ... 9
6.9 Typical Characteristics ... 11
7 **Detailed Description** ... 18
7.1 Overview ... 18
7.2 Functional Block Diagram ... 18
7.3 Feature Description ... 19
7.4 Device Functional Modes ... 26
8 **Application and Implementation** ... 27
8.1 Application Information ... 27
8.2 Typical Applications ... 27
9 **Power-Supply Recommendations** ... 31
10 **Layout** ... 31
10.1 Layout Guidelines ... 31
10.2 Layout Example ... 32
11 器件和文档支持 ... 33
11.1 器件支持 ... 33
11.2 文档支持 ... 33
11.3 相关链接 ... 33
11.4 接收文档更新通知 ... 33
11.5 社区资源 ... 34
11.6 商标 ... 34
11.7 静电放电警告 ... 34
11.8 Glossary ... 34
12 机械、封装和可订购信息 ... 34

4 修订历史记录

注：之前版本的页码可能与当前版本有所不同。

日期	修订版本	注意
2017 年 7 月	*	最初发布版本

Copyright © 2017, Texas Instruments Incorporated

5 Pin Configuration and Functions

DBV Package: OPA196
5-Pin SOT
Top View

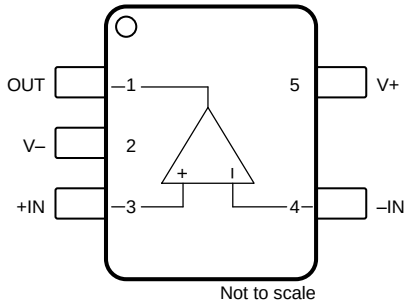

D and DGK Packages: OPA2196
8-Pin SOIC and VSSOP
Top View

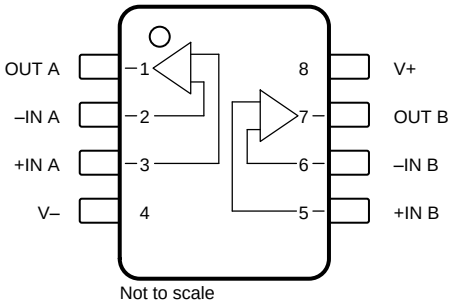

D and DGK Packages: OPA196
8-Pin SOIC and VSSOP
Top View

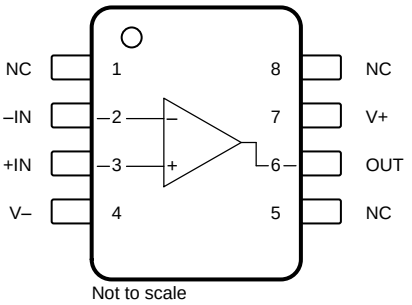

D and PW Packages: OPA4196
14-Pin SOIC and TSSOP
Top View

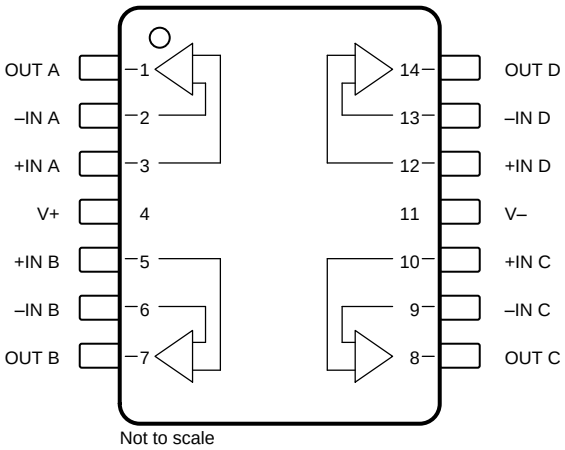

(1) NC = No internal connection.

Pin Functions: OPA196

PIN			I/O	DESCRIPTION
NAME	OPA196			
	D (SOIC), DGK (VSSOP)	DBV (SOT)		
+IN	3	3	I	Noninverting input
–IN	2	4	I	Inverting input
NC	1, 5, 8	—	—	No internal connection (can be left floating)
OUT	6	1	O	Output
V+	7	5	—	Positive (highest) power supply
V–	4	2	—	Negative (lowest) power supply

Pin Functions: OPA2196 and OPA4196

PIN			I/O	DESCRIPTION
NAME	OPA2196	OPA4196		
	D (SOIC), DGK (VSSOP)	D (SOIC), PW (TSSOP)		
+IN A	3	3	I	Noninverting input, channel A
+IN B	5	5	I	Noninverting input, channel B
+IN C	—	10	I	Noninverting input, channel C
+IN D	—	12	I	Noninverting input, channel D
–IN A	2	2	I	Inverting input, channel A
–IN B	6	6	I	Inverting input, channel B
–IN C	—	9	I	Inverting input,,channel C
–IN D	—	13	I	Inverting input, channel D
OUT A	1	1	O	Output, channel A
OUT B	7	7	O	Output, channel B
OUT C	—	8	O	Output, channel C
OUT D	—	14	O	Output, channel D
V+	8	4	—	Positive (highest) power supply
V–	4	11	—	Negative (lowest) power supply

Copyright © 2017, Texas Instruments Incorporated

6 Specifications

6.1 Absolute Maximum Ratings

over operating free-air temperature range (unless otherwise noted)[1]

			MIN	MAX	UNIT
Supply voltage, V_S = (V+) – (V–)				±20 (+40, single supply)	V
Signal input pins	Voltage	Common-mode	(V–) – 0.5	(V+) + 0.5	V
		Differential		(V+) – (V–) + 0.2	
	Current			±10	mA
Output short circuit[2]			Continuous	Continuous	Continuous
Temperature	Operating		–40	150	°C
	Junction			150	
	Storage, T_{stg}		–65	150	

(1) Stresses beyond those listed under *Absolute Maximum Ratings* may cause permanent damage to the device. These are stress ratings only, which do not imply functional operation of the device at these or any other conditions beyond those indicated under *Recommended Operating Conditions*. Exposure to absolute-maximum-rated conditions for extended periods may affect device reliability.
(2) Short-circuit to ground, one amplifier per package.

6.2 ESD Ratings

				VALUE	UNIT
$V_{(ESD)}$	Electrostatic discharge	OPAx196	Human-body model (HBM), per ANSI/ESDA/JEDEC JS-001[1]	±3000	V
$V_{(ESD)}$	Electrostatic discharge	OPA196	Charged-device model (CDM), per JEDEC specification JESD22-C101[2]	±1000	V
		OPA2196		±500	V
		OPA4196		±500	V

(1) JEDEC document JEP155 states that 500-V HBM allows safe manufacturing with a standard ESD control process.
(2) JEDEC document JEP157 states that 250-V CDM allows safe manufacturing with a standard ESD control process.

6.3 Recommended Operating Conditions

over operating free-air temperature range (unless otherwise noted)

	MIN	NOM	MAX	UNIT
Supply voltage, V_S = (V+) – (V–)	4.5 (±2.25)		36 (±18)	V
Specified temperature	–40		125	°C

6.4 Thermal Information: OPA196

THERMAL METRIC[1]		OPA196			UNIT
		8 PINS		5 PINS	
		D (SOIC)	DGK (VSSOP)	DBV (SOT)	
$R_{\theta JA}$	Junction-to-ambient thermal resistance	115.8	180.4	158.8	°C/W
$R_{\theta JC(top)}$	Junction-to-case(top) thermal resistance	60.1	67.9	60.7	°C/W
$R_{\theta JB}$	Junction-to-board thermal resistance	56.4	102.1	44.8	°C/W
ψ_{JT}	Junction-to-top characterization parameter	12.8	10.4	1.6	°C/W
ψ_{JB}	Junction-to-board characterization parameter	55.9	100.3	4.2	°C/W
$R_{\theta JC(bot)}$	Junction-to-case(bottom) thermal resistance	N/A	N/A	N/A	°C/W

(1) For more information about traditional and new thermal metrics, see the *Semiconductor and IC Package Thermal Metrics* application report.

Copyright © 2017, Texas Instruments Incorporated

6.5 Thermal Information: OPA2196

THERMAL METRIC[1]		OPA2196		UNIT
		8 PINS		
		D (SOIC)	DGK (VSSOP)	
$R_{\theta JA}$	Junction-to-ambient thermal resistance	107.9	158	°C/W
$R_{\theta JC(top)}$	Junction-to-case(top) thermal resistance	53.9	48.6	°C/W
$R_{\theta JB}$	Junction-to-board thermal resistance	48.9	78.7	°C/W
ψ_{JT}	Junction-to-top characterization parameter	6.6	3.9	°C/W
ψ_{JB}	Junction-to-board characterization parameter	48.3	77.3	°C/W
$R_{\theta JC(bot)}$	Junction-to-case(bottom) thermal resistance	N/A	N/A	°C/W

(1) For more information about traditional and new thermal metrics, see the *Semiconductor and IC Package Thermal Metrics* application report.

6.6 Thermal Information: OPA4196

THERMAL METRIC[1]		OPA4196		UNIT
		14 PINS		
		D (SOIC)	PW (TSSOP)	
$R_{\theta JA}$	Junction-to-ambient thermal resistance	86.4	92.6	°C/W
$R_{\theta JC(top)}$	Junction-to-case(top) thermal resistance	46.3	27.5	°C/W
$R_{\theta JB}$	Junction-to-board thermal resistance	41.0	33.6	°C/W
ψ_{JT}	Junction-to-top characterization parameter	11.3	1.9	°C/W
ψ_{JB}	Junction-to-board characterization parameter	40.7	33.1	°C/W
$R_{\theta JC(bot)}$	Junction-to-case(bottom) thermal resistance	N/A	N/A	°C/W

(1) For more information about traditional and new thermal metrics, see the *Semiconductor and IC Package Thermal Metrics* application report.

Copyright © 2017, Texas Instruments Incorporated

6.7 Electrical Characteristics: V_S = ±4 V to ±18 V (V_S = 8 V to 36 V)

at T_A = 25°C, V_{CM} = V_{OUT} = V_S / 2, and R_L = 10 kΩ connected to V_S / 2 (unless otherwise noted)

PARAMETER		TEST CONDITIONS		MIN	TYP	MAX	UNIT
OFFSET VOLTAGE							
V_{OS}	Input offset voltage	V_S = ±18 V			±25	±100	µV
		(V+) – 3.0 V < V_{CM} < (V+) – 1.5 V		See *Common-Mode Voltage Range*			
		V_S = ±18 V, V_{CM} = (V+) – 1.5 V			±25	±100	
dV_{OS}/dT	Input offset voltage drift	V_S = ±18 V, V_{CM} = (V+) – 3 V	T_A = –40°C to +125°C		±0.5		µV/°C
		V_S = ±18 V, V_{CM} = (V+) – 1.5 V			±0.8		
PSRR	Power-supply rejection ratio	T_A = –40°C to +125°C			±0.3	±1	µV/V
INPUT BIAS CURRENT							
I_B	Input bias current				±5	±20	pA
I_{OS}	Input offset current				±2	±20	pA
NOISE							
E_n	Input voltage noise	(V–) – 0.1 V < V_{CM} < (V+) – 3 V	f = 0.1 Hz to 10 Hz		1.4		$µV_{PP}$
		(V+) – 1.5 V < V_{CM} < (V+) + 0.1 V	f = 0.1 Hz to 10 Hz		7		
e_n	Input voltage noise density	(V–) – 0.1 V < V_{CM} < (V+) – 3 V	f = 100 Hz		18		nV/√Hz
			f = 1 kHz		15		
		(V+) – 1.5 V < V_{CM} < (V+) + 0.1 V	f = 100 Hz		53		
			f = 1 kHz		24		
i_n	Input current noise density	f = 1 kHz			1.5		fA/√Hz
INPUT VOLTAGE							
V_{CM}	Common-mode voltage range			(V–) – 0.1		(V+) + 0.1	V
CMRR	Common-mode rejection ratio	V_S = ±18 V, (V–) – 0.1 V < V_{CM} < (V+) – 3 V		120	140		dB
		V_S = ±18 V, (V–) < V_{CM} < (V+) – 3 V	T_A = –40°C to +125°C	114	126		
		V_S = ±18 V, (V+) – 1.5 V < V_{CM} < (V+)		96	120		
			T_A = –40°C to +125°C	86	100		
		(V+) – 3 V < V_{CM} < (V+) – 1.5 V		See *Typical Characteristics*			
INPUT IMPEDANCE							
Z_{ID}	Differential				100 || 1.6		MΩ || pF
Z_{IC}	Common-mode				1 || 6.4		10^{13}Ω || pF
OPEN-LOOP GAIN							
A_{OL}	Open-loop voltage gain	V_S = ±18 V, (V–) + 0.6 V < V_O < (V+) – 0.6 V, R_L = 2 kΩ		124	134		dB
			T_A = –40°C to +125°C	114	126		
		V_S = ±18 V, (V–) + 0.3 V < V_O < (V+) – 0.3 V, R_L = 10 kΩ		126	140		
			T_A = –40°C to +125°C	120	134		

Copyright © 2017, Texas Instruments Incorporated

Electrical Characteristics: V_S = ±4 V to ±18 V (V_S = 8 V to 36 V) (continued)

at T_A = 25°C, V_{CM} = V_{OUT} = V_S / 2, and R_L = 10 kΩ connected to V_S / 2 (unless otherwise noted)

PARAMETER		TEST CONDITIONS		MIN	TYP	MAX	UNIT
FREQUENCY RESPONSE							
GBW	Unity gain bandwidth				2.5		MHz
SR	Slew rate	V_S = ±18 V, G = 1, 10-V step	Rising		7.5		V/µs
			Falling		5.5		
t_s	Settling time	To 0.01%, C_L = 20 pF	V_S = ±18 V, G = 1, 2-V step		0.7		µs
			V_S = ±18 V, G = 1, 5-V step		1		
		To 0.001%, C_L = 20 pF	V_S = ±18 V, G = 1, 2-V step		1.8		
			V_S = ±18 V, G = 1, 5-V step		3.7		
t_{OR}	Overload recovery time	V_{IN} × G = V_S	From overload to negative rail		0.4		µs
			From overload to positive rail		1		
THD+N	Total harmonic distortion + noise	G = 1, f = 1 kHz, V_O = 3.5 V_{RMS}			0.0012%		
	Crosstalk	OPA2196 and OPA4196, at dc			150		dB
		OPA2196 and OPA4196, f = 100 kHz			130		dB
OUTPUT							
V_O	Voltage output swing from rail	Positive rail	No load		5	15	mV
			R_L = 10 kΩ		50	110	
			R_L = 2 kΩ		200	500	
		Negative rail	No load		5	15	
			R_L = 10 kΩ		50	110	
			R_L = 2 kΩ		200	500	
I_{SC}	Short-circuit current	V_S = ±18 V			±65		mA
C_L	Capacitive load drive				See *Typical Characteristics*		
Z_O	Open-loop output impedance	f = 1 MHz, I_O = 0 A, See Figure 19			700		Ω
POWER SUPPLY							
I_Q	Quiescent current per amplifier	I_O = 0 A			140	200	µA
			T_A = –40°C to +125°C			250	
TEMPERATURE							
	Thermal protection				180		°C
	Thermal hysteresis				30		°C

Copyright © 2017, Texas Instruments Incorporated

6.8 Electrical Characteristics: V_S = ±2.25 V to ±4 V (V_S = 4.5 V to 8 V)

at T_A = +25°C, V_{CM} = V_{OUT} = V_S / 2, and R_L = 10 kΩ connected to V_S / 2 (unless otherwise noted)

PARAMETER		TEST CONDITIONS		MIN	TYP	MAX	UNIT
OFFSET VOLTAGE							
V_{OS}	Input offset voltage	V_S = ±2.25V, V_{CM} = (V+) – 3 V			±25	±100	µV
		(V+) – 3.0 V < V_{CM} < (V+) – 1.5 V		See *Common-Mode Voltage Range*			
		V_S = ±3V, V_{CM} = (V+) – 1.5 V			±25	±100	
dV_{OS}/dT	Input offset voltage drift	V_S = ±2.25V, V_{CM} = (V+) – 3 V	T_A = –40°C to +125°C		±0.5		µV/°C
		V_S = ±2.25V, V_{CM} = (V+) – 1.5 V			±0.5		
PSRR	Power-supply rejection ratio	T_A = –40°C to +125°C, V_{CM} = V_S / 2 – 0.75 V			±1		µV/V
INPUT BIAS CURRENT							
I_B	Input bias current				±5	±20	pA
I_{OS}	Input offset current				±2	±20	pA
NOISE							
E_n	Input voltage noise	(V–) – 0.1 V < V_{CM} < (V+) – 3 V	f = 0.1 Hz to 10 Hz		1.4		$µV_{PP}$
		(V+) – 1.5 V < V_{CM} < (V+) + 0.1 V	f = 0.1 Hz to 10 Hz		7		
e_n	Input voltage noise density	(V–) – 0.1 V < V_{CM} < (V+) – 3 V	f = 100 Hz		18		nV/√Hz
			f = 1 kHz		15		
		(V+) – 1.5 V < V_{CM} < (V+) + 0.1 V	f = 100 Hz		53		
			f = 1 kHz		24		
i_n	Input current noise density		f = 1 kHz		1.5		fA/√Hz
INPUT VOLTAGE							
V_{CM}	Common-mode voltage range			(V–) – 0.1		(V+) + 0.1	V
CMRR	Common-mode rejection ratio	V_S = ±2.25 V, (V–) – 0.1 V < V_{CM} < (V+) – 3 V		96	110		dB
		V_S = ±2.25 V, (V–) < V_{CM} < (V+) – 3 V	T_A = –40°C to +125°C	90	104		
		V_S = ±2.25 V, (V+) – 1.5 V < V_{CM} < (V+)		96	120		
			T_A = –40°C to +125°C	84	100		
		(V+) – 3 V < V_{CM} < (V+) – 1.5 V		See *Typical Characteristics*			
INPUT IMPEDANCE							
Z_{ID}	Differential				100 || 1.6		MΩ || pF
Z_{IC}	Common-mode				1 || 6.4		10^{13}Ω || pF
OPEN-LOOP GAIN							
A_{OL}	Open-loop voltage gain	V_S = ±2.25V, (V–) + 0.6 V < V_O < (V+) – 0.6 V, R_L = 2 kΩ		110	120		dB
			T_A = –40°C to +125°C	100	114		
		V_S = ±2.25V, (V–) + 0.3 V < V_O < (V+) – 0.3 V, R_L = 10 kΩ		110	126		
			T_A = –40°C to +125°C	106	120		

Copyright © 2017, Texas Instruments Incorporated

Electrical Characteristics: V_S = ±2.25 V to ±4 V (V_S = 4.5 V to 8 V) (continued)

at T_A = +25°C, V_{CM} = V_{OUT} = V_S / 2, and R_L = 10 kΩ connected to V_S / 2 (unless otherwise noted)

PARAMETER		TEST CONDITIONS		MIN	TYP	MAX	UNIT
FREQUENCY RESPONSE							
GBW	Unity gain bandwidth				2.2		MHz
SR	Slew rate	V_S = ±2.25V, G = 1, 1-V step	Rising		6.5		V/µs
			Falling		5.5		
t_{OR}	Overload recovery time	V_{IN} × G = V_S	From overload to negative rail		0.4		µs
			From overload to positive rail		1		
	Crosstalk	OPA2196 and OPA4196, at dc			150		dB
		OPA2196 and OPA4196, f = 100 kHz			130		dB
OUTPUT							
V_O	Voltage output swing from rail	Positive rail	No load		5	15	mV
			R_L = 10 kΩ		15	110	
			R_L = 2 kΩ		60	500	
		Negative rail	No load		5	15	
			R_L = 10 kΩ		15	110	
			R_L = 2 kΩ		60	500	
I_{SC}	Short-circuit current	V_S = ±2.25V			±30		mA
C_L	Capacitive load drive			See *Typical Characteristics*			
Z_O	Open-loop output impedance	f = 1 MHz, I_O = 0 A, see Figure 19			700		Ω
POWER SUPPLY							
I_Q	Quiescent current per amplifier	I_O = 0 A			140	200	µA
			T_A = –40°C to +125°C			250	
TEMPERATURE							
	Thermal protection				180		°C
	Thermal hysteresis				30		°C

Copyright © 2017, Texas Instruments Incorporated

6.9 Typical Characteristics

Table 1. Table of Graphs

DESCRIPTION	FIGURE
Offset Voltage vs Common-Mode Voltage	Figure 1
Open-Loop Gain and Phase vs Frequency	Figure 2
Closed-Loop Gain and Phase vs Frequency	Figure 3
Input Bias Current vs Common-Mode Voltage	Figure 4
Input Bias Current vs Temperature	Figure 5
Output Voltage Swing vs Output Current (maximum supply)	Figure 6, Figure 7
CMRR and PSRR vs Frequency	Figure 8
CMRR vs Temperature	Figure 9
PSRR vs Temperature	Figure 10
0.1-Hz to 10-Hz Noise	Figure 11
Input Voltage Noise Spectral Density vs Frequency	Figure 12
THD+N Ratio vs Frequency	Figure 13
THD+N vs Output Amplitude	Figure 14
Quiescent Current vs Supply Voltage	Figure 15
Quiescent Current vs Temperature	Figure 16
Open Loop Gain vs Temperature	Figure 17, Figure 18
Open Loop Output Impedance vs Frequency	Figure 19
Small Signal Overshoot vs Capacitive Load (100-mV output step)	Figure 20, Figure 21
No Phase Reversal	Figure 22
Overload Recovery	Figure 23
Small-Signal Step Response (100 mV)	Figure 24, Figure 25
Large-Signal Step Response	Figure 26, Figure 27
Settling Time	Figure 28, Figure 29, Figure 30, Figure 31
Short-Circuit Current vs Temperature	Figure 32
Maximum Output Voltage vs Frequency	Figure 33
Propagation Delay Rising Edge	Figure 34
Propagation Delay Falling Edge	Figure 35

At T_A = 25°C, V_S = ±18 V, V_{CM} = V_S / 2, R_L = 10 kΩ connected to V_S / 2, and C_L = 100 pF, unless otherwise noted.

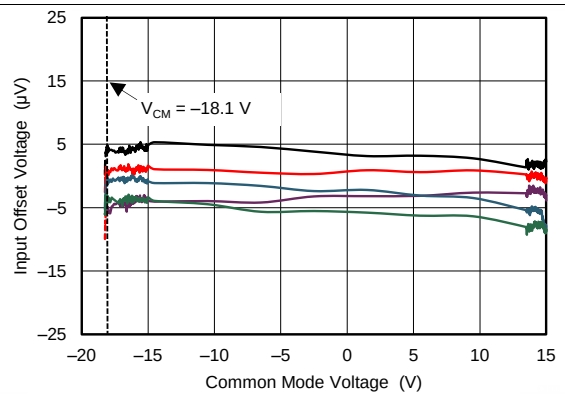

Figure 1. Offset Voltage vs Common-Mode Voltage

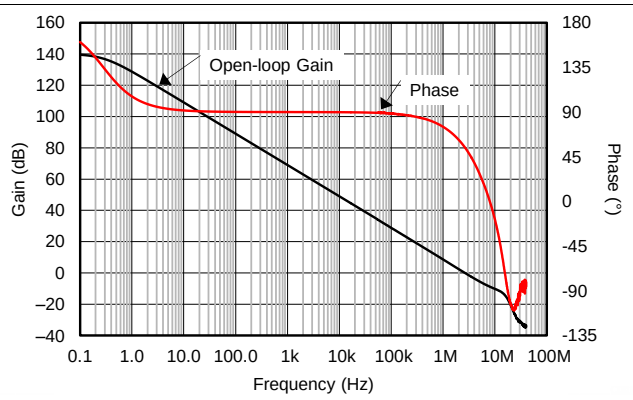

Figure 2. Open-Loop Gain and Phase vs Frequency

At T_A = 25°C, V_S = ±18 V, V_{CM} = V_S / 2, R_L = 10 kΩ connected to V_S / 2, and C_L = 100 pF, unless otherwise noted.

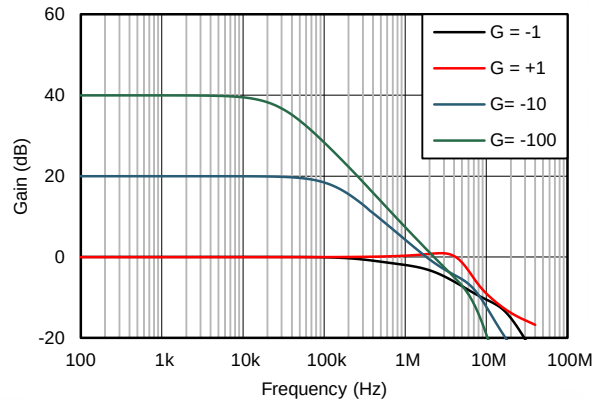

Figure 3. Closed-Loop Gain vs Frequency

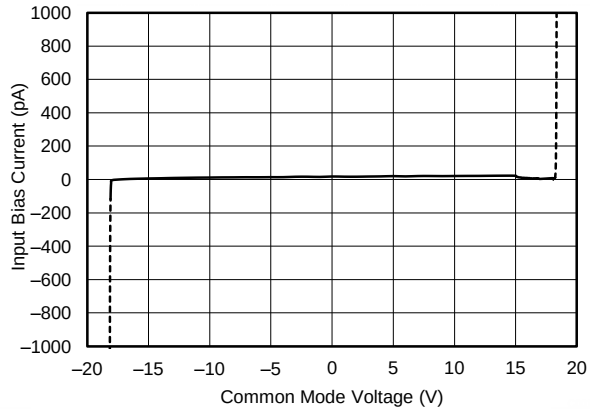

Figure 4. Input Bias Current vs Common-Mode Voltage

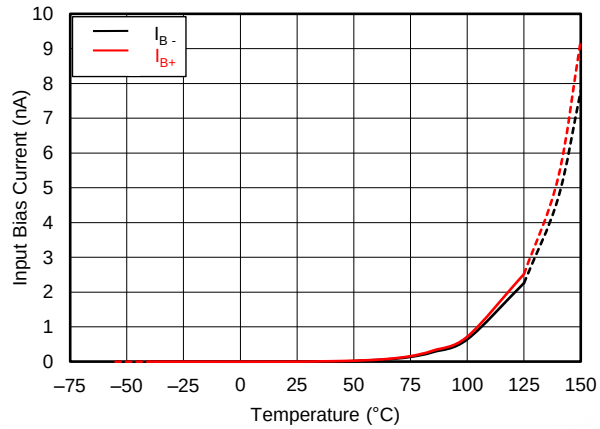

Figure 5. Input Bias Current vs Temperature

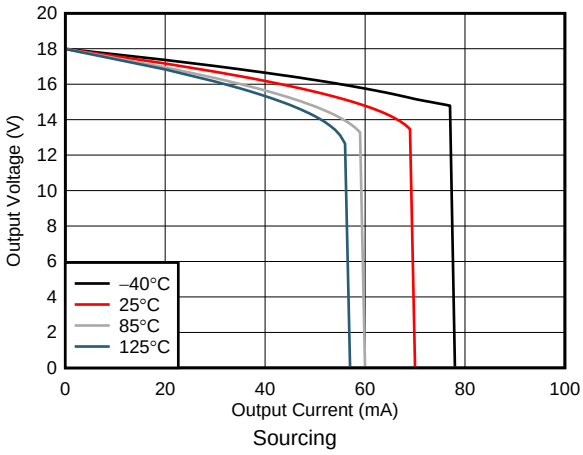

Figure 6. Output Voltage Swing vs Output Current

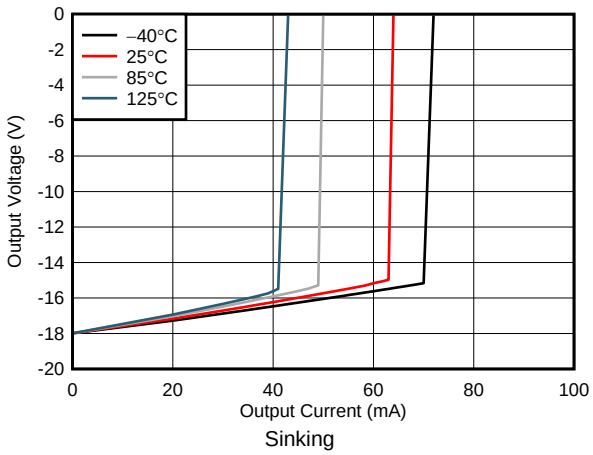

Figure 7. Output Voltage Swing vs Output Current

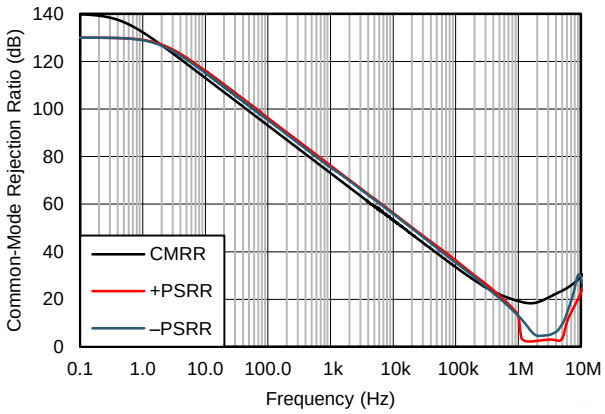

Figure 8. CMRR and PSRR vs Frequency

Copyright © 2017, Texas Instruments Incorporated

At T_A = 25°C, V_S = ±18 V, V_{CM} = V_S / 2, R_L = 10 kΩ connected to V_S / 2, and C_L = 100 pF, unless otherwise noted.

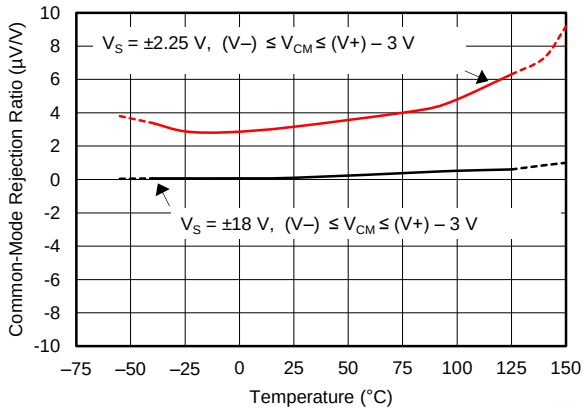

Figure 9. CMRR vs Temperature

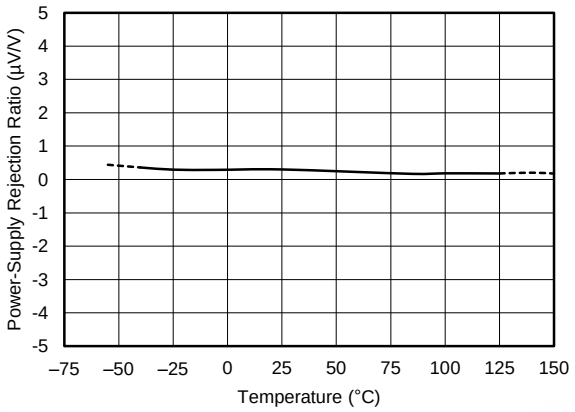

Figure 10. PSRR vs Temperature

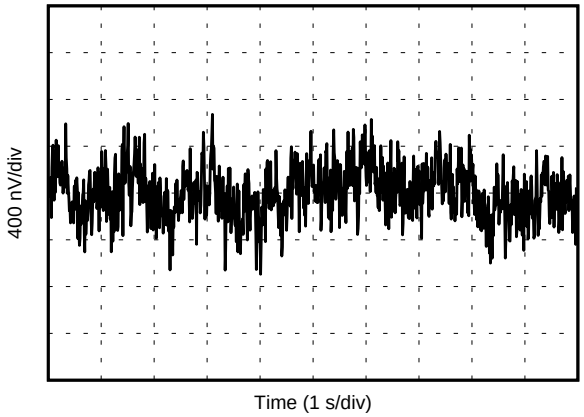

Figure 11. 0.1-Hz to 10-Hz Noise

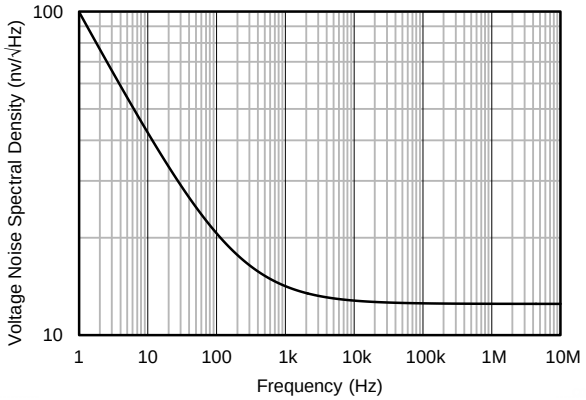

Figure 12. Input Voltage Noise Spectral Density vs Frequency

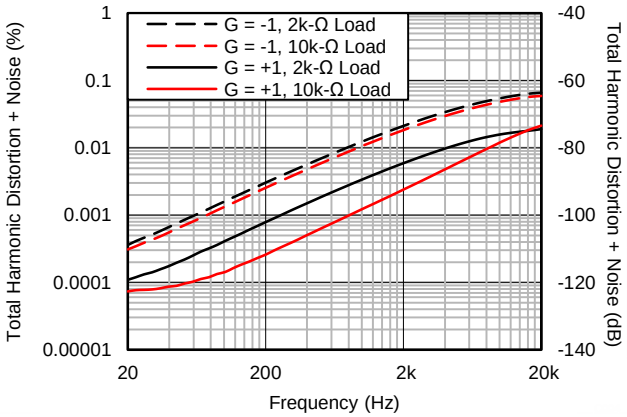

Figure 13. THD+N vs Frequency

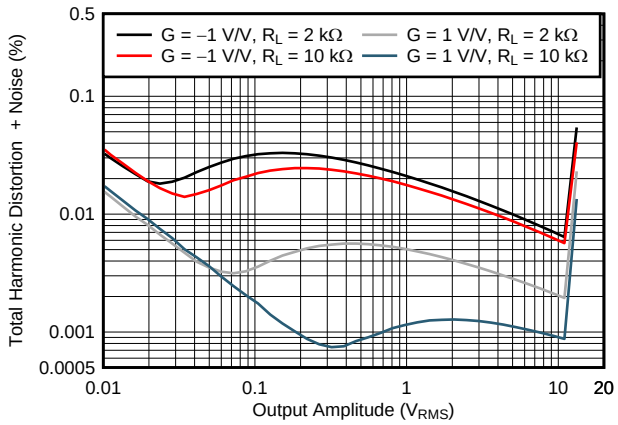

Figure 14. THD+N vs Output Amplitude

At T_A = 25°C, V_S = ±18 V, V_{CM} = V_S / 2, R_L = 10 kΩ connected to V_S / 2, and C_L = 100 pF, unless otherwise noted.

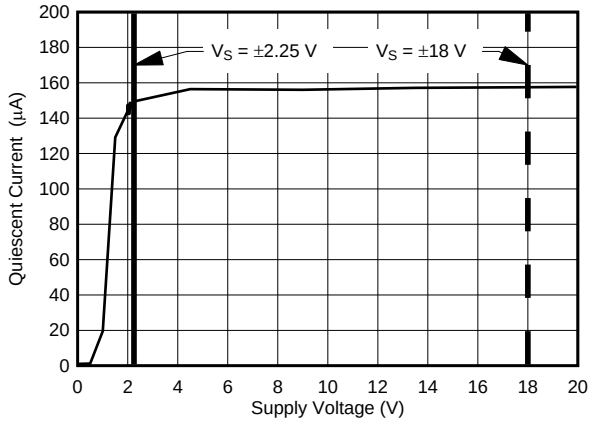

Figure 15. Quiescent Current vs Supply Voltage

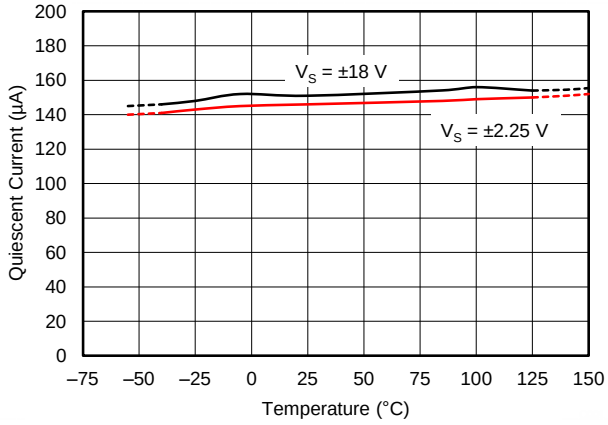

Figure 16. Quiescent Current vs Temperature

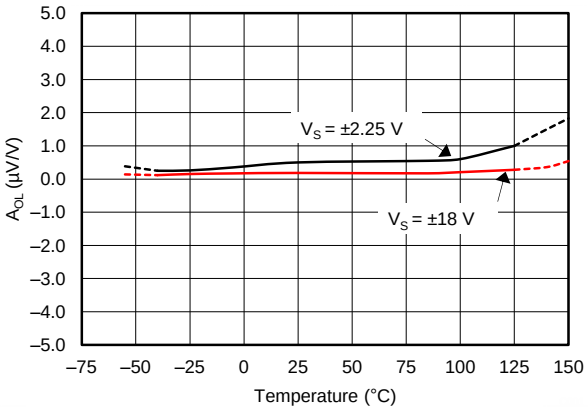

R_L = 10 kΩ

Figure 17. Open-Loop Gain vs Temperature

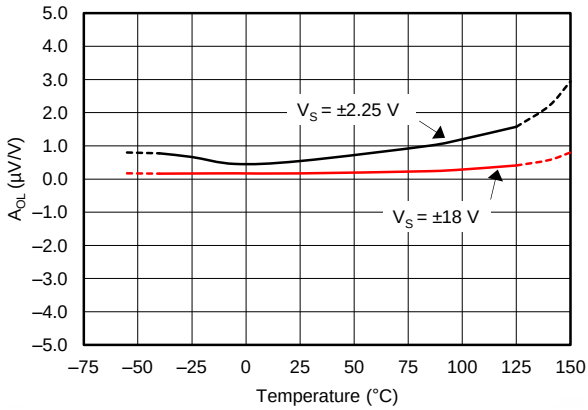

R_L = 2 kΩ

Figure 18. Open-Loop Gain vs Temperature

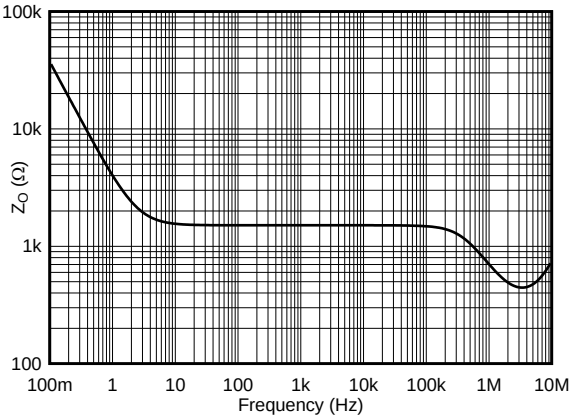

Figure 19. Open-Loop Output Impedance vs Frequency

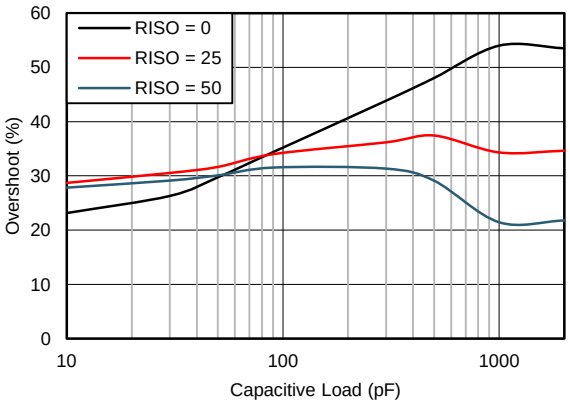

G = –1, 100-mV output step

Figure 20. Small-Signal Overshoot vs Capacitive Load (100-mV Output Step)

Copyright © 2017, Texas Instruments Incorporated

At T_A = 25°C, V_S = ±18 V, V_{CM} = V_S / 2, R_L = 10 kΩ connected to V_S / 2, and C_L = 100 pF, unless otherwise noted.

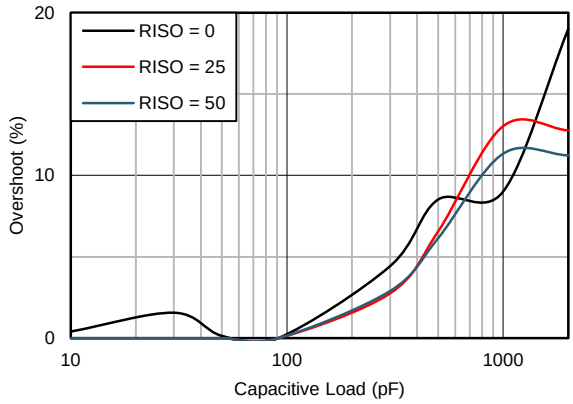

G = 1, 100-mV output step

Figure 21. Small-Signal Overshoot vs Capacitive Load

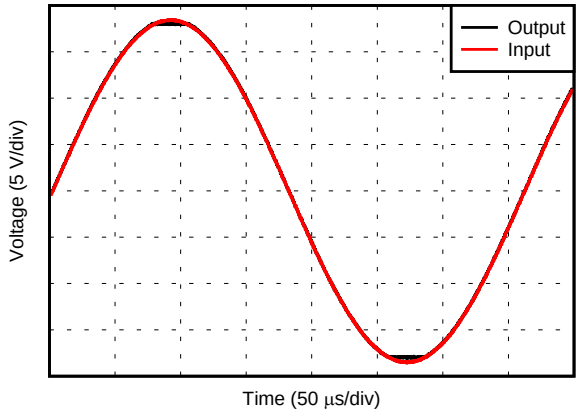

Figure 22. No Phase Reversal

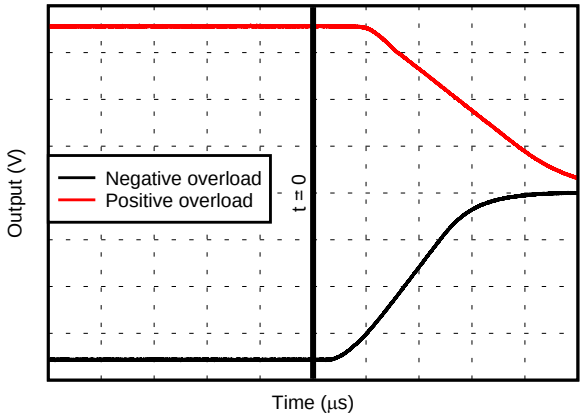

V_S = ±18 V, G = –10 V/V

Figure 23. Overload Recovery

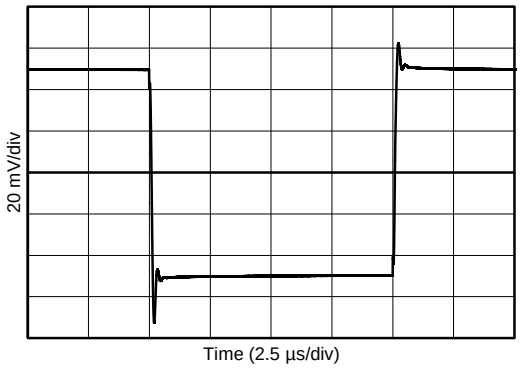

G = 1, C_L = 10 pF

Figure 24. Small-Signal Step Response

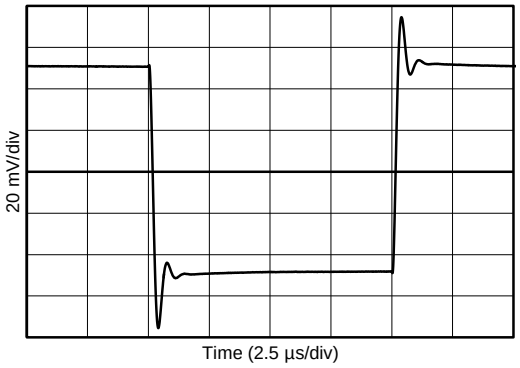

G = –1, R_L = 1 kΩ, C_L = 10 pF

Figure 25. Small-Signal Step Response

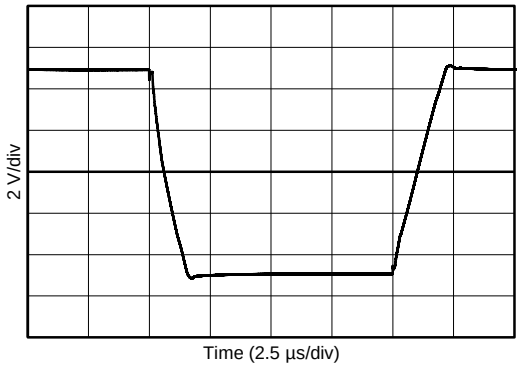

G = 1, C_L = 10 pF

Figure 26. Large-Signal Step Response

Copyright © 2017, Texas Instruments Incorporated

At T_A = 25°C, V_S = ±18 V, V_{CM} = V_S / 2, R_L = 10 kΩ connected to V_S / 2, and C_L = 100 pF, unless otherwise noted.

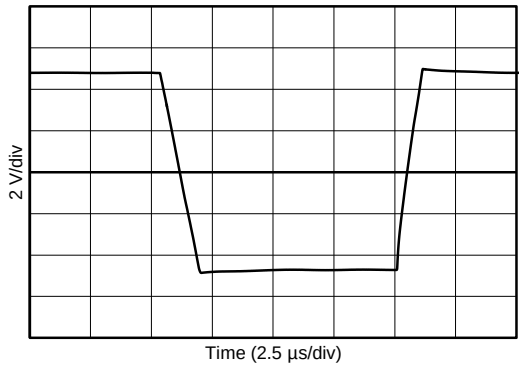

G = –1, R_L = 1 kΩ, C_L = 10 pF

Figure 27. Large-Signal Step Response

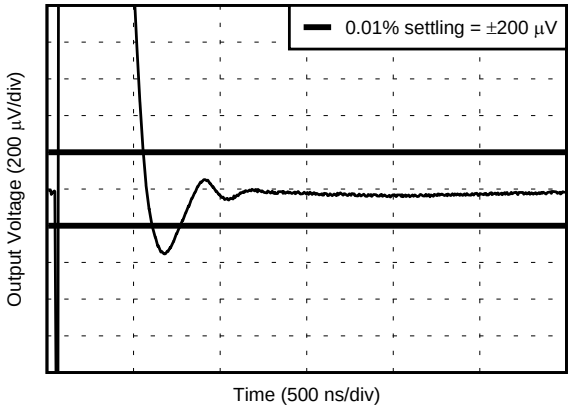

Gain = 1, 2-V step, rising, step applied at t = 0 µs on all four plots

Figure 28. 0.01% Settling Time

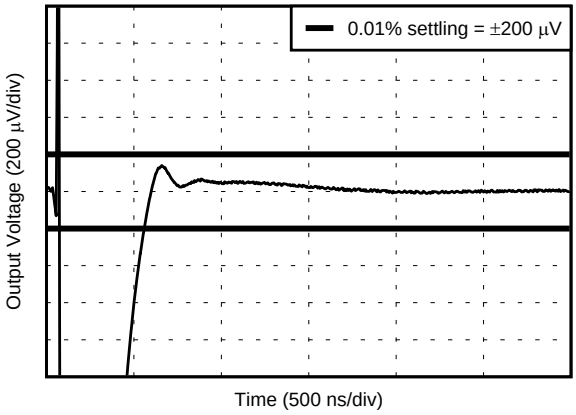

Gain = 1, 2-V step, falling, step applied at t = 0 µs

Figure 29. 0.01% Settling Time

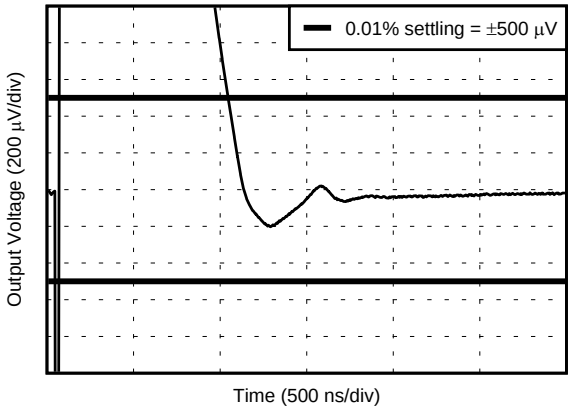

Gain = 1, 5-V step, rising, step applied at t = 0 µs

Figure 30. 0.01% Settling Time

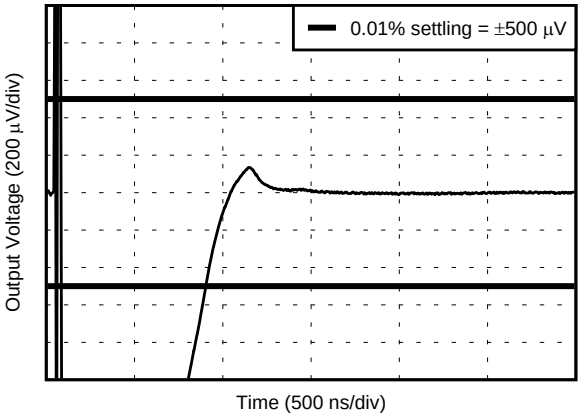

Gain = 1, 5-V step, falling, step applied at t = 0 µs

Figure 31. 0.01% Settling Time

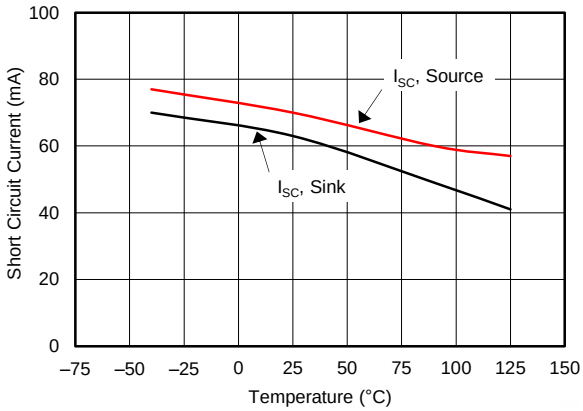

Figure 32. Short-Circuit Current vs Temperature

Copyright © 2017, Texas Instruments Incorporated

At T_A = 25°C, V_S = ±18 V, V_{CM} = V_S / 2, R_L = 10 kΩ connected to V_S / 2, and C_L = 100 pF, unless otherwise noted.

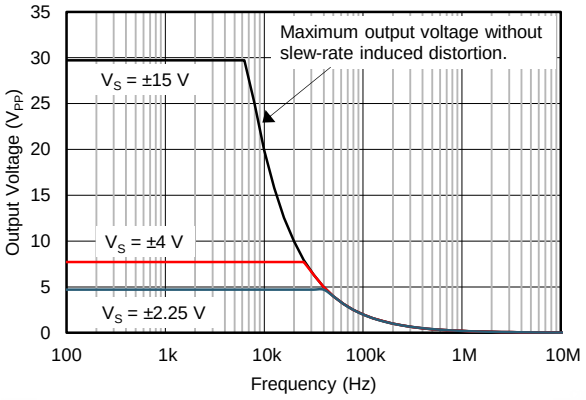

Figure 33. Maximum Output Voltage vs Frequency

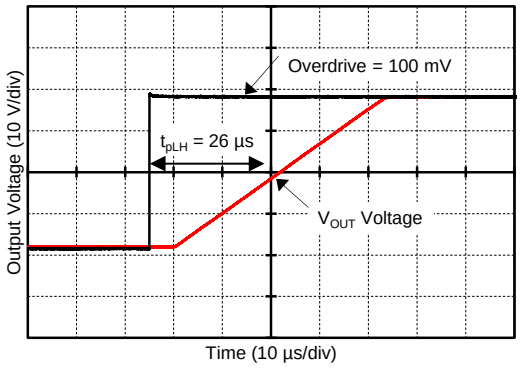

Figure 34. Propagation Delay Rising Edge

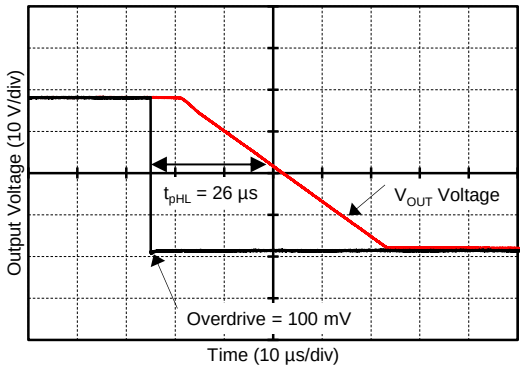

Figure 35. Propagation Delay Falling Edge

7 Detailed Description

7.1 Overview

The OPAx196 family of operational amplifiers use *e-trim*, a method of package-level trim for offset and offset temperature drift implemented during the final steps of manufacturing after the plastic molding process. This method minimizes the influence of inherent input transistor mismatch, as well as errors induced during package molding. The trim communication occurs on the output pin of the standard pinout, and after the trim points are set, further communication to the trim structure is permanently disabled. The *Functional Block Diagram* shows the simplified diagram of the OPA196 with e-trim.

Unlike previous e-trim op amps, the OPAx196 uses a patented two-temperature trim architecture to achieve a very low offset voltage and low voltage offset drift over the full specified temperature range. This level of precision performance at wide supply voltages makes these amplifiers useful for high-impedance industrial sensors, filters, and high-voltage data acquisition.

7.2 Functional Block Diagram

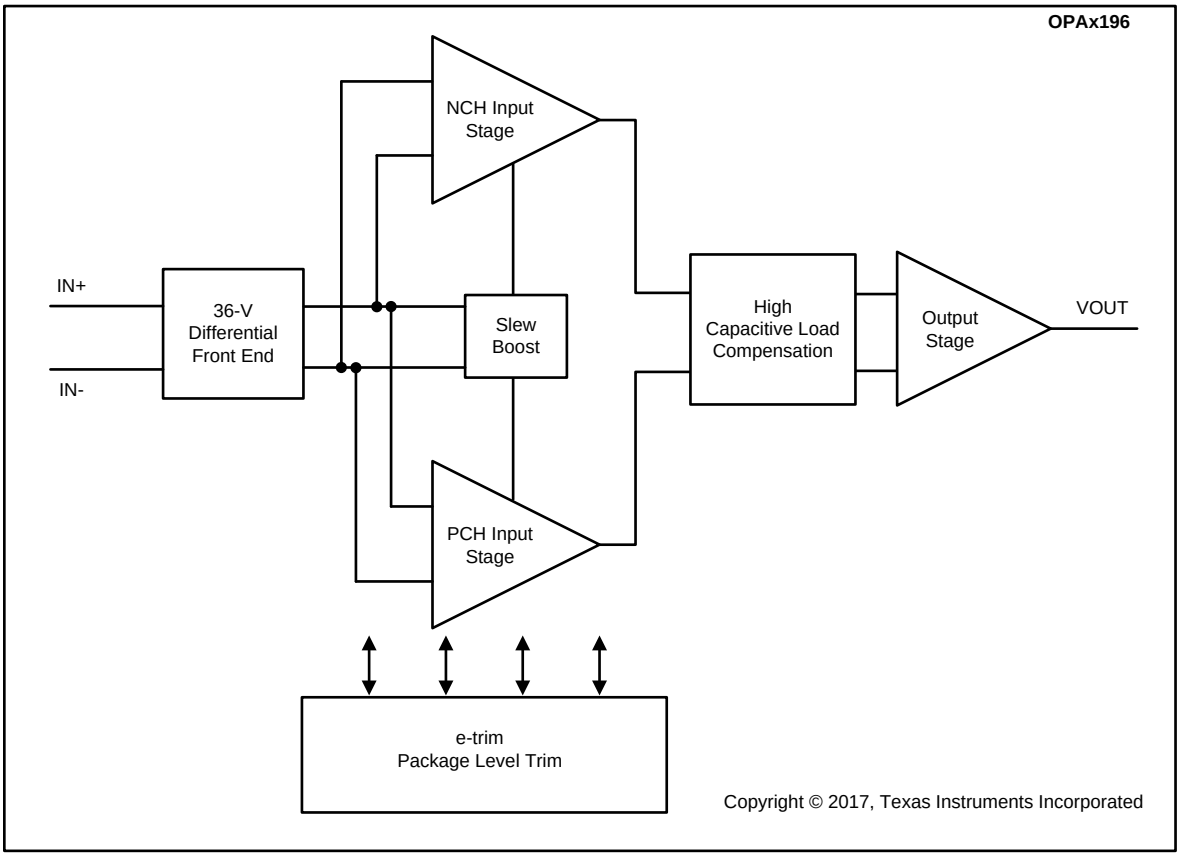

Copyright © 2017, Texas Instruments Incorporated

7.3 Feature Description

7.3.1 Input Protection Circuitry

The OPAx196 uses a unique input architecture to eliminate the need for input protection diodes but still provides robust input protection under transient conditions. Conventional input diode protection schemes shown in Figure 36 can be activated by fast transient step responses and can introduce signal distortion and settling time delays because of alternate current paths, as shown in Figure 37. For low-gain circuits, these fast-ramping input signals forward-bias back-to-back diodes that cause an increase in input current, resulting in extended settling time.

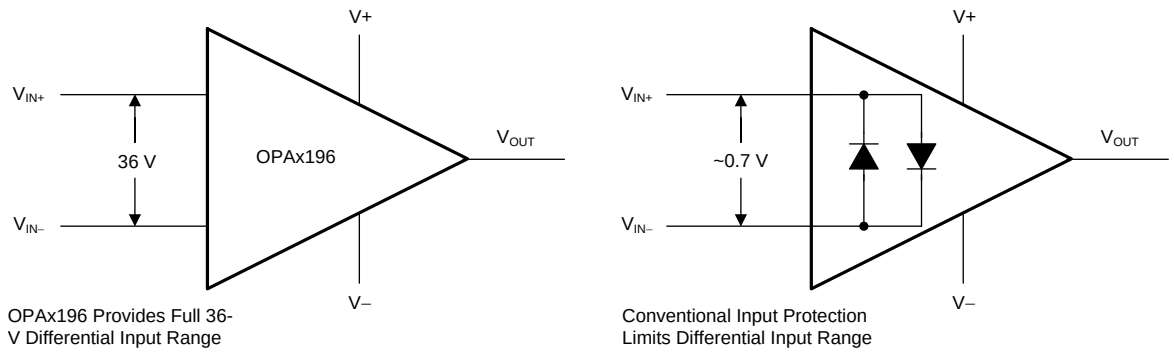

Figure 36. OPA196 Input Protection Does Not Limit Differential Input Capability

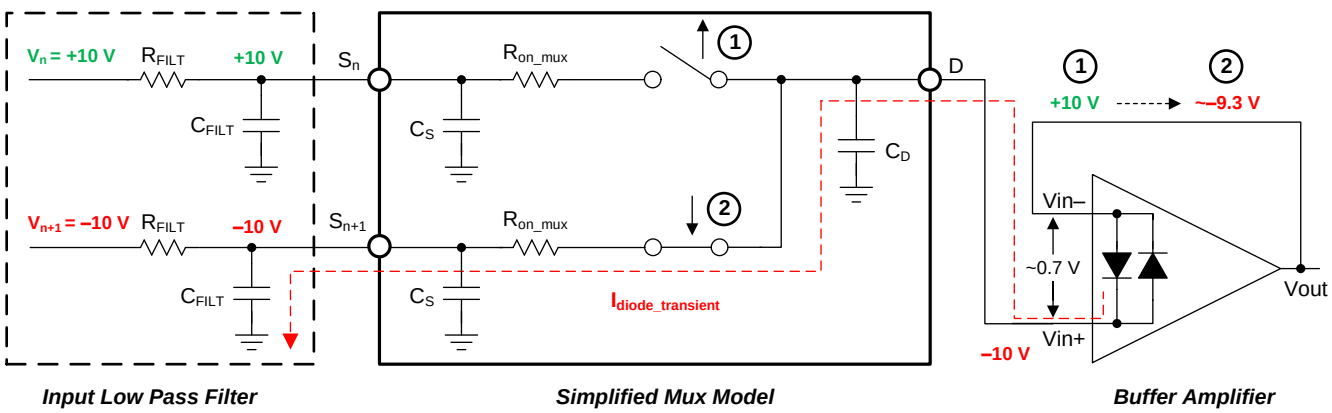

Figure 37. Back-to-Back Diodes Create Settling Issues

The OPAx196 family of operational amplifiers provides a true high-impedance differential input capability for high-voltage applications. This patented input protection architecture does not introduce additional signal distortion or delayed settling time, making the device an optimal op amp for multichannel, high-switched, input applications. The OPA196 can tolerate a maximum differential swing (voltage between inverting and noninverting pins of the op amp) of up to 36 V, making the device suitable for use as a comparator or in applications with fast-ramping input signals such as multiplexed data-acquisition systems (see Figure 49).

Feature Description (continued)

7.3.2 EMI Rejection

The OPAx196 uses integrated electromagnetic interference (EMI) filtering to reduce the effects of EMI from sources such as wireless communications and densely-populated boards with a mix of analog signal chain and digital components. EMI immunity can be improved with circuit design techniques; the OPAx196 benefits from these design improvements. Texas Instruments has developed the ability to accurately measure and quantify the immunity of an operational amplifier over a broad frequency spectrum extending from 10 MHz to 6 GHz. Figure 38 shows the results of this testing on the OPAx196. Table 2 shows the EMIRR IN+ values for the OPAx196 at particular frequencies commonly encountered in real-world applications. Applications listed in Table 2 may be centered on or operated near the particular frequency shown. Detailed information can also be found in the application report *EMI Rejection Ratio of Operational Amplifiers*, available for download from www.ti.com.

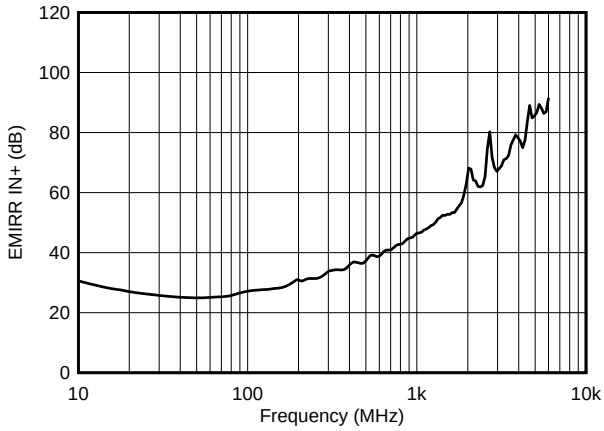

P_{RF} = –10 dBm, V_S = ±15 V, V_{CM} = 0 V

Figure 38. EMIRR Testing

Table 2. OPA196 EMIRR IN+ For Frequencies of Interest

FREQUENCY	APPLICATION OR ALLOCATION	EMIRR IN+
400 MHz	Mobile radio, mobile satellite, space operation, weather, radar, ultra-high frequency (UHF) applications	36 dB
900 MHz	Global system for mobile communications (GSM) applications, radio communication, navigation, GPS (to 1.6 GHz), GSM, aeronautical mobile, UHF applications	45 dB
1.8 GHz	GSM applications, mobile personal communications, broadband, satellite, L-band (1 GHz to 2 GHz)	57 dB
2.4 GHz	802.11b, 802.11g, 802.11n, Bluetooth®, mobile personal communications, industrial, scientific and medical (ISM) radio band, amateur radio and satellite, S-band (2 GHz to 4 GHz)	62 dB
3.6 GHz	Radiolocation, aero communication and navigation, satellite, mobile, S-band	76 dB
5.0 GHz	802.11a, 802.11n, aero communication and navigation, mobile communication, space and satellite operation, C-band (4 GHz to 8 GHz)	86 dB

Copyright © 2017, Texas Instruments Incorporated

7.3.3 Phase Reversal Protection

The OPAx196 family has internal phase-reversal protection. Many op amps exhibit phase reversal when the input is driven beyond the linear common-mode range. This condition is most often encountered in noninverting circuits when the input is driven beyond the specified common-mode voltage range, causing the output to reverse into the opposite rail. The OPAx196 is a rail-to-rail input op amp, and therefore the common-mode range can extend up to the rails. Input signals beyond the rails do not cause phase reversal; instead, the output limits into the appropriate rail. This performance is shown in Figure 39.

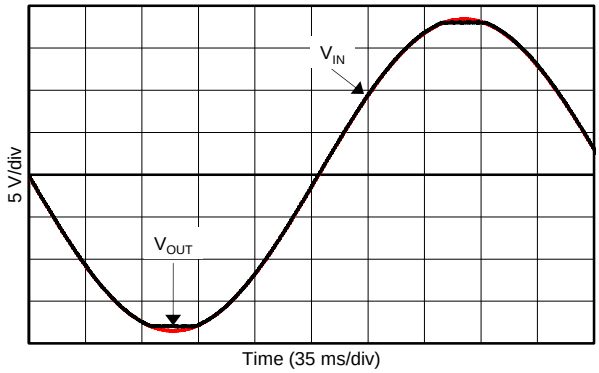

Figure 39. No Phase Reversal

7.3.4 Thermal Protection

The internal power dissipation of any amplifier causes the internal (junction) temperature to rise. This phenomenon is called *self heating*. The OPAx196 has a thermal protection feature that prevents damage from self heating.

This thermal protection works by monitoring the temperature of the output stage and turning off the op amp output drive for temperatures above approximately 180°C. Thermal protection forces the output to a high-impedance state. The OPAx196 is also designed with approximately 30°C of thermal hysteresis. Thermal hysteresis prevents the output stage from cycling in and out of the high-impedance state. The OPAx196 returns to normal operation when the output stage temperature falls below approximately 150°C.

The absolute maximum junction temperature of the OPAx196 is 150°C. Exceeding the limits shown in the *Absolute Maximum Ratings* table may cause damage to the device. Thermal protection triggers at 180°C because of unit-to-unit variance, but does not interfere with device operation up to the absolute maximum ratings. This thermal protection is not designed to prevent this device from exceeding absolute maximum ratings, but rather from excessive thermal overload.

Copyright © 2017, Texas Instruments Incorporated

7.3.5 Capacitive Load and Stability

The OPAx196 features a patented output stage capable of driving large capacitive loads, and in a unity-gain configuration, directly drives up to 1 nF of pure capacitive load. Increasing the gain enhances the ability of the amplifier to drive greater capacitive loads; see Figure 40. The particular op amp circuit configuration, layout, gain, and output loading are some of the factors to consider when establishing whether an amplifier will be stable in operation.

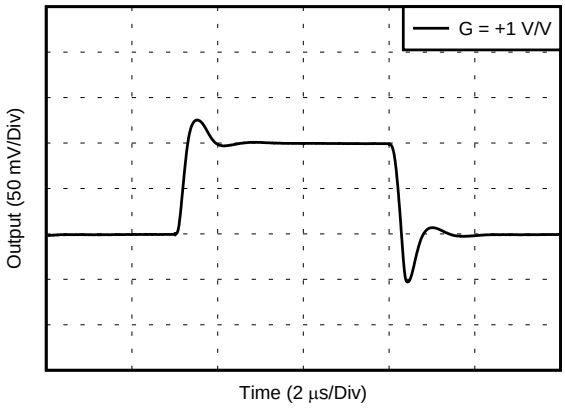

Figure 40. Transient Response with a Purely Capacitive Load of 1 nF

Like many low-power amplifiers, some ringing can occur even with capacitive loads less than 100 pF. In unity-gain configurations with no or very light dc loads, place an RC snubber circuit at the OPAx196 output to reduce any possibility of ringing in lightly-loaded applications. Figure 41 illustrates the recommended RC snubber circuit.

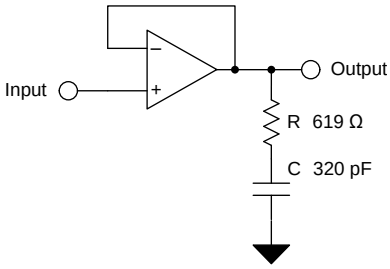

Figure 41. RC Snubber Circuit for Lightly-Loaded Applications in Unity Gain

Copyright © 2017, Texas Instruments Incorporated

For additional drive capability in unity-gain configurations, improve capacitive load drive by inserting a small, 10-Ω to 20-Ω resistor (R_{ISO}) in series with the output, as shown in Figure 42. This resistor significantly reduces ringing while maintaining dc performance for purely capacitive loads. However, if there is a resistive load in parallel with the capacitive load, a voltage divider is created, introducing a gain error at the output and slightly reducing the output swing. The error introduced is proportional to the ratio R_{ISO} / R_L and is generally negligible at low output levels. A high capacitive load drive makes the OPA196 well suited for applications such as reference buffers, MOSFET gate drives, and cable-shield drives. The circuit shown in Figure 42 uses R_{ISO} to stabilize the output of an op amp. R_{ISO} modifies the open-loop gain of the system for increased phase margin. Results using the OPA196 are summarized in Table 3. For additional information on techniques to optimize and design using this circuit, TI Precision Design TIDU032 details complete design goals, simulation, and test results.

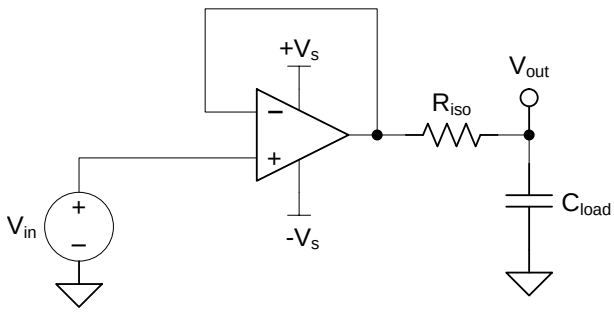

Figure 42. Extending Capacitive Load Drive With the OPA196

Table 3. OPA196 Capacitive Load Drive Solution Using Isolation Resistor Comparison of Calculated and Measured Results

PARAMETER	VALUE								
Capacitive Load	**100 pF**	**1000 pF**		**0.01 µF**		**0.1 µF**		**1 µF**	
Phase Margin	**45°**	**45°**	**60°**	**45°**	**60°**	**45°**	**60°**	**45°**	**60°**
R_{ISO} (Ω)	280	113	432	68	210	17.8	53.6	3.6	10
Measured Overshoot (%)	23	23	8	23	8	23	8	23	8

For step-by-step design procedure, circuit schematics, bill of materials, printed circuit board (PCB) files, simulation results, and test results, refer to TI Precision Design TIDU032, *Capacitive Load Drive Solution using an Isolation Resistor* .

7.3.6 Common-Mode Voltage Range

The OPAx196 is a 36-V, true rail-to-rail input operational amplifier with an input common-mode range that extends 100 mV beyond either supply rail. This wide range is achieved with paralleled complementary N-channel and P-channel differential input pairs, as shown in Figure 43. The N-channel pair is active for input voltages close to the positive rail, typically (V+) – 3 V to 100 mV above the positive supply. The P-channel pair is active for inputs from 100 mV below the negative supply to approximately (V+) – 1.5 V. There is a small transition region, typically (V+) –3 V to (V+) – 1.5 V in which both input pairs are active. This transition region varies modestly with process variation. Within this region PSRR, CMRR, offset voltage, offset drift, noise, and THD performance are degraded compared to operation outside this region.

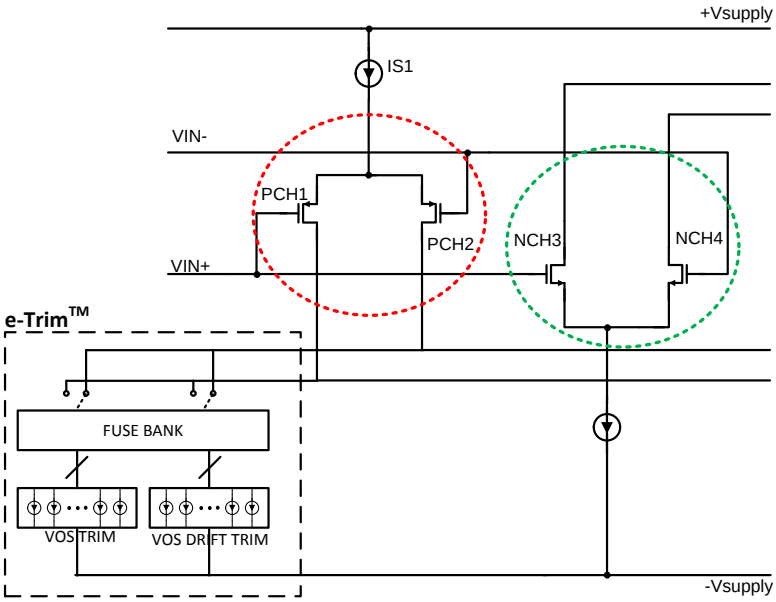

Figure 43. Rail-to-Rail Input Stage

To achieve the best performance for two-stage rail-to-rail input amplifiers, avoid the transition region when possible. The OPAx196 uses a precision trim for both the N-channel and P-channel regions. This technique enables significantly lower levels of offset than previous-generation devices, causing variance in the transition region of the input stages to appear exaggerated relative to offset over the full common-mode range, as shown in Figure 44.

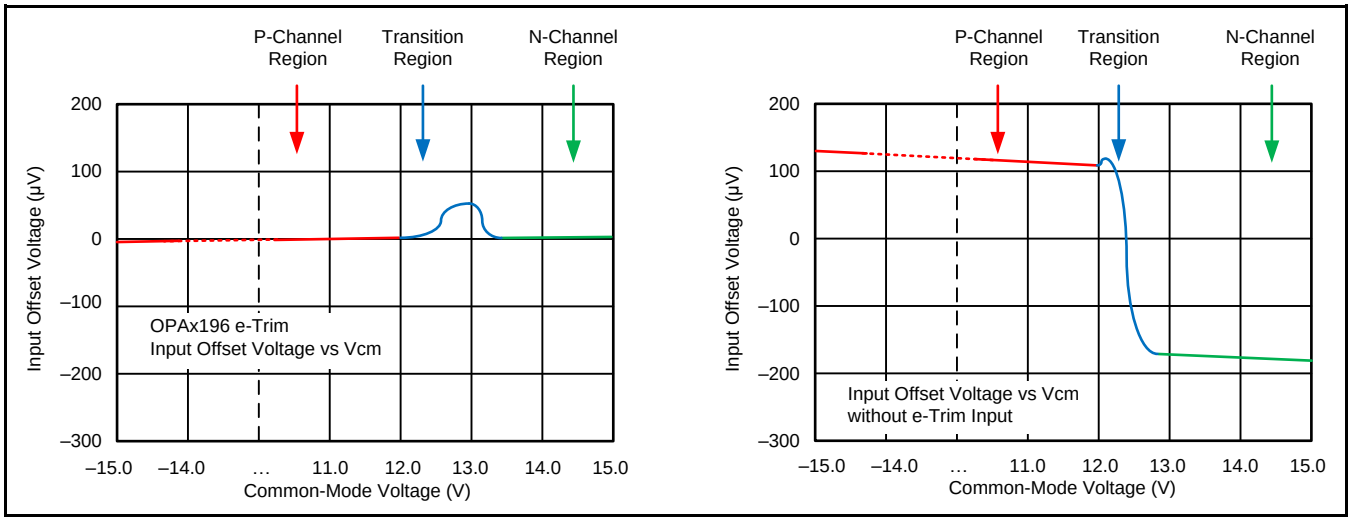

Figure 44. Common-Mode Transition vs Standard Rail-to-Rail Amplifiers

Copyright © 2017, Texas Instruments Incorporated

7.3.7 Electrical Overstress

Designers often ask questions about the capability of an operational amplifier to withstand electrical overstress (EOS). These questions tend to focus on the device inputs, but may involve the supply voltage pins or even the output pin. Each of these different pin functions have electrical stress limits determined by the voltage breakdown characteristics of the particular semiconductor fabrication process and specific circuits connected to the pin. Additionally, internal electrostatic discharge (ESD) protection is built into these circuits to protect them from accidental ESD events both before and during product assembly.

Having a good understanding of this basic ESD circuitry and its relevance to an electrical overstress event is helpful. See Figure 45 for an illustration of the ESD circuits contained in the OPAx196 (indicated by the dashed line area). The ESD protection circuitry involves several current-steering diodes connected from the input and output pins and routed back to the internal power-supply lines, where the diodes meet at an absorption device or the power-supply ESD cell, internal to the operational amplifier. This protection circuitry is intended to remain inactive during normal circuit operation.

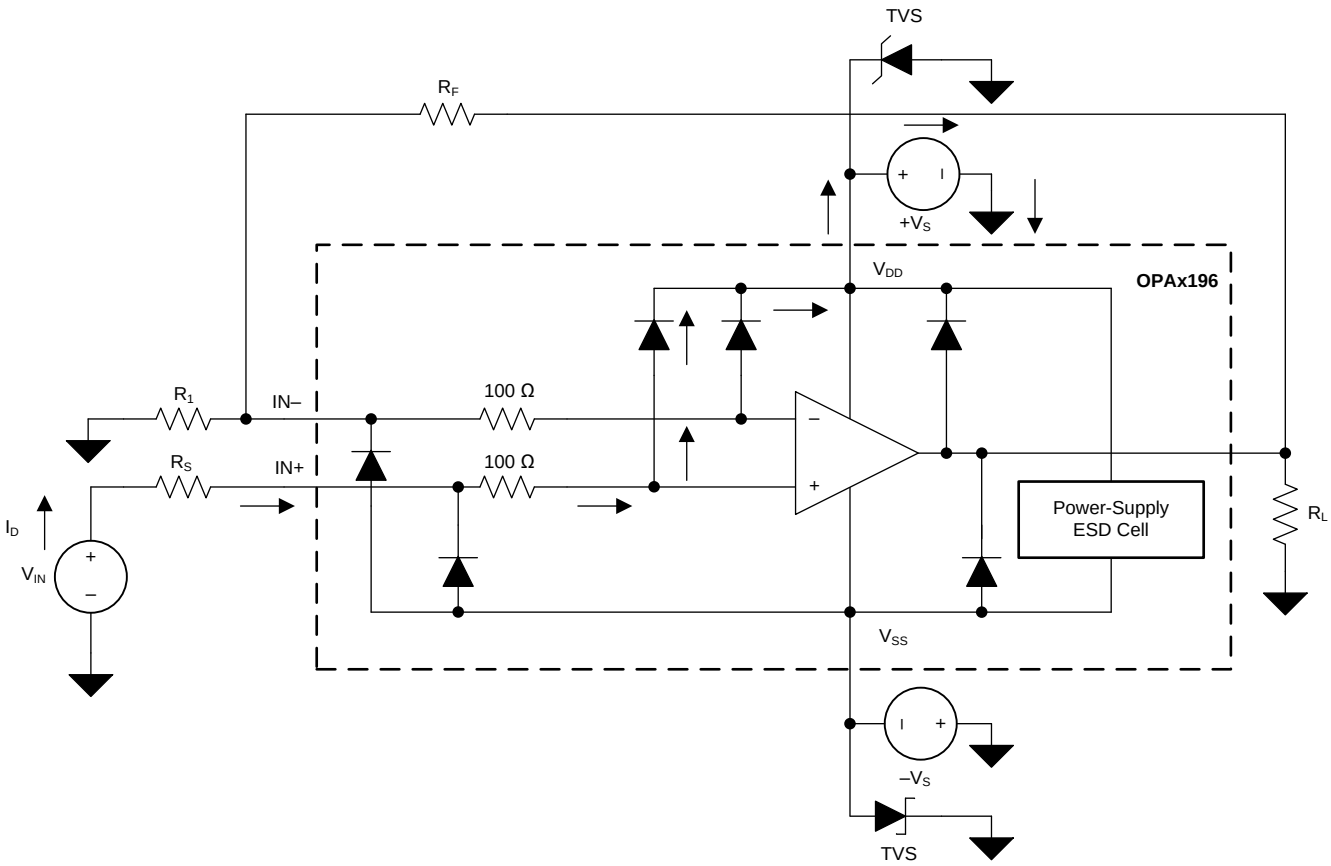

Figure 45. Equivalent Internal ESD Circuitry Relative to a Typical Circuit Application

An ESD event is very high voltage for a very short duration (for example, 1 kV for 100 ns); whereas, an EOS event is lower voltage for a longer duration (for example, 50 V for 100 ms). The ESD diodes are designed for out-of-circuit ESD protection (that is, during assembly, test, and storage of the device before being soldered to the PCB). During an ESD event, the ESD signal is passed through the ESD steering diodes to an absorption circuit labeled ESD power-supply circuit. The ESD absorption circuit clamps the supplies to a safe level.

Although this behavior is necessary for out-of-circuit protection, excessive current and damage is caused if activated in-circuit. A transient voltage suppressor (TVS) can be used to prevent against damage caused by turning on the ESD absorption circuit during an in-circuit ESD event. Using the appropriate current limiting resistors and TVS diodes allows for the use of device ESD diodes to protect against EOS events.

7.3.8 Overload Recovery

Overload recovery is defined as the time required for the op amp output to recover from a saturated state to a linear state. The output devices of the op amp enter a saturation region when the output voltage exceeds the rated operating voltage, either due to the high input voltage or the high gain. After the device enters the saturation region, the charge carriers in the output devices require time to return back to the linear state. After the charge carriers return back to the linear state, the device begins to slew at the specified slew rate. Thus, the propagation delay in case of an overload condition is the sum of the overload recovery time and the slew time.

7.4 Device Functional Modes

The OPAx196 has a single functional mode and is operational when the power-supply voltage is greater than 4.5 V (±2.25 V). The maximum power supply voltage for the OPAx196 is 36 V (±18 V).

Copyright © 2017, Texas Instruments Incorporated

8 Application and Implementation

NOTE

Information in the following applications sections is not part of the TI component specification, and TI does not warrant its accuracy or completeness. TI's customers are responsible for determining suitability of components for their purposes. Customers should validate and test their design implementation to confirm system functionality.

8.1 Application Information

The OPAx196 family offers outstanding dc precision and ac performance. These devices operate up to 36-V supply rails and offer true rail-to-rail input/output, ultralow offset voltage and offset voltage drift, as well as 2-MHz bandwidth and high capacitive load drive. These features make the OPAx196 a robust, high-performance operational amplifier for high-voltage industrial applications.

8.2 Typical Applications

8.2.1 Low-side Current Measurement

Figure 46 shows the OPA196 configured in a low-side current sensing application. For a full analysis of the circuit shown in Figure 46 including theory, calculations, simulations, and measured data see the 0-1A, single-supply, low-side, current sensing solution, see TIPD129.

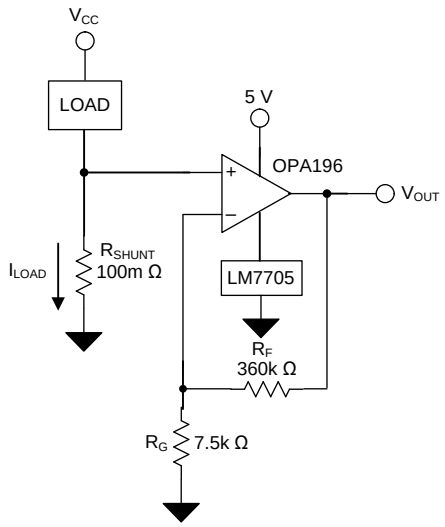

Figure 46. OPA196 in a Low-Side, Current-Sensing Application

8.2.1.1 Design Requirements

The design requirements for this design are:

- Load current: 0 A to 1 A
- Output voltage: 4.9 V
- Maximum shunt voltage: 100 mV

Copyright © 2017, Texas Instruments Incorporated

Typical Applications (continued)

8.2.1.2 Detailed Design Procedure

The transfer function of the circuit in Figure 46 is given in Equation 1:

$$V_{OUT} = I_{LOAD} \times R_{SHUNT} \times Gain \tag{1}$$

The load current (I_{LOAD}) produces a voltage drop across the shunt resistor (R_{SHUNT}). The load current is set from 0 A to 1 A. To keep the shunt voltage below 100 mV at maximum load current, the largest shunt resistor is defined using Equation 2.

$$R_{SHUNT} = \frac{V_{SHUNT_MAX}}{I_{LOAD_MAX}} = \frac{100mV}{1A} = 100m\Omega \tag{2}$$

Using Equation 2, R_{SHUNT} is calculated to be 100 mΩ. The voltage drop produced by I_{LOAD} and R_{SHUNT} is amplified by the OPA196 to produce an output voltage of 0 V to 4.9 V. The gain needed by the OPA196 to produce the necessary output voltage is calculated using Equation 3:

$$Gain = \frac{\left(V_{OUT_MAX} - V_{OUT_MIN}\right)}{\left(V_{IN_MAX} - V_{IN_MIN}\right)} \tag{3}$$

Using Equation 3, the required gain is calculated to be 49 V/V, which is set with resistors R_F and R_G. Equation 4 is used to size the resistors, R_F and R_G, to set the gain of the OPA196 to 49 V/V.

$$Gain = 1 + \frac{\left(R_F\right)}{\left(R_G\right)} \tag{4}$$

Choosing R_F as 360 kΩ, R_G is calculated to be 7.5 kΩ. R_F and R_G were chosen as 360 kΩ and 7.5 kΩ because they are standard value resistors that create a 49:1 ratio. Other resistors that create a 49:1 ratio can also be used. Figure 2 shows the measured transfer function of the circuit shown in Figure 46.

8.2.1.3 Application Curves

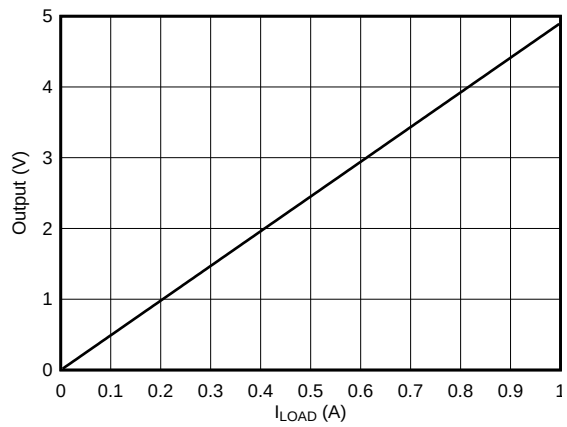

Figure 47. Low-Side, Current-Sense, Transfer Function

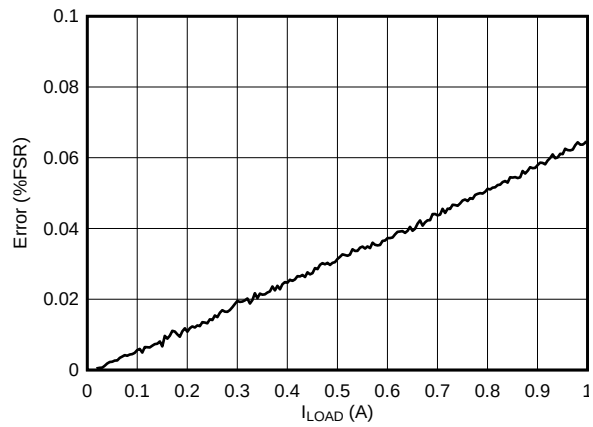

Figure 48. Low-Side, Current-Sense, Full-Scale Error

Copyright © 2017, Texas Instruments Incorporated

Typical Applications (continued)

8.2.2 16-Bit Precision Multiplexed Data-Acquisition System

Figure 49 shows a 16-bit, differential, 4-channel, multiplexed, data-acquisition system. This example is typical in industrial applications that require low distortion and a high-voltage differential input. The circuit uses the ADS8864, a 16-bit, 400-kSPS successive-approximation-resistor (SAR), analog-to-digital converter (ADC), along with a precision, high-voltage, signal-conditioning front-end, and a 4-channel differential multiplexer (mux). This application example shows the process for optimizing the precision, high-voltage, front-end drive circuit using the OPA196 and OPA140 to achieve excellent dynamic performance and linearity with the ADS8864. The full TI Precision Design can be found in TIDU181.

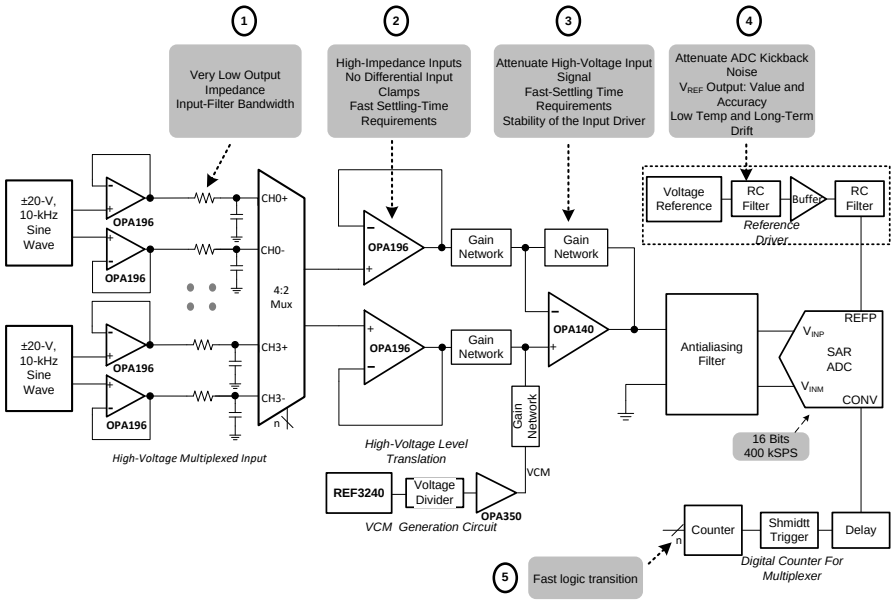

Figure 49. OPA196 in 16-Bit, 400-kSPS, 4-Channel, Multiplexed Data Acquisition System for High-Voltage Inputs With Lowest Distortion

8.2.2.1 Design Requirements

The primary objective is to design a ±20-V, differential, 4-channel, multiplexed, data acquisition system with lowest distortion using the 16-bit ADS8864 at a throughput of 400 kSPS for a 10-kHz, full-scale, pure sine-wave input. The design requirements for this block design are:

- System supply voltage: ±15 V
- ADC supply voltage: 3.3 V
- ADC sampling rate: 400 kSPS
- ADC reference voltage (REFP): 4.096 V
- System input signal: A high-voltage differential input signal with a peak amplitude of 10 V and frequency (f_{IN}) of 10 kHz are applied to each differential input of the mux.

8.2.2.2 Detailed Design Procedure

The purpose of this application example is to design an optimal, high-voltage, multiplexed, data-acquisition system for highest system linearity and fast settling. The overall system block diagram is shown in Figure 49. The circuit is a multichannel, data-acquisition, signal chain consisting of an input low-pass filter, multiplexer (mux), mux output buffer, attenuating SAR ADC driver, digital counter for the mux, and the reference driver. The architecture allows fast sampling of multiple channels using a single ADC, providing a low-cost solution. The two primary design considerations to maximize the performance of a precision, multiplexed, data-acquisition system are the mux input analog front-end and the high-voltage, level translation, SAR ADC driver design. However, carefully design each analog circuit block based on the ADC performance specifications in order to achieve the fastest settling at 16-bit resolution and lowest distortion system. Figure 49 includes the most important specifications for each individual analog block.

Copyright © 2017, Texas Instruments Incorporated

Typical Applications (continued)

This design systematically approaches each analog circuit block to achieve a 16-bit settling for a full-scale input stage voltage and linearity for a 10-kHz sinusoidal input signal at each input channel. The first step in the design is to understand the requirement for an extremely-low-impedance input-filter design for the mux. This understanding helps in the decision of an appropriate input filter and selection of a mux to meet the system settling requirements. The next important step is the design of the attenuating analog front-end (AFE) used to level translate the high-voltage input signal to a low-voltage ADC input while maintaining the amplifier stability. Then, the next step is to design a digital interface to switch the mux input channels with minimum delay. The final design challenge is to design a high-precision, reference-driver circuit that provides the required REFP reference voltage with low offset, drift, and noise contributions.

For step-by-step design procedure, circuit schematics, bill of materials, PCB files, simulation results, and test results, refer to TI Precision Design TIDU181, *16-bit, 400-kSPS, 4-Channel, Multiplexed Data Acquisition System for High Voltage Inputs with Lowest Distortion*.

8.2.3 Slew Rate Limit for Input Protection

In control systems for valves or motors, abrupt changes in voltages or currents can cause mechanical damages. By controlling the slew rate of the command voltages into the drive circuits, the load voltages ramps up and down at a safe rate. For symmetrical slew-rate applications (positive slew rate equals negative slew rate), one additional op amp provides slew-rate control for a given analog gain stage. The unique input protection and high output current and slew rate of the OPAx196 make the device an optimal amplifier to achieve slew rate control for both dual- and single-supply systems.Figure 50 shows the OPA196 in a slew-rate limit design.

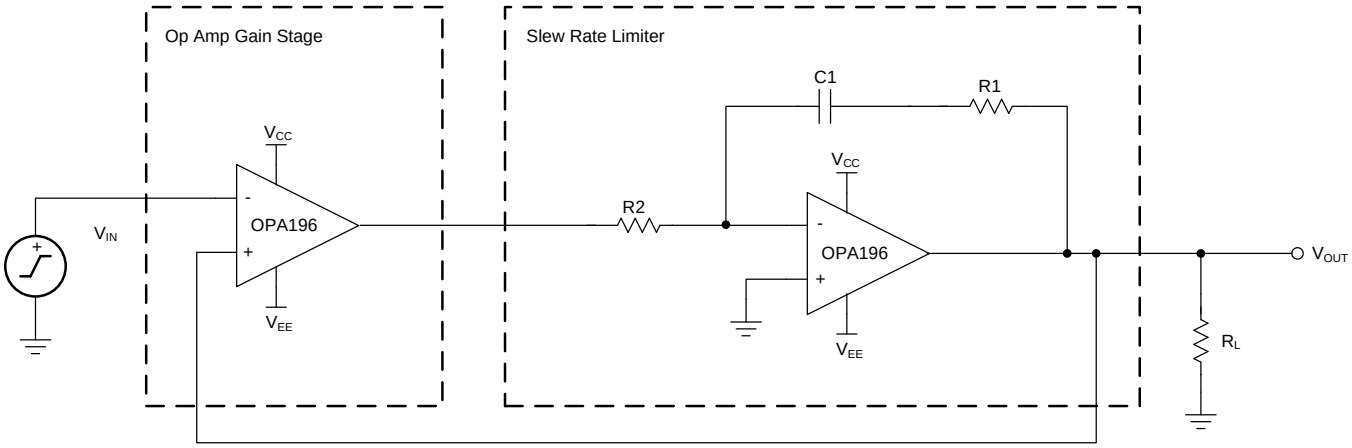

Figure 50. Slew Rate Limiter Uses One Op Amp

For step-by-step design procedure, circuit schematics, bill of materials, PCB files, simulation results, and test results, refer to TI Precision Design TIDU026, *Slew Rate Limiter Uses One Op Amp*.

Copyright © 2017, Texas Instruments Incorporated

9 Power-Supply Recommendations

The OPAx196 is specified for operation from 4.5 V to 36 V (±2.25 V to ±18 V); many specifications apply from –40°C to +125°C. Parameters that can exhibit significant variance with regard to operating voltage or temperature are presented in the *Typical Characteristics*.

CAUTION

Supply voltages larger than 40 V can permanently damage the device; see the *Absolute Maximum Ratings*.

Place 0.1-µF bypass capacitors close to the power-supply pins to reduce errors coupling in from noisy or high-impedance power supplies. For more detailed information on bypass capacitor placement, refer to the *Layout* section.

10 Layout

10.1 Layout Guidelines

For best operational performance of the device, use good PCB layout practices, including:

- Connect low-ESR, 0.1-µF ceramic bypass capacitors between each supply pin and ground, placed as close as possible to the device. A single bypass capacitor from V+ to ground is applicable for single-supply applications.
  - Noise can propagate into analog circuitry through the power pins of the circuit as a whole and op amp itself. Bypass capacitors are used to reduce the coupled noise by providing low-impedance power sources local to the analog circuitry.
- Make sure to physically separate digital and analog grounds paying attention to the flow of the ground current. Separate grounding for analog and digital portions of circuitry is one of the simplest and most-effective methods of noise suppression. One or more layers on multilayer PCBs are usually devoted to ground planes. A ground plane helps distribute heat and reduces EMI noise pickup.
- In order to reduce parasitic coupling, run the input traces as far away as possible from the supply or output traces. If these traces cannot be kept separate, crossing the sensitive trace perpendicular is much better as opposed to in parallel with the noisy trace.
- Place the external components as close to the device as possible. As shown in Figure 52, keeping RF and RG close to the inverting input minimizes parasitic capacitance.
- Keep the length of input traces as short as possible. Always remember that the input traces are the most sensitive part of the circuit.
- Consider a driven, low-impedance guard ring around the critical traces. A guard ring can significantly reduce leakage currents from nearby traces that are at different potentials.
- Clean the PCB following board assembly for best performance.
- Any precision integrated circuit may experience performance shifts due to moisture ingress into the plastic package. After any aqueous PCB cleaning process, bake the PCB assembly to remove moisture introduced into the device packaging during the cleaning process. A low-temperature, post-cleaning bake at 85°C for 30 minutes is sufficient for most circumstances.

Copyright © 2017, Texas Instruments Incorporated

10.2 Layout Example

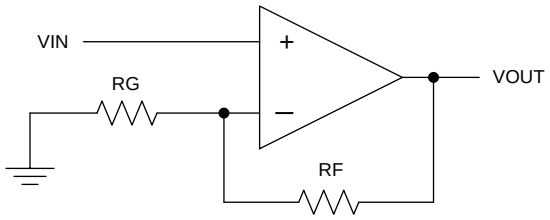

Figure 51. Schematic Representation

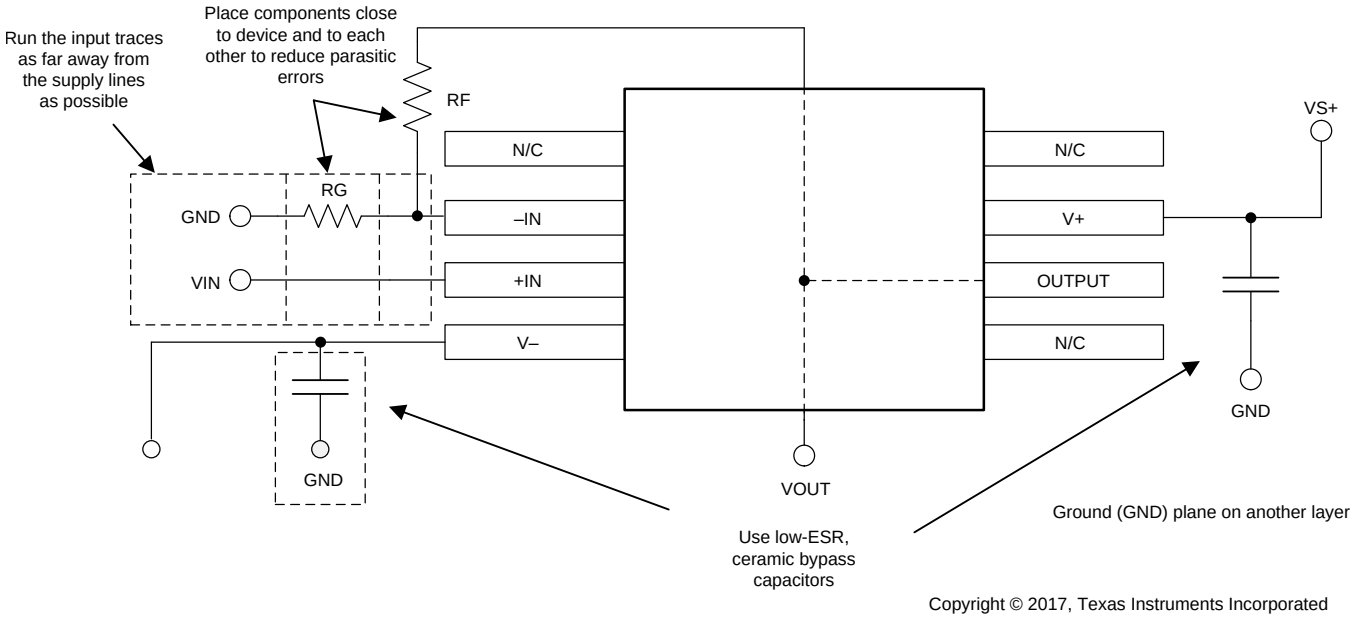

Figure 52. Operational Amplifier Board Layout for Non-inverting Configuration

版权 © 2017, Texas Instruments Incorporated

11 器件和文档支持

11.1 器件支持

11.1.1 开发支持

11.1.1.1 TINA-TI™（免费软件下载）

TINA™是一款简单、功能强大且易于使用的电路仿真程序，此程序基于 SPICE 引擎。TINA-TI 是 TINA 软件的一款免费全功能版本，除了一系列无源和有源模型外，此版本软件还预先载入了一个宏模型库。TINA-TI 提供所有传统的 SPICE 直流、瞬态和频域分析，以及其他设计功能。

TINA-TI 可从 Analog eLab Design Center（模拟电子实验室设计中心）免费下载，它提供全面的后续处理能力，使得用户能够以多种方式形成结果。虚拟仪器提供选择输入波形和探测电路节点、电压以及波形的功能，从而构建一个动态的快速入门工具。

注

这些文件需要安装 TINA 软件（由 DesignSoft™提供）或者 TINA-TI 软件。请从 TINA-TI 文件夹中下载免费的 TINA-TI 软件（网址为 http://www.ti.com.cn/tool/cn/tina-ti）。

11.1.1.2 TI 高精度设计

TI 高精度设计（请访问 http://www.ti.com.cn/ww/analog/precision-designs/ 获取）是由 TI 公司高精度模拟 应用 专家创建的模拟解决方案，提供了许多实用电路的工作原理、组件选择、仿真、完整印刷电路板 (PCB) 电路原理图和布局布线、物料清单以及性能测量结果。

11.2 文档支持

11.2.1 相关文档

- *《运算放大器的电磁干扰 (EMI) 抑制比》*
- *0-1A 单电源低侧电流传感解决方案*
- *《适合所有人的运算放大器》*

11.3 相关链接

表 4 列出了快速访问链接。类别包括技术文档、支持和社区资源、工具和软件，以及立即购买的快速链接。

表 4. 相关链接

器件	产品文件夹	立即订购	技术文档	工具和软件	支持和社区
OPA196	请单击此处	请单击此处	请单击此处	请单击此处	请单击此处
OPA2196	请单击此处	请单击此处	请单击此处	请单击此处	请单击此处
OPA4196	请单击此处	请单击此处	请单击此处	请单击此处	请单击此处

11.4 接收文档更新通知

要接收文档更新通知，请导航至 TI.com 上的器件产品文件夹。请单击右上角的*通知我* 进行注册，即可收到任意产品信息更改每周摘要。有关更改的详细信息，请查看任意已修订文档中包含的修订历史记录。

11.5 社区资源

下列链接提供到 TI 社区资源的连接。链接的内容由各个分销商“按照原样”提供。这些内容并不构成 TI 技术规范，并且不一定反映 TI 的观点；请参阅 TI 的 《使用条款》。

TI E2E™ 在线社区 ***TI 的工程师对工程师 (E2E) 社区。***此社区的创建目的在于促进工程师之间的协作。在 e2e.ti.com 中，您可以咨询问题、分享知识、拓展思路并与同行工程师一道帮助解决问题。

设计支持 ***TI 参考设计支持*** 可帮助您快速查找有帮助的 E2E 论坛、设计支持工具以及技术支持的联系信息。

11.6 商标

e-trim, E2E are trademarks of Texas Instruments.
TINA-TI is a trademark of Texas Instruments, Inc and DesignSoft, Inc.
Bluetooth is a registered trademark of Bluetooth SIG, Inc.
TINA, DesignSoft are trademarks of DesignSoft, Inc.

11.7 静电放电警告

ESD 可能会损坏该集成电路。德州仪器 (TI) 建议通过适当的预防措施处理所有集成电路。如果不遵守正确的处理措施和安装程序，可能会损坏集成电路。

ESD 的损坏小至导致微小的性能降级，大至整个器件故障。 精密的集成电路可能更容易受到损坏，这是因为非常细微的参数更改都可能会导致器件与其发布的规格不相符。

11.8 Glossary

SLYZ022 — *TI Glossary*.

This glossary lists and explains terms, acronyms, and definitions.

12 机械、封装和可订购信息

以下页面包括机械、封装和可订购信息。这些信息是指定器件的最新可用数据。这些数据发生变化时，我们可能不会另行通知或修订此文档。如欲获取此产品说明书的浏览器版本，请参见左侧的导航栏。

版权 © 2017, Texas Instruments Incorporated

PACKAGING INFORMATION

Orderable part number	Status (1)	Material type (2)	Package | Pins	Package qty | Carrier	RoHS (3)	Lead finish/ Ball material (4)	MSL rating/ Peak reflow (5)	Op temp (°C)	Part marking (6)
OPA196ID	Active	Production	SOIC (D) | 8	75 | TUBE	Yes	NIPDAU	Level-2-260C-1 YEAR	-40 to 125	OPA196
OPA196ID.B	Active	Production	SOIC (D) | 8	75 | TUBE	Yes	NIPDAU	Level-2-260C-1 YEAR	-40 to 125	OPA196
OPA196IDBVR	Active	Production	SOT-23 (DBV) | 5	3000 | LARGE T&R	Yes	NIPDAU	Level-2-260C-1 YEAR	-40 to 125	O196
OPA196IDBVR.B	Active	Production	SOT-23 (DBV) | 5	3000 | LARGE T&R	Yes	NIPDAU	Level-2-260C-1 YEAR	-40 to 125	O196
OPA196IDBVRG4	Active	Production	SOT-23 (DBV) | 5	3000 | LARGE T&R	Yes	NIPDAU	Level-2-260C-1 YEAR	-40 to 125	O196
OPA196IDBVRG4.B	Active	Production	SOT-23 (DBV) | 5	3000 | LARGE T&R	Yes	NIPDAU	Level-2-260C-1 YEAR	-40 to 125	O196
OPA196IDBVT	Active	Production	SOT-23 (DBV) | 5	250 | SMALL T&R	Yes	NIPDAU	Level-2-260C-1 YEAR	-40 to 125	O196
OPA196IDBVT.B	Active	Production	SOT-23 (DBV) | 5	250 | SMALL T&R	Yes	NIPDAU	Level-2-260C-1 YEAR	-40 to 125	O196
OPA196IDGKR	Active	Production	VSSOP (DGK) | 8	2500 | LARGE T&R	Yes	NIPDAU	Level-2-260C-1 YEAR	-40 to 125	O196
OPA196IDGKR.B	Active	Production	VSSOP (DGK) | 8	2500 | LARGE T&R	Yes	NIPDAU	Level-2-260C-1 YEAR	-40 to 125	O196
OPA196IDGKT	Active	Production	VSSOP (DGK) | 8	250 | SMALL T&R	Yes	NIPDAU	Level-2-260C-1 YEAR	-40 to 125	O196
OPA196IDGKT.B	Active	Production	VSSOP (DGK) | 8	250 | SMALL T&R	Yes	NIPDAU	Level-2-260C-1 YEAR	-40 to 125	O196
OPA196IDR	Active	Production	SOIC (D) | 8	2500 | LARGE T&R	Yes	NIPDAU	Level-2-260C-1 YEAR	-40 to 125	OPA196
OPA196IDR.B	Active	Production	SOIC (D) | 8	2500 | LARGE T&R	Yes	NIPDAU	Level-2-260C-1 YEAR	-40 to 125	OPA196
OPA196IDRG4	Active	Production	SOIC (D) | 8	2500 | LARGE T&R	Yes	NIPDAU	Level-2-260C-1 YEAR	-40 to 125	OPA196
OPA196IDRG4.B	Active	Production	SOIC (D) | 8	2500 | LARGE T&R	Yes	NIPDAU	Level-2-260C-1 YEAR	-40 to 125	OPA196
OPA2196ID	Active	Production	SOIC (D) | 8	75 | TUBE	Yes	NIPDAU	Level-2-260C-1 YEAR	-40 to 125	OP2196
OPA2196ID.B	Active	Production	SOIC (D) | 8	75 | TUBE	Yes	NIPDAU	Level-2-260C-1 YEAR	-40 to 125	OP2196
OPA2196IDG4	Active	Production	SOIC (D) | 8	75 | TUBE	Yes	NIPDAU	Level-2-260C-1 YEAR	-40 to 125	OP2196
OPA2196IDG4.B	Active	Production	SOIC (D) | 8	75 | TUBE	Yes	NIPDAU	Level-2-260C-1 YEAR	-40 to 125	OP2196
OPA2196IDGKR	Active	Production	VSSOP (DGK) | 8	2500 | LARGE T&R	Yes	Call TI | Nipdau	Level-2-260C-1 YEAR	-40 to 125	2196
OPA2196IDGKR.B	Active	Production	VSSOP (DGK) | 8	2500 | LARGE T&R	Yes	Call TI	Level-2-260C-1 YEAR	-40 to 125	2196
OPA2196IDGKRG4	Active	Production	VSSOP (DGK) | 8	2500 | LARGE T&R	Yes	NIPDAU	Level-2-260C-1 YEAR	-40 to 125	2196
OPA2196IDGKRG4.B	Active	Production	VSSOP (DGK) | 8	2500 | LARGE T&R	Yes	NIPDAU	Level-2-260C-1 YEAR	-40 to 125	2196
OPA2196IDGKT	Active	Production	VSSOP (DGK) | 8	250 | SMALL T&R	Yes	Call TI | Nipdau	Level-2-260C-1 YEAR	-40 to 125	2196
OPA2196IDGKT.B	Active	Production	VSSOP (DGK) | 8	250 | SMALL T&R	Yes	Call TI	Level-2-260C-1 YEAR	-40 to 125	2196
OPA2196IDR	Active	Production	SOIC (D) | 8	2500 | LARGE T&R	Yes	NIPDAU	Level-2-260C-1 YEAR	-40 to 125	OP2196
OPA2196IDR.B	Active	Production	SOIC (D) | 8	2500 | LARGE T&R	Yes	NIPDAU	Level-2-260C-1 YEAR	-40 to 125	OP2196
OPA4196ID	Active	Production	SOIC (D) | 14	50 | TUBE	Yes	NIPDAU	Level-3-260C-168 HR	-40 to 125	OPA4196

Orderable part number	Status (1)	Material type (2)	Package | Pins	Package qty | Carrier	RoHS (3)	Lead finish/ Ball material (4)	MSL rating/ Peak reflow (5)	Op temp (°C)	Part marking (6)
OPA4196ID.B	Active	Production	SOIC (D) | 14	50 | TUBE	Yes	NIPDAU	Level-3-260C-168 HR	-40 to 125	OPA4196
OPA4196IDR	Active	Production	SOIC (D) | 14	2500 | LARGE T&R	Yes	NIPDAU	Level-3-260C-168 HR	-40 to 125	OPA4196
OPA4196IDR.B	Active	Production	SOIC (D) | 14	2500 | LARGE T&R	Yes	NIPDAU	Level-3-260C-168 HR	-40 to 125	OPA4196
OPA4196IDRG4	Active	Production	SOIC (D) | 14	2500 | LARGE T&R	Yes	NIPDAU	Level-3-260C-168 HR	-40 to 125	OPA4196
OPA4196IDRG4.B	Active	Production	SOIC (D) | 14	2500 | LARGE T&R	Yes	NIPDAU	Level-3-260C-168 HR	-40 to 125	OPA4196

(1) **Status:** For more details on status, see our product life cycle.

(2) **Material type:** When designated, preproduction parts are prototypes/experimental devices, and are not yet approved or released for full production. Testing and final process, including without limitation quality assurance, reliability performance testing, and/or process qualification, may not yet be complete, and this item is subject to further changes or possible discontinuation. If available for ordering, purchases will be subject to an additional waiver at checkout, and are intended for early internal evaluation purposes only. These items are sold without warranties of any kind.

(3) **RoHS values:** Yes, No, RoHS Exempt. See the TI RoHS Statement for additional information and value definition.

(4) **Lead finish/Ball material:** Parts may have multiple material finish options. Finish options are separated by a vertical ruled line. Lead finish/Ball material values may wrap to two lines if the finish value exceeds the maximum column width.

(5) **MSL rating/Peak reflow:** The moisture sensitivity level ratings and peak solder (reflow) temperatures. In the event that a part has multiple moisture sensitivity ratings, only the lowest level per JEDEC standards is shown. Refer to the shipping label for the actual reflow temperature that will be used to mount the part to the printed circuit board.

(6) **Part marking:** There may be an additional marking, which relates to the logo, the lot trace code information, or the environmental category of the part.

Multiple part markings will be inside parentheses. Only one part marking contained in parentheses and separated by a "~" will appear on a part. If a line is indented then it is a continuation of the previous line and the two combined represent the entire part marking for that device.

Important Information and Disclaimer: The information provided on this page represents TI's knowledge and belief as of the date that it is provided. TI bases its knowledge and belief on information provided by third parties, and makes no representation or warranty as to the accuracy of such information. Efforts are underway to better integrate information from third parties. TI has taken and continues to take reasonable steps to provide representative and accurate information but may not have conducted destructive testing or chemical analysis on incoming materials and chemicals. TI and TI suppliers consider certain information to be proprietary, and thus CAS numbers and other limited information may not be available for release.

In no event shall TI's liability arising out of such information exceed the total purchase price of the TI part(s) at issue in this document sold by TI to Customer on an annual basis.

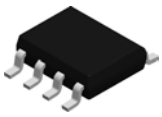

PACKAGE OUTLINE

D0008A

SOIC - 1.75 mm max height

SMALL OUTLINE INTEGRATED CIRCUIT

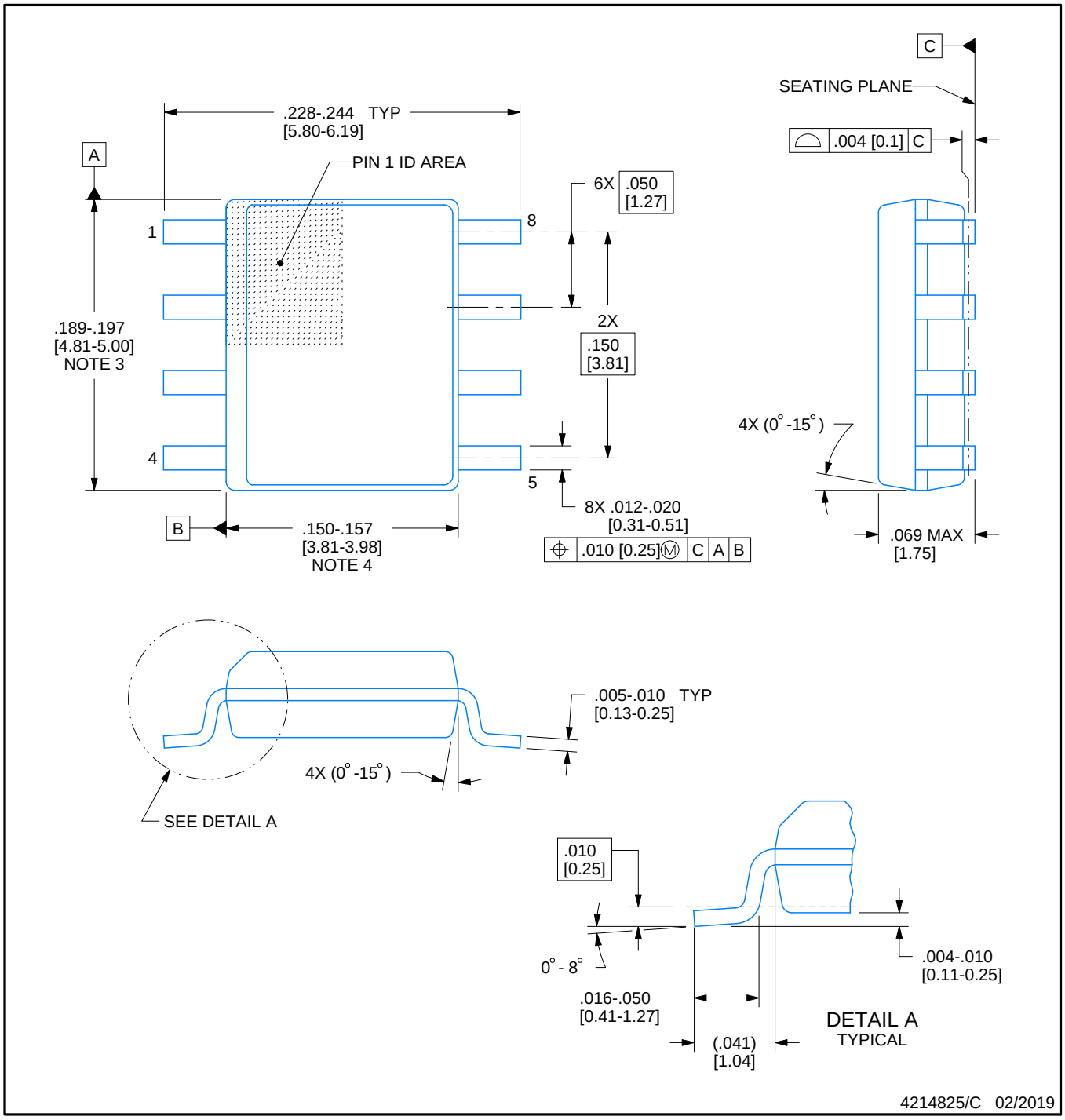

NOTES:

1. Linear dimensions are in inches [millimeters]. Dimensions in parenthesis are for reference only. Controlling dimensions are in inches. Dimensioning and tolerancing per ASME Y14.5M.
2. This drawing is subject to change without notice.
3. This dimension does not include mold flash, protrusions, or gate burrs. Mold flash, protrusions, or gate burrs shall not exceed .006 [0.15] per side.
4. This dimension does not include interlead flash.
5. Reference JEDEC registration MS-012, variation AA.

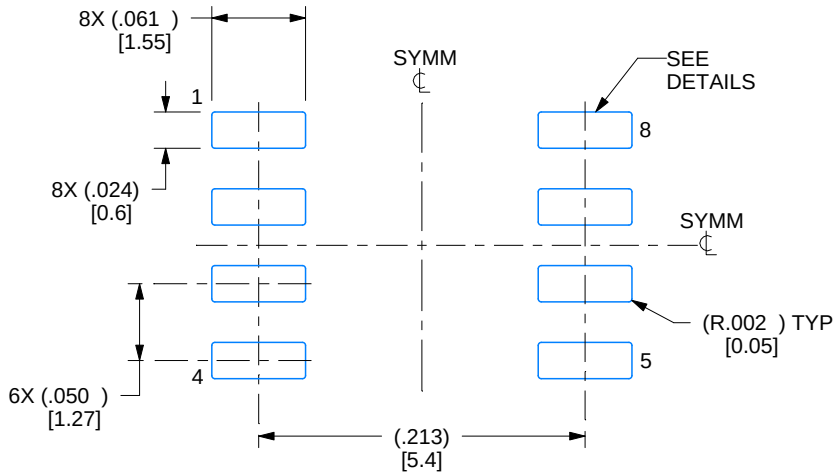

LAND PATTERN EXAMPLE
EXPOSED METAL SHOWN
SCALE:8X

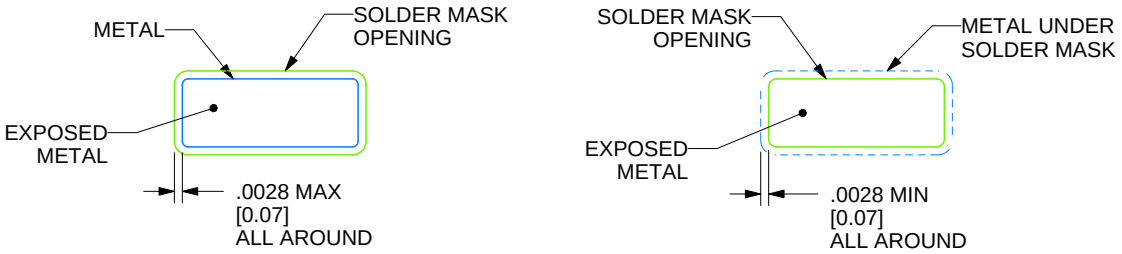

SOLDER MASK DETAILS

4214825/C 02/2019

NOTES: (continued)

6. Publication IPC-7351 may have alternate designs.
7. Solder mask tolerances between and around signal pads can vary based on board fabrication site.

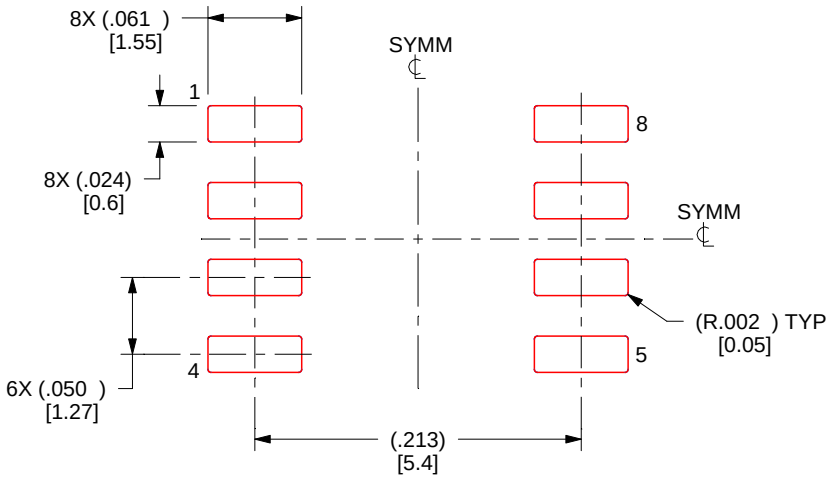

SOLDER PASTE EXAMPLE
BASED ON .005 INCH [0.125 MM] THICK STENCIL
SCALE:8X

4214825/C 02/2019

NOTES: (continued)

8. Laser cutting apertures with trapezoidal walls and rounded corners may offer better paste release. IPC-7525 may have alternate design recommendations.
9. Board assembly site may have different recommendations for stencil design.

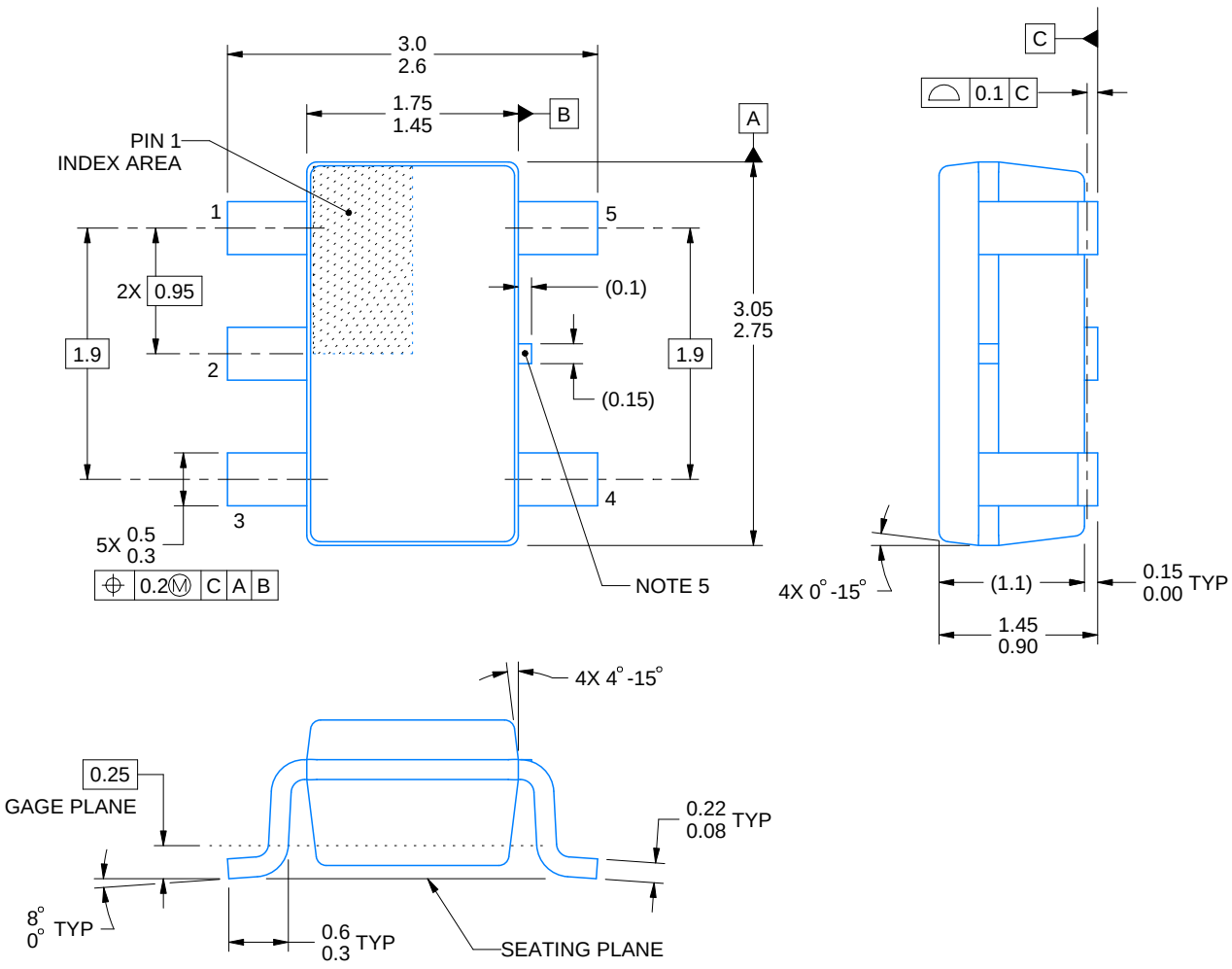

4214839/K 08/2024

NOTES:

1. All linear dimensions are in millimeters. Any dimensions in parenthesis are for reference only. Dimensioning and tolerancing per ASME Y14.5M.
2. This drawing is subject to change without notice.
3. Refernce JEDEC MO-178.
4. Body dimensions do not include mold flash, protrusions, or gate burrs. Mold flash, protrusions, or gate burrs shall not exceed 0.25 mm per side.
5. Support pin may differ or may not be present.

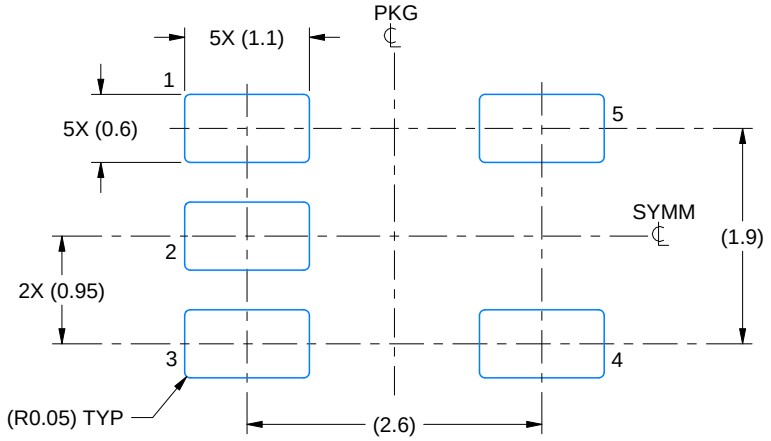

LAND PATTERN EXAMPLE
EXPOSED METAL SHOWN
SCALE:15X

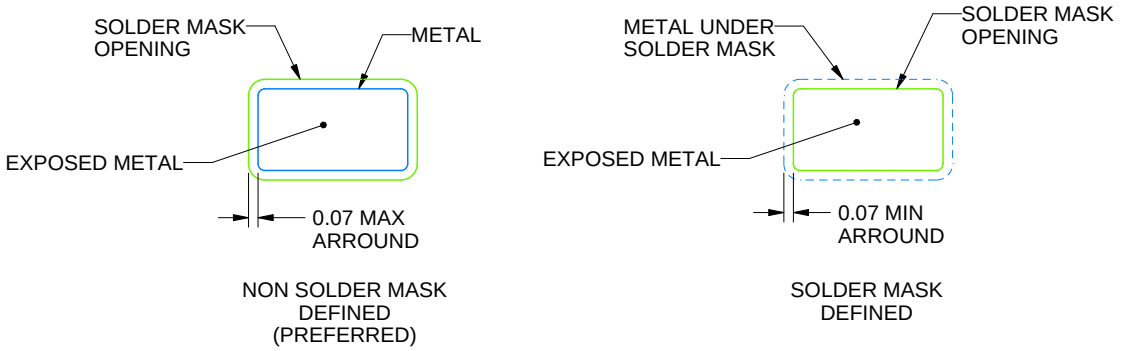

SOLDER MASK DETAILS

4214839/K 08/2024

NOTES: (continued)

6. Publication IPC-7351 may have alternate designs.
7. Solder mask tolerances between and around signal pads can vary based on board fabrication site.

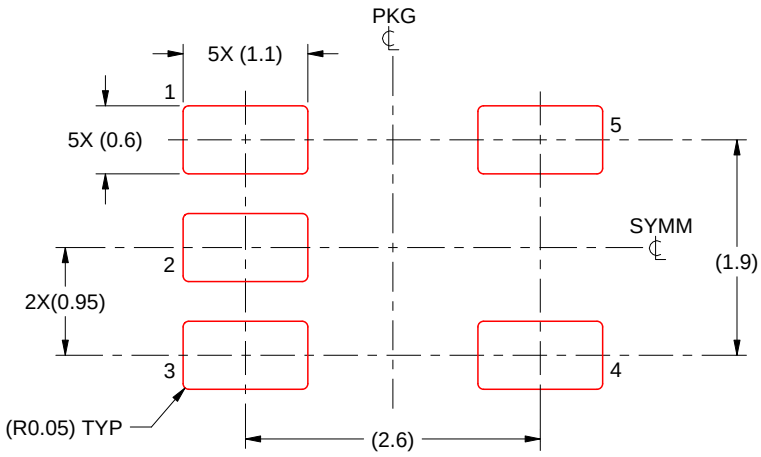

SOLDER PASTE EXAMPLE
BASED ON 0.125 mm THICK STENCIL
SCALE:15X

4214839/K 08/2024

NOTES: (continued)

8. Laser cutting apertures with trapezoidal walls and rounded corners may offer better paste release. IPC-7525 may have alternate design recommendations.
9. Board assembly site may have different recommendations for stencil design.

PACKAGE OUTLINE

DGK0008A

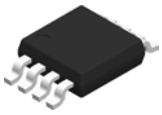

VSSOP - 1.1 mm max height

SMALL OUTLINE PACKAGE

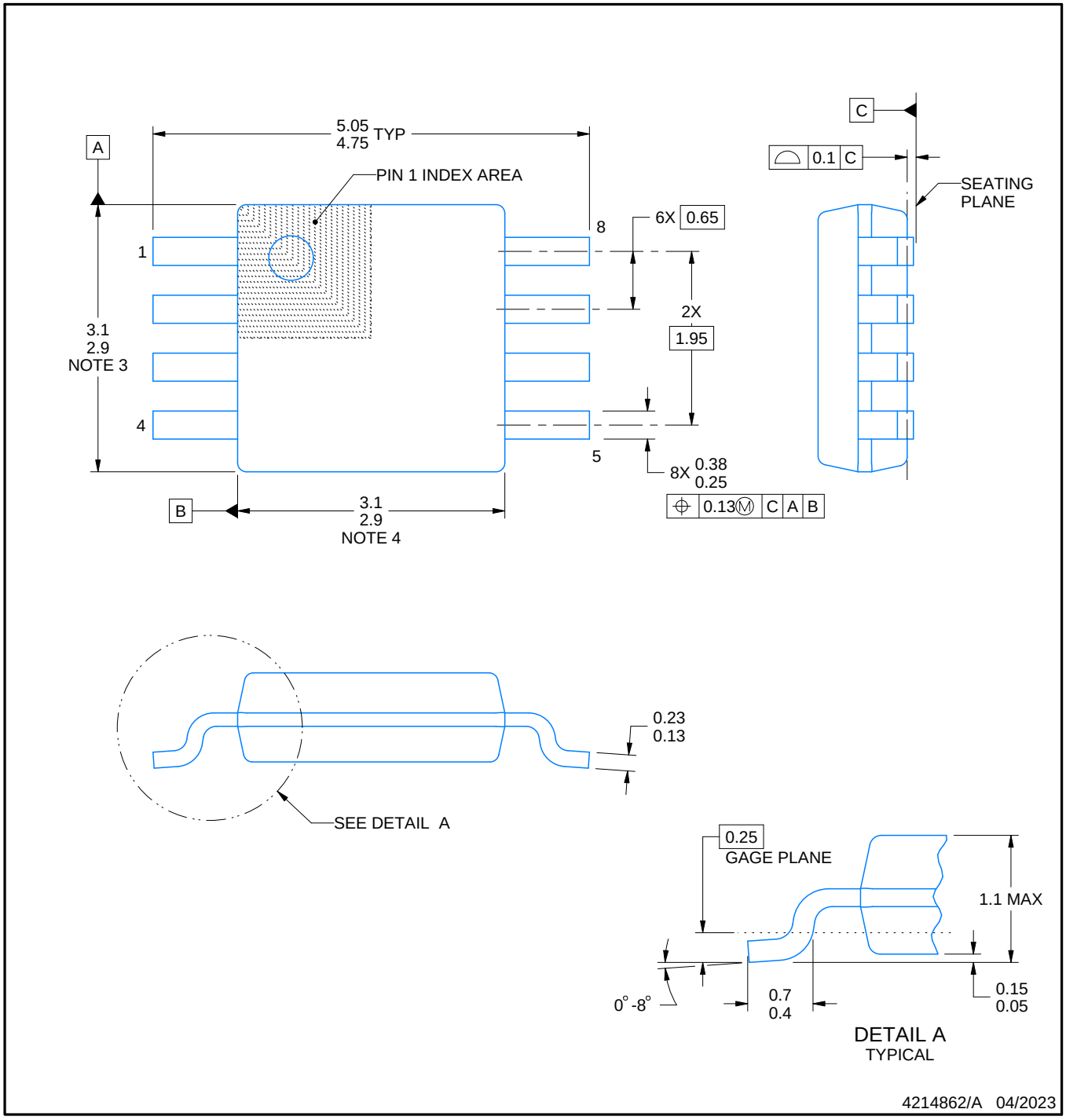

PowerPAD is a trademark of Texas Instruments.

NOTES:

1. All linear dimensions are in millimeters. Any dimensions in parenthesis are for reference only. Dimensioning and tolerancing per ASME Y14.5M.
2. This drawing is subject to change without notice.
3. This dimension does not include mold flash, protrusions, or gate burrs. Mold flash, protrusions, or gate burrs shall not exceed 0.15 mm per side.
4. This dimension does not include interlead flash. Interlead flash shall not exceed 0.25 mm per side.
5. Reference JEDEC registration MO-187.

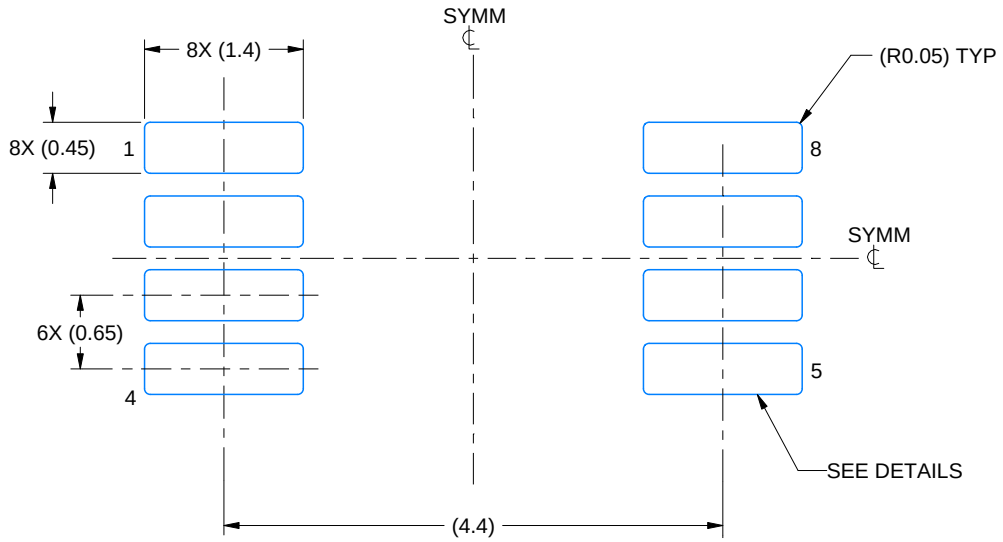

LAND PATTERN EXAMPLE
EXPOSED METAL SHOWN
SCALE: 15X

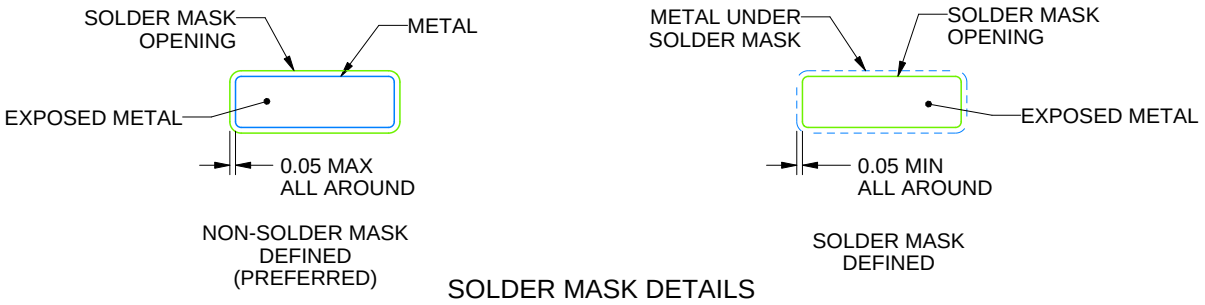

SOLDER MASK DETAILS

4214862/A 04/2023

NOTES: (continued)

6. Publication IPC-7351 may have alternate designs.
7. Solder mask tolerances between and around signal pads can vary based on board fabrication site.
8. Vias are optional depending on application, refer to device data sheet. If any vias are implemented, refer to their locations shown on this view. It is recommended that vias under paste be filled, plugged or tented.
9. Size of metal pad may vary due to creepage requirement.

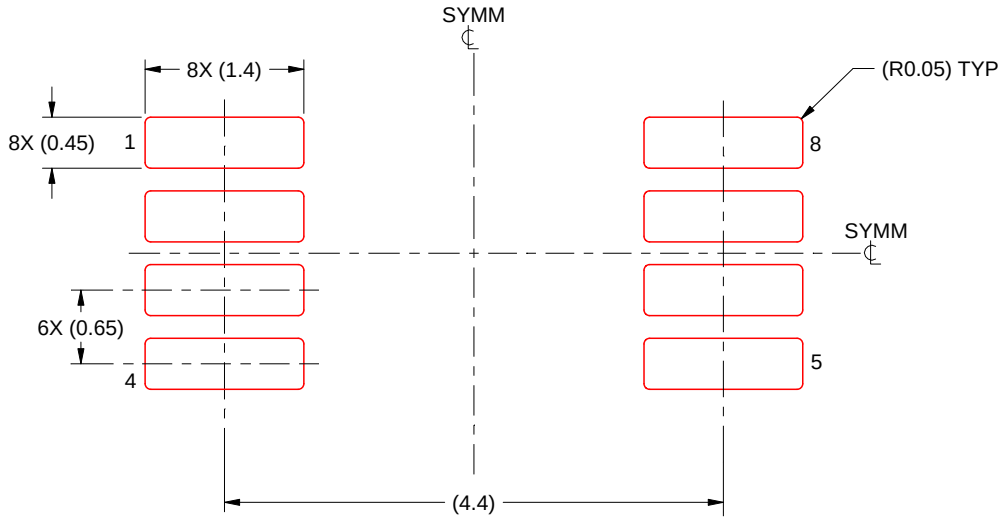

SOLDER PASTE EXAMPLE
SCALE: 15X

4214862/A 04/2023

NOTES: (continued)

11. Laser cutting apertures with trapezoidal walls and rounded corners may offer better paste release. IPC-7525 may have alternate design recommendations.
12. Board assembly site may have different recommendations for stencil design.

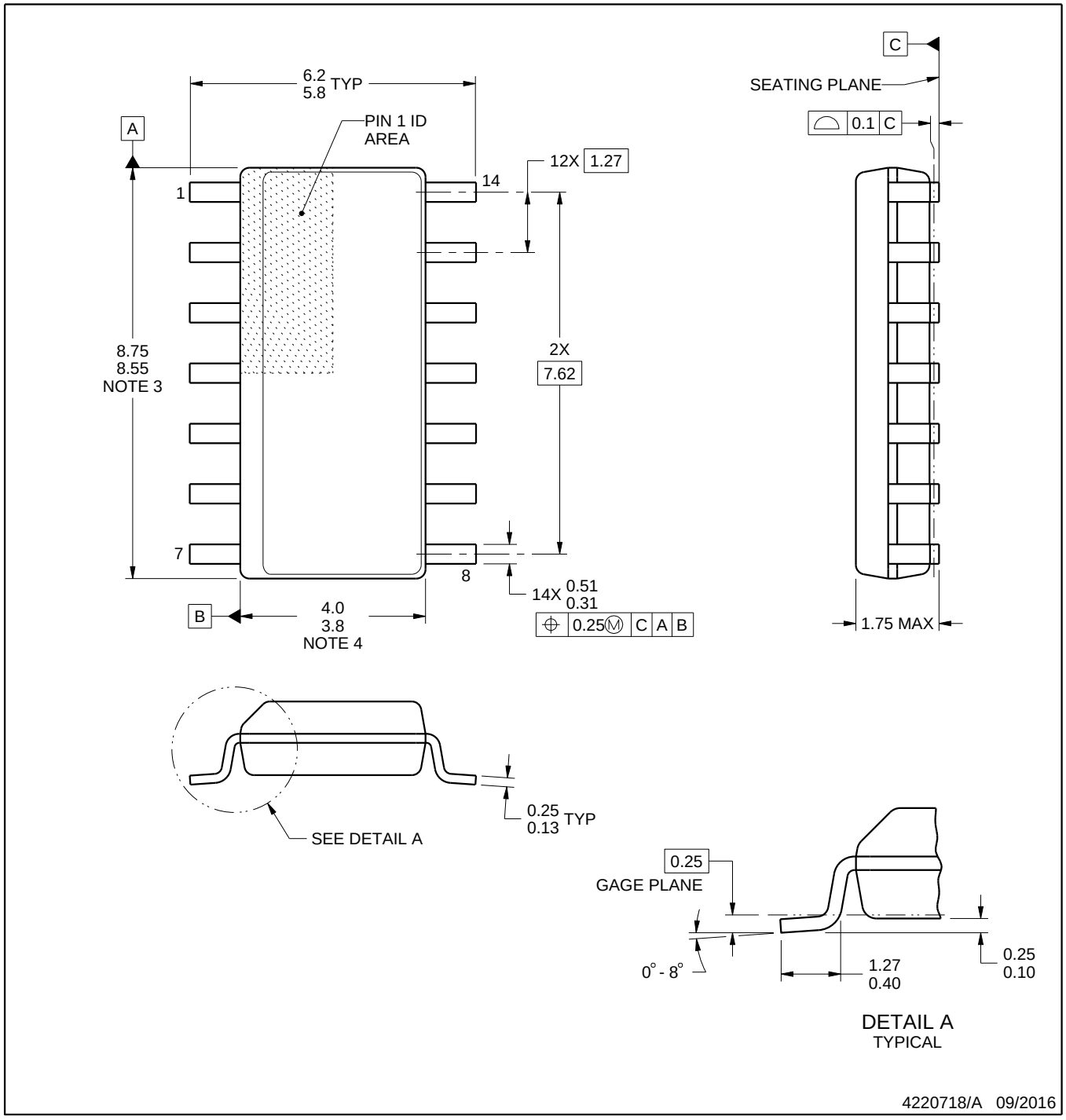

NOTES:

1. All linear dimensions are in millimeters. Dimensions in parenthesis are for reference only. Dimensioning and tolerancing per ASME Y14.5M.
2. This drawing is subject to change without notice.
3. This dimension does not include mold flash, protrusions, or gate burrs. Mold flash, protrusions, or gate burrs shall not exceed 0.15 mm, per side.
4. This dimension does not include interlead flash. Interlead flash shall not exceed 0.43 mm, per side.
5. Reference JEDEC registration MS-012, variation AB.

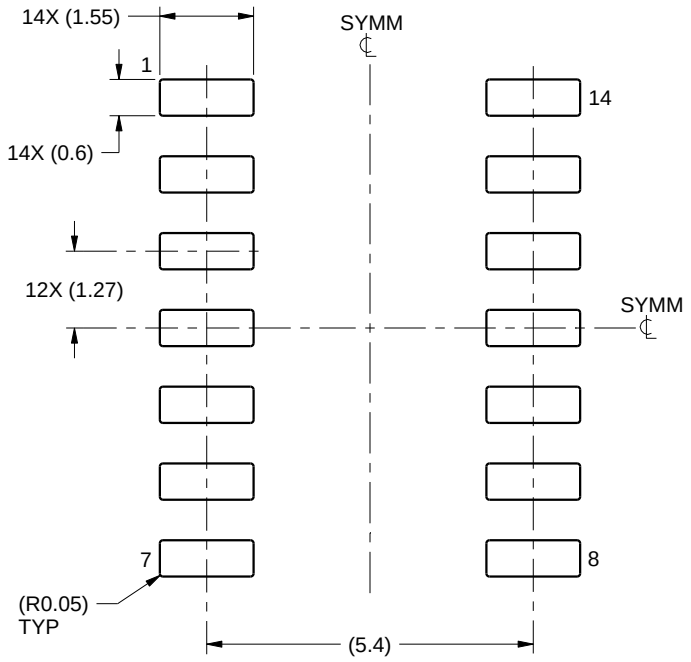

LAND PATTERN EXAMPLE
SCALE:8X

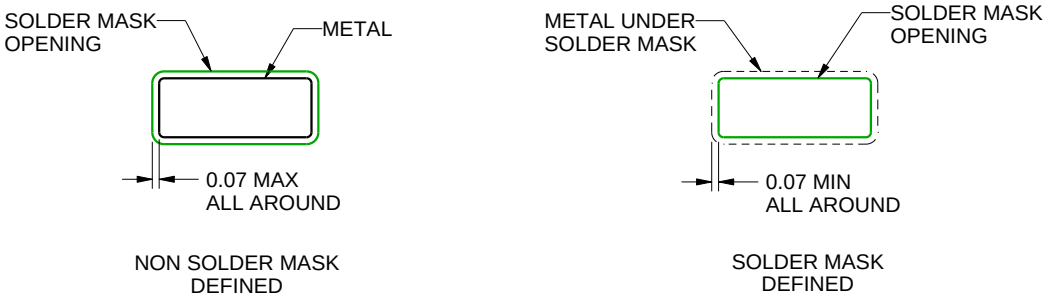

SOLDER MASK DETAILS

4220718/A 09/2016

NOTES: (continued)

6. Publication IPC-7351 may have alternate designs.
7. Solder mask tolerances between and around signal pads can vary based on board fabrication site.

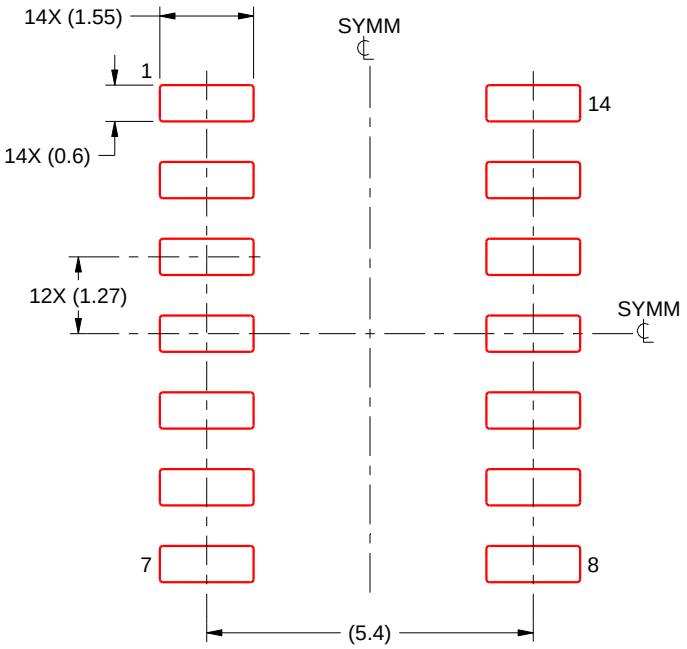

SOLDER PASTE EXAMPLE
BASED ON 0.125 mm THICK STENCIL
SCALE:8X

4220718/A 09/2016

NOTES: (continued)

8. Laser cutting apertures with trapezoidal walls and rounded corners may offer better paste release. IPC-7525 may have alternate design recommendations.
9. Board assembly site may have different recommendations for stencil design.

重要通知和免责声明

TI“按原样”提供技术和可靠性数据（包括数据表）、设计资源（包括参考设计）、应用或其他设计建议、网络工具、安全信息和其他资源，不保证没有瑕疵且不做出任何明示或暗示的担保，包括但不限于对适销性、与某特定用途的适用性或不侵犯任何第三方知识产权的暗示担保。

这些资源可供使用 TI 产品进行设计的熟练开发人员使用。您将自行承担以下全部责任：(1) 针对您的应用选择合适的 TI 产品，(2) 设计、验证并测试您的应用，(3) 确保您的应用满足相应标准以及任何其他安全、安保法规或其他要求。

这些资源如有变更，恕不另行通知。TI 授权您仅可将这些资源用于研发本资源所述的 TI 产品的相关应用。严禁以其他方式对这些资源进行复制或展示。您无权使用任何其他 TI 知识产权或任何第三方知识产权。对于因您对这些资源的使用而对 TI 及其代表造成的任何索赔、损害、成本、损失和债务，您将全额赔偿，TI 对此概不负责。

TI 提供的产品受 TI 销售条款)、TI 通用质量指南 或 ti.com 上其他适用条款或 TI 产品随附的其他适用条款的约束。TI 提供这些资源并不会扩展或以其他方式更改 TI 针对 TI 产品发布的适用的担保或担保免责声明。 除非德州仪器 (TI) 明确将某产品指定为定制产品或客户特定产品，否则其产品均为按确定价格收入目录的标准通用器件。

TI 反对并拒绝您可能提出的任何其他或不同的条款。

版权所有 © 2026，德州仪器 (TI) 公司

最后更新日期：2025 年 10 月