MSP430FR5739-EP 混合信号微控制器

1 器件概述

1.1 特性

- 嵌入式微控制器
  - 时钟频率高达 24MHz 的 16 位精简指令集 (RISC) 架构
  - 宽电源电压范围（2V 至 3.6V）
  - 工作温度范围 -55°C 至 85°C
- 经优化超低功率模式
  - 激活模式：81.4µA/MHz（典型值）
  - 待机（具有 VLO 的 LPM3）：6.3µA（典型值）
  - 实时时钟（具有晶振的 LPM3.5）：1.5µA（典型值）
  - 关断 (LPM4.5)：0.32µA（典型值）
- 超低功率铁电 RAM (FRAM)
  - 高达 16KB 的非易失性存储器
  - 超低功率写入
  - 125ns 每个字的快速写入（1ms 内写入 16KB）
  - 内置纠错编码 (ECC) 和存储器保护单元 (MPU)
  - 通用内存 = 程序 + 数据 + 存储
  - 10^{15} 写入周期持耐久性
  - 抗辐射和非磁性
- 智能数字外设
  - 32 位硬件乘法器 (MPY)
  - 3 通道内部直接存储器访问 (DMA)
  - 具有日历和报警功能的实时时钟 (RTC)
  - 5 个具有多达 3 个捕捉/比较寄存器的 16 位定时器
  - 16 位循环冗余校验器 (CRC)
- 高性能模拟
  - 支持电压基准和可编程滞后的 16 通道模拟比较器
  - 具有内部基准、采样与保持功能的 14 通道、10 位模数转换器
    - 在流耗为 100µA 时为 200ksps
- 增强型串行通信
  - eUSCI_A0 和 eUSCI_A1 支持：
    - 支持自动波特率侦测的通用异步收发器 (UART)
    - IrDA 编码和解码
    - 速率高达 10Mbps 的串行外设接口 (SPI)
  - eUSCI_B0 支持：
    - 支持多个从器件寻址的 I^2C
    - 速率高达 10Mbps 的串行外设接口 (SPI)
  - 硬件通用异步收发器 (UART) 引导加载程序 (BSL)
- 电源管理系统
  - 完全集成的低压降稳压器 (LDO)
  - 具有复位功能的内核与电源电压监控器
  - 常开模式的零功率欠压检测
  - 无需外部电压的串行板上程序设计
- 灵活的时钟系统
  - 具有 6 个可选出厂校准频率的固定频率数控振荡器 (DCO)（视器件而定）
  - 低功率低频内部时钟源 (VLO)
  - 32kHz 晶振 (LFXT)
  - 高频晶振 (HFXT)
- 开发工具和软件
  - 免费专业开发环境 (Code Composer Studio ™ IDE)
  - 低成本全功能套件 ()
  - 完全开发套件(MSP-FET430U40A)
  - 目标板 (MSP-TS430RHA40A)
- 系列产品成员
  - 在 中汇总的变量和可用封装
  - 如需了解完整的模块说明, 请查阅 *《MSP430FR57xx 系列用户指南》* (SLAU272)
- 支持国防、航天和医疗应用
  - 受控基线
  - 同一组装和测试场所
  - 同一制造场所
  - 支持扩展温度范围（-55°C 至 85°C）（一些注释的参数仅支持 –40°C 至 85°C）
  - 延长的产品生命周期
  - 延长的产品变更通知
  - 产品可追溯性

PRODUCTION DATA information is current as of publication date. Products conform to specifications per the terms of the Texas Instruments standard warranty. Production processing does not necessarily include testing of all parameters.

1.2 应用范围

- 家庭自动化
- 安全性
- 传感器管理
- 数据采集

注意事项 这些产品采用 FRAM 非易失性存储器技术。 FRAM 保持对于极端温度环境敏感，例如那些回流焊接或者手工焊接时产生的温度。 更多信息，请参见 *最大绝对额定值*。

注意事项 必须采用与器件级 ESD 规范兼容的系统级 ESD 保护以防止电气过载或者数据或代码内存的干扰。 要获得更多信息，请参阅应用报告 《*MSP430™ 系统级 ESD 注意事项*》 (SLAA530)

1.3 说明

德州仪器 (TI) 573MSP430FRx 系列超低功率微控制器包含多个器件，该系列器件具有嵌入式 FRAM 非易失性存储器，超低功率 16 位 MSP430™ CPU，以及针对多种应用的不同外设。 此架构，FRAM，和外设，与 7 种低功率模式组合在一起，针对在便携式和无线感测应用中实现延长电池寿命进行了优化。 FRAM 是一款全新的非易失性存储器，此存储器将 SRAM 的速度，灵活性，和耐久性与闪存的稳定性和可靠性结合在一起，总体能耗更低。 其外设包括：1 个 10 位模数转换器 (ADC)、1 个具有基准电压生成和滞后功能的 16 通道比较器、3 个支持 I^2C、SPI 或 UART 协议的增强型串行通道、1 个内部直接存储器访问 (DMA)、1 个硬件乘法器、1 个实时时钟 (RTC)、5 个 16 位定时器和数字 I/O。

器件信息(1)

器件型号	封装	封装尺寸(2)
MSP430FR5739-EP	VQFN (40)	6.00mm x 6.00mm

(1) 要获得最新的产品、封装和订购信息，请参见 节 9 中的封装选项附录，或者浏览 TI 网站 www.ti.com.cn。
(2) 这里显示的尺寸为近似值。 要获得包含容差值的封装尺寸，请参见 节 9中的机械数据。

1.4 功能框图

本节给出了 MSP430FR5739 器件采用 RHA 封装时的功能框图。

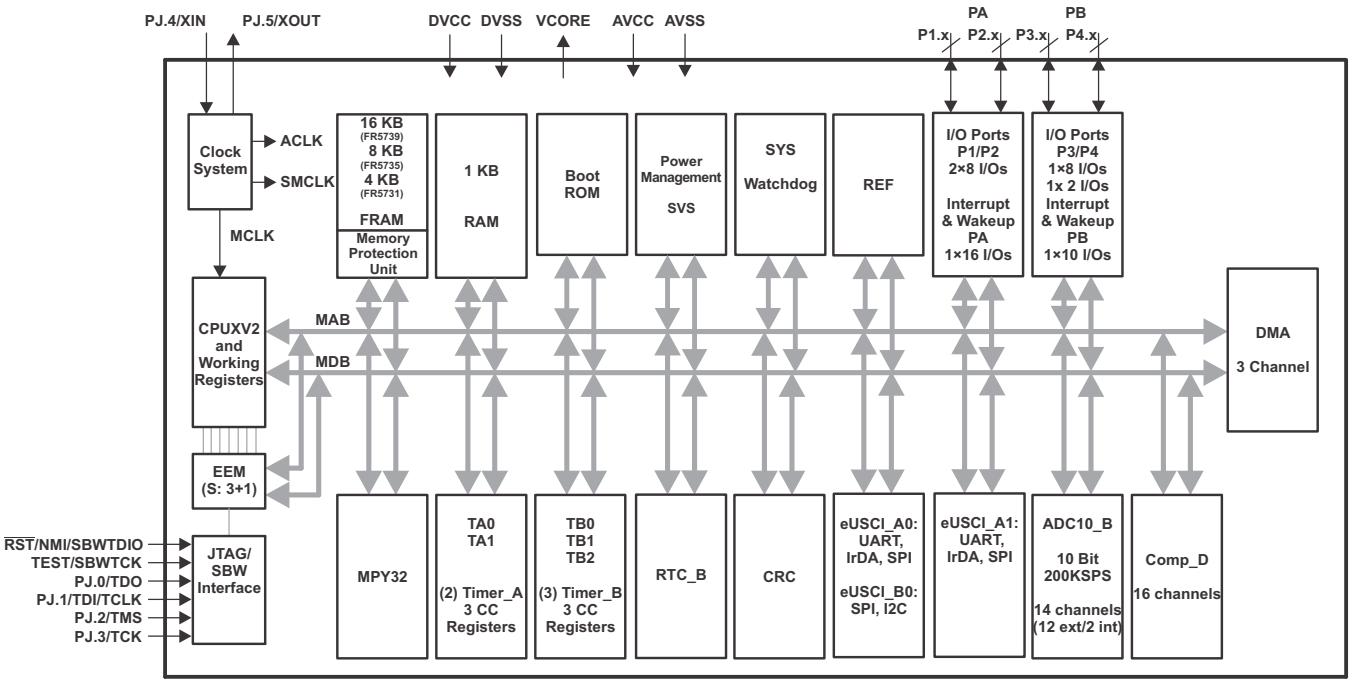

版权 © 2014, Texas Instruments Incorporated

内容

1 器件概述 1
1.1 特性 1
1.2 应用范围 2
1.3 说明 2
1.4 功能框图 2
2 修订历史记录 4
3 Pin Configuration and Functions 5
3.1 Pin Diagram 5
3.2 Signal Descriptions 6
4 Specifications 10
4.1 Absolute Maximum Ratings 10
4.2 Recommended Operating Conditions 10
4.3 Thermal Information 10
4.4 Active Mode Supply Current Into V_{CC} Excluding External Current 11
4.5 Low-Power Mode Supply Currents (Into V_{CC}) Excluding External Current 13
4.6 Schmitt-Trigger Inputs – General Purpose I/O (P1.0 to P1.7, P2.0 to P2.7, P3.0 to P3.7, P4.0 to P4.1, PJ.0 to PJ.5, $\overline{RST}$/NMI) 14
4.7 Inputs – Ports P1 and P2 (P1.0 to P1.7, P2.0 to P2.7) 14
4.8 Leakage Current – General Purpose I/O (P1.0 to P1.7, P2.0 to P2.7, P3.0 to P3.7, P4.0 to P4.1, PJ.0 to PJ.5, $\overline{RST}$/NMI) 14
4.9 Outputs – General Purpose I/O (P1.0 to P1.7, P2.0 to P2.7, P3.0 to P3.7, P4.0 to P4.1, PJ.0 to PJ.5) 15
4.10 Output Frequency – General Purpose I/O (P1.0 to P1.7, P2.0 to P2.7, P3.0 to P3.7, P4.0 to P4.1, PJ.0 to PJ.5) 15
4.11 Typical Characteristics – Outputs 16
4.12 Crystal Oscillator, XT1, Low-Frequency (LF) Mode 18
4.13 Crystal Oscillator, XT1, High-Frequency (HF) Mode 19
4.14 Internal Very-Low-Power Low-Frequency Oscillator (VLO) 20
4.15 DCO Frequencies 21
4.16 MODOSC 21
4.17 PMM, Core Voltage 22
4.18 PMM, SVS, BOR 22
4.19 Wake-Up from Low Power Modes 22
4.20 Timer_A 23
4.21 Timer_B 23
4.22 eUSCI (UART Mode) Recommended Operating Conditions 23
4.23 eUSCI (UART Mode) 23
4.24 eUSCI (SPI Master Mode) Recommended Operating Conditions 24
4.25 eUSCI (SPI Master Mode) 24
4.26 eUSCI (SPI Slave Mode) 26
4.27 eUSCI (I^2C Mode) 28
4.28 10-Bit ADC, Power Supply and Input Range Conditions 29
4.29 10-Bit ADC, Timing Parameters 29
4.30 10-Bit ADC, Linearity Parameters 29
4.31 REF, External Reference 30
4.32 REF, Built-In Reference 30
4.33 REF, Temperature Sensor and Built-In V_{MID} 31
4.34 Comparator_D 32
4.35 FRAM 32
4.36 JTAG and Spy-Bi-Wire Interface 33
5 Detailed Description 34
5.1 Functional Block Diagram 34
5.2 CPU 34
5.3 Operating Modes 34
5.4 Interrupt Vector Addresses 36
5.5 Memory Organization 38
5.6 Bootstrap Loader (BSL) 39
5.7 JTAG Operation 39
5.8 FRAM 40
5.9 Memory Protection Unit (MPU) 40
5.10 Peripherals 40
6 Input/Output Schematics 60
6.1 Port P1, P1.0 to P1.2, Input/Output With Schmitt Trigger 60
6.2 Port P1, P1.3 to P1.5, Input/Output With Schmitt Trigger 62
6.3 Port P1, P1.6 to P1.7, Input/Output With Schmitt Trigger 64
6.4 Port P2, P2.0 to P2.2, Input/Output With Schmitt Trigger 65
6.5 Port P2, P2.3 to P2.4, Input/Output With Schmitt Trigger 66
6.6 Port P2, P2.5 to P2.6, Input/Output With Schmitt Trigger 68
6.7 Port P2, P2.7, Input/Output With Schmitt Trigger 69
6.8 Port P3, P3.0 to P3.3, Input/Output With Schmitt Trigger 70
6.9 Port P3, P3.4 to P3.6, Input/Output With Schmitt Trigger 72
6.10 Port P3, P3.7, Input/Output With Schmitt Trigger 73
6.11 Port P4, P4.0, Input/Output With Schmitt Trigger 74
6.12 Port P4, P4.1, Input/Output With Schmitt Trigger 75
6.13 Port J, J.0 to J.3 JTAG pins TDO, TMS, TCK, TDI/TCLK, Input/Output With Schmitt Trigger or Output 76
6.14 Port PJ, PJ.4 and PJ.5 Input/Output With Schmitt Trigger 79
7 Device Descriptors (TLV) 81
8 器件和文档支持 84
8.1 器件支持 84
8.2 文档支持 86
8.3 Community Resources 87
8.4 商标 87
8.5 静电放电警告 87
8.6 术语表 87
9 机械封装和可订购信息 87
9.1 封装信息 87

2 修订历史记录

Changes from Original (November 2014) to Revision A	Page
• 器件状态更新为生产数据	1

Copyright © 2014, Texas Instruments Incorporated

3 Pin Configuration and Functions

3.1 Pin Diagram

Figure 3-1 shows the pin diagram for the MSP430FR5739-EP device in the 40-pin RHA package.

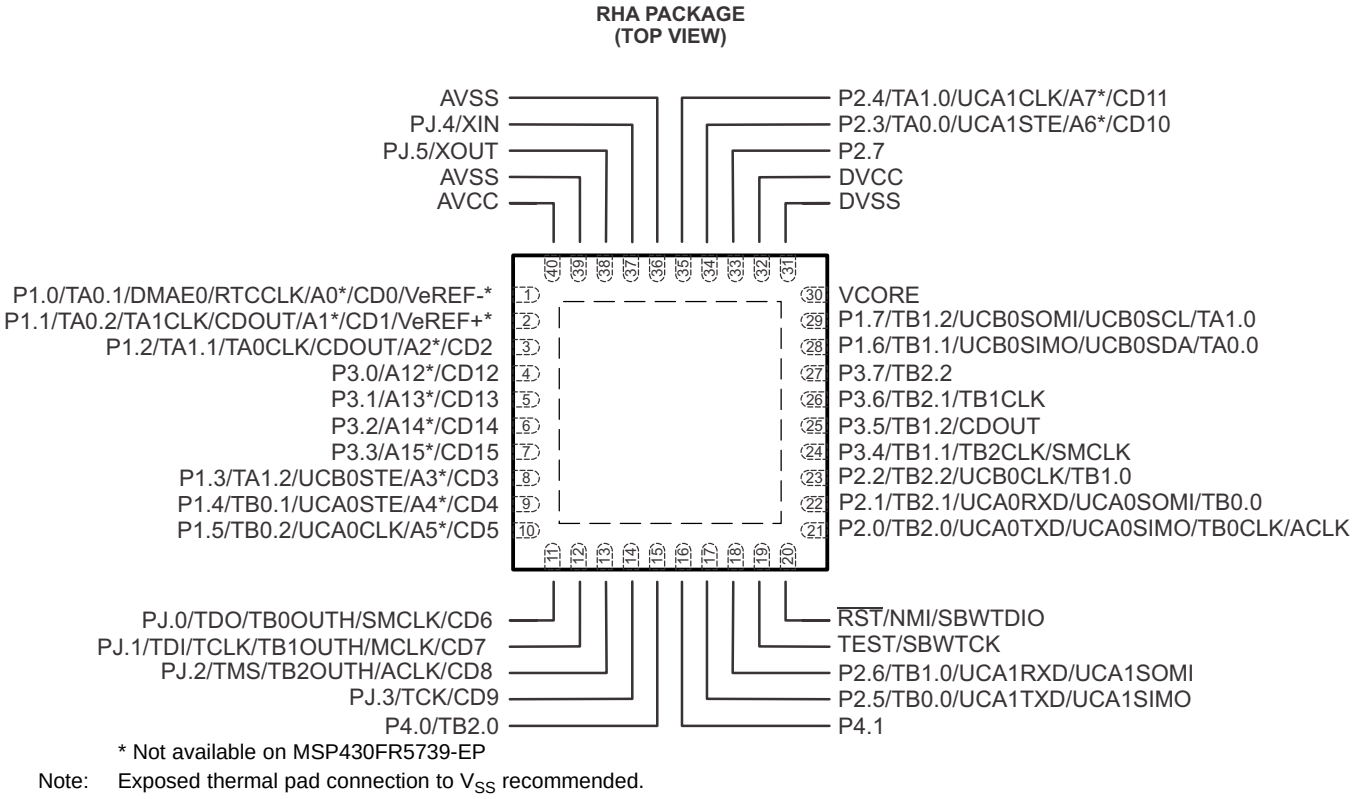

Figure 3-1. 40-Pin RHA Package (Top View)

3.2 Signal Descriptions

Table 3-1 describes the signals.

Table 3-1. Signal Descriptions

PIN		I/O (1)	DESCRIPTION
NAME	NO.		
P1.0/TA0.1/DMAE0/ RTCCLK/A0/CD0/VeREF-	1	I/O	General-purpose digital I/O with port interrupt and wake up from LPMx.5 TA0 CCR1 capture: CCI1A input, compare: Out1 External DMA trigger RTC clock calibration output Analog input A0 – ADC (not available on devices without ADC) Comparator_D input CD0 External applied reference voltage (not available on devices without ADC)
P1.1/TA0.2/TA1CLK/ CDOUT/A1/CD1/VeREF+	2	I/O	General-purpose digital I/O with port interrupt and wake up from LPMx.5 TA0 CCR2 capture: CCI2A input, compare: Out2 TA1 input clock Comparator_D output Analog input A1 – ADC (not available on devices without ADC) Comparator_D input CD1 Input for an external reference voltage to the ADC (not available on devices without ADC)
P1.2/TA1.1/TA0CLK/ CDOUT/A2/CD2	3	I/O	General-purpose digital I/O with port interrupt and wake up from LPMx.5 TA1 CCR1 capture: CCI1A input, compare: Out1 TA0 input clock Comparator_D output Analog input A2 – ADC (not available on devices without ADC) Comparator_D input CD2
P3.0/A12/CD12	4	I/O	General-purpose digital I/O with port interrupt and wake up from LPMx.5 Analog input A12 – ADC (not available on devices without ADC) Comparator_D input CD12
P3.1/A13/CD13	5	I/O	General-purpose digital I/O with port interrupt and wake up from LPMx.5 Analog input A13 – ADC Comparator_D input CD13
P3.2/A14/CD14	6	I/O	General-purpose digital I/O with port interrupt and wake up from LPMx.5 Analog input A14 – ADC (not available on devices without ADC) Comparator_D input CD14
P3.3/A15/CD15	7	I/O	General-purpose digital I/O with port interrupt and wake up from LPMx.5 Analog input A15 – ADC (not available on devices without ADC) Comparator_D input CD15
P1.3/TA1.2/UCB0STE/ A3/CD3	8	I/O	General-purpose digital I/O with port interrupt and wake up from LPMx.5 TA1 CCR2 capture: CCI2A input, compare: Out2 Slave transmit enable – eUSCI_B0 SPI mode Analog input A3 – ADC (not available on devices without ADC) Comparator_D input CD3

(1) I = input, O = output, N/A = not available

Copyright © 2014, Texas Instruments Incorporated

Table 3-1. Signal Descriptions (continued)

PIN		I/O (1)	DESCRIPTION
NAME	NO.		
P1.4/TB0.1/UCA0STE/ A4/CD4	9	I/O	General-purpose digital I/O with port interrupt and wake up from LPMx.5 TB0 CCR1 capture: CCI1A input, compare: Out1 Slave transmit enable – eUSCI_A0 SPI mode Analog input A4 – ADC (not available on devices without ADC) Comparator_D input CD4
P1.5/TB0.2/UCA0CLK/ A5/CD5	10	I/O	General-purpose digital I/O with port interrupt and wake up from LPMx.5 TB0 CCR2 capture: CCI2A input, compare: Out2 Clock signal input – eUSCI_A0 SPI slave mode, Clock signal output – eUSCI_A0 SPI master mode Analog input A5 – ADC (not available on devices without ADC) Comparator_D input CD5
PJ.0/TDO/TB0OUTH/ SMCLK/CD6 (2)	11	I/O	General-purpose digital I/O Test data output port Switch all PWM outputs high impedance input – TB0 SMCLK output Comparator_D input CD6
PJ.1/TDI/TCLK/TB1OUTH/ MCLK/CD7 (2)	12	I/O	General-purpose digital I/O Test data input or test clock input Switch all PWM outputs high impedance input – TB1 (not available on devices without TB1) MCLK output Comparator_D input CD7
PJ.2/TMS/TB2OUTH/ ACLK/CD8 (2)	13	I/O	General-purpose digital I/O Test mode select Switch all PWM outputs high impedance input – TB2 (not available on devices without TB2) ACLK output Comparator_D input CD8
PJ.3/TCK/CD9 (2)	14	I/O	General-purpose digital I/O Test clock Comparator_D input CD9
P4.0/TB2.0	15	I/O	General-purpose digital I/O with port interrupt and wake up from LPMx.5 TB2 CCR0 capture: CCI0B input, compare: Out0 (not available on devices without TB2)
P4.1	16	I/O	General-purpose digital I/O with port interrupt and wake up from LPMx.5
P2.5/TB0.0/UCA1TXD/ UCA1SIMO	17	I/O	General-purpose digital I/O with port interrupt and wake up from LPMx.5 TB0 CCR0 capture: CCI0A input, compare: Out0 Transmit data – eUSCI_A1 UART mode, Slave in, master out – eUSCI_A1 SPI mode (not available on devices without UCSI_A1)
P2.6/TB1.0/UCA1RXD/ UCA1SOMI	18	I/O	General-purpose digital I/O with port interrupt and wake up from LPMx.5 TB1 CCR0 capture: CCI0A input, compare: Out0 (not available on devices without TB1) Receive data – eUSCI_A1 UART mode, Slave out, master in – eUSCI_A1 SPI mode (not available on devices without UCSI_A1)

(2) See Section 5.7 for use with JTAG function.

Copyright © 2014, Texas Instruments Incorporated

Table 3-1. Signal Descriptions (continued)

PIN		I/O (1)	DESCRIPTION
NAME	NO.		
TEST/SBWTCK (2) (3)	19	I	Test mode pin – enable JTAG pins Spy-Bi-Wire input clock
$\overline{\text{RST}}$/NMI/SBWTDIO (2) (3)	20	I/O	Reset input active low Non-maskable interrupt input Spy-Bi-Wire data input/output
P2.0/TB2.0/UCA0TXD/ UCA0SIMO/TB0CLK/ACLK (3)	21	I/O	General-purpose digital I/O with port interrupt and wake up from LPMx.5 TB2 CCR0 capture: CCI0A input, compare: Out0 (not available on devices without TB2) Transmit data – eUSCI_A0 UART mode Slave in, master out – eUSCI_A0 SPI mode TB0 clock input ACLK output
P2.1/TB2.1/UCA0RXD/ UCA0SOMI/TB0.0 (3)	22	I/O	General-purpose digital I/O with port interrupt and wake up from LPMx.5 TB2 CCR1 capture: CCI1A input, compare: Out1 (not available on devices without TB2) Receive data – eUSCI_A0 UART mode Slave out, master in – eUSCI_A0 SPI mode TB0 CCR0 capture: CCI0A input, compare: Out0
P2.2/TB2.2/UCB0CLK/ TB1.0	23	I/O	General-purpose digital I/O with port interrupt and wake up from LPMx.5 TB2 CCR2 capture: CCI2A input, compare: Out2 (not available on devices without TB2) Clock signal input – eUSCI_B0 SPI slave mode, Clock signal output – eUSCI_B0 SPI master mode TB1 CCR0 capture: CCI0A input, compare: Out0 (not available on devices without TB1)
P3.4/TB1.1/TB2CLK/ SMCLK	24	I/O	General-purpose digital I/O with port interrupt and wake up from LPMx.5 TB1 CCR1 capture: CCI1B input, compare: Out1 (not available on devices without TB1) TB2 clock input (not available on devices without TB2) SMCLK output
P3.5/TB1.2/CDOUT	25	I/O	General-purpose digital I/O with port interrupt and wake up from LPMx.5 TB1 CCR2 capture: CCI2B input, compare: Out2 (not available on devices without TB1) Comparator_D output
P3.6/TB2.1/TB1CLK	26	I/O	General-purpose digital I/O with port interrupt and wake up from LPMx.5 (not available on package options PW, RGE) TB2 CCR1 capture: CCI1B input, compare: Out1 (not available on devices without TB2) TB1 clock input (not available on devices without TB1)
P3.7/TB2.2	27	I/O	General-purpose digital I/O with port interrupt and wake up from LPMx.5 TB2 CCR2 capture: CCI2B input, compare: Out2 (not available on devices without TB2)
P1.6/TB1.1/UCB0SIMO/ UCB0SDA/TA0.0	28	I/O	General-purpose digital I/O with port interrupt and wake up from LPMx.5 TB1 CCR1 capture: CCI1A input, compare: Out1 (not available on devices without TB1) Slave in, master out – eUSCI_B0 SPI mode I2C data – eUSCI_B0 I2C mode TA0 CCR0 capture: CCI0A input, compare: Out0

(3) See Section 5.6 and Section 5.7 for use with BSL and JTAG functions.

Copyright © 2014, Texas Instruments Incorporated

Table 3-1. Signal Descriptions (continued)

PIN		I/O (1)	DESCRIPTION
NAME	NO.		
P1.7/TB1.2/UCB0SOMI/ UCB0SCL/TA1.0	29	I/O	General-purpose digital I/O with port interrupt and wake up from LPMx.5 TB1 CCR2 capture: CCI2A input, compare: Out2 (not available on devices without TB1) Slave out, master in – eUSCI_B0 SPI mode I2C clock – eUSCI_B0 I2C mode TA1 CCR0 capture: CCI0A input, compare: Out0
VCORE (4)	30		Regulated core power supply (internal use only, no external current loading)
DVSS	31		Digital ground supply
DVCC	32		Digital power supply
P2.7	33	I/O	General-purpose digital I/O with port interrupt and wake up from LPMx.5
P2.3/TA0.0/UCA1STE/ A6/CD10	34	I/O	General-purpose digital I/O with port interrupt and wake up from LPMx.5 TA0 CCR0 capture: CCI0B input, compare: Out0 Slave transmit enable – eUSCI_A1 SPI mode (not available on devices without eUSCI_A1) Analog input A6 – ADC (not available on devices without ADC) Comparator_D input CD10
P2.4/TA1.0/UCA1CLK/ A7/CD11	35	I/O	General-purpose digital I/O with port interrupt and wake up from LPMx.5 TA1 CCR0 capture: CCI0B input, compare: Out0 Clock signal input – eUSCI_A1 SPI slave mode, Clock signal output – eUSCI_A1 SPI master mode (not available on devices without eUSCI_A1) Analog input A7 – ADC (not available on devices without ADC) Comparator_D input CD11
AVSS	36		Analog ground supply
PJ.4/XIN	37	I/O	General-purpose digital I/O Input terminal for crystal oscillator XT1
PJ.5/XOUT	38	I/O	General-purpose digital I/O Output terminal of crystal oscillator XT1
AVSS	39		Analog ground supply
AVCC	40		Analog power supply
QFN Pad	Pad		QFN package pad. Connection to VSS recommended.

(4) VCORE is for internal use only. No external current loading is possible. VCORE should only be connected to the recommended capacitor value, C_{VCORE}.

4 Specifications

4.1 Absolute Maximum Ratings(1)

over operating free-air temperature range (unless otherwise noted)

		MIN	MAX	UNIT
Voltage applied at V_{CC} to V_{SS}		–0.3	4.1	V
Voltage applied to any pin (excluding VCORE) (2)		–0.3	V_{CC} + 0.3 V	V
Diode current at any device pin			±2	mA
T_J	Maximum junction temperature		95	°C
T_{stg}	Storage temperature range(3) (4) (5)	–55	125	°C

(1) Stresses beyond those listed under *Absolute Maximum Ratings* may cause permanent damage to the device. These are stress ratings only, and functional operation of the device at these or any other conditions beyond those indicated under *Recommended Operating Conditions* is not implied. Exposure to absolute-maximum-rated conditions for extended periods may affect device reliability.
(2) All voltages referenced to V_{SS}. V_{CORE} is for internal device use only. No external DC loading or voltage should be applied.
(3) Data retention on FRAM memory cannot be ensured when exceeding the specified maximum storage temperature, T_{stg}.
(4) For soldering during board manufacturing, it is required to follow the current JEDEC J-STD-020 specification with peak reflow temperatures not higher than classified on the device label on the shipping boxes or reels.
(5) Programming of devices with user application code should only be performed after reflow or hand soldering. Factory programmed information, such as calibration values, are designed to withstand the temperatures reached in the current JEDEC J-STD-020 specification.

4.2 Recommended Operating Conditions

Typical values are specified at V_{CC} = 3.3 V and T_A = 25°C (unless otherwise noted)

			MIN	NOM	MAX	UNIT
V_{CC}	Supply voltage during program execution and FRAM programming (AVCC = DVCC) (1)		2.0		3.6	V
V_{SS}	Supply voltage (AVSS = DVSS)			0		V
T_A	Operating free-air temperature		–55		85	°C
T_J	Operating junction temperature		–55		85	°C
C_{VCORE}	Required capacitor at VCORE(2)			470		nF
C_{VCC}/ C_{VCORE}	Capacitor ratio of VCC to VCORE		10			
f_{SYSTEM}	Processor frequency (maximum MCLK frequency)(3)	No FRAM wait states(4), 2 V ≤ V_{CC} ≤ 3.6 V	0		8.0	MHz
		With FRAM wait states(4), NACCESS = {2}, NPRECHG = {1}, 2 V ≤ V_{CC} ≤ 3.6 V	0		24.0	

(1) It is recommended to power AVCC and DVCC from the same source. A maximum difference of 0.3 V between AVCC and DVCC can be tolerated during power up and operation.
(2) A capacitor tolerance of ±20% or better is required.
(3) Modules may have a different maximum input clock specification. See the specification of the respective module in this data sheet.
(4) When using manual wait state control, see the *MSP430FR57xx Family User's Guide* (SLAU272) for recommended settings for common system frequencies.

4.3 Thermal Information

THERMAL METRIC(1)		MSP430FR5739-EP VQFN 40 PINS	UNIT
$R_{\theta JA}$	Junction-to-ambient thermal resistance	37.8	°C/W
$R_{\theta JC(top)}$	Junction-to-case (top) thermal resistance	27.4	
$R_{\theta JB}$	Junction-to-board thermal resistance	12.6	
ψ_{JT}	Junction-to-top characterization parameter	0.4	
ψ_{JB}	Junction-to-board characterization parameter	12.6	
$R_{\theta JC(bot)}$	Junction-to-case (bottom) thermal resistance	3.6	

(1) For more information about traditional and new thermal metrics, see the *IC Package Thermal Metrics* application report, SPRA953.

Copyright © 2014, Texas Instruments Incorporated

4.4 Active Mode Supply Current Into V_{CC} Excluding External Current

over recommended operating free-air temperature (unless otherwise noted)(1) (2) (3)

PARAMETER	EXECUTION MEMORY	V_{CC}	Frequency ($f_{MCLK} = f_{SMCLK}$)(4)												UNIT
			1 MHz		4 MHz		8 MHz		16 MHz		20 MHz		24 MHz		
			TYP	MAX	TYP	MAX	TYP	MAX	TYP	MAX	TYP	MAX	TYP	MAX	
$I_{AM,\ FRAM_UNI}$(5)	FRAM	3 V	0.27		0.58		1.0		1.53		1.9		2.2		mA
$I_{AM,0\%}$(6)	FRAM 0% cache hit ratio	3 V	0.42	0.75	1.2	1.7	2.2	2.9	2.3	3.0	2.8	3.7	3.45	4.3	mA
$I_{AM,50\%}$(6) (7)	FRAM 50% cache hit ratio	3 V	0.31		0.73		1.3		1.75		2.1		2.5		
$I_{AM,66\%}$(6) (7)	FRAM 66% cache hit ratio	3 V	0.27		0.58		1.0		1.55		1.9		2.2		
$I_{AM,75\%}$(6) (7)	FRAM 75% cache hit ratio	3 V	0.25		0.5		0.82		1.3		1.6		1.8		
$I_{AM,100\%}$(6) (7)	FRAM 100% cache hit ratio	3 V	0.2	0.44	0.3	0.56	0.42	0.81	0.73	1.17	0.88	1.32	1.0	1.53	
$I_{AM,\ RAM}$(7) (8)	RAM	3 V	0.2	0.41	0.35	0.56	0.55	0.77	1.0	1.27	1.20	1.47	1.45	1.8	mA

(1) All inputs are tied to 0 V or to V_{CC}. Outputs do not source or sink any current.
(2) The currents are characterized with a Micro Crystal CC4V-T1A SMD crystal with a load capacitance of 9 pF. The internal and external load capacitance are chosen to closely match the required 9 pF.
(3) Characterized with program executing typical data processing.
(4) At MCLK frequencies above 8 MHz, the FRAM requires wait states. When wait states are required, the effective MCLK frequency, $f_{MCLK,eff}$, decreases. The effective MCLK frequency is also dependent on the cache hit ratio. SMCLK is not affected by the number of wait states or the cache hit ratio. The following equation can be used to compute $f_{MCLK,eff}$:
$f_{MCLK,eff,MHZ} = f_{MCLK,MHZ}$ x 1 / [# of wait states x ((1 - cache hit ratio percent/100)) + 1]
(5) Program and data reside entirely in FRAM. No wait states enabled. DCORSEL = 0, DCOFSELx = 3 (f_{DCO} = 8 MHz). MCLK = SMCLK.
(6) Program resides in FRAM. Data resides in SRAM. Average current dissipation varies with cache hit-to-miss ratio as specified. Cache hit ratio represents number cache accesses divided by the total number of FRAM accesses. For example, a 25% ratio implies one of every four accesses is from cache, the remaining are FRAM accesses.
For 1, 4, and 8 MHz, DCORSEL = 0, DCOFSELx = 3 (f_{DCO} = 8 MHz). MCLK = SMCLK. No wait states enabled.
For 16 MHz, DCORSEL = 1, DCOFSELx = 0 (f_{DCO} = 16 MHz). MCLK = SMCLK. One wait state enabled.
For 20 MHz, DCORSEL = 1, DCOFSELx = 2 (f_{DCO} = 20 MHz). MCLK = SMCLK. Three wait states enabled.
For 24 MHz, DCORSEL = 1, DCOFSELx = 3 (f_{DCO} = 24 MHz). MCLK = SMCLK. Three wait states enabled.
(7) See Figure 4-1 for typical curves. Each characteristic equation shown in the graph is computed using the least squares method for best linear fit using the typical data shown in Section 4.4.
f_{ACLK} = 32786 Hz, $f_{MCLK} = f_{SMCLK}$ at specified frequency. No peripherals active.
XTS = CPUOFF = SCG0 = SCG1 = OSCOFF= SMCLKOFF = 0.
(8) All execution is from RAM.
For 1, 4, and 8 MHz, DCORSEL = 0, DCOFSELx = 3 (f_{DCO} = 8 MHz). MCLK = SMCLK.
For 16 MHz, DCORSEL = 1, DCOFSELx = 0 (f_{DCO} = 16 MHz). MCLK = SMCLK.
For 20 MHz, DCORSEL = 1, DCOFSELx = 2 (f_{DCO} = 20 MHz). MCLK = SMCLK.
For 24 MHz, DCORSEL = 1, DCOFSELx = 3 (f_{DCO} = 24 MHz). MCLK = SMCLK.

Copyright © 2014, Texas Instruments Incorporated

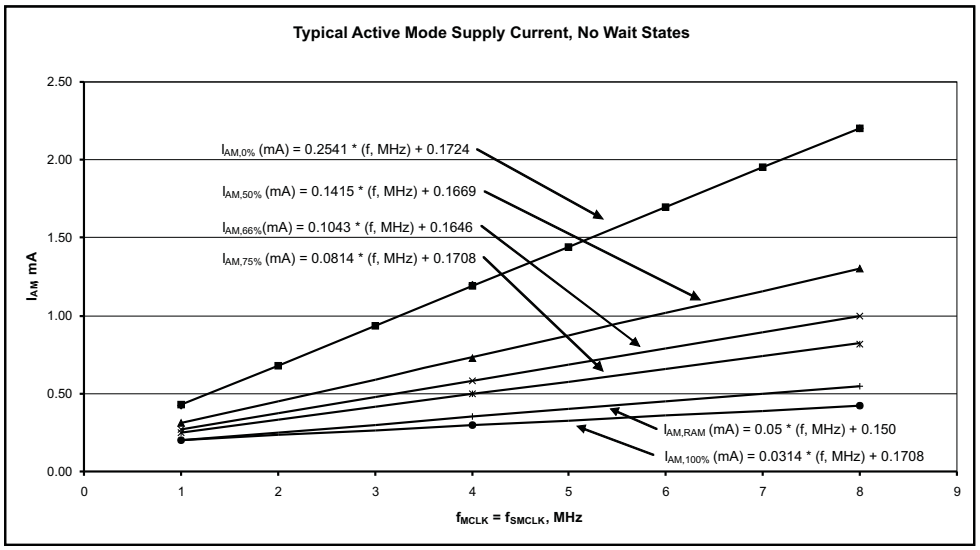

Figure 4-1. Typical Active Mode Supply Currents, No Wait States

Copyright © 2014, Texas Instruments Incorporated

4.5 Low-Power Mode Supply Currents (Into V_{CC}) Excluding External Current

over recommended ranges of supply voltage and operating free-air temperature (unless otherwise noted) (1) (2)

PARAMETER		V_{CC}	–55°C		25°C		85°C		UNIT
			TYP	MAX	TYP	MAX	TYP	MAX	
$I_{LPM0,1MHz}$	Low-power mode 0 (3) (4)	2 V, 3 V	166		175		225		µA
$_{LPM0,8MHz}$	Low-power mode 0 (5) (4)	2 V, 3 V	170		177	244	225	360	µA
$_{LPM0,24MHz}$	Low-power mode 0 (6) (4)	2 V, 3 V	274		285	340	340	455	µA
I_{LPM2}	Low-power mode 2 (7) (8)	2 V, 3 V	56		61	80	110	210	µA
$I_{LPM3,XT1LF}$	Low-power mode 3, crystal mode (9) (8)	2 V, 3 V	3.4		6.4	15	48	150	µA
$I_{LPM3,VLO}$	Low-power mode 3, VLO mode (10) (8)	2 V, 3 V	3.3		6.3	15	48	150	µA
I_{LPM4}	Low-power mode 4 (11) (8)	2 V, 3 V	2.9		5.9	15	48	150	µA
$I_{LPM3.5}$	Low-power mode 3.5 (12)	2 V, 3 V	1.3		1.5	2.2	2.8	5.0	µA
$I_{LPM4.5}$	Low-power mode 4.5 (13)	2 V, 3 V	0.3		0.32	0.66	0.57	2.55	µA

(1) All inputs are tied to 0 V or to V_{CC}. Outputs do not source or sink any current.
(2) The currents are characterized with a Micro Crystal CC4V-T1A SMD crystal with a load capacitance of 9 pF. The internal and external load capacitance are chosen to closely match the required 9 pF.
(3) Current for watchdog timer clocked by SMCLK included. ACLK = low-frequency crystal operation (XTS = 0, XT1DRIVEx = 0). CPUOFF = 1, SCG0 = 0, SCG1 = 0, OSCOFF = 0 (LPM0), f_{ACLK} = 32768 Hz, f_{MCLK} = 0 MHz, f_{SMCLK} = 1 MHz. DCORSEL = 0, DCOFSELx = 3 (f_{DCO} = 8 MHz)
(4) Current for brownout, high-side supervisor (SVS_H) and low-side supervisor (SVS_L) included.
(5) Current for watchdog timer clocked by SMCLK included. ACLK = low-frequency crystal operation (XTS = 0, XT1DRIVEx = 0). CPUOFF = 1, SCG0 = 0, SCG1 = 0, OSCOFF = 0 (LPM0), f_{ACLK} = 32768 Hz, f_{MCLK} = 0 MHz, f_{SMCLK} = 8 MHz. DCORSEL = 0, DCOFSELx = 3 (f_{DCO} = 8 MHz)
(6) Current for watchdog timer clocked by SMCLK included. ACLK = low-frequency crystal operation (XTS = 0, XT1DRIVEx = 0). CPUOFF = 1, SCG0 = 0, SCG1 = 0, OSCOFF = 0 (LPM0), f_{ACLK} = 32768 Hz, f_{MCLK} = 0 MHz, f_{SMCLK} = 24 MHz. DCORSEL = 1, DCOFSELx = 3 (f_{DCO} = 24 MHz)
(7) Current for watchdog timer (clocked by ACLK) and RTC (clocked by XT1 LF mode) included. ACLK = low-frequency crystal operation (XTS = 0, XT1DRIVEx = 0).
CPUOFF = 1, SCG0 = 0, SCG1 = 1, OSCOFF = 0 (LPM2), f_{ACLK} = 32768 Hz, f_{MCLK} = 0 MHz, f_{SMCLK} = f_{DCO} = 0 MHz, DCORSEL = 0, DCOFSELx = 3, DCO bias generator enabled.
(8) Current for brownout, high-side supervisor (SVS_H) included. Low-side supervisor disabled (SVS_L).
(9) Current for watchdog timer (clocked by ACLK) and RTC (clocked by XT1 LF mode) included. ACLK = low-frequency crystal operation (XTS = 0, XT1DRIVEx = 0).
CPUOFF = 1, SCG0 = 1, SCG1 = 1, OSCOFF = 0 (LPM3), f_{ACLK} = 32768 Hz, f_{MCLK} = f_{SMCLK} = f_{DCO} = 0 MHz
(10) Current for watchdog timer (clocked by ACLK) included. ACLK = VLO.
CPUOFF = 1, SCG0 = 1, SCG1 = 1, OSCOFF = 0 (LPM3), f_{ACLK} = f_{VLO}, f_{MCLK} = f_{SMCLK} = f_{DCO} = 0 MHz
(11) CPUOFF = 1, SCG0 = 1, SCG1 = 1, OSCOFF = 1 (LPM4), f_{DCO} = f_{ACLK} = f_{MCLK} = f_{SMCLK} = 0 MHz
(12) Internal regulator disabled. No data retention. RTC active clocked by XT1 LF mode.
CPUOFF = 1, SCG0 = 1, SCG1 = 1, OSCOFF = 1, PMMREGOFF = 1 (LPM3.5), f_{DCO} = f_{ACLK} = f_{MCLK} = f_{SMCLK} = 0 MHz
(13) Internal regulator disabled. No data retention.
CPUOFF = 1, SCG0 = 1, SCG1 = 1, OSCOFF = 1, PMMREGOFF = 1 (LPM4.5), f_{DCO} = f_{ACLK} = f_{MCLK} = f_{SMCLK} = 0 MHz

Copyright © 2014, Texas Instruments Incorporated

4.6 Schmitt-Trigger Inputs – General Purpose I/O (P1.0 to P1.7, P2.0 to P2.7, P3.0 to P3.7, P4.0 to P4.1, PJ.0 to PJ.5, $\overline{RST}$/NMI)

over recommended ranges of supply voltage and operating free-air temperature (unless otherwise noted)

PARAMETER		TEST CONDITIONS	V_{CC}	MIN	TYP	MAX	UNIT
V_{IT+}	Positive-going input threshold voltage		2 V	0.7		1.7	V
			3 V	1.45		2.12	
V_{IT-}	Negative-going input threshold voltage		2 V	0.41		1.101	V
			3 V	0.72		1.68	
V_{hys}	Input voltage hysteresis ($V_{IT+} - V_{IT-}$)		2 V	0.24		0.855	V
			3 V	0.27		1.02	
R_{Pull}	Pullup or pulldown resistor	For pullup: $V_{IN} = V_{SS}$ For pulldown: $V_{IN} = V_{CC}$		19	35	51	kΩ
C_I	Input capacitance	$V_{IN} = V_{SS}$ or V_{CC}			5		pF

4.7 Inputs – Ports P1 and P2 (1) (P1.0 to P1.7, P2.0 to P2.7)

over recommended ranges of supply voltage and operating free-air temperature (unless otherwise noted)

PARAMETER		TEST CONDITIONS	V_{CC}	MIN	MAX	UNIT
$t_{(int)}$	External interrupt timing (2)	External trigger pulse duration to set interrupt flag	2 V, 3 V	20		ns

(1) Some devices may contain additional ports with interrupts. See the block diagram and terminal function descriptions.
(2) An external signal sets the interrupt flag every time the minimum interrupt pulse duration $t_{(int)}$ is met. It may be set by trigger signals shorter than $t_{(int)}$.

4.8 Leakage Current – General Purpose I/O (P1.0 to P1.7, P2.0 to P2.7, P3.0 to P3.7, P4.0 to P4.1, PJ.0 to PJ.5, $\overline{RST}$/NMI)

over recommended ranges of supply voltage and operating free-air temperature (unless otherwise noted)

PARAMETER		TEST CONDITIONS	V_{CC}	MIN	MAX	UNIT
$I_{lkg(Px.x)}$	High-impedance leakage current	(1) (2)	2 V, 3 V	–65	65	nA

(1) The leakage current is measured with V_{SS} or V_{CC} applied to the corresponding pin(s), unless otherwise noted.
(2) The leakage of the digital port pins is measured individually. The port pin is selected for input and the pullup/pulldown resistor is disabled.

Copyright © 2014, Texas Instruments Incorporated

4.9 Outputs – General Purpose I/O (P1.0 to P1.7, P2.0 to P2.7, P3.0 to P3.7, P4.0 to P4.1, PJ.0 to PJ.5)

over recommended ranges of supply voltage and operating free-air temperature (unless otherwise noted)

PARAMETER		TEST CONDITIONS	V_{CC}	MIN	MAX	UNIT
V_{OH}	High-level output voltage	$I_{(OHmax)}$ = –1 mA (1)	2 V	V_{CC} – 0.25	V_{CC}	V
		$I_{(OHmax)}$ = –3 mA (2)		V_{CC} – 0.60	V_{CC}	
		$I_{(OHmax)}$ = –2 mA (1)	3 V	V_{CC} – 0.25	V_{CC}	
		$I_{(OHmax)}$ = –6 mA (2)		V_{CC} – 0.60	V_{CC}	
V_{OL}	Low-level output voltage	$I_{(OLmax)}$ = 1 mA (1)	2 V	V_{SS}	V_{SS} + 0.25	V
		$I_{(OLmax)}$ = 3 mA (2)		V_{SS}	V_{SS} + 0.60	
		$I_{(OLmax)}$ = 2 mA (1)	3 V	V_{SS}	V_{SS} + 0.25	
		$I_{(OLmax)}$ = 6 mA (2)		V_{SS}	V_{SS} + 0.60	

(1) The maximum total current, $I_{(OHmax)}$ and $I_{(OLmax)}$, for all outputs combined, should not exceed ±48 mA to hold the maximum voltage drop specified.
(2) The maximum total current, $I_{(OHmax)}$ and $I_{(OLmax)}$, for all outputs combined, should not exceed ±100 mA to hold the maximum voltage drop specified.

4.10 Output Frequency – General Purpose I/O (P1.0 to P1.7, P2.0 to P2.7, P3.0 to P3.7, P4.0 to P4.1, PJ.0 to PJ.5)

over recommended ranges of supply voltage and operating free-air temperature (unless otherwise noted)

PARAMETER		TEST CONDITIONS	V_{CC}	MIN	MAX	UNIT
$f_{Px.y}$	Port output frequency (with load)	Px.y (1) (2)	2 V		16	MHz
			3 V		24	
f_{Port_CLK}	Clock output frequency	ACLK, SMCLK, or MCLK at configured output port, C_L = 20 pF, no DC loading (2)	2 V		16	MHz
			3 V		24	

(1) A resistive divider with 2 × 1.6 kΩ between V_{CC} and V_{SS} is used as load. The output is connected to the center tap of the divider. C_L = 20 pF is connected from the output to V_{SS}.
(2) The output voltage reaches at least 10% and 90% V_{CC} at the specified toggle frequency.

Copyright © 2014, Texas Instruments Incorporated

4.11 Typical Characteristics – Outputs

over recommended ranges of supply voltage and operating free-air temperature (unless otherwise noted)

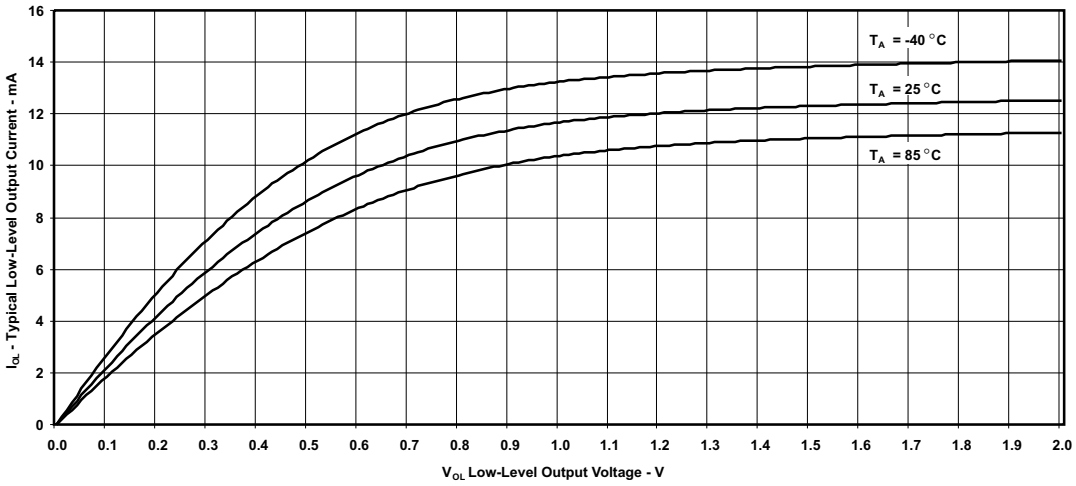

V_{CC} = 2.0 V Measured at Px.y

Figure 4-2. Typical Low-Level Output Current vs Low-Level Output Voltage

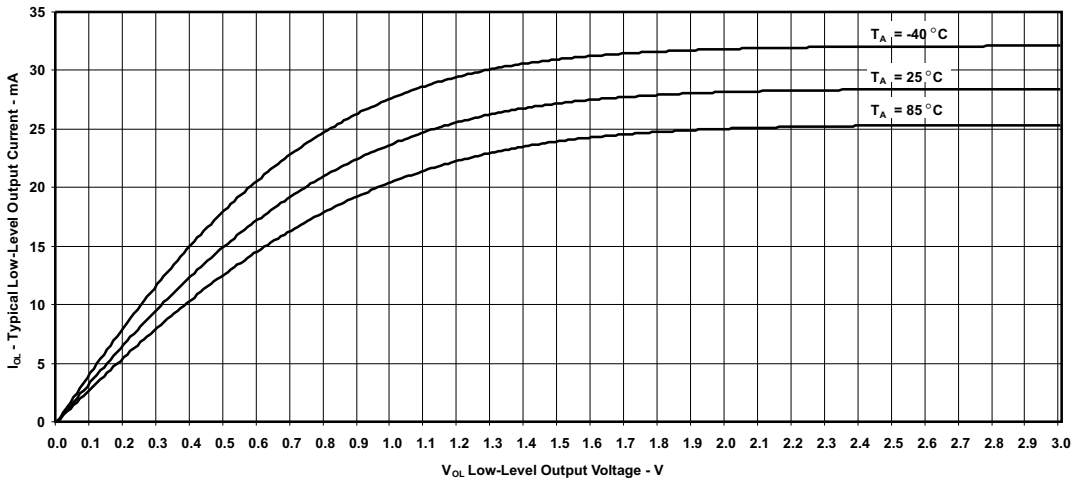

V_{CC} = 3.0 V Measured at Px.y

Figure 4-3. Typical Low-Level Output Current vs Low-Level Output Voltage

Copyright © 2014, Texas Instruments Incorporated

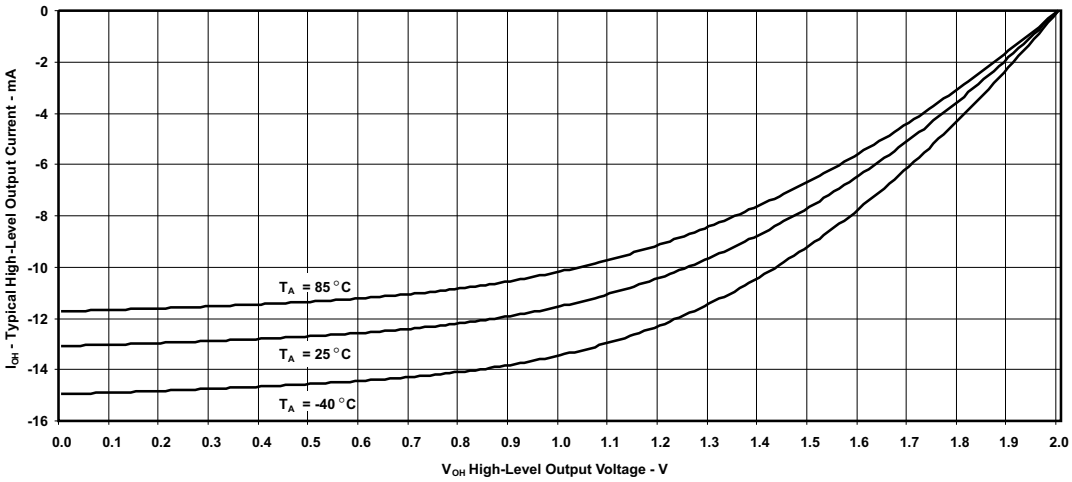

V_{CC} = 2.0 V Measured at Px.y

Figure 4-4. Typical High-Level Output Current vs High-Level Output Voltage

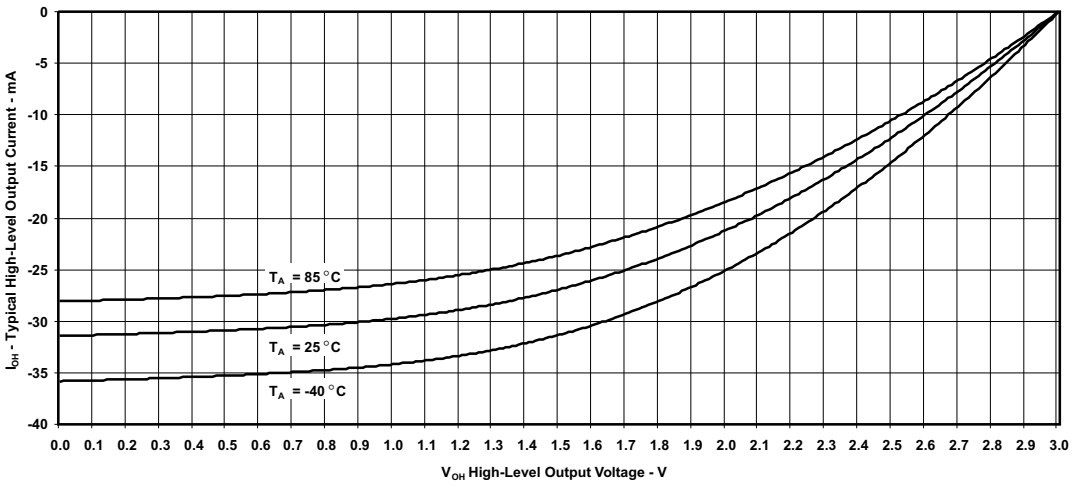

V_{CC} = 3.0 V Measured at Px.y

Figure 4-5. Typical High-Level Output Current vs High-Level Output Voltage

4.12 Crystal Oscillator, XT1, Low-Frequency (LF) Mode(1)

over recommended ranges of supply voltage and operating free-air temperature (unless otherwise noted)(2)

PARAMETER		TEST CONDITIONS	V_{CC}	MIN	TYP	MAX	UNIT
$\Delta I_{VCC.LF}$	Additional current consumption XT1 LF mode from lowest drive setting	f_{OSC} = 32768 Hz, XTS = 0, XT1BYPASS = 0, XT1DRIVE = {1}, $C_{L,eff}$ = 9 pF, T_A = 25°C,	3 V		60		nA
		f_{OSC} = 32768 Hz, XTS = 0, XT1BYPASS = 0, XT1DRIVE = {2}, T_A = 25°C, $C_{L,eff}$ = 9 pF	3 V		90		
		f_{OSC} = 32768 Hz, XTS = 0, XT1BYPASS = 0, XT1DRIVE = {3}, T_A = 25°C, $C_{L,eff}$ = 12 pF	3 V		140		
$f_{XT1,LF0}$	XT1 oscillator crystal frequency, LF mode	XTS = 0, XT1BYPASS = 0			32768		Hz
$f_{XT1,LF,SW}$	XT1 oscillator logic-level square-wave input frequency, LF mode	XTS = 0, XT1BYPASS = 1 (3) (4)		10	32.768	50	kHz
OA_{LF}	Oscillation allowance for LF crystals (5)	XTS = 0, XT1BYPASS = 0, XT1DRIVE = {0}, $f_{XT1,LF}$ = 32768 Hz, $C_{L,eff}$ = 6 pF			210		kΩ
		XTS = 0, XT1BYPASS = 0, XT1DRIVE = {3}, $f_{XT1,LF}$ = 32768 Hz, $C_{L,eff}$ = 12 pF			300		
	Duty cycle, LF mode	XTS = 0, Measured at ACLK, $f_{XT1,LF}$ = 32768 Hz		30		70	%
$f_{Fault,LF}$	Oscillator fault frequency, LF mode (6)	XTS = 0 (7)		10		10000	Hz
$t_{START,LF}$	Startup time, LF mode (8)	f_{OSC} = 32768 Hz, XTS = 0, XT1BYPASS = 0, XT1DRIVE = {0}, T_A = 25°C, $C_{L,eff}$ = 6 pF	3 V		1000		ms
		f_{OSC} = 32768 Hz, XTS = 0, XT1BYPASS = 0, XT1DRIVE = {3}, T_A = 25°C, $C_{L,eff}$ = 12 pF			1000		
$C_{L,eff}$	Integrated effective load capacitance, LF mode (9) (10)	XTS = 0			1		pF

(1) To improve EMI on the XT1 oscillator, the following guidelines should be observed.
- Keep the trace between the device and the crystal as short as possible.
- Design a good ground plane around the oscillator pins.
- Prevent crosstalk from other clock or data lines into oscillator pins XIN and XOUT.
- Avoid running PCB traces underneath or adjacent to the XIN and XOUT pins.
- Use assembly materials and processes that avoid any parasitic load on the oscillator XIN and XOUT pins.
- If conformal coating is used, ensure that it does not induce capacitive or resistive leakage between the oscillator pins.

(2) –40°C to 85°C

(3) When XT1BYPASS is set, XT1 circuits are automatically powered down. Input signal is a digital square wave with parametrics defined in the Schmitt-trigger Inputs section of this data sheet.

(4) Maximum frequency of operation of the entire device cannot be exceeded.

(5) Oscillation allowance is based on a safety factor of 5 for recommended crystals. The oscillation allowance is a function of the XT1DRIVE settings and the effective load. In general, comparable oscillator allowance can be achieved based on the following guidelines, but should be evaluated based on the actual crystal selected for the application:
- For XT1DRIVE = {0}, $C_{L,eff} \le 6$ pF.
- For XT1DRIVE = {1}, 6 pF $\le C_{L,eff} \le$ 9 pF.
- For XT1DRIVE = {2}, 6 pF $\le C_{L,eff} \le$ 10 pF.
- For XT1DRIVE = {3}, 6 pF $\le C_{L,eff} \le$ 12 pF.

(6) Frequencies below the MIN specification set the fault flag. Frequencies above the MAX specification do not set the fault flag. Frequencies in between might set the flag.

(7) Measured with logic-level input frequency but also applies to operation with crystals.

(8) Includes startup counter of 4096 clock cycles.

(9) Requires external capacitors at both terminals.

(10) Values are specified by crystal manufacturers. Include parasitic bond and package capacitance (approximately 2 pF per pin). Recommended values supported are 6 pF, 9 pF, and 12 pF. Maximum shunt capacitance of 1.6 pF.

Copyright © 2014, Texas Instruments Incorporated

4.13 Crystal Oscillator, XT1, High-Frequency (HF) Mode(1)

over recommended ranges of supply voltage and operating free-air temperature (unless otherwise noted)(2)

PARAMETER		TEST CONDITIONS	V_{CC}	MIN	TYP	MAX	UNIT
$I_{VCC,HF}$	XT1 oscillator crystal current HF mode	f_{OSC} = 4 MHz, XTS = 1, XOSCOFF = 0, XT1BYPASS = 0, XT1DRIVE = {0}, T_A = 25°C, $C_{L,eff}$ = 16 pF	3 V		175		µA
		f_{OSC} = 8 MHz, XTS = 1, XOSCOFF = 0, XT1BYPASS = 0, XT1DRIVE = {1}, T_A = 25°C, $C_{L,eff}$ = 16 pF			300		
		f_{OSC} = 16 MHz, XTS = 1, XOSCOFF = 0, XT1BYPASS = 0, XT1DRIVE = {2}, T_A = 25°C, $C_{L,eff}$ = 16 pF			350		
		f_{OSC} = 24 MHz, XTS = 1, XOSCOFF = 0, XT1BYPASS = 0, XT1DRIVE = {3}, T_A = 25°C, $C_{L,eff}$ = 16 pF			550		
$f_{XT1,HF0}$	XT1 oscillator crystal frequency, HF mode 0	XTS = 1, XT1BYPASS = 0, XT1DRIVE = {0} (3)		4		6	MHz
$f_{XT1,HF1}$	XT1 oscillator crystal frequency, HF mode 1	XTS = 1, XT1BYPASS = 0, XT1DRIVE = {1} (3)		6		10	MHz
$f_{XT1,HF2}$	XT1 oscillator crystal frequency, HF mode 2	XTS = 1, XT1BYPASS = 0, XT1DRIVE = {2} (3)		10		16	MHz
$f_{XT1,HF3}$	XT1 oscillator crystal frequency, HF mode 3	XTS = 1, XT1BYPASS = 0, XT1DRIVE = {3} (3)		16		24	MHz
$f_{XT1,HF,SW}$	XT1 oscillator logic-level square-wave input frequency, HF mode	XTS = 1, XT1BYPASS = 1 (4) (3)		1		24	MHz
OA_{HF}	Oscillation allowance for HF crystals (5)	XTS = 1, XT1BYPASS = 0, XT1DRIVE = {0}, $f_{XT1,HF}$ = 4 MHz, $C_{L,eff}$ = 16 pF			450		Ω
		XTS = 1, XT1BYPASS = 0, XT1DRIVE = {1}, $f_{XT1,HF}$ = 8 MHz, $C_{L,eff}$ = 16 pF			320		
		XTS = 1, XT1BYPASS = 0, XT1DRIVE = {2}, $f_{XT1,HF}$ = 16 MHz, $C_{L,eff}$ = 16 pF			200		
		XTS = 1, XT1BYPASS = 0, XT1DRIVE = {3}, $f_{XT1,HF}$ = 24 MHz, $C_{L,eff}$ = 16 pF			200		
$t_{START,HF}$	Startup time, HF mode (6)	f_{OSC} = 4 MHz, XTS = 1, XT1BYPASS = 0, XT1DRIVE = {0}, T_A = 25°C, $C_{L,eff}$ = 16 pF	3 V		8		ms
		f_{OSC} = 24 MHz, XTS = 1, XT1BYPASS = 0, XT1DRIVE = {3}, T_A = 25°C, $C_{L,eff}$ = 16 pF			2		

(1) To improve EMI on the XT1 oscillator the following guidelines should be observed.
- Keep the traces between the device and the crystal as short as possible.
- Design a good ground plane around the oscillator pins.
- Prevent crosstalk from other clock or data lines into oscillator pins XIN and XOUT.
- Avoid running PCB traces underneath or adjacent to the XIN and XOUT pins.
- Use assembly materials and processes that avoid any parasitic load on the oscillator XIN and XOUT pins.
- If conformal coating is used, ensure that it does not induce capacitive or resistive leakage between the oscillator pins.

(2) –40°C to 85°C
(3) Maximum frequency of operation of the entire device cannot be exceeded.
(4) When XT1BYPASS is set, XT1 circuits are automatically powered down. Input signal is a digital square wave with parametrics defined in the Schmitt-trigger Inputs section of this data sheet.
(5) Oscillation allowance is based on a safety factor of 5 for recommended crystals.
(6) Includes startup counter of 4096 clock cycles.

Copyright © 2014, Texas Instruments Incorporated

Crystal Oscillator, XT1, High-Frequency (HF) Mode[1] *(continued)*

over recommended ranges of supply voltage and operating free-air temperature (unless otherwise noted)[2]

PARAMETER		TEST CONDITIONS	V_{CC}	MIN	TYP	MAX	UNIT
$C_{L,eff}$	Integrated effective load capacitance (7) (8)	XTS = 1			1		pF
	Duty cycle, HF mode	XTS = 1, Measured at ACLK, $f_{XT1,HF2}$ = 24 MHz		40	50	60	%
$f_{Fault,HF}$	Oscillator fault frequency, HF mode (9)	XTS = 1 (10)		145		900	kHz

(7) Includes parasitic bond and package capacitance (approximately 2 pF per pin). Because the PCB adds additional capacitance, it is recommended to verify the correct load by measuring the ACLK frequency. For a correct setup, the effective load capacitance should always match the specification of the used crystal.
(8) Requires external capacitors at both terminals. Values are specified by crystal manufacturers. Recommended values supported are 14 pF, 16 pF, and 18 pF. Maximum shunt capacitance of 7 pF.
(9) Frequencies below the MIN specification set the fault flag. Frequencies above the MAX specification do not set the fault flag. Frequencies in between might set the flag.
(10) Measured with logic-level input frequency but also applies to operation with crystals.

4.14 Internal Very-Low-Power Low-Frequency Oscillator (VLO)

over recommended ranges of supply voltage and operating free-air temperature (unless otherwise noted)

PARAMETER		TEST CONDITIONS	V_{CC}	MIN	TYP	MAX	UNIT
f_{VLO}	VLO frequency	Measured at ACLK	2 V to 3.6 V	4.3	8.3	13.3	kHz
df_{VLO}/d_T	VLO frequency temperature drift	Measured at ACLK (1)	2 V to 3.6 V		0.5		%/°C
df_{VLO}/dV_C	VLO frequency supply voltage drift	Measured at ACLK (2)	2 V to 3.6 V		4		%/V
$f_{VLO,DC}$	Duty cycle	Measured at ACLK	2 V to 3.6 V	35%	50%	65%	

(1) Calculated using the box method: (MAX(–55 to 85°C) – MIN(–55 to 85°C)) / MIN(–55 to 85°C) / (85°C – (–55°C))
(2) Calculated using the box method: (MAX(2.0 to 3.6 V) – MIN(2.0 to 3.6 V)) / MIN(2.0 to 3.6 V) / (3.6 V – 2 V)

Copyright © 2014, Texas Instruments Incorporated

4.15 DCO Frequencies

over recommended ranges of supply voltage and operating free-air temperature (unless otherwise noted)

PARAMETER		TEST CONDITIONS	V_{CC} T_A	MIN	TYP	MAX	UNIT
$f_{DCO,LO}$	DCO frequency low, trimmed	Measured at ACLK, DCORSEL = 0	2 V to 3.6 V –55°C to 85°C		5.37	±5%	MHz
		Measured at ACLK, DCORSEL = 1	2 V to 3.6 V –55°C to 85°C		16.2	±5%	MHz
$f_{DCO,MID}$	DCO frequency mid, trimmed	Measured at ACLK, DCORSEL = 0	2 V to 3.6 V –55°C to 85°C		6.67	±5%	MHz
		Measured at ACLK, DCORSEL = 1	2 V to 3.6 V –55°C to 85°C		20	±5%	MHz
$f_{DCO,HI}$	DCO frequency high, trimmed	Measured at ACLK, DCORSEL = 0	2 V to 3.6 V –55°C to 85°C		8	±5%	MHz
		Measured at ACLK, DCORSEL = 1	2 V to 3.6 V –55°C to 85°C		23.8	±5%	MHz
$f_{DCO,DC}$	Duty cycle	Measured at ACLK, divide by 1, No external divide, all DCO settings	2 V to 3.6 V –55°C to 85°C	35%	50%	65%	

4.16 MODOSC

over operating free-air temperature range (unless otherwise noted)

PARAMETER		TEST CONDITIONS	V_{CC}	MIN	TYP	MAX	UNIT
I_{MODOSC}	Current consumption	Enabled	2 V to 3.6 V		44		µA
f_{MODOSC}	MODOSC frequency		2 V to 3.6 V	4.2	5.0	5.7	MHz
$f_{MODOSC,DC}$	Duty cycle	Measured at ACLK, divide by 1	2 V to 3.6 V	35%	50%	65%	

Copyright © 2014, Texas Instruments Incorporated

4.17 PMM, Core Voltage

over recommended ranges of supply voltage and operating free-air temperature (unless otherwise noted)

PARAMETER		TEST CONDITIONS	MIN	TYP	MAX	UNIT
V_{CORE}(AM)	Core voltage, active mode	2 V ≤ DV_{CC} ≤ 3.6 V		1.5		V
V_{CORE}(LPM)	Core voltage, low-current mode	2 V ≤ DV_{CC} ≤ 3.6 V		1.5		V

4.18 PMM, SVS, BOR

over recommended ranges of supply voltage and operating free-air temperature (unless otherwise noted)

PARAMETER		TEST CONDITIONS	MIN	TYP	MAX	UNIT
$I_{SVSH,AM}$	SVS_H current consumption, active mode	V_{CC} = 3.6 V		5		µA
$I_{SVSH,LPM}$	SVS_H current consumption, low power modes	V_{CC} = 3.6 V		0.8		µA
V_{SVSH-}	SVS_H on voltage level, falling supply voltage		1.81	1.88	1.95	V
V_{SVSH+}	SVS_H off voltage level, rising supply voltage		1.85	1.93	2	V
$t_{PD,SVSH,\ AM}$	SVS_H propagation delay, active mode	dV_{CC}/dt = 10 mV/µs		10		µs
$t_{PD,SVSH,\ LPM}$	SVS_H propagation delay, low power modes	dV_{CC}/dt = 1 mV/µs		30		µs
I_{SVSL}	SVS_L current consumption			0.3		µA
$V_{SVSL–}$	SVS_L on voltage level			1.42		V
V_{SVSL+}	SVS_L off voltage level			1.47		V

4.19 Wake-Up from Low Power Modes

over recommended ranges of supply voltage and operating free-air temperature (unless otherwise noted)

PARAMETER		TEST CONDITIONS	V_{CC} T_A	MIN	TYP	MAX	UNIT
$t_{WAKE-UP\ LPM0}$	Wake-up time from LPM0 to active mode (1)		2 V, 3 V –55°C to 85°C		0.58	1.1	µs
$t_{WAKE-UP\ LPM12}$	Wake-up time from LPM1, LPM2 to active mode (1)		2 V, 3 V –55°C to 85°C		12	25	µs
$t_{WAKE-UP\ LPM34}$	Wake-up time from LPM3 or LPM4 to active mode (1)		2 V, 3 V –55°C to 85°C		78	165	µs
$t_{WAKE-UP\ LPMx.5}$	Wake-up time from LPM3.5 or LPM4.5 to active mode (1)		2 V, 3 V 0°C to 85°C		310	575	µs
			2 V, 3 V –55°C to 85°C		310	1100	µs
$t_{WAKE-UP\ RESET}$	Wake-up time from $\overline{RST}$ to active mode (2)	V_{CC} stable	2 V, 3 V –55°C to 85°C		230		µs
$t_{WAKE-UP\ BOR}$	Wake-up time from BOR or power-up to active mode	dV_{CC}/dt = 2400 V/s	2 V, 3 V –55°C to 85°C		1.6		ms
t_{RESET}	Pulse duration required at $\overline{RST}$/NMI terminal to accept a reset event (3)		2 V, 3 V –55°C to 85°C	4			ns

(1) The wake-up time is measured from the edge of an external wake-up signal (for example, port interrupt or wake-up event) until the first instruction of the user program is executed.
(2) The wake-up time is measured from the rising edge of the $\overline{RST}$ signal until the first instruction of the user program is executed.
(3) Meeting or exceeding this time makes sures a reset event occurs. Pulses shorter than this minimum time may or may not cause a reset event to occur.

Copyright © 2014, Texas Instruments Incorporated

4.20 Timer_A

over recommended ranges of supply voltage and operating free-air temperature (unless otherwise noted)

PARAMETER		TEST CONDITIONS	V_{CC}	MIN	TYP	MAX	UNIT
f_{TA}	Timer_A input clock frequency	Internal: SMCLK, ACLK External: TACLK Duty cycle = 50% ± 10%	2 V, 3 V			24	MHz
$t_{TA,cap}$	Timer_A capture timing	All capture inputs, Minimum pulse duration required for capture	2 V, 3 V	20			ns

4.21 Timer_B

over recommended ranges of supply voltage and operating free-air temperature (unless otherwise noted)

PARAMETER		TEST CONDITIONS	V_{CC}	MIN	TYP	MAX	UNIT
f_{TB}	Timer_B input clock frequency	Internal: SMCLK, ACLK External: TBCLK Duty cycle = 50% ± 10%	2 V, 3 V			24	MHz
$t_{TB,cap}$	Timer_B capture timing	All capture inputs, Minimum pulse duration required for capture	2 V, 3 V	20			ns

4.22 eUSCI (UART Mode) Recommended Operating Conditions

PARAMETER		CONDITIONS	V_{CC}	MIN	TYP	MAX	UNIT
f_{eUSCI}	eUSCI input clock frequency	Internal: SMCLK, ACLK External: UCLK Duty cycle = 50% ± 10%				f_{SYSTEM}	MHz
f_{BITCLK}	BITCLK clock frequency (equals baud rate in MBaud)					5	MHz

4.23 eUSCI (UART Mode)

over recommended ranges of supply voltage and operating free-air temperature (unless otherwise noted)

PARAMETER		TEST CONDITIONS	V_{CC}	MIN	TYP	MAX	UNIT
t_t	UART receive deglitch time[1]	UCGLITx = 0	2 V, 3 V	5	15	20	ns
		UCGLITx = 1		20	45	60	
		UCGLITx = 2		35	80	120	
		UCGLITx = 3		50	110	180	

(1) Pulses on the UART receive input (UCxRX) shorter than the UART receive deglitch time are suppressed. To ensure that pulses are correctly recognized, their duration should exceed the maximum specification of the deglitch time.

Copyright © 2014, Texas Instruments Incorporated

4.24 eUSCI (SPI Master Mode) Recommended Operating Conditions

PARAMETER	CONDITIONS	V_{CC}	MIN	TYP	MAX	UNIT
f_{eUSCI} eUSCI input clock frequency	Internal: SMCLK, ACLK Duty cycle = 50% ± 10%				f_{SYSTEM}	MHz

4.25 eUSCI (SPI Master Mode)

over recommended ranges of supply voltage and operating free-air temperature (unless otherwise noted) (1)

PARAMETER		TEST CONDITIONS	V_{CC}	MIN	TYP	MAX	UNIT
$t_{STE,LEAD}$	STE lead time, STE active to clock	UCSTEM = 0, UCMODEx = 01 or 10	2 V, 3 V	1			UCxCLK cycles
		UCSTEM = 1, UCMODEx = 01 or 10	2 V, 3 V	1			
$t_{STE,LAG}$	STE lag time, Last clock to STE inactive	UCSTEM = 0, UCMODEx = 01 or 10	2 V, 3 V	1			UCxCLK cycles
		UCSTEM = 1, UCMODEx = 01 or 10	2 V, 3 V	1			
$t_{STE,ACC}$	STE access time, STE active to SIMO data out	UCSTEM = 0, UCMODEx = 01 or 10	2 V, 3 V			55	ns
		UCSTEM = 1, UCMODEx = 01 or 10	2 V, 3 V			35	
$t_{STE,DIS}$	STE disable time, STE inactive to SIMO high impedance	UCSTEM = 0, UCMODEx = 01 or 10	2 V, 3 V			40	ns
		UCSTEM = 1, UCMODEx = 01 or 10	2 V, 3 V			30	
$t_{SU,MI}$	SOMI input data setup time		2 V	35			ns
			3 V	35			
$t_{HD,MI}$	SOMI input data hold time		2 V	0			ns
			3 V	0			
$t_{VALID,MO}$	SIMO output data valid time (2)	UCLK edge to SIMO valid, C_L = 20 pF	2 V			30	ns
			3 V			30	
$t_{HD,MO}$	SIMO output data hold time (3)	C_L = 20 pF	2 V	0			ns
			3 V	0			

(1) $f_{UCxCLK} = 1/2t_{LO/HI}$ with $t_{LO/HI} = \max(t_{VALID,MO(eUSCI)} + t_{SU,SI(Slave)}, t_{SU,MI(eUSCI)} + t_{VALID,SO(Slave)})$.
For the slave's parameters $t_{SU,SI(Slave)}$ and $t_{VALID,SO(Slave)}$ see the SPI parameters of the attached slave.

(2) Specifies the time to drive the next valid data to the SIMO output after the output changing UCLK clock edge. See the timing diagrams in Figure 4-6 and Figure 4-7.

(3) Specifies how long data on the SIMO output is valid after the output changing UCLK clock edge. Negative values indicate that the data on the SIMO output can become invalid before the output changing clock edge observed on UCLK. See the timing diagrams in Figure 4-6 and Figure 4-7.

Copyright © 2014, Texas Instruments Incorporated

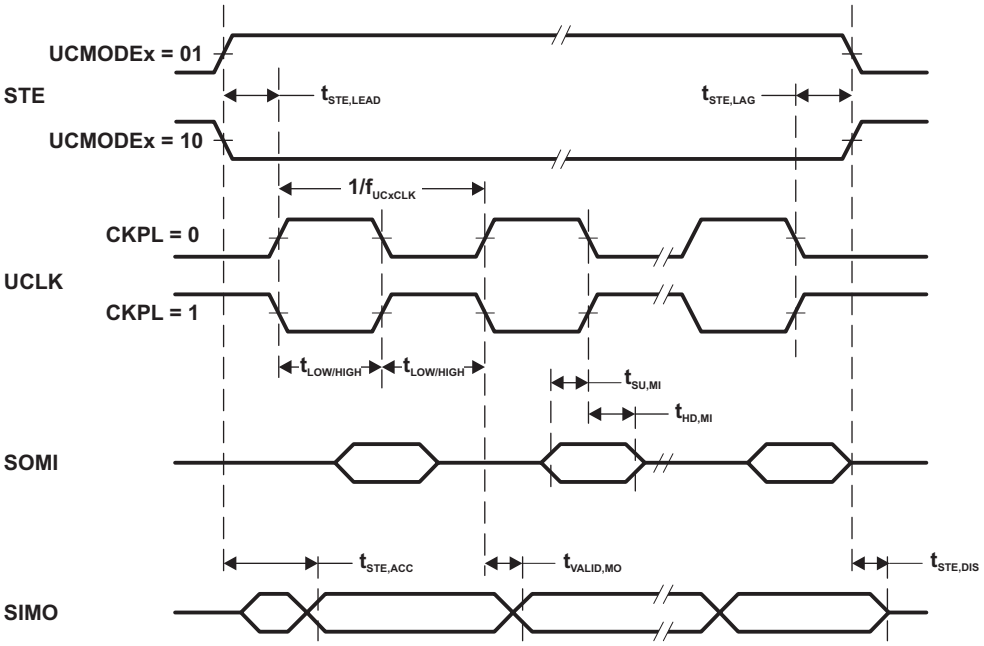

Figure 4-6. SPI Master Mode, CKPH = 0

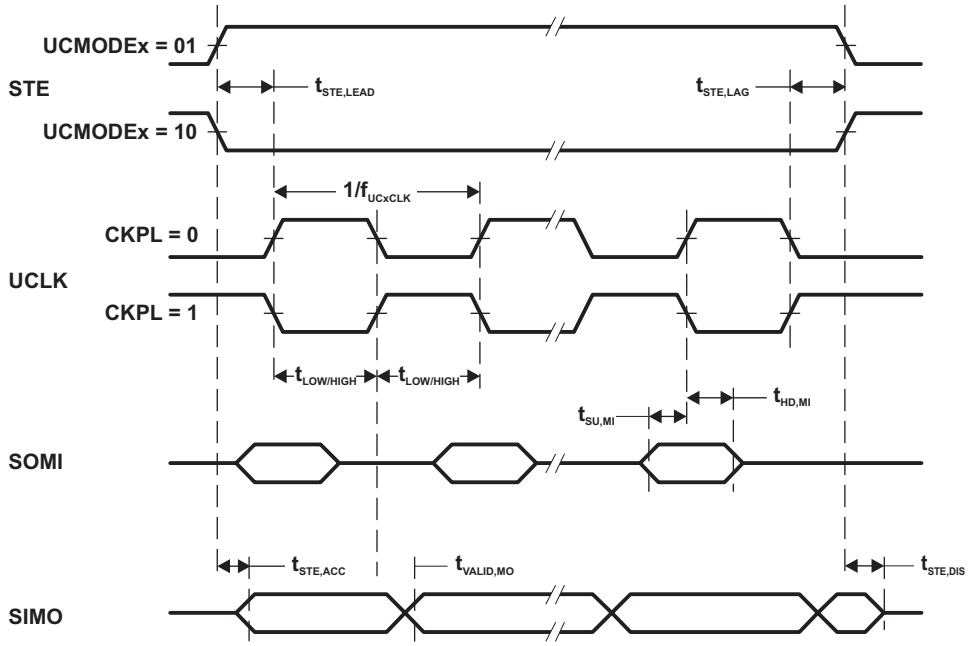

Figure 4-7. SPI Master Mode, CKPH = 1

4.26 eUSCI (SPI Slave Mode)

over recommended ranges of supply voltage and operating free-air temperature (unless otherwise noted) (1)

PARAMETER		TEST CONDITIONS	V_{CC}	MIN	TYP	MAX	UNIT
$t_{STE,LEAD}$	STE lead time, STE active to clock		2 V	7			ns
			3 V	7			
$t_{STE,LAG}$	STE lag time, Last clock to STE inactive		2 V	0			ns
			3 V	0			
$t_{STE,ACC}$	STE access time, STE active to SOMI data out		2 V			65	ns
			3 V			40	
$t_{STE,DIS}$	STE disable time, STE inactive to SOMI high impedance		2 V			40	ns
			3 V			35	
$t_{SU,SI}$	SIMO input data setup time		2 V	2			ns
			3 V	2			
$t_{HD,SI}$	SIMO input data hold time		2 V	5			ns
			3 V	5			
$t_{VALID,SO}$	SOMI output data valid time (2)	UCLK edge to SOMI valid, C_L = 20 pF	2 V			30	ns
			3 V			30	
$t_{HD,SO}$	SOMI output data hold time (3)	C_L = 20 pF	2 V	4			ns
			3 V	4			

(1) $f_{UCxCLK} = 1/2t_{LO/HI}$ with $t_{LO/HI} \geq \max(t_{VALID,MO(Master)} + t_{SU,SI(eUSCI)}, t_{SU,MI(Master)} + t_{VALID,SO(eUSCI)})$.
For the master's parameters $t_{SU,MI(Master)}$ and $t_{VALID,MO(Master)}$ see the SPI parameters of the attached slave.
(2) Specifies the time to drive the next valid data to the SOMI output after the output changing UCLK clock edge. See the timing diagrams in Figure 4-8 and Figure 4-9.
(3) Specifies how long data on the SOMI output is valid after the output changing UCLK clock edge. See the timing diagrams in Figure 4-8 and Figure 4-9.

Copyright © 2014, Texas Instruments Incorporated

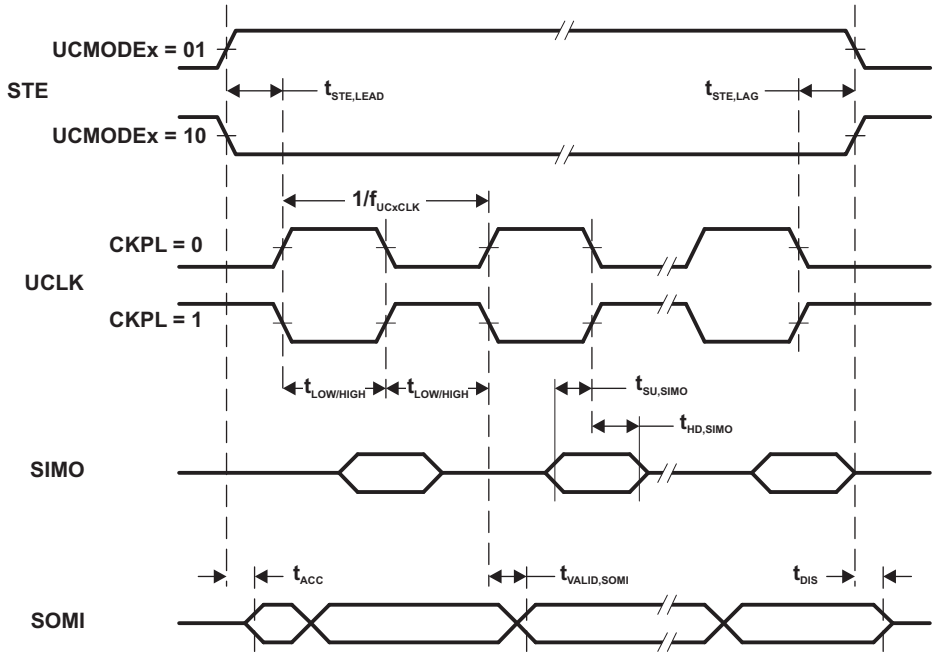

Figure 4-8. SPI Slave Mode, CKPH = 0

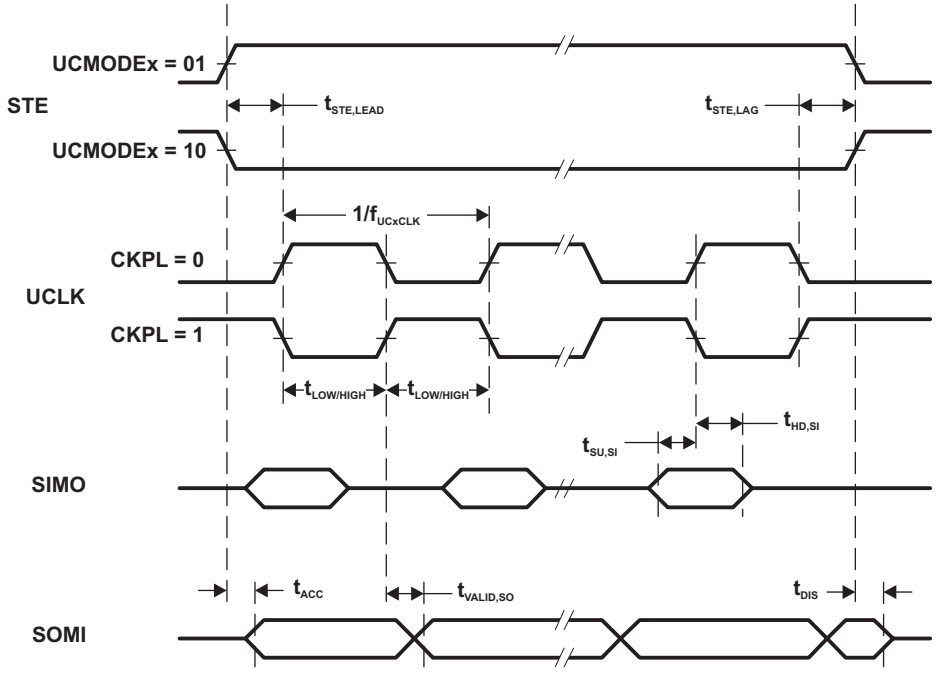

Figure 4-9. SPI Slave Mode, CKPH = 1

4.27 eUSCI (I²C Mode)

over recommended ranges of supply voltage and operating free-air temperature (unless otherwise noted) (see Figure 4-10)

PARAMETER		TEST CONDITIONS	V_{CC}	MIN	TYP	MAX	UNIT
f_{eUSCI}	eUSCI input clock frequency	Internal: SMCLK, ACLK External: UCLK Duty cycle = 50% ±10%				f_{SYSTEM}	MHz
f_{SCL}	SCL clock frequency		2 V, 3 V	0		400	kHz
$t_{HD,STA}$	Hold time (repeated) START	f_{SCL} = 100 kHz	2 V, 3 V	4.0			µs
		f_{SCL} > 100 kHz		0.6			
$t_{SU,STA}$	Setup time for a repeated START	f_{SCL} = 100 kHz	2 V, 3 V	4.7			µs
		f_{SCL} > 100 kHz		0.6			
$t_{HD,DAT}$	Data hold time		2 V, 3 V	0			ns
$t_{SU,DAT}$	Data setup time		2 V, 3 V	250			ns
$t_{SU,STO}$	Setup time for STOP	f_{SCL} = 100 kHz	2 V, 3 V	4.0			µs
		f_{SCL} > 100 kHz		0.6			
t_{SP}	Pulse duration of spikes suppressed by input filter	UCGLITx = 0	2 V, 3 V	50		600	ns
		UCGLITx = 1		25		300	ns
		UCGLITx = 2		12.5		150	ns
		UCGLITx = 3		6.25		75	ns
$t_{TIMEOUT}$	Clock low timeout	UCCLTOx = 1	2 V, 3 V		27		ms
		UCCLTOx = 2			30		ms
		UCCLTOx = 3			33		ms

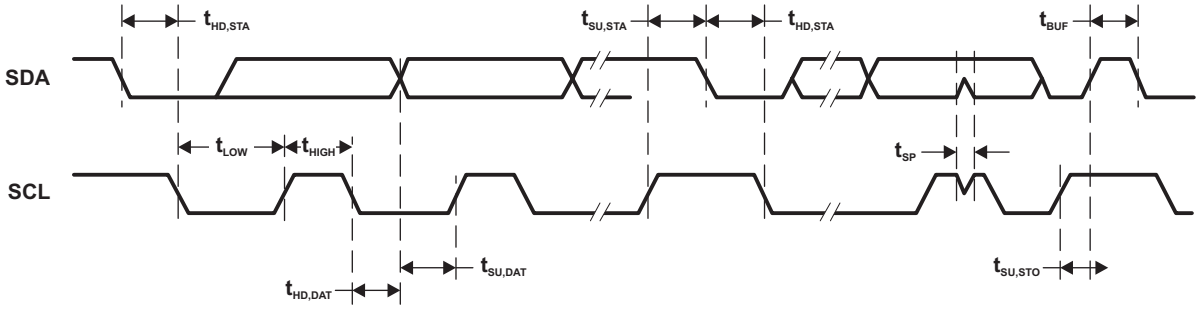

Figure 4-10. I²C Mode Timing

Copyright © 2014, Texas Instruments Incorporated

4.28 10-Bit ADC, Power Supply and Input Range Conditions

over operating free-air temperature range (unless otherwise noted)

PARAMETER		TEST CONDITIONS	V_{CC}	MIN	TYP	MAX	UNIT
AV_{CC}	Analog supply voltage	AV_{CC} and DV_{CC} are connected together, AV_{SS} and DV_{SS} are connected together, $V_{(AVSS)} = V_{(DVSS)} = 0$ V		2.0		3.6	V
$V_{(Ax)}$	Analog input voltage range	All ADC10 pins		0		AV_{CC}	V
I_{ADC10_A}	Operating supply current into AVCC terminal, reference current not included	$f_{ADC10CLK}$ = 5 MHz, ADC10ON = 1, REFON = 0, SHT0 = 0, SHT1 = 0, ADC10DIV = 0	2 V		90	150	µA
			3 V		100	170	
C_I	Input capacitance	Only one terminal Ax can be selected at one time from the pad to the ADC10_A capacitor array including wiring and pad	2.2 V		6		pF
R_I	Input MUX ON resistance	$AV_{CC} \geq 2$ V, $0 V \leq V_{Ax} \leq AV_{CC}$				36	kΩ

4.29 10-Bit ADC, Timing Parameters

over operating free-air temperature range (unless otherwise noted)

PARAMETER		TEST CONDITIONS	V_{CC}	MIN	TYP	MAX	UNIT
$f_{ADC10CLK}$		For specified performance of ADC10 linearity parameters	2 V to 3.6 V	0.45	5	5.5	MHz
$f_{ADC10OSC}$	Internal ADC10 oscillator (MODOSC)	ADC10DIV = 0, $f_{ADC10CLK} = f_{ADC10OSC}$	2 V to 3.6 V	4.2	4.5	5.7	MHz
$t_{CONVERT}$	Conversion time	REFON = 0, Internal oscillator, 12 ADC10CLK cycles, 10-bit mode, $f_{ADC10OSC}$ = 4.5 MHz to 5.5 MHz	2 V to 3.6 V	2.18		2.67	µs
		External $f_{ADC10CLK}$ from ACLK, MCLK, or SMCLK, ADC10SSEL ≠ 0	2 V to 3.6 V		(1)		
$t_{ADC10ON}$	Turn on settling time of the ADC	The error in a conversion started after $t_{ADC10ON}$ is less than ±0.5 LSB, Reference and input signal already settled				100	ns
t_{Sample}	Sampling time	R_S = 1000 Ω, R_I = 36000 Ω, C_I = 3.5 pF, Approximately eight Tau (τ) are required to get an error of less than ±0.5 LSB	2 V	1.5			µs
			3 V	2.0			

(1) $12 \times ADC10DIV \times 1/f_{ADC10CLK}$

4.30 10-Bit ADC, Linearity Parameters

over operating free-air temperature range (unless otherwise noted)

PARAMETER		TEST CONDITIONS	V_{CC}	MIN	TYP	MAX	UNIT
E_I	Integral linearity error	$1.4 V \leq (V_{eREF+} - V_{REF-}/V_{eREF-})min \leq 1.6$ V	3.6 V	–1.4		1.4	LSB
		$1.6 V < (V_{eREF+} - V_{REF-}/V_{eREF-})min \leq V_{AVCC}$		–1.3		1.3	
E_D	Differential linearity error	$(V_{eREF+} - V_{REF-}/V_{eREF-})min \leq (V_{eREF+} - V_{REF-}/V_{eREF-})$	3.6 V	–1.2		1.2	LSB
E_O	Offset error	$(V_{eREF+} - V_{REF-}/V_{eREF-})min \leq (V_{eREF+} - V_{REF-}/V_{eREF-})$	3.6 V		±2.5		mV
E_G	Gain error, external reference	$(V_{eREF+} - V_{REF-}/V_{eREF-})min \leq (V_{eREF+} - V_{REF-}/V_{eREF-})$	3.6 V	–1.4		1.4	LSB
	Gain error, internal reference (1)				±4		
E_T	Total unadjusted error, external reference	$(V_{eREF+} - V_{REF-}/V_{eREF-})min \leq (V_{eREF+} - V_{REF-}/V_{eREF-})$	3.6 V		±2.3		LSB
	Total unadjusted error, internal reference (1)				±4		

(1) Error is dominated by the internal reference.

Copyright © 2014, Texas Instruments Incorporated

4.31 REF, External Reference

over recommended ranges of supply voltage and operating free-air temperature (unless otherwise noted) (1)

PARAMETER		TEST CONDITIONS	V_{CC}	MIN	TYP	MAX	UNIT
V_{eREF+}	Positive external reference voltage input	$V_{eREF+} > V_{eREF-}$ (2)		1.4		AV_{CC}	V
V_{eREF-}	Negative external reference voltage input	$V_{eREF+} > V_{eREF-}$ (3)		0		1.2	V
($V_{eREF+} – V_{REF-}/V_{eREF-}$)	Differential external reference voltage input	$V_{eREF+} > V_{eREF-}$ (4)		1.4		AV_{CC}	V
I_{VeREF+}, I_{VeREF-}	Static input current	1.4 V ≤ V_{eREF+} ≤ V_{AVCC}, V_{eREF-} = 0 V, $f_{ADC10CLK}$ = 5 MHz, ADC10SHTx = 1h, Conversion rate 200 ksps	2.2 V, 3 V		±6		µA
		1.4 V ≤ V_{eREF+} ≤ V_{AVCC}, V_{eREF-} = 0 V, $f_{ADC10CLK}$ = 5 MHz, ADC10SHTx = 8h, Conversion rate 20 ksps	2.2 V, 3 V		±1		µA
C_{VREF+}, C_{VREF-}	Capacitance at VREF+ or VREF- terminal (5)				10		µF

(1) The external reference is used during ADC conversion to charge and discharge the capacitance array. The input capacitance, C_i, is also the dynamic load for an external reference during conversion. The dynamic impedance of the reference supply should follow the recommendations on analog-source impedance to allow the charge to settle for 10-bit accuracy.
(2) The accuracy limits the minimum positive external reference voltage. Lower reference voltage levels may be applied with reduced accuracy requirements.
(3) The accuracy limits the maximum negative external reference voltage. Higher reference voltage levels may be applied with reduced accuracy requirements.
(4) The accuracy limits minimum external differential reference voltage. Lower differential reference voltage levels may be applied with reduced accuracy requirements.
(5) Two decoupling capacitors, 10 µF and 100 nF, should be connected to VREF to decouple the dynamic current required for an external reference source if it is used for the ADC10_B. Also see the *MSP430FR57xx Family User's Guide* (SLAU272).

4.32 REF, Built-In Reference

over recommended ranges of supply voltage and operating free-air temperature (unless otherwise noted)

PARAMETER		TEST CONDITIONS	V_{CC}	MIN	TYP	MAX	UNIT
V_{REF+}	Positive built-in reference voltage output	REFVSEL = {2} for 2.5 V, REFON = 1	3 V	2.39	2.5	2.61	V
		REFVSEL = {1} for 2 V, REFON = 1	3 V	1.91	2.0	2.09	
		REFVSEL = {0} for 1.5 V, REFON = 1	3 V	1.43	1.5	1.57	
$AV_{CC(min)}$	AVCC minimum voltage, Positive built-in reference active	REFVSEL = {0} for 1.5 V		2.0			V
		REFVSEL = {1} for 2 V		2.2			
		REFVSEL = {2} for 2.5 V		2.7			
I_{REF+}	Operating supply current into AVCC terminal (1)	$f_{ADC10CLK}$ = 5 MHz, REFON = 1, REFBURST = 0	3 V		33		µA
T_{REF+}	Temperature coefficient of built-in reference	REFVSEL = (0, 1, 2}, REFON = 1			±35		ppm/°C
PSRR_DC	Power supply rejection ratio (DC)	AV_{CC} = $AV_{CC\ (min)}$ - $AV_{CC(max)}$, T_A = 25°C, REFON = 1, REFVSEL = {0} for 1.5 V			1600		µV/V
		AV_{CC} = $AV_{CC\ (min)}$ - $AV_{CC(max)}$, T_A = 25°C, REFON = 1, REFVSEL = {1} for 2 V			1900		
		AV_{CC} = $AV_{CC\ (min)}$ - $AV_{CC(max)}$, T_A = 25°C, REFON = 1, REFVSEL = {2} for 2.5 V			3600		
t_{SETTLE}	Settling time of reference voltage (2)	AV_{CC} = $AV_{CC\ (min)}$ - $AV_{CC(max)}$, REFVSEL = {0, 1, 2}, REFON = 0 → 1			30		µs

(1) The internal reference current is supplied by terminal AVCC. Consumption is independent of the ADC10ON control bit, unless a conversion is active. The REFON bit enables to settle the built-in reference before starting an A/D conversion.
(2) The condition is that the error in a conversion started after t_{REFON} is less than ±0.5 LSB.

Copyright © 2014, Texas Instruments Incorporated

4.33 REF, Temperature Sensor and Built-In V_{MID}

over recommended ranges of supply voltage and operating free-air temperature (unless otherwise noted)

PARAMETER		TEST CONDITIONS	V_{CC}	MIN	TYP	MAX	UNIT
V_{SENSOR}	See (1)	ADC10ON = 1, INCH = 0Ah, T_A = 0°C	2 V, 3 V		790		mV
TC_{SENSOR}		ADC10ON = 1, INCH = 0Ah	2 V, 3 V		2.55		mV/°C
$t_{SENSOR(sample)}$	Sample time required if channel 10 is selected (2)	ADC10ON = 1, INCH = 0Ah, Error of conversion result ≤ 1 LSB	2 V	30			µs
			3 V	30			
V_{MID}	AV_{CC} divider at channel 11	ADC10ON = 1, INCH = 0Bh, V_{MID} is ~0.5 × V_{AVCC}	2 V	0.96	1.0	1.04	V
			3 V	1.43	1.5	1.57	
$t_{VMID(sample)}$	Sample time required if channel 11 is selected (3)	ADC10ON = 1, INCH = 0Bh, Error of conversion result ≤ 1 LSB	2 V, 3 V	1000			ns

(1) The temperature sensor offset can vary significantly. A single-point calibration is recommended to minimize the offset error of the built-in temperature sensor.
(2) The typical equivalent impedance of the sensor is 51 kΩ. The sample time required includes the sensor-on time $t_{SENSOR(on)}$.
(3) The on-time $t_{VMID(on)}$ is included in the sampling time $t_{VMID(sample)}$; no additional on time is needed.

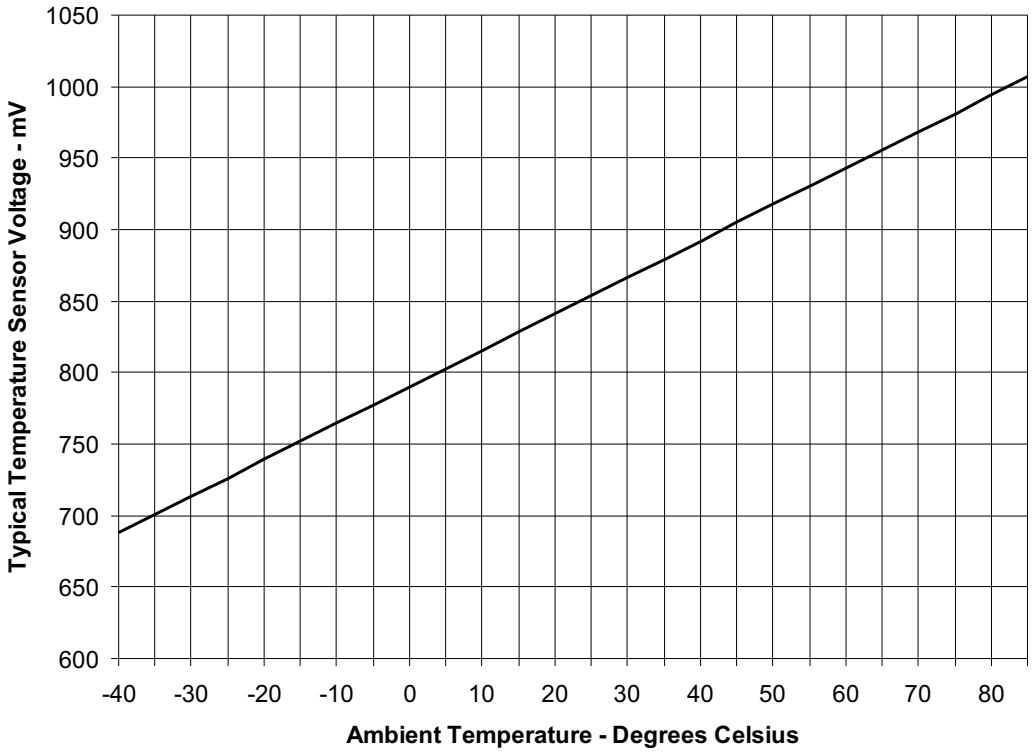

Figure 4-11. Typical Temperature Sensor Voltage

4.34 Comparator_D

over operating free-air temperature range (unless otherwise noted)

PARAMETER		TEST CONDITIONS	MIN	TYP	MAX	UNIT
t_{pd}	Propagation delay, AVCC = 2 V to 3.6 V	Overdrive = 10 mV, VIN- = (VIN+ – 400 mV) to (VIN+ + 10 mV)	49	100	202	ns
		Overdrive = 100 mV, VIN- = (VIN+ – 400 mV) to (VIN+ + 100 mV)		80		ns
		Overdrive = 250 mV, (VIN+ – 400 mV) to (VIN+ + 250 mV)		50		ns
t_{filter}	Filter timer added to the propagation delay of the comparator	CDF = 1, CDFDLY = 00	0.28	0.5	1.1	µs
		CDF = 1, CDFDLY = 01	0.49	0.9	1.8	µs
		CDF = 1, CDFDLY = 10	0.85	1.6	3.31	µs
		CDF = 1, CDFDLY = 11	1.59	3.0	6.5	µs
V_{offset}	Input offset	AVCC = 2 V to 3.6 V	–26		26	mV
V_{ic}	Common mode input range	AVCC = 2 V to 3.6 V	0		AVCC – 1	V
$I_{comp(AVCC)}$	Comparator only	CDON = 1, AVCC = 2 V to 3.6 V		28		µA
$I_{ref(AVCC)}$	Reference buffer and R-ladder	CDREFLx = 01, AVCC = 2 V to 3.6 V		20		µA
$t_{enable,comp}$	Comparator enable time	CDON = 0 to CDON = 1, AVCC = 2 V to 3.6 V		1.1	2.3	µs
$t_{enable,rladder}$	Resistor ladder enable time	CDON = 0 to CDON = 1, AVCC = 2 V to 3.6 V		1.1	2.3	µs
V_{CB_REF}	Reference voltage for a tap	VIN = voltage input to the R-ladder, n = 0 to 31	VIN × (n + 0.49) / 32	VIN × (n + 1) / 32	VIN × (n + 1.51) / 32	V

4.35 FRAM

over recommended ranges of supply voltage and operating free-air temperature (unless otherwise noted)

PARAMETER		TEST CONDITIONS	MIN	TYP	MAX	UNIT
$DV_{CC(WRITE)}$	Write supply voltage		2.0		3.6	V
t_{WRITE}	Word or byte write time				120	ns
t_{ACCESS}	Read access time (1)				60	ns
$t_{PRECHARGE}$	Precharge time (1)				60	ns
t_{CYCLE}	Cycle time, read or write operation (1)		120			ns
	Read and write endurance		10^{15}			cycles
$t_{Retention}$	Data retention duration	T_J = 25°C	100			years
		T_J = 70°C	40			
		T_J = 85°C	10			

(1) When using manual wait state control, see the *MSP430FR57xx Family User's Guide* (SLAU272) for recommended settings for common system frequencies.

Copyright © 2014, Texas Instruments Incorporated

4.36 JTAG and Spy-Bi-Wire Interface

over recommended ranges of supply voltage and operating free-air temperature (unless otherwise noted)

PARAMETER		V_{CC}	MIN	TYP	MAX	UNIT
f_{SBW}	Spy-Bi-Wire input frequency	2 V, 3 V	0		20	MHz
$t_{SBW,Low}$	Spy-Bi-Wire low clock pulse duration	2 V, 3 V	0.025		15	µs
$t_{SBW,\ En}$	Spy-Bi-Wire enable time (TEST high to acceptance of first clock edge) (1)	2 V, 3 V			1	µs
$t_{SBW,Rst}$	Spy-Bi-Wire return to normal operation time		18		37	µs
f_{TCK}	TCK input frequency, 4-wire JTAG (2)	2 V	0		5	MHz
		3 V	0		10	MHz
$R_{internal}$	Internal pulldown resistance on TEST	2 V, 3 V	19	35	51.5	kΩ

(1) Tools accessing the Spy-Bi-Wire interface must wait for the $t_{SBW,En}$ time after pulling the TEST/SBWTCK pin high before applying the first SBWTCK clock edge.
(2) f_{TCK} may be restricted to meet the timing requirements of the module selected.

Copyright © 2014, Texas Instruments Incorporated

5 Detailed Description

5.1 Functional Block Diagram

This section shows the functional block diagram for the MSP430FR5739-EP in the RHA package.

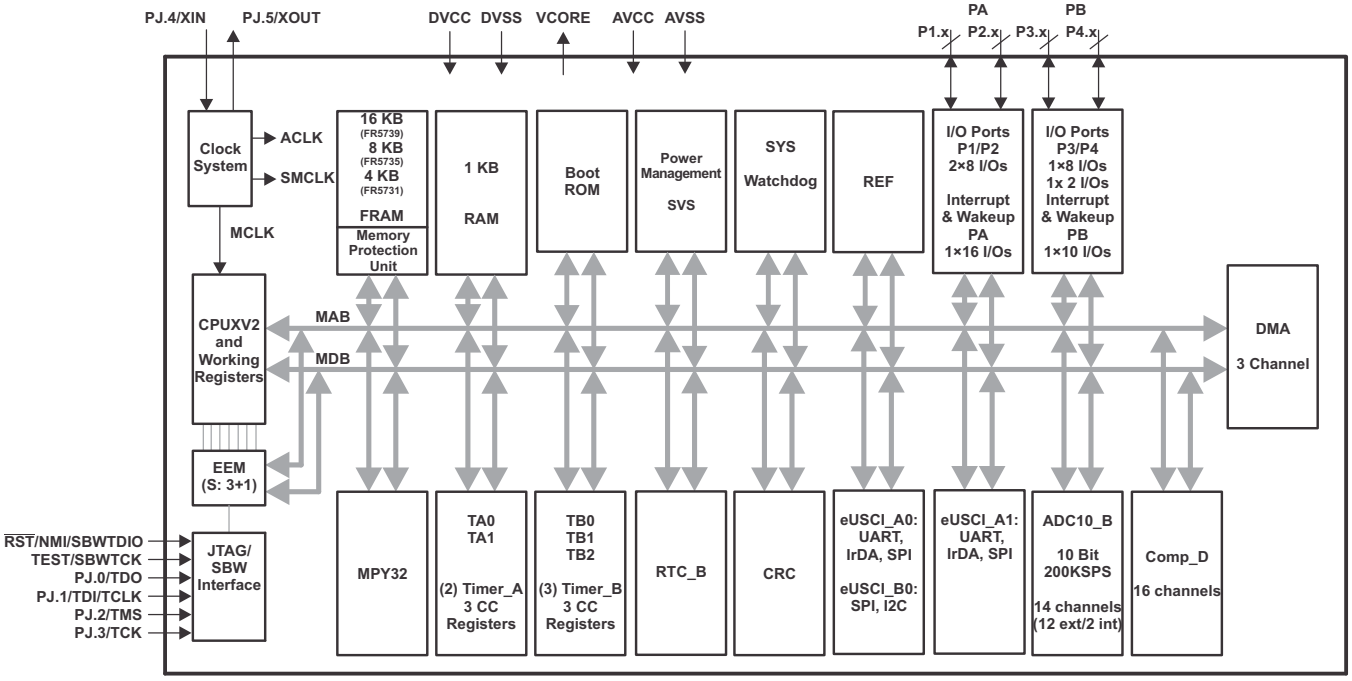

5.2 CPU

The MSP430 CPU has a 16-bit RISC architecture that is highly transparent to the application. All operations, other than program-flow instructions, are performed as register operations in conjunction with seven addressing modes for source operand and four addressing modes for destination operand.

The CPU is integrated with 16 registers that provide reduced instruction execution time. The register-to-register operation execution time is one cycle of the CPU clock.

Four of the registers, R0 to R3, are dedicated as program counter, stack pointer, status register, and constant generator, respectively. The remaining registers are general-purpose registers.

Peripherals are connected to the CPU using data, address, and control buses, and can be handled with all instructions.

The instruction set consists of the original 51 instructions with three formats and seven address modes and additional instructions for the expanded address range. Each instruction can operate on word and byte data.

5.3 Operating Modes

The MSP430 has one active mode and seven software-selectable low-power modes of operation. An interrupt event can wake up the device from low-power modes LPM0 through LPM4, service the request, and restore back to the low-power mode on return from the interrupt program. Low-power modes LPM3.5 and LPM4.5 disable the core supply to minimize power consumption.

The following eight operating modes can be configured by software:

Copyright © 2014, Texas Instruments Incorporated

- Active mode (AM)
  - All clocks are active
- Low-power mode 0 (LPM0)
  - CPU is disabled
  - ACLK active
  - MCLK disabled
  - SMCLK optionally active
  - Complete data retention
- Low-power mode 1 (LPM1)
  - CPU is disabled
  - ACLK active
  - MCLK disabled
  - SMCLK optionally active
  - DCO disabled
  - Complete data retention
- Low-power mode 2 (LPM2)
  - CPU is disabled
  - ACLK active
  - MCLK disabled
  - SMCLK optionally active
  - DCO disabled
  - Complete data retention
- Low-power mode 3 (LPM3)
  - CPU is disabled
  - ACLK active
  - MCLK and SMCLK disabled
  - DCO disabled
  - Complete data retention
- Low-power mode 4 (LPM4)
  - CPU is disabled
  - ACLK, MCLK, SMCLK disabled
  - Complete data retention
- Low-power mode 3.5 (LPM3.5)
  - RTC operation
  - Internal regulator disabled
  - No data retention
  - I/O pad state retention
  - Wakeup from $\overline{\text{RST}}$, general-purpose I/O, RTC events
- Low-power mode 4.5 (LPM4.5)
  - Internal regulator disabled
  - No data retention
  - I/O pad state retention
  - Wakeup from $\overline{\text{RST}}$ and general-purpose I/O

Copyright © 2014, Texas Instruments Incorporated

5.4 Interrupt Vector Addresses

The interrupt vectors and the power-up start address are located in the address range 0FFFFh to 0FF80h. The vector contains the 16-bit address of the appropriate interrupt-handler instruction sequence.

Table 5-1. Interrupt Sources, Flags, and Vectors

INTERRUPT SOURCE	INTERRUPT FLAG	SYSTEM INTERRUPT	WORD ADDRESS	PRIORITY
System Reset Power-Up, Brownout, Supply Supervisors External Reset RST Watchdog Timeout (Watchdog mode) WDT, FRCTL MPU, CS, PMM Password Violation FRAM double bit error detection MPU segment violation Software POR, BOR	SVSLIFG, SVSHIFG PMMRSTIFG WDTIFG WDTPW, FRCTLPW, MPUPW, CSPW, PMMPW DBDIFG MPUSEGIIFG, MPUSEG1IFG, MPUSEG2IFG, MPUSEG3IFG PMMPORIFG, PMMBORIFG (SYSRSTIV) (1) (2)	Reset	0FFFEh	63, highest
System NMI Vacant Memory Access JTAG Mailbox FRAM access time error FRAM single, double bit error detection	VMAIFG JMBNIFG, JMBOUTIFG ACCTIMIFG SBDIFG, DBDIFG (SYSSNIV) (1)	(Non)maskable	0FFFCh	62
User NMI External NMI Oscillator Fault	NMIIFG, OFIFG (SYSUNIV) (1) (2)	(Non)maskable	0FFFAh	61
Comparator_D	Comparator_D interrupt flags (CBIV) (1) (3)	Maskable	0FFF8h	60
TB0	TB0CCR0 CCIFG0 (3)	Maskable	0FFF6h	59
TB0	TB0CCR1 CCIFG1 to TB0CCR2 CCIFG2, TB0IFG (TB0IV) (1) (3)	Maskable	0FFF4h	58
Watchdog Timer (Interval Timer Mode)	WDTIFG	Maskable	0FFF2h	57
eUSCI_A0 Receive and Transmit	UCA0RXIFG, UCA0TXIFG (SPI mode) UCA0STTIFG, UCA0TXCPTIFG, UCA0RXIFG, UXA0TXIFG (UART mode) (UCA0IV) (1) (3)	Maskable	0FFF0h	56
eUSCI_B0 Receive and Transmit	UCB0STTIFG, UCB0TXCPTIFG, UCB0RXIFG, UCB0TXIFG (SPI mode) UCB0ALIFG, UCB0NACKIFG, UCB0STTIFG, UCB0STPIFG, UCB0RXIFG0, UCB0TXIFG0, UCB0RXIFG1, UCB0TXIFG1, UCB0RXIFG2, UCB0TXIFG2, UCB0RXIFG3, UCB0TXIFG3, UCB0CNTIFG, UCB0BIT9IFG (I2C mode) (UCB0IV) (1) (3)	Maskable	0FFEEh	55
ADC10_B	ADC10OVIFG, ADC10TOVIFG, ADC10HIIFG, ADC10LOIFG ADC10INIFG, ADC10IFG0 (ADC10IV) (1) (3) (4)	Maskable	0FFECh	54
TA0	TA0CCR0 CCIFG0 (3)	Maskable	0FFEAh	53
TA0	TA0CCR1 CCIFG1 to TA0CCR2 CCIFG2, TA0IFG (TA0IV) (1) (3)	Maskable	0FFE8h	52

(1) Multiple source flags
(2) A reset is generated if the CPU tries to fetch instructions from within peripheral space or vacant memory space. (Non)maskable: the individual interrupt-enable bit can disable an interrupt event, but the general-interrupt enable cannot disable it.
(3) Interrupt flags are located in the module.
(4) Only on devices with ADC, otherwise reserved.

Copyright © 2014, Texas Instruments Incorporated

Table 5-1. Interrupt Sources, Flags, and Vectors (continued)

INTERRUPT SOURCE	INTERRUPT FLAG	SYSTEM INTERRUPT	WORD ADDRESS	PRIORITY
eUSCI_A1 Receive and Transmit	UCA1RXIFG, UCA1TXIFG (SPI mode) UCA1STTIFG, UCA1TXCPTIFG, UCA1RXIFG, UXA1TXIFG (UART mode) (UCA1IV) (1) (3)	Maskable	0FFE6h	51
DMA	DMA0IFG, DMA1IFG, DMA2IFG (DMAIV) (1) (3)	Maskable	0FFE4h	50
TA1	TA1CCR0 CCIFG0 (3)	Maskable	0FFE2h	49
TA1	TA1CCR1 CCIFG1 to TA1CCR2 CCIFG2, TA1IFG (TA1IV) (1) (3)	Maskable	0FFE0h	48
I/O Port P1	P1IFG.0 to P1IFG.7 (P1IV) (1) (3)	Maskable	0FFDEh	47
TB1	TB1CCR0 CCIFG0 (3)	Maskable	0FFDCh	46
TB1	TB1CCR1 CCIFG1 to TB1CCR2 CCIFG2, TB1IFG (TB1IV) (1) (3)	Maskable	0FFDAh	45
I/O Port P2	P2IFG.0 to P2IFG.7 (P2IV) (1) (3)	Maskable	0FFD8h	44
TB2	TB2CCR0 CCIFG0 (3)	Maskable	0FFD6h	43
TB2	TB2CCR1 CCIFG1 to TB2CCR2 CCIFG2, TB2IFG (TB2IV) (1) (3)	Maskable	0FFD4h	42
I/O Port P3	P3IFG.0 to P3IFG.7 (P3IV) (1) (3)	Maskable	0FFD2h	41
I/O Port P4	P4IFG.0 to P4IFG.2 (P4IV) (1) (3)	Maskable	0FFD0h	40
RTC_B	RTCRDYIFG, RTCTEVIFG, RTCAIFG, RT0PSIFG, RT1PSIFG, RTCOFIFG (RTCIV) (1) (3)	Maskable	0FFCEh	39
Reserved	Reserved (5)		0FFCCh ⋮ 0FF80h	38 ⋮ 0, lowest

(5) Reserved interrupt vectors at addresses are not used in this device and can be used for regular program code if necessary. To maintain compatibility with other devices, it is recommended to reserve these locations.

Copyright © 2014, Texas Instruments Incorporated

5.5 Memory Organization

Table 5-2 describes the memory organization.

Table 5-2. Memory Organization(1)(2)

		MSP430FR5739-EP
Memory (FRAM) Main: interrupt vectors Main: code memory	Total Size	15.5 KB 00FFFFh–00FF80h 00FF7Fh–00C200h
RAM		1 KB 001FFFh–001C00h
Device Descriptor Info (TLV) (FRAM)		128 B 001A7Fh–001A00h
Information memory (FRAM)	N/A	0019FFh–001980h Address space mirrored to Info A
	N/A	00197Fh–001900h Address space mirrored to Info B
	Info A	128 B 0018FFh–001880h
	Info B	128 B 00187Fh–001800h
Bootstrap loader (BSL) memory (ROM)	BSL 3	512 B 0017FFh–001600h
	BSL 2	512 B 0015FFh–001400h
	BSL 1	512 B 0013FFh–001200h
	BSL 0	512 B 0011FFh–001000h
Peripherals	Size	4 KB 000FFFh–0h

(1) N/A = Not available
(2) All address space not listed in this table is considered vacant memory.

Copyright © 2014, Texas Instruments Incorporated

5.6 Bootstrap Loader (BSL)

The BSL enables users to program the FRAM or RAM using a UART serial interface. Access to the device memory by the BSL is protected by an user-defined password. Use of the BSL requires four pins (see Table 5-3). BSL entry requires a specific entry sequence on the $\overline{\text{RST}}$/NMI/SBWTDIO and TEST/SBWTCK pins. For complete description of the features of the BSL and its implementation, see the *MSP430 Programming Via the Bootstrap Loader User's Guide* (SLAU319).

Table 5-3. BSL Pin Requirements and Functions

DEVICE SIGNAL	BSL FUNCTION
$\overline{\text{RST}}$/NMI/SBWTDIO	Entry sequence signal
TEST/SBWTCK	Entry sequence signal
P2.0	Data transmit
P2.1	Data receive
VCC	Power supply
VSS	Ground supply

5.7 JTAG Operation

5.7.1 JTAG Standard Interface

The MSP430 family supports the standard JTAG interface, which requires four signals for sending and receiving data. The JTAG signals are shared with general-purpose I/O. The TEST/SBWTCK pin is used to enable the JTAG signals. In addition to these signals, the $\overline{\text{RST}}$/NMI/SBWTDIO is required to interface with MSP430 development tools and device programmers. The JTAG pin requirements are summarized in Table 5-4. For further details on interfacing to development tools and device programmers, see the *MSP430 Hardware Tools User's Guide* (SLAU278). For a complete description of the features of the JTAG interface and its implementation, see *MSP430 Programming Via the JTAG Interface* (SLAU320).

Table 5-4. JTAG Pin Requirements and Functions

DEVICE SIGNAL	DIRECTION	FUNCTION
PJ.3/TCK	IN	JTAG clock input
PJ.2/TMS	IN	JTAG state control
PJ.1/TDI/TCLK	IN	JTAG data input, TCLK input
PJ.0/TDO	OUT	JTAG data output
TEST/SBWTCK	IN	Enable JTAG pins
$\overline{\text{RST}}$/NMI/SBWTDIO	IN	External reset
VCC		Power supply
VSS		Ground supply

Copyright © 2014, Texas Instruments Incorporated

5.7.2 Spy-Bi-Wire Interface

In addition to the standard JTAG interface, the MSP430 family supports the two-wire Spy-Bi-Wire interface. Spy-Bi-Wire can be used to interface with MSP430 development tools and device programmers. The Spy-Bi-Wire interface pin requirements are summarized in Table 5-5. For further details on interfacing to development tools and device programmers, see the *MSP430 Hardware Tools User's Guide* (SLAU278). For a complete description of the features of the JTAG interface and its implementation, see *MSP430 Programming Via the JTAG Interface* (SLAU320).

Table 5-5. Spy-Bi-Wire Pin Requirements and Functions

DEVICE SIGNAL	DIRECTION	FUNCTION
TEST/SBWTCK	IN	Spy-Bi-Wire clock input
$\overline{\text{RST}}$/NMI/SBWTDIO	IN, OUT	Spy-Bi-Wire data input and output
VCC		Power supply
VSS		Ground supply

5.8 FRAM

The FRAM can be programmed through the JTAG port, Spy-Bi-Wire (SBW), the BSL, or in-system by the CPU. Features of the FRAM include:

- Low-power ultra-fast write nonvolatile memory
- Byte and word access capability
- Programmable and automated wait state generation
- Error Correction Coding (ECC) with single bit detection and correction, double bit detection

For important software design information regarding FRAM including but not limited to partitioning the memory layout according to application-specific code, constant, and data space requirements, the use of FRAM to optimize application energy consumption, and the use of the Memory Protection Unit (MPU) to maximize application robustness by protecting the program code against unintended write accesses, see the application report *MSP430™ FRAM Technology – How To and Best Practices* (SLAA628).

5.9 Memory Protection Unit (MPU)

The FRAM can be protected from inadvertent CPU execution or write access by the MPU. Features of the MPU include:

- Main memory partitioning programmable up to three segments
- Each segment's (main and information memory) access rights can be individually selected
- Access violation flags with interrupt capability for easy servicing of access violations

5.10 Peripherals

Peripherals are connected to the CPU through data, address, and control buses and can be handled using all instructions. For complete module descriptions, see the *MSP430FR57xx Family User's Guide* (SLAU272).

5.10.1 Digital I/O

There are up to four 8-bit I/O ports implemented:

- All individual I/O bits are independently programmable.
- Any combination of input, output, and interrupt conditions is possible.
- Programmable pullup or pulldown on all ports.
- Edge-selectable interrupt and LPM3.5 and LPM4.5 wake-up input capability is available for all ports.
- Read and write access to port-control registers is supported by all instructions.
- Ports can be accessed byte-wise or word-wise in pairs.

Copyright © 2014, Texas Instruments Incorporated

5.10.2 Oscillator and Clock System (CS)

The clock system includes support for a 32-kHz watch crystal oscillator XT1 (LF mode), an internal very-low-power low-frequency oscillator (VLO), an integrated internal digitally controlled oscillator (DCO), and a high-frequency crystal oscillator XT1 (HF mode). The clock system module is designed to meet the requirements of both low system cost and low power consumption. A fail-safe mechanism exists for all crystal sources. The clock system module provides the following clock signals:

- Auxiliary clock (ACLK), sourced from a 32-kHz watch crystal (XT1 LF mode), a high-frequency crystal (XT1 HF mode), the internal VLO, or the internal DCO.
- Main clock (MCLK), the system clock used by the CPU. MCLK can be sourced by the same sources made available to ACLK.
- Sub-Main clock (SMCLK), the subsystem clock used by the peripheral modules. SMCLK can be sourced by the same sources made available to ACLK.

5.10.3 Power Management Module (PMM)

The PMM includes an integrated voltage regulator that supplies the core voltage to the device. The PMM also includes supply voltage supervisor (SVS) and brownout protection. The brownout circuit is implemented to provide the proper internal reset signal to the device during power-on and power-off. The SVS circuitry detects if the supply voltage drops below a user-selectable safe level. SVS circuitry is available on the primary and core supplies.

5.10.4 Hardware Multiplier (MPY)

The multiplication operation is supported by a dedicated peripheral module. The module performs operations with 32-bit, 24-bit, 16-bit, and 8-bit operands. The module supports signed and unsigned multiplication as well as signed and unsigned multiply-and-accumulate operations.

5.10.5 Real-Time Clock (RTC_B)

The RTC_B module contains an integrated real-time clock (RTC) (calendar mode). Calendar mode integrates an internal calendar which compensates for months with fewer than 31 days and includes leap year correction. The RTC_B also supports flexible alarm functions and offset-calibration hardware. RTC operation is available in LPM3.5 mode to minimize power consumption.

5.10.6 Watchdog Timer (WDT_A)

The primary function of the watchdog timer (WDT_A) module is to perform a controlled system restart after a software problem occurs. If the selected time interval expires, a system reset is generated. If the watchdog function is not needed in an application, the module can be configured as an interval timer and can generate interrupts at selected time intervals.

5.10.7 System Module (SYS)

The SYS module handles many of the system functions within the device. These include power-on reset (POR) and power-up clear (PUC) handling, NMI source selection and management, reset interrupt vector generators, bootstrap loader entry mechanisms, and configuration management (device descriptors). It also includes a data exchange mechanism using JTAG called a JTAG mailbox that can be used in the application.

Copyright © 2014, Texas Instruments Incorporated

Table 5-6. System Module Interrupt Vector Registers

INTERRUPT VECTOR REGISTER	ADDRESS	INTERRUPT EVENT	VALUE	PRIORITY
SYSRSTIV, System Reset	019Eh	No interrupt pending	00h	
		Brownout (BOR)	02h	Highest
		RSTIFG $\overline{\text{RST}}$/NMI (BOR)	04h	
		PMMSWBOR software BOR (BOR)	06h	
		LPMx.5 wake up (BOR)	08h	
		Security violation (BOR)	0Ah	
		SVSLIFG SVSL event (BOR)	0Ch	
		SVSHIFG SVSH event (BOR)	0Eh	
		Reserved	10h	
		Reserved	12h	
		PMMSWPOR software POR (POR)	14h	
		WDTIFG watchdog timeout (PUC)	16h	
		WDTPW password violation (PUC)	18h	
		FRCTLPW password violation (PUC)	1Ah	
		DBDIFG FRAM double bit error (PUC)	1Ch	
		Peripheral area fetch (PUC)	1Eh	
		PMMPW PMM password violation (PUC)	20h	
		MPUPW MPU password violation (PUC)	22h	
		CSPW CS password violation (PUC)	24h	
		MPUSEGIIFG information memory segment violation (PUC)	26h	
		MPUSEG1IFG segment 1 memory violation (PUC)	28h	
		MPUSEG2IFG segment 2 memory violation (PUC)	2Ah	
		MPUSEG3IFG segment 3 memory violation (PUC)	2Ch	
		Reserved	2Eh	
		Reserved	30h to 3Eh	Lowest
SYSSNIV, System NMI	019Ch	No interrupt pending	00h	
		DBDIFG FRAM double bit error	02h	Highest
		ACCTIMIFG access time error	04h	
		Reserved	0Eh	
		VMAIFG Vacant memory access	10h	
		JMBINIFG JTAG mailbox input	12h	
		JMBOUTIFG JTAG mailbox output	14h	
		SBDIFG FRAM single bit error	16h	
		Reserved	18h to 1Eh	Lowest
SYSUNIV, User NMI	019Ah	No interrupt pending	00h	
		NMIFG NMI pin	02h	Highest
		OFIFG oscillator fault	04h	
		Reserved	06h	
		Reserved	08h	
		Reserved	0Ah to 1Eh	Lowest

Copyright © 2014, Texas Instruments Incorporated

5.10.8 DMA Controller

The DMA controller allows movement of data from one memory address to another without CPU intervention. For example, the DMA controller can be used to move data from the ADC10_B conversion memory to RAM. Using the DMA controller can increase the throughput of peripheral modules. The DMA controller reduces system power consumption by allowing the CPU to remain in sleep mode, without having to awaken to move data to or from a peripheral.

Table 5-7. DMA Trigger Assignments (1)

TRIGGER	CHANNEL 0	CHANNEL 1	CHANNEL 2
0	DMAREQ	DMAREQ	DMAREQ
1	TA0CCR0 CCIFG	TA0CCR0 CCIFG	TA0CCR0 CCIFG
2	TA0CCR2 CCIFG	TA0CCR2 CCIFG	TA0CCR2 CCIFG
3	TA1CCR0 CCIFG	TA1CCR0 CCIFG	TA1CCR0 CCIFG
4	TA1CCR2 CCIFG	TA1CCR2 CCIFG	TA1CCR2 CCIFG
5	Reserved	Reserved	Reserved
6	Reserved	Reserved	Reserved
7	TB0CCR0 CCIFG	TB0CCR0 CCIFG	TB0CCR0 CCIFG
8	TB0CCR2 CCIFG	TB0CCR2 CCIFG	TB0CCR2 CCIFG
9	TB1CCR0 CCIFG (2)	TB1CCR0 CCIFG (2)	TB1CCR0 CCIFG (2)
10	TB1CCR2 CCIFG (2)	TB1CCR2 CCIFG (2)	TB1CCR2 CCIFG (2)
11	TB2CCR0 CCIFG (3)	TB2CCR0 CCIFG (3)	TB2CCR0 CCIFG (3)
12	TB2CCR2 CCIFG (3)	TB2CCR2 CCIFG (3)	TB2CCR2 CCIFG (3)
13	Reserved	Reserved	Reserved
14	UCA0RXIFG	UCA0RXIFG	UCA0RXIFG
15	UCA0TXIFG	UCA0TXIFG	UCA0TXIFG
16	UCA1RXIFG (4)	UCA1RXIFG (4)	UCA1RXIFG (4)
17	UCA1TXIFG (4)	UCA1TXIFG (4)	UCA1TXIFG (4)
18	UCB0RXIFG0	UCB0RXIFG0	UCB0RXIFG0
19	UCB0TXIFG0	UCB0TXIFG0	UCB0TXIFG0
20	UCB0RXIFG1	UCB0RXIFG1	UCB0RXIFG1
21	UCB0TXIFG1	UCB0TXIFG1	UCB0TXIFG1
22	UCB0RXIFG2	UCB0RXIFG2	UCB0RXIFG2
23	UCB0TXIFG2	UCB0TXIFG2	UCB0TXIFG2
24	UCB0RXIFG3	UCB0RXIFG3	UCB0RXIFG3
25	UCB0TXIFG3	UCB0TXIFG3	UCB0TXIFG3
26	ADC10IFGx (5)	ADC10IFGx (5)	ADC10IFGx (5)
27	Reserved	Reserved	Reserved
28	Reserved	Reserved	Reserved
29	MPY ready	MPY ready	MPY ready
30	DMA2IFG	DMA0IFG	DMA1IFG
31	DMAE0	DMAE0	DMAE0

(1) If a reserved trigger source is selected, no trigger is generated.
(2) Only on devices with TB1, otherwise reserved
(3) Only on devices with TB2, otherwise reserved
(4) Only on devices with eUSCI_A1, otherwise reserved
(5) Only on devices with ADC, otherwise reserved

Copyright © 2014, Texas Instruments Incorporated

5.10.9 Enhanced Universal Serial Communication Interface (eUSCI)

The eUSCI modules are used for serial data communication. The eUSCI module supports synchronous communication protocols such as SPI (3 or 4 pin) and I^2C, and asynchronous communication protocols such as UART, enhanced UART with automatic baudrate detection, and IrDA. Each eUSCI module contains two portions, A and B.

The eUSCI_An module provides support for SPI (3 pin or 4 pin), UART, enhanced UART, or IrDA.

The eUSCI_Bn module provides support for SPI (3 pin or 4 pin) or I2C.

The MSP430FR5739-EP series include one or two eUSCI_An modules (eUSCI_A0, eUSCI_A1) and one eUSCI_Bn module (eUSCI_B).

5.10.10 TA0, TA1

TA0 and TA1 are 16-bit timers/counters (Timer_A type) with three capture/compare registers each. Each can support multiple capture/compares, PWM outputs, and interval timing. Each has extensive interrupt capabilities. Interrupts may be generated from the counter on overflow conditions and from each of the capture/compare registers.

Table 5-8. TA0 Signal Connections

INPUT PIN NUMBER	DEVICE INPUT SIGNAL	MODULE INPUT SIGNAL	MODULE BLOCK	MODULE OUTPUT SIGNAL	DEVICE OUTPUT SIGNAL	OUTPUT PIN NUMBER
3-P1.2	TA0CLK	TACLK	Timer	N/A	N/A	
	ACLK (internal)	ACLK				
	SMCLK (internal)	SMCLK				
3-P1.2	TA0CLK	$\overline{\text{TACLK}}$				
28-P1.6	TA0.0	CCI0A	CCR0	TA0	TA0.0	28-P1.6
34-P2.3	TA0.0	CCI0B				34-P2.3
	DV_{SS}	GND				
	DV_{CC}	V_{CC}				
1-P1.0	TA0.1	CCI1A	CCR1	TA1	TA0.1	1-P1.0
	CDOUT (internal)	CCI1B				ADC10 (internal) (1) ADC10SHSx = {1}
	DV_{SS}	GND				
	DV_{CC}	V_{CC}				
2-P1.1	TA0.2	CCI2A	CCR2	TA2	TA0.2	2-P1.1
	ACLK (internal)	CCI2B				
	DV_{SS}	GND				
	DV_{CC}	V_{CC}				

(1) Only on devices with ADC

Copyright © 2014, Texas Instruments Incorporated

Table 5-9. TA1 Signal Connections

INPUT PIN NUMBER	DEVICE INPUT SIGNAL	MODULE INPUT SIGNAL	MODULE BLOCK	MODULE OUTPUT SIGNAL	DEVICE OUTPUT SIGNAL	OUTPUT PIN NUMBER
2-P1.1	TA1CLK	TACLK	Timer	N/A	N/A	
	ACLK (internal)	ACLK				
	SMCLK (internal)	SMCLK				
2-P1.1	TA1CLK	$\overline{\text{TACLK}}$				
29-P1.7	TA1.0	CCI0A	CCR0	TA0	TA1.0	29-P1.7
35-P2.4	TA1.0	CCI0B				35-P2.4
	DV_{SS}	GND				
	DV_{CC}	V_{CC}				
3-P1.2	TA1.1	CCI1A	CCR1	TA1	TA1.1	3-P1.2
	CDOUT (internal)	CCI1B				
	DV_{SS}	GND				
	DV_{CC}	V_{CC}				
8-P1.3	TA1.2	CCI2A	CCR2	TA2	TA1.2	8-P1.3
	ACLK (internal)	CCI2B				
	DV_{SS}	GND				
	DV_{CC}	V_{CC}				

Copyright © 2014, Texas Instruments Incorporated

5.10.11 TB0, TB1, TB2

TB0, TB1, and TB2 are 16-bit timers/counters (Timer_B type) with three capture/compare registers each. Each can support multiple capture/compares, PWM outputs, and interval timing. Each has extensive interrupt capabilities. Interrupts may be generated from the counter on overflow conditions and from each of the capture/compare registers.

Table 5-10. TB0 Signal Connections

INPUT PIN NUMBER	DEVICE INPUT SIGNAL	MODULE INPUT SIGNAL	MODULE BLOCK	MODULE OUTPUT SIGNAL	DEVICE OUTPUT SIGNAL	OUTPUT PIN NUMBER
21-P2.0	TB0CLK	TBCLK	Timer	N/A	N/A	
	ACLK (internal)	ACLK				
	SMCLK (internal)	SMCLK				
21-P2.0	TB0CLK	$\overline{\text{TBCLK}}$				
22-P2.1	TB0.0	CCI0A	CCR0	TB0	TB0.0	22-P2.1
17-P2.5	TB0.0	CCI0B				17-P2.5
	DV_{SS}	GND				ADC10 (internal) (1) ADC10SHSx = {2}
	DV_{CC}	V_{CC}				
9-P1.4	TB0.1	CCI1A	CCR1	TB1	TB0.1	9-P1.4
	CDOUT (internal)	CCI1B				ADC10 (internal) (1) ADC10SHSx = {3}
	DV_{SS}	GND				
	DV_{CC}	V_{CC}				
10-P1.5	TB0.2	CCI2A	CCR2	TB2	TB0.2	10-P1.5
	ACLK (internal)	CCI2B				
	DV_{SS}	GND				
	DV_{CC}	V_{CC}				

(1) Only on devices with ADC

Copyright © 2014, Texas Instruments Incorporated

Table 5-11. TB1 Signal Connections (1)

INPUT PIN NUMBER	DEVICE INPUT SIGNAL	MODULE INPUT SIGNAL	MODULE BLOCK	MODULE OUTPUT SIGNAL	DEVICE OUTPUT SIGNAL	OUTPUT PIN NUMBER
26-P3.6	TB1CLK	TBCLK	Timer	N/A	N/A	
	ACLK (internal)	ACLK				
	SMCLK (internal)	SMCLK				
26-P3.6	TB1CLK	$\overline{\text{TBCLK}}$				
23-P2.2	TB1.0	CCI0A	CCR0	TB0	TB1.0	23-P2.2
18-P2.6	TB1.0	CCI0B				18-P2.6
	DV_{SS}	GND				
	DV_{CC}	V_{CC}				
28-P1.6	TB1.1	CCI1A	CCR1	TB1	TB1.1	28-P1.6
24-P3.4	TB1.1	CCI1B				24-P3.4
	DV_{SS}	GND				
	DV_{CC}	V_{CC}				
29-P1.7	TB1.2	CCI2A	CCR2	TB2	TB1.2	29-P1.7
25-P3.5	TB1.2	CCI2B				25-P3.5
	DV_{SS}	GND				
	DV_{CC}	V_{CC}				

(1) TB1 is not present on all device types.

Table 5-12. TB2 Signal Connections (1)

INPUT PIN NUMBER	DEVICE INPUT SIGNAL	MODULE INPUT SIGNAL	MODULE BLOCK	MODULE OUTPUT SIGNAL	DEVICE OUTPUT SIGNAL	OUTPUT PIN NUMBER
24-P3.4	TB2CLK	TBCLK	Timer	N/A	N/A	
	ACLK (internal)	ACLK				
	SMCLK (internal)	SMCLK				
24-P3.4	TB2CLK	$\overline{\text{TBCLK}}$				
21-P2.0	TB2.0	CCI0A	CCR0	TB0	TB2.0	21-P2.0
15-P4.0	TB2.0	CCI0B				15-P4.0
	DV_{SS}	GND				
	DV_{CC}	V_{CC}				
22-P2.1	TB2.1	CCI1A	CCR1	TB1	TB2.1	22-P2.1
26-P3.6	TB2.1	CCI1B				26-P3.6
	DV_{SS}	GND				
	DV_{CC}	V_{CC}				
23-P2.2	TB2.2	CCI2A	CCR2	TB2	TB2.2	23-P2.2
27-P3.7	TB2.2	CCI2B				27-P3.7
	DV_{SS}	GND				
	DV_{CC}	V_{CC}				

(1) TB2 is not present on all device types.

Copyright © 2014, Texas Instruments Incorporated

5.10.12 ADC10_B

The ADC10_B module supports fast 10-bit analog-to-digital conversions. The module implements a 10-bit SAR core, sample select control, reference generator, and a conversion result buffer. A window comparator with a lower limit and an upper limit allows CPU-independent result monitoring with three window comparator interrupt flags.

5.10.13 Comparator_D

The primary function of the Comparator_D module is to support precision slope analog-to-digital conversions, battery voltage supervision, and monitoring of external analog signals.

5.10.14 CRC16

The CRC16 module produces a signature based on a sequence of entered data values and can be used for data checking purposes. The CRC16 module signature is based on the CRC-CCITT standard.

5.10.15 Shared Reference (REF)

The reference module (REF) is responsible for generation of all critical reference voltages that can be used by the various analog peripherals in the device.

5.10.16 Embedded Emulation Module (EEM)

The EEM supports real-time in-system debugging. The S version of the EEM implemented on all devices has the following features:

- Three hardware triggers or breakpoints on memory access
- One hardware trigger or breakpoint on CPU register write access
- Up to four hardware triggers can be combined to form complex triggers or breakpoints
- One cycle counter
- Clock control on module level

Copyright © 2014, Texas Instruments Incorporated

5.10.17 Peripheral File Map

Table 5-13 provides the base address and offset range of all available peripherals.

Table 5-13. Peripherals

MODULE NAME	BASE ADDRESS	OFFSET ADDRESS RANGE
Special Functions (see Table 5-14)	0100h	000h-01Fh
PMM (see Table 5-15)	0120h	000h-010h
FRAM Control (see Table 5-16)	0140h	000h-00Fh
CRC16 (see Table 5-17)	0150h	000h-007h
Watchdog (see Table 5-18)	015Ch	000h-001h
CS (see Table 5-19)	0160h	000h-00Fh
SYS (see Table 5-20)	0180h	000h-01Fh
Shared Reference (see Table 5-21)	01B0h	000h-001h
Port P1, P2 (see Table 5-22)	0200h	000h-01Fh
Port P3, P4 (see Table 5-23)	0220h	000h-01Fh
Port PJ (see Table 5-24)	0320h	000h-01Fh
TA0 (see Table 5-25)	0340h	000h-02Fh
TA1 (see Table 5-26)	0380h	000h-02Fh
TB0 (see Table 5-27)	03C0h	000h-02Fh
TB1 (see Table 5-28)	0400h	000h-02Fh
TB2 (see Table 5-29)	0440h	000h-02Fh
Real-Time Clock (RTC_B) (see Table 5-30)	04A0h	000h-01Fh
32-Bit Hardware Multiplier (see Table 5-31)	04C0h	000h-02Fh
DMA General Control (see Table 5-32)	0500h	000h-00Fh
DMA Channel 0 (see Table 5-32)	0510h	000h-00Ah
DMA Channel 1 (see Table 5-32)	0520h	000h-00Ah
DMA Channel 2 (see Table 5-32)	0530h	000h-00Ah
MPU Control (see Table 5-33)	05A0h	000h-00Fh
eUSCI_A0 (see Table 5-34)	05C0h	000h-01Fh
eUSCI_A1 (see Table 5-35)	05E0h	000h-01Fh
eUSCI_B0 (see Table 5-36)	0640h	000h-02Fh
ADC10_B (see Table 5-37)	0700h	000h-03Fh
Comparator_D (see Table 5-38)	08C0h	000h-00Fh

Copyright © 2014, Texas Instruments Incorporated

Table 5-14. Special Function Registers (Base Address: 0100h)

REGISTER DESCRIPTION	REGISTER	OFFSET
SFR interrupt enable	SFRIE1	00h
SFR interrupt flag	SFRIFG1	02h
SFR reset pin control	SFRRPCR	04h

Table 5-15. PMM Registers (Base Address: 0120h)

REGISTER DESCRIPTION	REGISTER	OFFSET
PMM Control 0	PMMCTL0	00h
PMM interrupt flags	PMMIFG	0Ah
PM5 Control 0	PM5CTL0	10h

Table 5-16. FRAM Control Registers (Base Address: 0140h)

REGISTER DESCRIPTION	REGISTER	OFFSET
FRAM control 0	FRCTLCTL0	00h
General control 0	GCCTL0	04h
General control 1	GCCTL1	06h

Table 5-17. CRC16 Registers (Base Address: 0150h)

REGISTER DESCRIPTION	REGISTER	OFFSET
CRC data input	CRC16DI	00h
CRC data input reverse byte	CRCDIRB	02h
CRC initialization and result	CRCINIRES	04h
CRC result reverse byte	CRCRESR	06h

Table 5-18. Watchdog Registers (Base Address: 015Ch)

REGISTER DESCRIPTION	REGISTER	OFFSET
Watchdog timer control	WDTCTL	00h

Table 5-19. CS Registers (Base Address: 0160h)

REGISTER DESCRIPTION	REGISTER	OFFSET
CS control 0	CSCTL0	00h
CS control 1	CSCTL1	02h
CS control 2	CSCTL2	04h
CS control 3	CSCTL3	06h
CS control 4	CSCTL4	08h
CS control 5	CSCTL5	0Ah
CS control 6	CSCTL6	0Ch

Copyright © 2014, Texas Instruments Incorporated

Table 5-20. SYS Registers (Base Address: 0180h)

REGISTER DESCRIPTION	REGISTER	OFFSET
System control	SYSCTL	00h
JTAG mailbox control	SYSJMBC	06h
JTAG mailbox input 0	SYSJMBI0	08h
JTAG mailbox input 1	SYSJMBI1	0Ah
JTAG mailbox output 0	SYSJMBO0	0Ch
JTAG mailbox output 1	SYSJMBO1	0Eh
Bus Error vector generator	SYSBERRIV	18h
User NMI vector generator	SYSUNIV	1Ah
System NMI vector generator	SYSSNIV	1Ch
Reset vector generator	SYSRSTIV	1Eh

Table 5-21. Shared Reference Registers (Base Address: 01B0h)

REGISTER DESCRIPTION	REGISTER	OFFSET
Shared reference control	REFCTL	00h

Table 5-22. Port P1, P2 Registers (Base Address: 0200h)

REGISTER DESCRIPTION	REGISTER	OFFSET
Port P1 input	P1IN	00h
Port P1 output	P1OUT	02h
Port P1 direction	P1DIR	04h
Port P1 pullup/pulldown enable	P1REN	06h
Port P1 selection 0	P1SEL0	0Ah
Port P1 selection 1	P1SEL1	0Ch
Port P1 interrupt vector word	P1IV	0Eh
Port P1 complement selection	P1SELC	16h
Port P1 interrupt edge select	P1IES	18h
Port P1 interrupt enable	P1IE	1Ah
Port P1 interrupt flag	P1IFG	1Ch
Port P2 input	P2IN	01h
Port P2 output	P2OUT	03h
Port P2 direction	P2DIR	05h
Port P2 pullup/pulldown enable	P2REN	07h
Port P2 selection 0	P2SEL0	0Bh
Port P2 selection 1	P2SEL1	0Dh
Port P2 complement selection	P2SELC	17h
Port P2 interrupt vector word	P2IV	1Eh
Port P2 interrupt edge select	P2IES	19h
Port P2 interrupt enable	P2IE	1Bh
Port P2 interrupt flag	P2IFG	1Dh

Copyright © 2014, Texas Instruments Incorporated

Table 5-23. Port P3, P4 Registers (Base Address: 0220h)

REGISTER DESCRIPTION	REGISTER	OFFSET
Port P3 input	P3IN	00h
Port P3 output	P3OUT	02h
Port P3 direction	P3DIR	04h
Port P3 pullup/pulldown enable	P3REN	06h
Port P3 selection 0	P3SEL0	0Ah
Port P3 selection 1	P3SEL1	0Ch
Port P3 interrupt vector word	P3IV	0Eh
Port P3 complement selection	P3SELC	16h
Port P3 interrupt edge select	P3IES	18h
Port P3 interrupt enable	P3IE	1Ah
Port P3 interrupt flag	P3IFG	1Ch
Port P4 input	P4IN	01h
Port P4 output	P4OUT	03h
Port P4 direction	P4DIR	05h
Port P4 pullup/pulldown enable	P4REN	07h
Port P4 selection 0	P4SEL0	0Bh
Port P4 selection 1	P4SEL1	0Dh
Port P4 complement selection	P4SELC	17h
Port P4 interrupt vector word	P4IV	1Eh
Port P4 interrupt edge select	P4IES	19h
Port P4 interrupt enable	P4IE	1Bh
Port P4 interrupt flag	P4IFG	1Dh

Table 5-24. Port J Registers (Base Address: 0320h)

REGISTER DESCRIPTION	REGISTER	OFFSET
Port PJ input	PJIN	00h
Port PJ output	PJOUT	02h
Port PJ direction	PJDIR	04h
Port PJ pullup/pulldown enable	PJREN	06h
Port PJ selection 0	PJSEL0	0Ah
Port PJ selection 1	PJSEL1	0Ch
Port PJ complement selection	PJSELC	16h

Copyright © 2014, Texas Instruments Incorporated

Table 5-25. TA0 Registers (Base Address: 0340h)

REGISTER DESCRIPTION	REGISTER	OFFSET
TA0 control	TA0CTL	00h
Capture/compare control 0	TA0CCTL0	02h
Capture/compare control 1	TA0CCTL1	04h
Capture/compare control 2	TA0CCTL2	06h
TA0 counter register	TA0R	10h
Capture/compare register 0	TA0CCR0	12h
Capture/compare register 1	TA0CCR1	14h
Capture/compare register 2	TA0CCR2	16h
TA0 expansion register 0	TA0EX0	20h
TA0 interrupt vector	TA0IV	2Eh

Table 5-26. TA1 Registers (Base Address: 0380h)

REGISTER DESCRIPTION	REGISTER	OFFSET
TA1 control	TA1CTL	00h
Capture/compare control 0	TA1CCTL0	02h
Capture/compare control 1	TA1CCTL1	04h
Capture/compare control 2	TA1CCTL2	06h
TA1 counter register	TA1R	10h
Capture/compare register 0	TA1CCR0	12h
Capture/compare register 1	TA1CCR1	14h
Capture/compare register 2	TA1CCR2	16h
TA1 expansion register 0	TA1EX0	20h
TA1 interrupt vector	TA1IV	2Eh

Table 5-27. TB0 Registers (Base Address: 03C0h)

REGISTER DESCRIPTION	REGISTER	OFFSET
TB0 control	TB0CTL	00h
Capture/compare control 0	TB0CCTL0	02h
Capture/compare control 1	TB0CCTL1	04h
Capture/compare control 2	TB0CCTL2	06h
TB0 register	TB0R	10h
Capture/compare register 0	TB0CCR0	12h
Capture/compare register 1	TB0CCR1	14h
Capture/compare register 2	TB0CCR2	16h
TB0 expansion register 0	TB0EX0	20h
TB0 interrupt vector	TB0IV	2Eh

Copyright © 2014, Texas Instruments Incorporated

Table 5-28. TB1 Registers (Base Address: 0400h)

REGISTER DESCRIPTION	REGISTER	OFFSET
TB1 control	TB1CTL	00h
Capture/compare control 0	TB1CCTL0	02h
Capture/compare control 1	TB1CCTL1	04h
Capture/compare control 2	TB1CCTL2	06h
TB1 register	TB1R	10h
Capture/compare register 0	TB1CCR0	12h
Capture/compare register 1	TB1CCR1	14h
Capture/compare register 2	TB1CCR2	16h
TB1 expansion register 0	TB1EX0	20h
TB1 interrupt vector	TB1IV	2Eh

Table 5-29. TB2 Registers (Base Address: 0440h)

REGISTER DESCRIPTION	REGISTER	OFFSET
TB2 control	TB2CTL	00h
Capture/compare control 0	TB2CCTL0	02h
Capture/compare control 1	TB2CCTL1	04h
Capture/compare control 2	TB2CCTL2	06h
TB2 register	TB2R	10h
Capture/compare register 0	TB2CCR0	12h
Capture/compare register 1	TB2CCR1	14h
Capture/compare register 2	TB2CCR2	16h
TB2 expansion register 0	TB2EX0	20h
TB2 interrupt vector	TB2IV	2Eh

Copyright © 2014, Texas Instruments Incorporated

Table 5-30. Real-Time Clock Registers (Base Address: 04A0h)

REGISTER DESCRIPTION	REGISTER	OFFSET
RTC control 0	RTCCTL0	00h
RTC control 1	RTCCTL1	01h
RTC control 2	RTCCTL2	02h
RTC control 3	RTCCTL3	03h
RTC prescaler 0 control	RTCPS0CTL	08h
RTC prescaler 1 control	RTCPS1CTL	0Ah
RTC prescaler 0	RTCPS0	0Ch
RTC prescaler 1	RTCPS1	0Dh
RTC interrupt vector word	RTCIV	0Eh
RTC seconds, RTC counter register 1	RTCSEC, RTCNT1	10h
RTC minutes, RTC counter register 2	RTCMIN, RTCNT2	11h
RTC hours, RTC counter register 3	RTCHOUR, RTCNT3	12h
RTC day of week, RTC counter register 4	RTCDOW, RTCNT4	13h
RTC days	RTCDAY	14h
RTC month	RTCMON	15h
RTC year low	RTCYEARL	16h
RTC year high	RTCYEARH	17h
RTC alarm minutes	RTCAMIN	18h
RTC alarm hours	RTCAHOUR	19h
RTC alarm day of week	RTCADOW	1Ah
RTC alarm days	RTCADAY	1Bh
Binary-to-BCD conversion register	BIN2BCD	1Ch
BCD-to-binary conversion register	BCD2BIN	1Eh

Copyright © 2014, Texas Instruments Incorporated

Table 5-31. 32-Bit Hardware Multiplier Registers (Base Address: 04C0h)

REGISTER DESCRIPTION	REGISTER	OFFSET
16-bit operand 1 – multiply	MPY	00h
16-bit operand 1 – signed multiply	MPYS	02h
16-bit operand 1 – multiply accumulate	MAC	04h
16-bit operand 1 – signed multiply accumulate	MACS	06h
16-bit operand 2	OP2	08h
16 × 16 result low word	RESLO	0Ah
16 × 16 result high word	RESHI	0Ch
16 × 16 sum extension register	SUMEXT	0Eh
32-bit operand 1 – multiply low word	MPY32L	10h
32-bit operand 1 – multiply high word	MPY32H	12h
32-bit operand 1 – signed multiply low word	MPYS32L	14h
32-bit operand 1 – signed multiply high word	MPYS32H	16h
32-bit operand 1 – multiply accumulate low word	MAC32L	18h
32-bit operand 1 – multiply accumulate high word	MAC32H	1Ah
32-bit operand 1 – signed multiply accumulate low word	MACS32L	1Ch
32-bit operand 1 – signed multiply accumulate high word	MACS32H	1Eh
32-bit operand 2 – low word	OP2L	20h
32-bit operand 2 – high word	OP2H	22h
32 × 32 result 0 – least significant word	RES0	24h
32 × 32 result 1	RES1	26h
32 × 32 result 2	RES2	28h
32 × 32 result 3 – most significant word	RES3	2Ah
MPY32 control register 0	MPY32CTL0	2Ch

Copyright © 2014, Texas Instruments Incorporated

Table 5-32. DMA Registers (Base Address DMA General Control: 0500h, DMA Channel 0: 0510h, DMA Channel 1: 0520h, DMA Channel 2: 0530h)

REGISTER DESCRIPTION	REGISTER	OFFSET
DMA channel 0 control	DMA0CTL	00h
DMA channel 0 source address low	DMA0SAL	02h
DMA channel 0 source address high	DMA0SAH	04h
DMA channel 0 destination address low	DMA0DAL	06h
DMA channel 0 destination address high	DMA0DAH	08h
DMA channel 0 transfer size	DMA0SZ	0Ah
DMA channel 1 control	DMA1CTL	00h
DMA channel 1 source address low	DMA1SAL	02h
DMA channel 1 source address high	DMA1SAH	04h
DMA channel 1 destination address low	DMA1DAL	06h
DMA channel 1 destination address high	DMA1DAH	08h
DMA channel 1 transfer size	DMA1SZ	0Ah
DMA channel 2 control	DMA2CTL	00h
DMA channel 2 source address low	DMA2SAL	02h
DMA channel 2 source address high	DMA2SAH	04h
DMA channel 2 destination address low	DMA2DAL	06h
DMA channel 2 destination address high	DMA2DAH	08h
DMA channel 2 transfer size	DMA2SZ	0Ah
DMA module control 0	DMACTL0	00h
DMA module control 1	DMACTL1	02h
DMA module control 2	DMACTL2	04h
DMA module control 3	DMACTL3	06h
DMA module control 4	DMACTL4	08h
DMA interrupt vector	DMAIV	0Ah

Table 5-33. MPU Control Registers (Base Address: 05A0h)

REGISTER DESCRIPTION	REGISTER	OFFSET
MPU control 0	MPUCTL0	00h
MPU control 1	MPUCTL1	02h
MPU Segmentation Register	MPUSEG	04h
MPU access management	MPUSAM	06h

Copyright © 2014, Texas Instruments Incorporated

Table 5-34. eUSCI_A0 Registers (Base Address: 05C0h)

REGISTER DESCRIPTION	REGISTER	OFFSET
eUSCI_A control word 0	UCA0CTLW0	00h
eUSCI _A control word 1	UCA0CTLW1	02h
eUSCI_A baud rate 0	UCA0BR0	06h
eUSCI_A baud rate 1	UCA0BR1	07h
eUSCI_A modulation control	UCA0MCTLW	08h
eUSCI_A status	UCA0STAT	0Ah
eUSCI_A receive buffer	UCA0RXBUF	0Ch
eUSCI_A transmit buffer	UCA0TXBUF	0Eh
eUSCI_A LIN control	UCA0ABCTL	10h
eUSCI_A IrDA transmit control	UCA0IRTCTL	12h
eUSCI_A IrDA receive control	UCA0IRRCTL	13h
eUSCI_A interrupt enable	UCA0IE	1Ah
eUSCI_A interrupt flags	UCA0IFG	1Ch
eUSCI_A interrupt vector word	UCA0IV	1Eh

Table 5-35. eUSCI_A1 Registers (Base Address: 05E0h)

REGISTER DESCRIPTION	REGISTER	OFFSET
eUSCI_A control word 0	UCA1CTLW0	00h
eUSCI _A control word 1	UCA1CTLW1	02h
eUSCI_A baud rate 0	UCA1BR0	06h
eUSCI_A baud rate 1	UCA1BR1	07h
eUSCI_A modulation control	UCA1MCTLW	08h
eUSCI_A status	UCA1STAT	0Ah
eUSCI_A receive buffer	UCA1RXBUF	0Ch
eUSCI_A transmit buffer	UCA1TXBUF	0Eh
eUSCI_A LIN control	UCA1ABCTL	10h
eUSCI_A IrDA transmit control	UCA1IRTCTL	12h
eUSCI_A IrDA receive control	UCA1IRRCTL	13h
eUSCI_A interrupt enable	UCA1IE	1Ah
eUSCI_A interrupt flags	UCA1IFG	1Ch
eUSCI_A interrupt vector word	UCA1IV	1Eh

Copyright © 2014, Texas Instruments Incorporated

Table 5-36. eUSCI_B0 Registers (Base Address: 0640h)

REGISTER DESCRIPTION	REGISTER	OFFSET
eUSCI_B control word 0	UCB0CTLW0	00h
eUSCI_B control word 1	UCB0CTLW1	02h
eUSCI_B bit rate 0	UCB0BR0	06h
eUSCI_B bit rate 1	UCB0BR1	07h
eUSCI_B status word	UCB0STATW	08h
eUSCI_B byte counter threshold	UCB0TBCNT	0Ah
eUSCI_B receive buffer	UCB0RXBUF	0Ch
eUSCI_B transmit buffer	UCB0TXBUF	0Eh
eUSCI_B I2C own address 0	UCB0I2COA0	14h
eUSCI_B I2C own address 1	UCB0I2COA1	16h
eUSCI_B I2C own address 2	UCB0I2COA2	18h
eUSCI_B I2C own address 3	UCB0I2COA3	1Ah
eUSCI_B received address	UCB0ADDRX	1Ch
eUSCI_B address mask	UCB0ADDMASK	1Eh
eUSCI I2C slave address	UCB0I2CSA	20h
eUSCI interrupt enable	UCB0IE	2Ah
eUSCI interrupt flags	UCB0IFG	2Ch
eUSCI interrupt vector word	UCB0IV	2Eh

Table 5-37. ADC10_B Registers (Base Address: 0700h)

REGISTER DESCRIPTION	REGISTER	OFFSET
ADC10_B Control register 0	ADC10CTL0	00h
ADC10_B Control register 1	ADC10CTL1	02h
ADC10_B Control register 2	ADC10CTL2	04h
ADC10_B Window Comparator Low Threshold	ADC10LO	06h
ADC10_B Window Comparator High Threshold	ADC10HI	08h
ADC10_B Memory Control Register 0	ADC10MCTL0	0Ah
ADC10_B Conversion Memory Register	ADC10MEM0	12h
ADC10_B Interrupt Enable	ADC10IE	1Ah
ADC10_B Interrupt Flags	ADC10IGH	1Ch
ADC10_B Interrupt Vector Word	ADC10IV	1Eh

Table 5-38. Comparator_D Registers (Base Address: 08C0h)

REGISTER DESCRIPTION	REGISTER	OFFSET
Comparator_D control register 0	CDCTL0	00h
Comparator_D control register 1	CDCTL1	02h
Comparator_D control register 2	CDCTL2	04h
Comparator_D control register 3	CDCTL3	06h
Comparator_D interrupt register	CDINT	0Ch
Comparator_D interrupt vector word	CDIV	0Eh

Copyright © 2014, Texas Instruments Incorporated

6 Input/Output Schematics

6.1 Port P1, P1.0 to P1.2, Input/Output With Schmitt Trigger

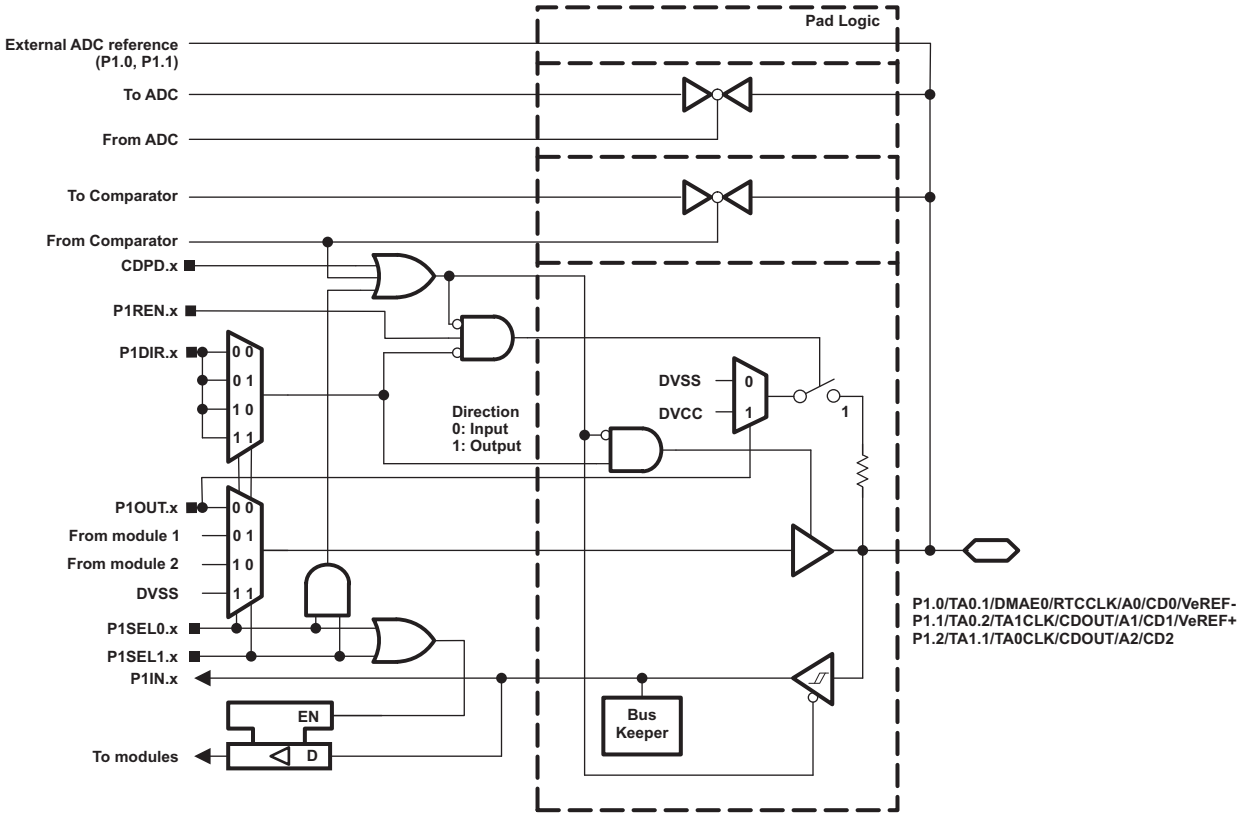

Copyright © 2014, Texas Instruments Incorporated

Table 6-1. Port P1 (P1.0 to P1.2) Pin Functions

PIN NAME (P1.x)	x	FUNCTION	CONTROL BITS/SIGNALS		
			P1DIR.x	P1SEL1.x	P1SEL0.x
P1.0/TA0.1/DMAE0/RTCCLK/A0/CD0/VeREF-	0	P1.0 (I/O)	I: 0; O: 1	0	0
		TA0.CCI1A	0	0	1
		TA0.1	1		
		DMAE0	0	1	0
		RTCCLK	1		
		A0 (1) (2) CD0 (1) (3) VeREF- (1) (2)	X	1	1
P1.1/TA0.2/TA1CLK/CDOUT/A1/CD1/VeREF+	1	P1.1 (I/O)	I: 0; O: 1	0	0
		TA0.CCI2A	0	0	1
		TA0.2	1		
		TA1CLK	0	1	0
		CDOUT	1		
		A1 (1) (2) CD1 (1) (3) VeREF+ (1) (2)	X	1	1
P1.2/TA1.1/TA0CLK/CDOUT/A2/CD2	2	P1.2 (I/O)	I: 0; O: 1	0	0
		TA1.CCI1A	0	0	1
		TA1.1	1		
		TA0CLK	0	1	0
		CDOUT	1		
		A2 (1) (2) CD2 (1) (3)	X	1	1

(1) Setting P1SEL1.x and P1SEL0.x disables the output driver as well as the input Schmitt trigger to prevent parasitic cross currents when applying analog signals.
(2) Not available on all devices and package types.
(3) Setting the CDPD.x bit of the comparator disables the output driver as well as the input Schmitt trigger to prevent parasitic cross currents when applying analog signals. Selecting the CDx input pin to the comparator multiplexer with the CDx bits automatically disables output driver and input buffer for that pin, regardless of the state of the associated CDPD.x bit.

Copyright © 2014, Texas Instruments Incorporated

6.2 Port P1, P1.3 to P1.5, Input/Output With Schmitt Trigger

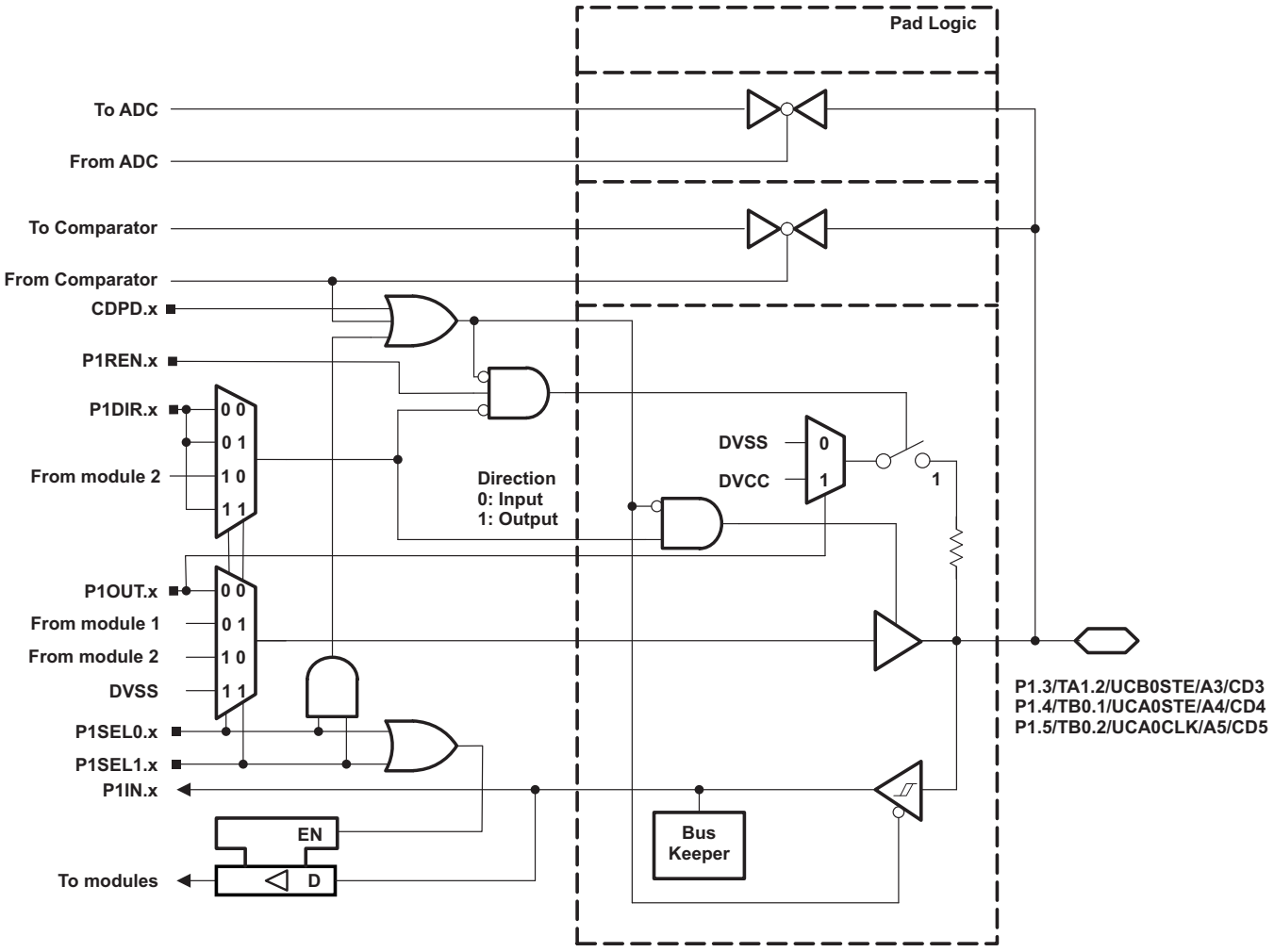

Copyright © 2014, Texas Instruments Incorporated

Table 6-2. Port P1 (P1.3 to P1.5) Pin Functions

PIN NAME (P1.x)	x	FUNCTION	CONTROL BITS/SIGNALS		
			P1DIR.x	P1SEL1.x	P1SEL0.x
P1.3/TA1.2/UCB0STE/A3/CD3	3	P1.3 (I/O)	I: 0; O: 1	0	0
		TA1.CCI2A	0	0	1
		TA1.2	1		
		UCB0STE	X (1)	1	0
		A3 (2) (3) CD3 (2) (4)	X	1	1
P1.4/TB0.1/UCA0STE/A4/CD4	4	P1.4 (I/O)	I: 0; O: 1	0	0
		TB0.CCI1A	0	0	1
		TB0.1	1		
		UCA0STE	X (5)	1	0
		A4 (2) (3) CD4 (2) (4)	X	1	1
P1.5/TB0.2/UCA0CLK/A5/CD5	5	P1.5(I/O)	I: 0; O: 1	0	0
		TB0.CCI2A	0	0	1
		TB0.2	1		
		UCA0CLK	X (5)	1	0
		A5 (2) (3) CD5 (2) (4)	X	1	1

(1) Direction controlled by eUSCI_B0 module.
(2) Setting P1SEL1.x and P1SEL0.x disables the output driver and the input Schmitt trigger to prevent parasitic cross currents when applying analog signals.
(3) Not available on all devices and package types.
(4) Setting the CDPD.x bit of the comparator disables the output driver and the input Schmitt trigger to prevent parasitic cross currents when applying analog signals. Selecting the CDx input pin to the comparator multiplexer with the CDx bits automatically disables output driver and input buffer for that pin, regardless of the state of the associated CDPD.x bit
(5) Direction controlled by eUSCI_A0 module.

Copyright © 2014, Texas Instruments Incorporated

6.3 Port P1, P1.6 to P1.7, Input/Output With Schmitt Trigger

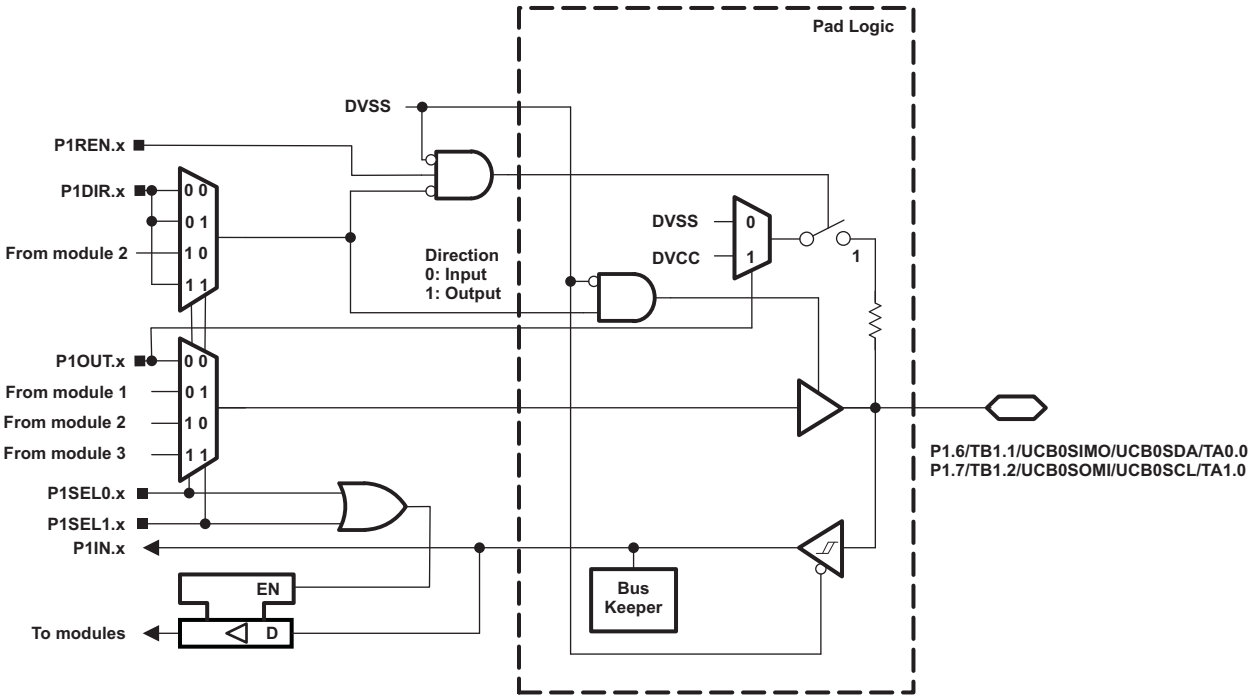

Table 6-3. Port P1 (P1.6 to P1.7) Pin Functions

PIN NAME (P1.x)	x	FUNCTION	CONTROL BITS/SIGNALS		
			P1DIR.x	P1SEL1.x	P1SEL0.x
P1.6/TB1.1/UCB0SIMO/UCB0SDA/TA0.0	6	P1.6 (I/O)	I: 0; O: 1	0	0
		TB1.CCI1A (1)	0	0	1
		TB1.1 (1)	1		
		UCB0SIMO/UCB0SDA	X (2)	1	0
		TA0.CCI0A	0	1	1
		TA0.0	1		
P1.7/TB1.2/UCB0SOMI/UCB0SCL/TA1.0	7	P1.7 (I/O)	I: 0; O: 1	0	0
		TB1.CCI2A (1)	0	0	1
		TB1.2 (1)	1		
		UCB0SOMI/UCB0SCL	X (2)	1	0
		TA1.CCI0A	0	1	1
		TA1.0	1		

(1) Not available on all devices and package types.
(2) Direction controlled by eUSCI_B0 module.

Copyright © 2014, Texas Instruments Incorporated

6.4 Port P2, P2.0 to P2.2, Input/Output With Schmitt Trigger

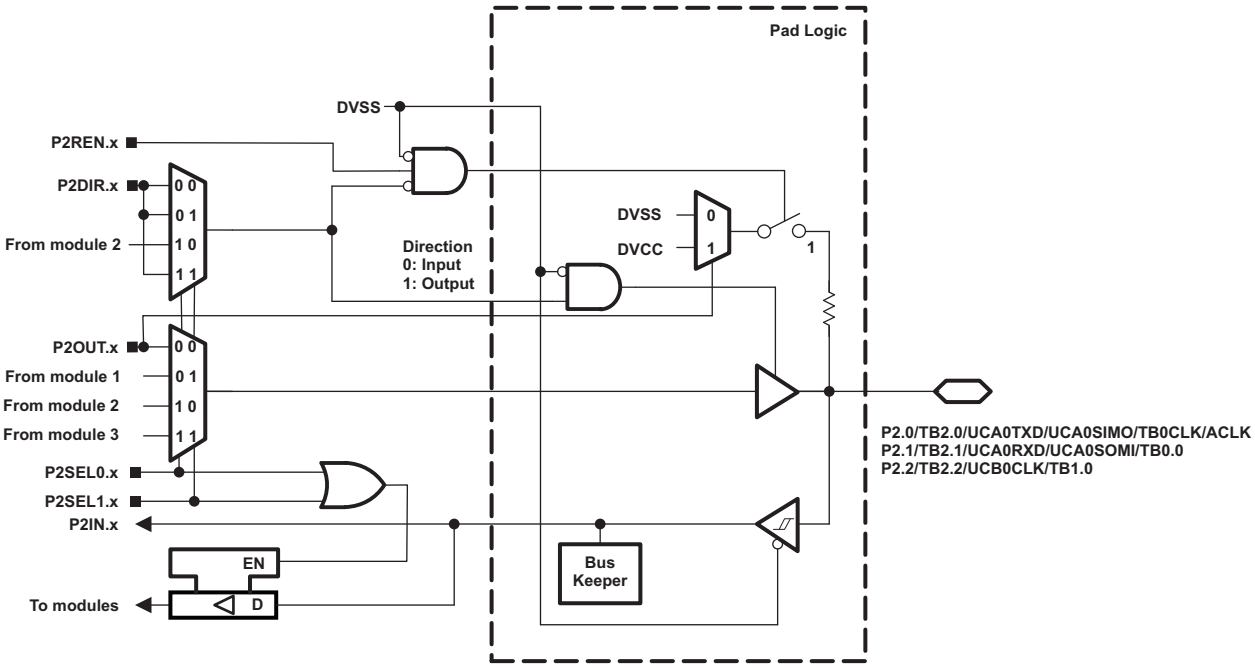

Table 6-4. Port P2 (P2.0 to P2.2) Pin Functions

PIN NAME (P2.x)	x	FUNCTION	CONTROL BITS/SIGNALS		
			P2DIR.x	P2SEL1.x	P2SEL0.x
P2.0/TB2.0/UCA0TXD/UCA0SIMO/TB0CLK/ACLK	0	P2.0 (I/O)	I: 0; O: 1	0	0
		TB2.CCI0A (1)	0	0	1
		TB2.0 (1)	1		
		UCA0TXD/UCA0SIMO	X (2)	1	0
		TB0CLK	0	1	1
		ACLK	1		
P2.1/TB2.1/UCA0RXD/UCA0SOMI/TB0.0	1	P2.1 (I/O)	I: 0; O: 1	0	0
		TB2.CCI1A (1)	0	0	1
		TB2.1 (1)	1		
		UCA0RXD/UCA0SOMI	X (2)	1	0
		TB0.CCI0A	0	1	1
		TB0.0	1		
P2.2/TB2.2/UCB0CLK/TB1.0	2	P2.2 (I/O)	I: 0; O: 1	0	0
		TB2.CCI2A (1)	0	0	1
		TB2.2 (1)	1		
		UCB0CLK	X (3)	1	0
		TB1.CCI0A (1)	0	1	1
		TB1.0 (1)	1		

(1) Not available on all devices and package types.
(2) Direction controlled by eUSCI_A0 module.
(3) Direction controlled by eUSCI_B0 module.

Copyright © 2014, Texas Instruments Incorporated

6.5 Port P2, P2.3 to P2.4, Input/Output With Schmitt Trigger

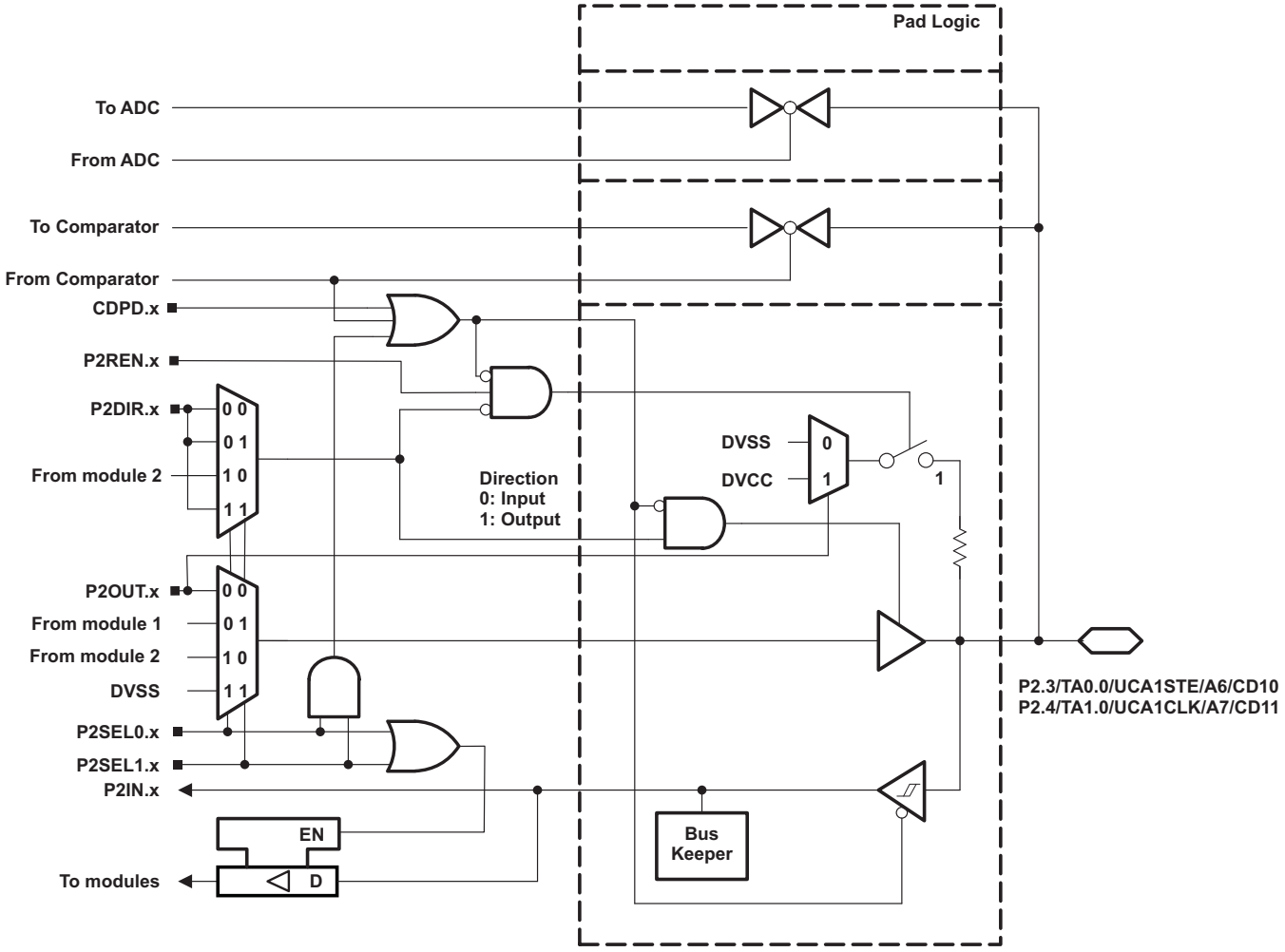

Copyright © 2014, Texas Instruments Incorporated

Table 6-5. Port P2 (P2.3 to P2.4) Pin Functions

PIN NAME (P2.x)	x	FUNCTION	CONTROL BITS/SIGNALS		
			P2DIR.x	P2SEL1.x	P2SEL0.x
P2.3/TA0.0/UCA1STE/A6/CD10	3	P2.3 (I/O)	I: 0; O: 1	0	0
		TA0.CCI0B	0	0	1
		TA0.0	1		
		UCA1STE	X (1)	1	0
		A6 (2) (3) CD10 (2) (4)	X	1	1
P2.4/TA1.0/UCA1CLK/A7/CD11	4	P2.4 (I/O)	I: 0; O: 1	0	0
		TA1.CCI0B	0	0	1
		TA1.0	1		
		UCA1CLK	X (1)	1	0
		A7 (2) (3) CD11 (2) (4)	X	1	1

(1) Direction controlled by eUSCI_A1 module.
(2) Setting P2SEL1.x and P2SEL0.x disables the output driver and the input Schmitt trigger to prevent parasitic cross currents when applying analog signals.
(3) Not available on all devices and package types.
(4) Setting the CDPD.x bit of the comparator disables the output driver and the input Schmitt trigger to prevent parasitic cross currents when applying analog signals. Selecting the CDx input pin to the comparator multiplexer with the CDx bits automatically disables output driver and input buffer for that pin, regardless of the state of the associated CDPD.x bit.

Copyright © 2014, Texas Instruments Incorporated

6.6 Port P2, P2.5 to P2.6, Input/Output With Schmitt Trigger

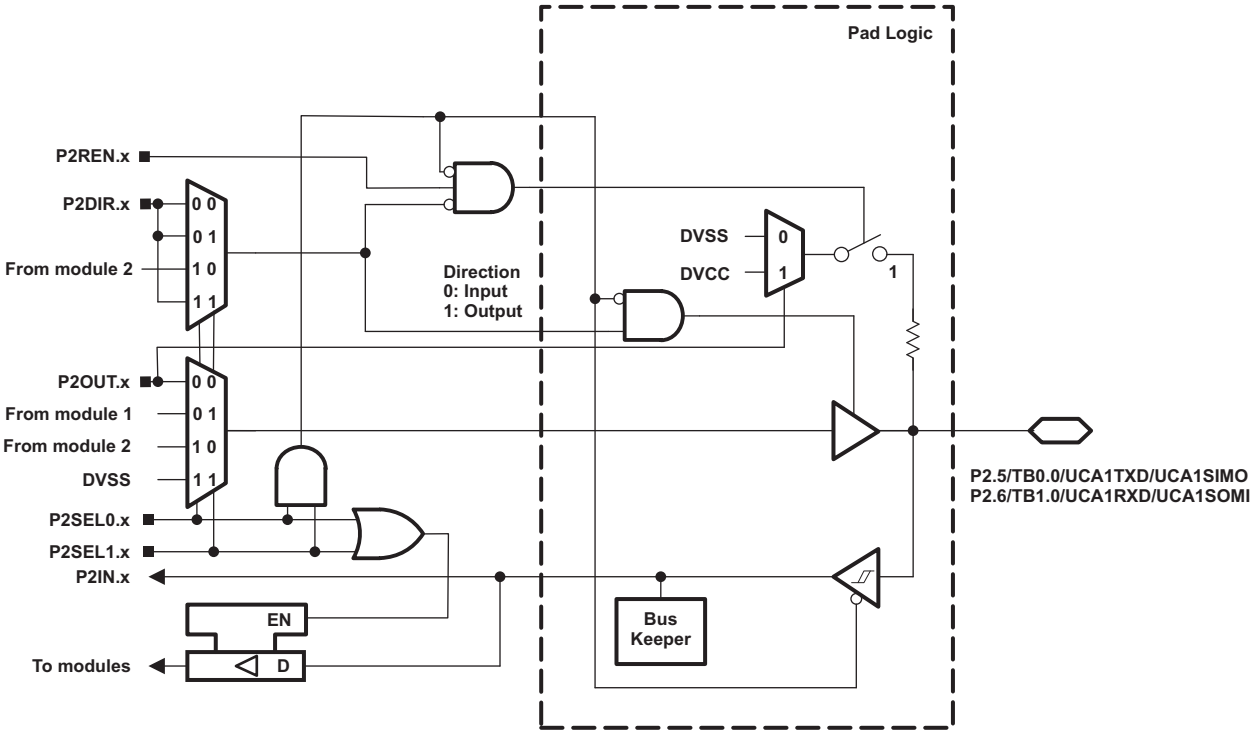

Table 6-6. Port P2 (P2.5 to P2.6) Pin Functions

PIN NAME (P2.x)	x	FUNCTION	CONTROL BITS/SIGNALS		
			P2DIR.x	P2SEL1.x	P2SEL0.x
P2.5/TB0.0/UCA1TXD/UCA1SIMO	5	P2.5(I/O) (1)	I: 0; O: 1	0	0
		TB0.CCI0B (1)	0	0	1
		TB0.0 (1)	1		
		UCA1TXD/UCA1SIMO (1)	X (2)	1	0
P2.6/TB1.0/UCA1RXD/UCA1SOMI	6	P2.6(I/O) (1)	I: 0; O: 1	0	0
		TB1.CCI0B (1)	0	0	1
		TB1.0 (1)	1		
		UCA1RXD/UCA1SOMI (1)	X (2)	1	0

(1) Not available on all devices and package types.
(2) Direction controlled by eUSCI_A1 module.

Copyright © 2014, Texas Instruments Incorporated

6.7 Port P2, P2.7, Input/Output With Schmitt Trigger

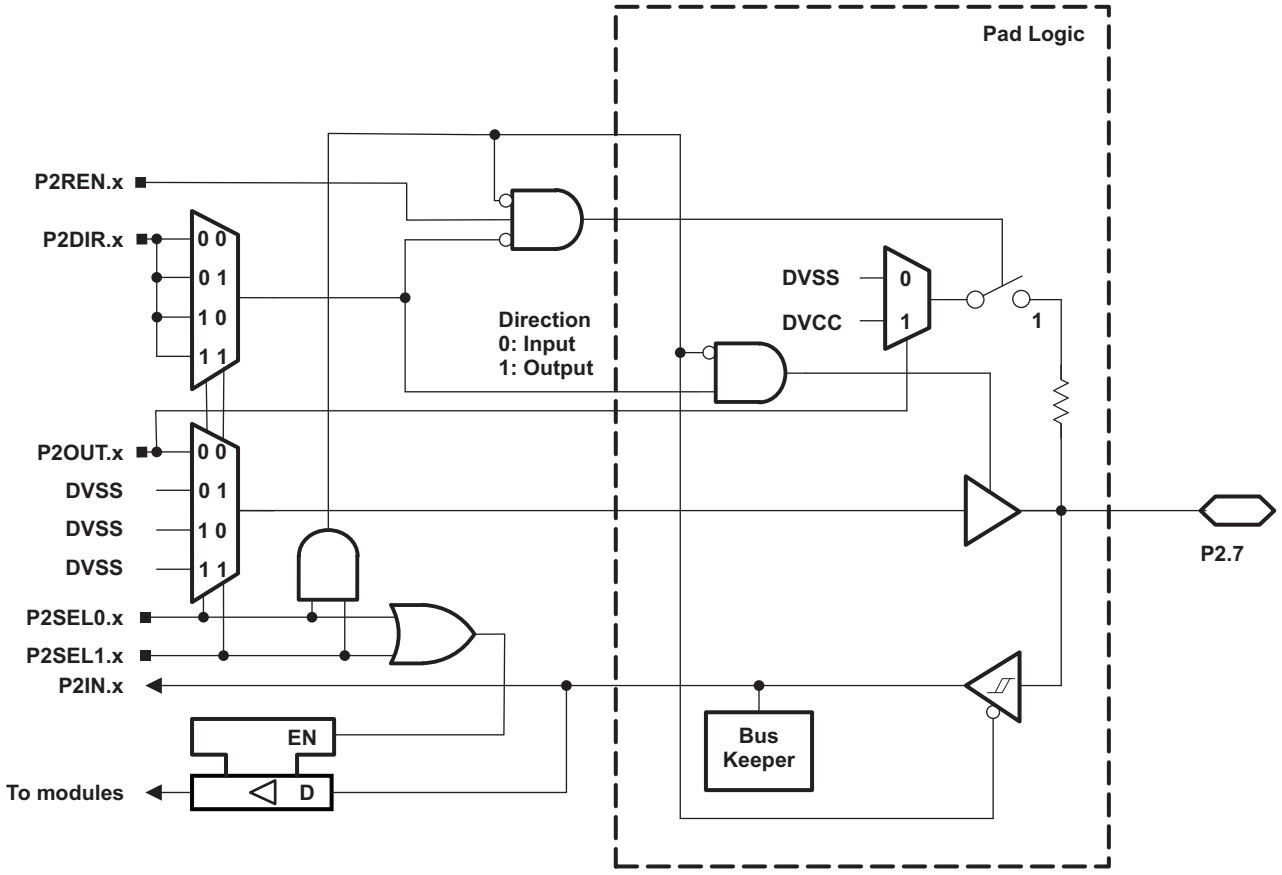

Table 6-7. Port P2 (P2.7) Pin Functions

PIN NAME (P2.x)	x	FUNCTION	CONTROL BITS/SIGNALS		
			P2DIR.x	P2SEL1.x	P2SEL0.x
P2.7	7	P2.7(I/O) (1)	I: 0; O: 1	0	0

(1) Not available on all devices and package types.

6.8 Port P3, P3.0 to P3.3, Input/Output With Schmitt Trigger

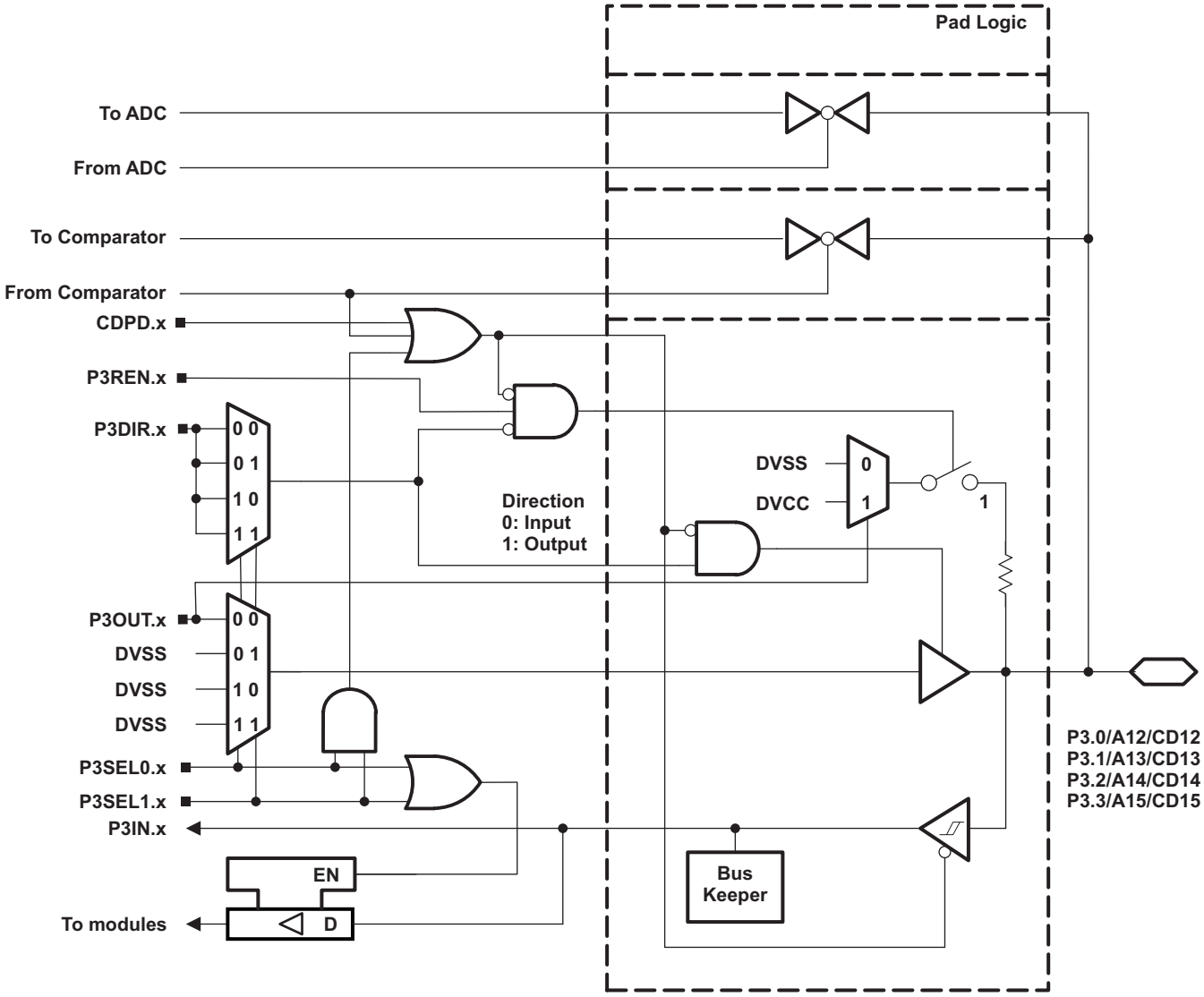

Copyright © 2014, Texas Instruments Incorporated

Table 6-8. Port P3 (P3.0 to P3.3) Pin Functions

PIN NAME (P3.x)	x	FUNCTION	CONTROL BITS/SIGNALS		
			P3DIR.x	P3SEL1.x	P3SEL0.x
P3.0/A12/CD12	0	P3.0 (I/O)	I: 0; O: 1	0	0
		A12 (1) (2) CD12 (1) (3)	X	1	1
P3.1/A13/CD13	1	P3.1 (I/O)	I: 0; O: 1	0	0
		A13 (1) (2) CD13 (1) (3)	X	1	1
P3.2/A14/CD14	2	P3.2 (I/O)	I: 0; O: 1	0	0
		A14 (1) (2) CD14 (1) (3)	X	1	1
P3.3/A15/CD15	3	P3.3 (I/O)	I: 0; O: 1	0	0
		A15 (1) (2) CD15 (1) (3)	X	1	1

(1) Setting P1SEL1.x and P1SEL0.x disables the output driver and the input Schmitt trigger to prevent parasitic cross currents when applying analog signals.
(2) Not available on all devices and package types.
(3) Setting the CDPD.x bit of the comparator disables the output driver and the input Schmitt trigger to prevent parasitic cross currents when applying analog signals. Selecting the CDx input pin to the comparator multiplexer with the CDx bits automatically disables output driver and input buffer for that pin, regardless of the state of the associated CDPD.x bit.

Copyright © 2014, Texas Instruments Incorporated

6.9 Port P3, P3.4 to P3.6, Input/Output With Schmitt Trigger

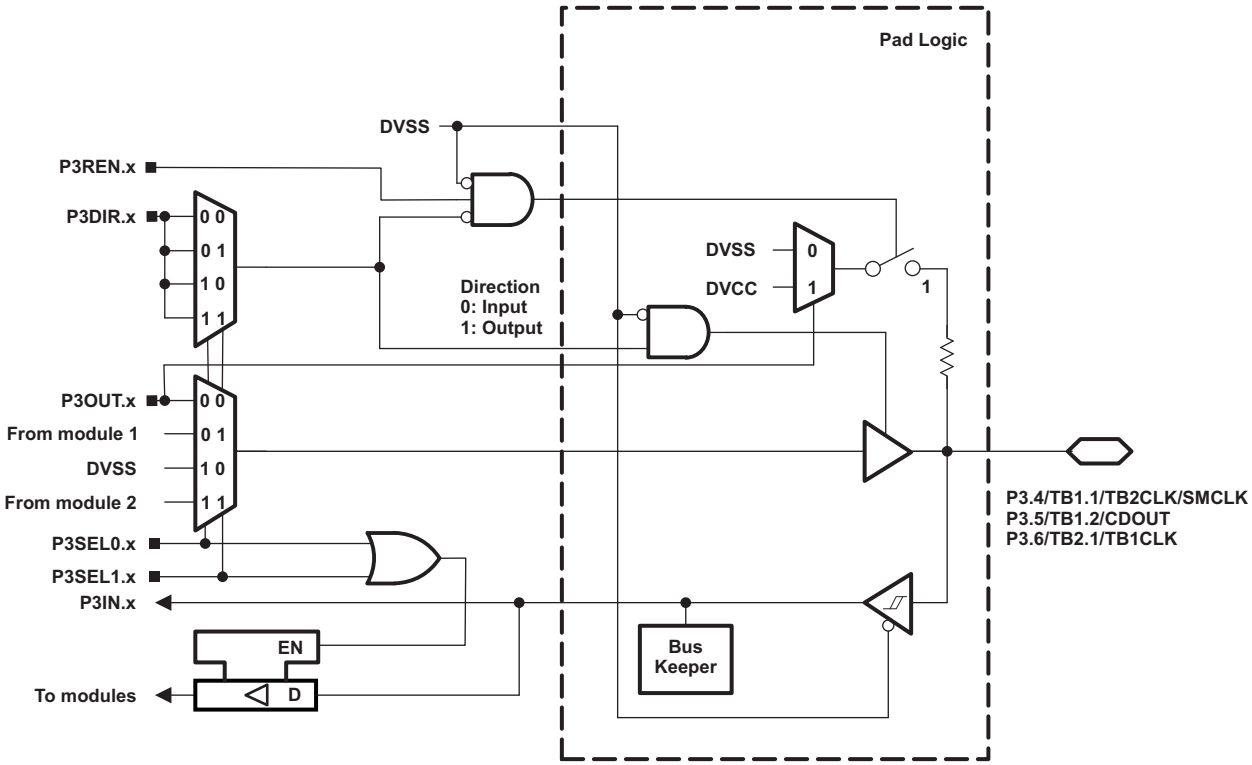

Table 6-9. Port P3 (P3.4 to P3.6) Pin Functions

PIN NAME (P3.x)	x	FUNCTION	CONTROL BITS/SIGNALS		
			P3DIR.x	P3SEL1.x	P3SEL0.x
P3.4/TB1.1/TB2CLK/SMCLK	4	P3.4 (I/O) (1)	I: 0; O: 1	0	0
		TB1.CCI1B (1)	0	0	1
		TB1.1 (1)	1		
		TB2CLK (1)	0	1	1
		SMCLK (1)	1		
P3.5/TB1.2/CDOUT	5	P3.5 (I/O) (1)	I: 0; O: 1	0	0
		TB1.CCI2B (1)	0	0	1
		TB1.2 (1)	1		
		CDOUT (1)	1	1	1
P3.6/TB2.1/TB1CLK	6	P3.6 (I/O) (1)	I: 0; O: 1	0	0
		TB2.CCI1B (1)	0	0	1
		TB2.1 (1)	1		
		TB1CLK (1)	0	1	1

(1) Not available on all devices and package types.

Copyright © 2014, Texas Instruments Incorporated

6.10 Port P3, P3.7, Input/Output With Schmitt Trigger

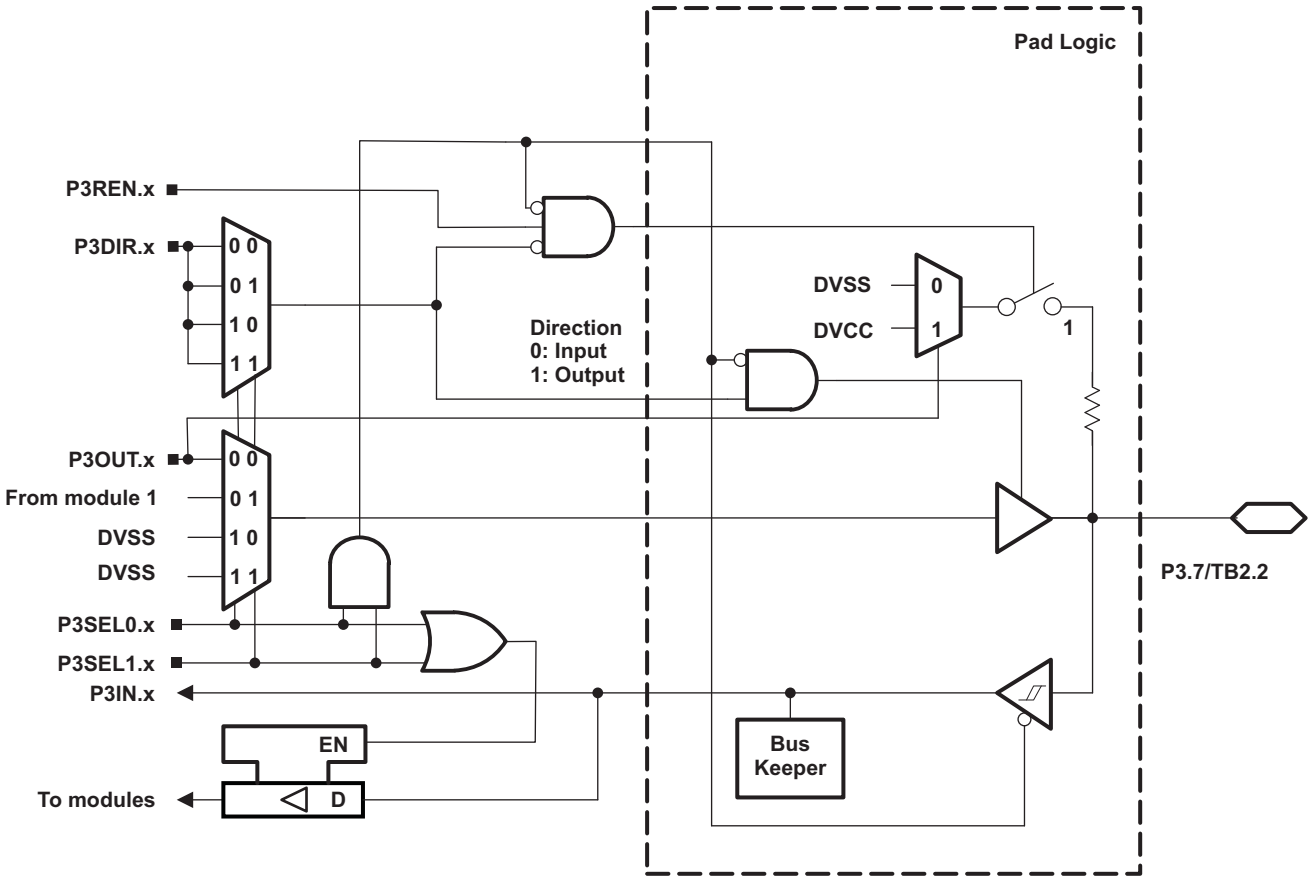

Table 6-10. Port P3 (P3.7) Pin Functions

PIN NAME (P3.x)	x	FUNCTION	CONTROL BITS/SIGNALS		
			P3DIR.x	P3SEL1.x	P3SEL0.x
P3.7/TB2.2	7	P3.7 (I/O) (1)	I: 0; O: 1	0	0
		TB2.CCI2B (1)	0	0	1
		TB2.2 (1)	1		

(1) Not available on all devices and package types.

6.11 Port P4, P4.0, Input/Output With Schmitt Trigger

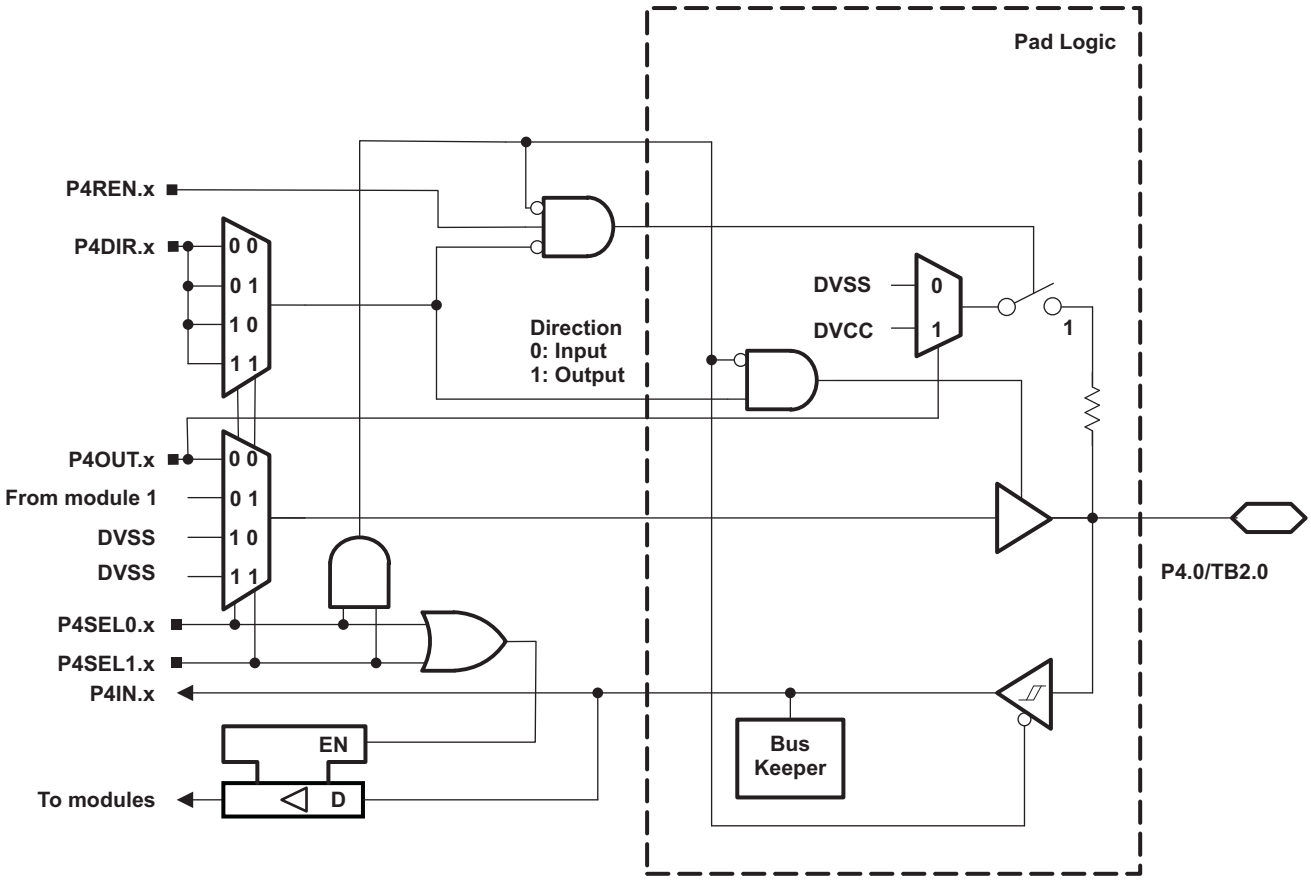

Table 6-11. Port P4 (P4.0) Pin Functions

PIN NAME (P4.x)	x	FUNCTION	CONTROL BITS/SIGNALS		
			P4DIR.x	P4SEL1.x	P4SEL0.x
P4.0/TB2.0	0	P4.0 (I/O) (1)	I: 0; O: 1	0	0
		TB2.CCI0B (1)	0	0	1
		TB2.0 (1)	1		

(1) Not available on all devices and package types.

Copyright © 2014, Texas Instruments Incorporated

6.12 Port P4, P4.1, Input/Output With Schmitt Trigger

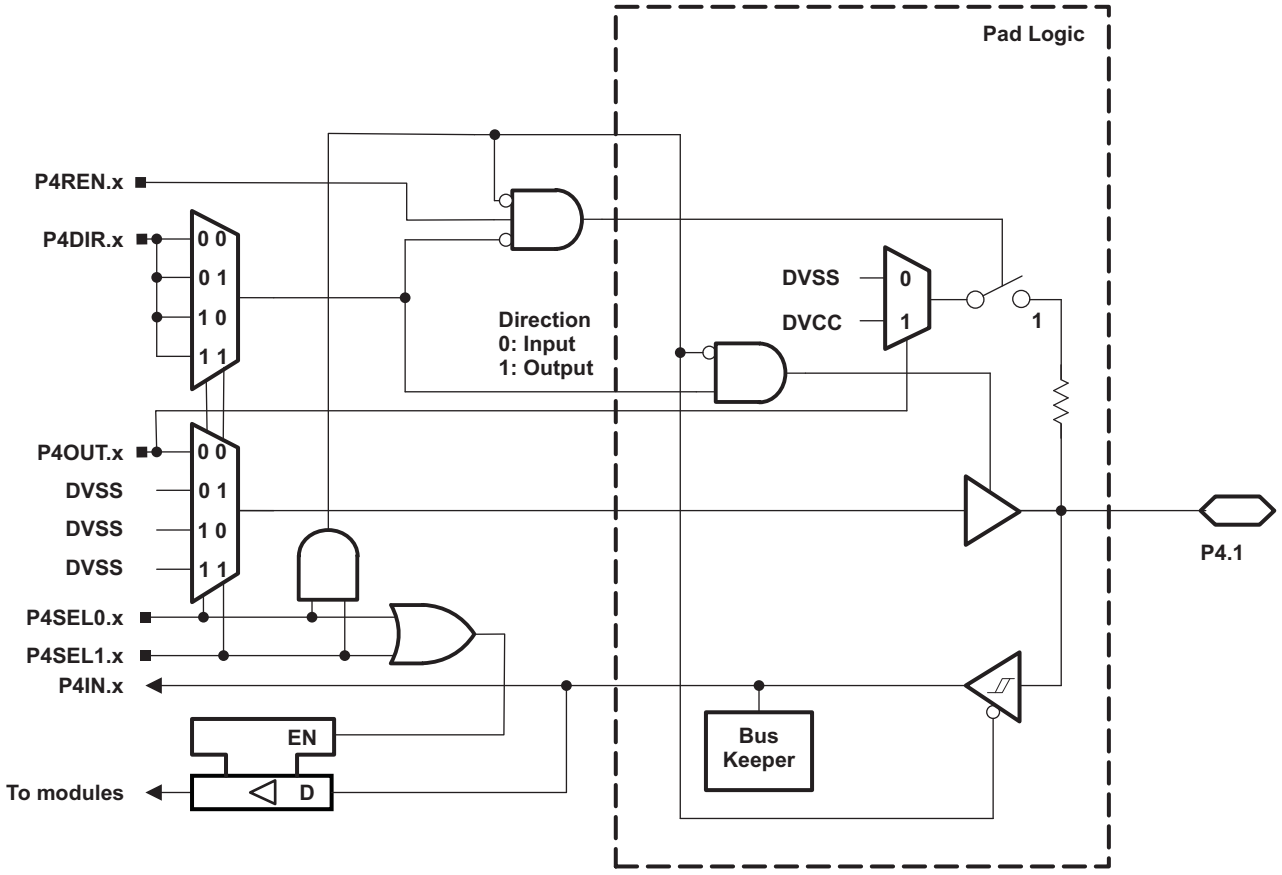

Table 6-12. Port P4 (P4.1) Pin Functions

PIN NAME (P4.x)	x	FUNCTION	CONTROL BITS/SIGNALS		
			P4DIR.x	P4SEL1.x	P4SEL0.x
P4.1	1	P4.1 (I/O) (1)	I: 0; O: 1	0	0

(1) Not available on all devices and package types.

6.13 Port J, J.0 to J.3 JTAG pins TDO, TMS, TCK, TDI/TCLK, Input/Output With Schmitt Trigger or Output

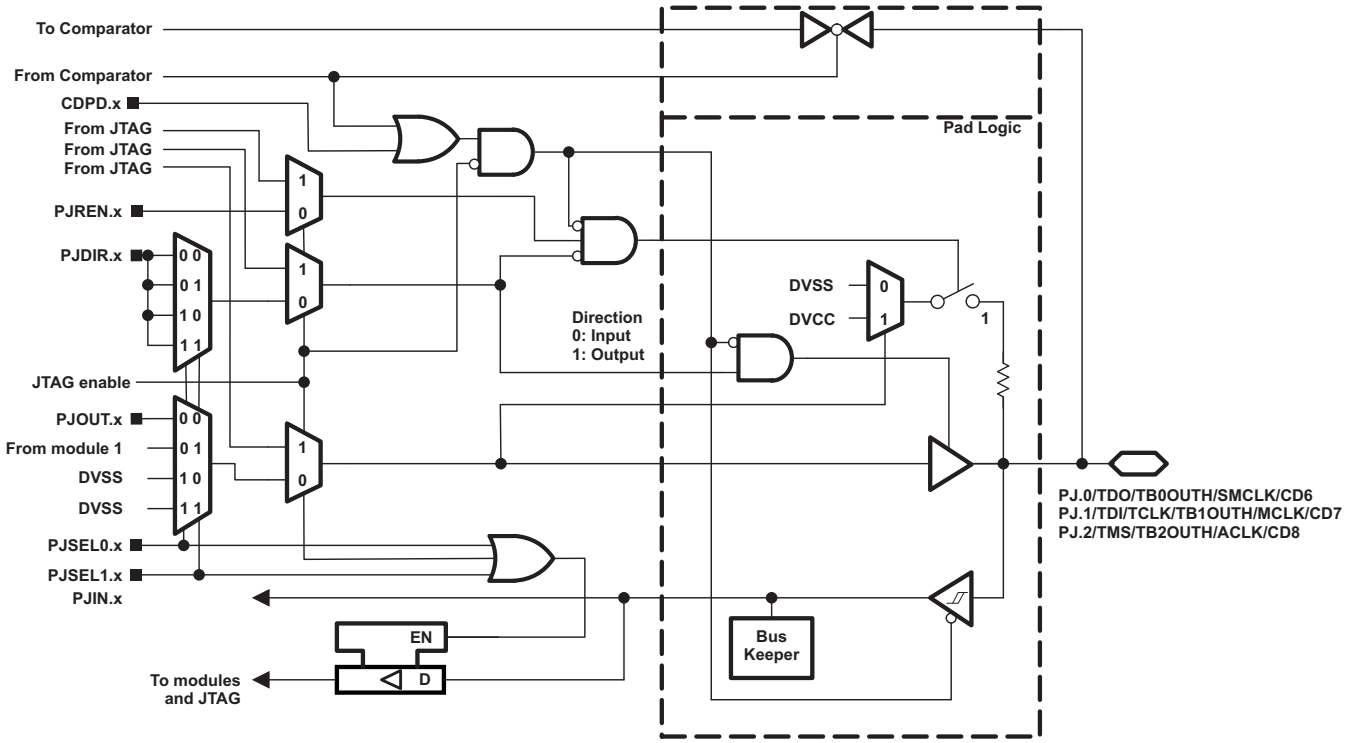

Copyright © 2014, Texas Instruments Incorporated

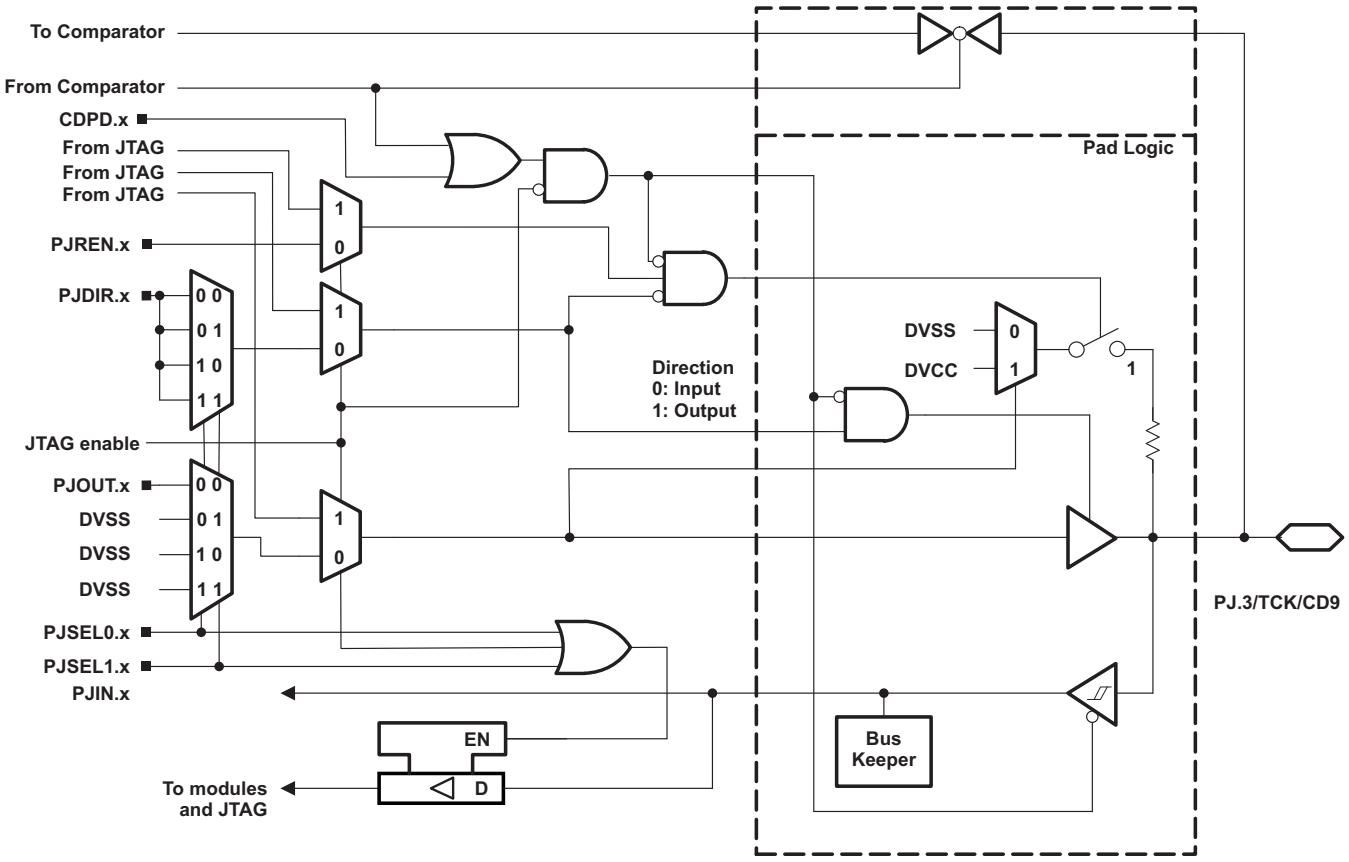
To Comparator
From Comparator
CDPD.x
From JTAG
From JTAG
From JTAG
PJREN.x
PJDIR.x
0 0
0 1
1 0
1 1
JTAG enable
PJOUT.x
DVSS
DVSS
DVSS
PJSEL0.x
PJSEL1.x
PJIN.x
1
0
EN
D
To modules and JTAG
Direction 0: Input 1: Output
Pad Logic
DVSS
DVCC
Bus Keeper
PJ.3/TCK/CD9

Table 6-13. Port PJ (PJ.0 to PJ.3) Pin Functions

PIN NAME (PJ.x)	x	FUNCTION	CONTROL BITS/ SIGNALS (1)		
			PJDIR.x	PJSEL1.x	PJSEL0.x
PJ.0/TDO/TB0OUTH/SMCLK/CD6	0	PJ.0 (I/O) (2)	I: 0; O: 1	0	0
		TDO (3)	X	X	X
		TB0OUTH	0	0	1
		SMCLK	1		
		CD6	X	1	1
PJ.1/TDI/TCLK/TB1OUTH/MCLK/CD7	1	PJ.1 (I/O) (2)	I: 0; O: 1	0	0
		TDI/TCLK (3) (4)	X	X	X
		TB1OUTH	0	0	1
		MCLK	1		
		CD7	X	1	1
PJ.2/TMS/TB2OUTH/ACLK/CD8	2	PJ.2 (I/O) (2)	I: 0; O: 1	0	0
		TMS (3) (4)	X	X	X
		TB2OUTH	0	0	1
		ACLK	1		
		CD8	X	1	1
PJ.3/TCK/CD9	3	PJ.3 (I/O) (2)	I: 0; O: 1	0	0
		TCK (3) (4)	X	X	X
		CD9	X	1	1

(1) X = Don't care
(2) Default condition
(3) The pin direction is controlled by the JTAG module. JTAG mode selection is made by the SYS module or by the Spy-Bi-Wire four-wire entry sequence. PJSEL1.x and PJSEL0.x have no effect in these cases.
(4) In JTAG mode, pullups are activated automatically on TMS, TCK, and TDI/TCLK. PJREN.x are do not care.

Copyright © 2014, Texas Instruments Incorporated

6.14 Port PJ, PJ.4 and PJ.5 Input/Output With Schmitt Trigger

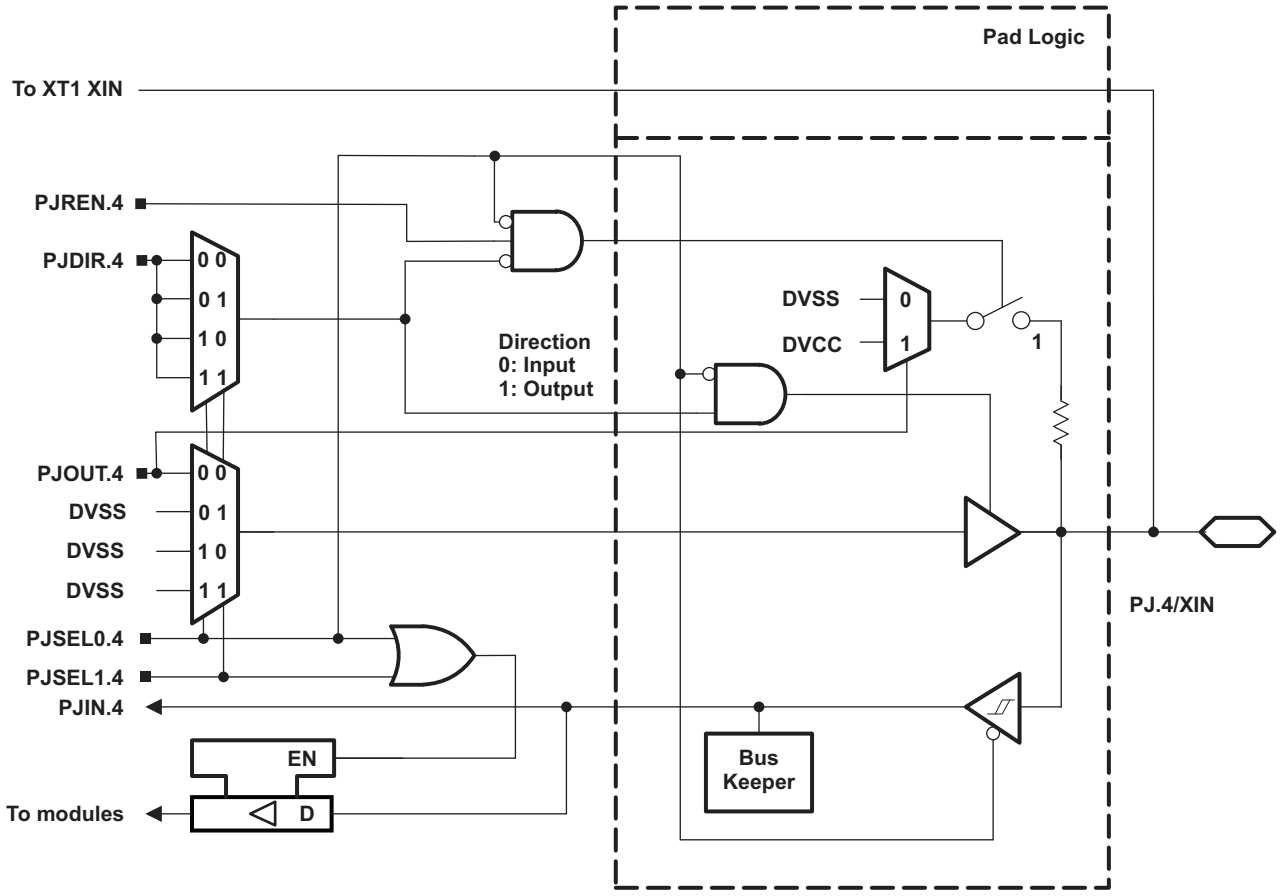

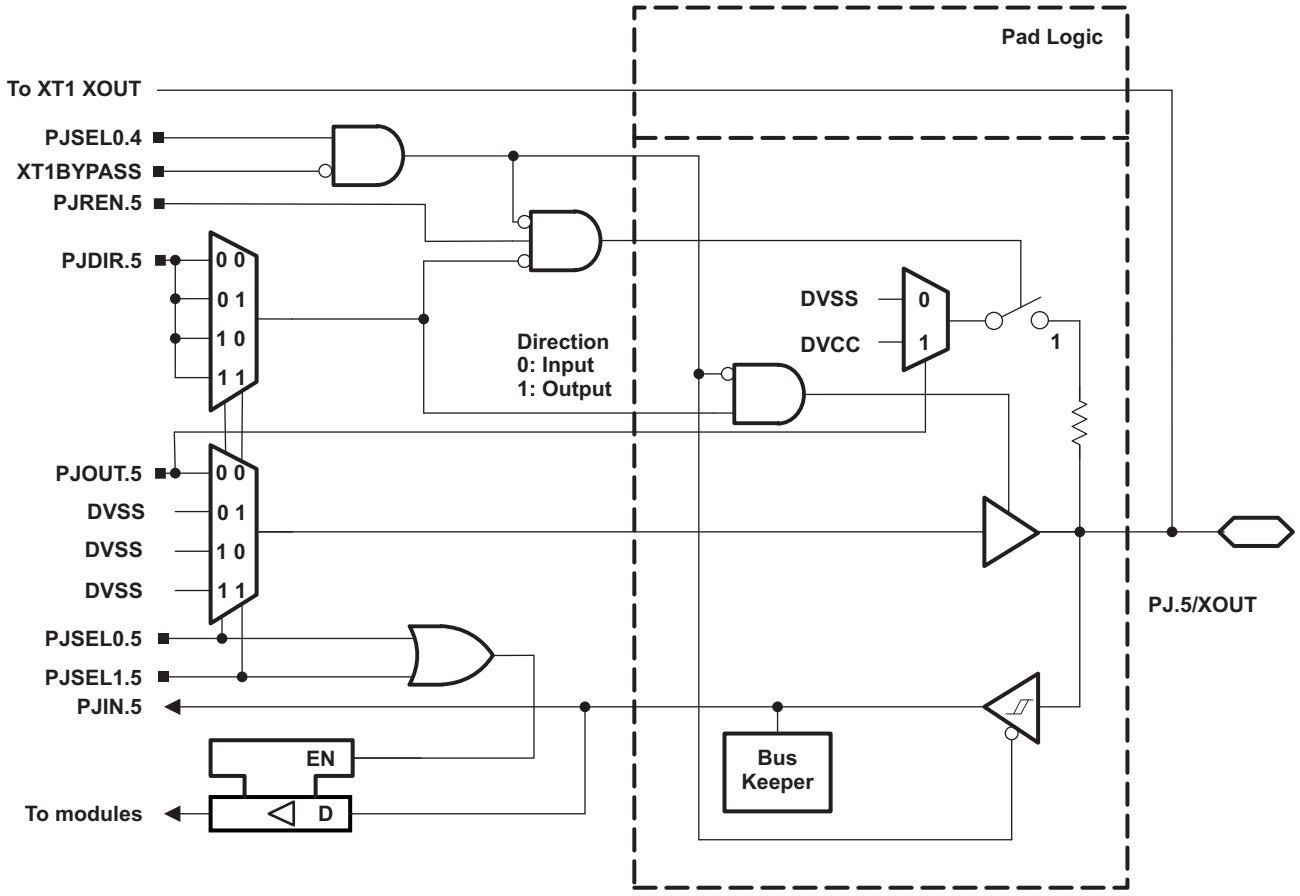

Table 6-14. Port PJ (PJ.4 and PJ.5) Pin Functions

PIN NAME (P7.x)	x	FUNCTION	CONTROL BITS/SIGNALS (1)					
			PJDIR.x	PJSEL1.5	PJSEL0.5	PJSEL1.4	PJSEL0.4	XT1 BYPASS
PJ.4/XIN	4	PJ.4 (I/O)	I: 0; O: 1	X	X	0	0	X
		XIN crystal mode (2)	X	X	X	0	1	0
		XIN bypass mode (2)	X	X	X	0	1	1
PJ.5/XOUT	5	PJ.5 (I/O)	I: 0; O: 1	0	0	0	0	X
		XOUT crystal mode (2)	X	X	X	0	1	0
		PJ.5 (I/O) (3)	I: 0; O: 1	X	X	0	1	1

(1) X = Don't care
(2) Setting PJSEL1.4 = 0 and PJSEL0.4 = 1 causes the general-purpose I/O to be disabled. When XT1BYPASS = 0, PJ.4 and PJ.5 are configured for crystal operation and PJSEL1.5 and PJSEL0.5 are do not care. When XT1BYPASS = 1, PJ.4 is configured for bypass operation and PJ.5 is configured as general-purpose I/O.
(3) When PJ.4 is configured in bypass mode, PJ.5 is configured as general-purpose I/O.

Copyright © 2014, Texas Instruments Incorporated

7 Device Descriptors (TLV)

Table 7-1 and Table 7-2 list the complete contents of the device descriptor tag-length-value (TLV) structure for each device type.

Table 7-1. Device Descriptor Table (1)

	Description	Address	FR5739	FR5738	FR5737	FR5736	FR5735
			Value	Value	Value	Value	Value
Info Block	Info length	01A00h	05h	05h	05h	05h	05h
	CRC length	01A01h	05h	05h	05h	05h	05h
	CRC value	01A02h	per unit	per unit	per unit	per unit	per unit
		01A03h	per unit	per unit	per unit	per unit	per unit
	Device ID	01A04h	03h	02h	01h	77h	76h
	Device ID	01A05h	81h	81h	81h	81h	81h
	Hardware revision	01A06h	per unit	per unit	per unit	per unit	per unit
	Firmware revision	01A07h	per unit	per unit	per unit	per unit	per unit
Die Record	Die Record Tag	01A08h	08h	08h	08h	08h	08h
	Die Record length	01A09h	0Ah	0Ah	0Ah	0Ah	0Ah
	Lot/Wafer ID	01A0Ah	per unit	per unit	per unit	per unit	per unit
		01A0Bh	per unit	per unit	per unit	per unit	per unit
		01A0Ch	per unit	per unit	per unit	per unit	per unit
		01A0Dh	per unit	per unit	per unit	per unit	per unit
	Die X position	01A0Eh	per unit	per unit	per unit	per unit	per unit
		01A0Fh	per unit	per unit	per unit	per unit	per unit
	Die Y position	01A10h	per unit	per unit	per unit	per unit	per unit
		01A11h	per unit	per unit	per unit	per unit	per unit
	Test results	01A12h	per unit	per unit	per unit	per unit	per unit
		01A13h	per unit	per unit	per unit	per unit	per unit
ADC10 Calibration	ADC10 Calibration Tag	01A14h	13h	13h	13h	05h	13h
	ADC10 Calibration length	01A15h	10h	10h	10h	10h	10h
	ADC Gain Factor	01A16h	per unit	per unit	NA	NA	per unit
		01A17h	per unit	per unit	NA	NA	per unit
	ADC Offset	01A18h	per unit	per unit	NA	NA	per unit
		01A19h	per unit	per unit	NA	NA	per unit
	ADC 1.5-V Reference Temp. Sensor 30°C	01A1Ah	per unit	per unit	NA	NA	per unit
		01A1Bh	per unit	per unit	NA	NA	per unit
	ADC 1.5-V Reference Temp. Sensor 85°C	01A1Ch	per unit	per unit	NA	NA	per unit
		01A1Dh	per unit	per unit	NA	NA	per unit
	ADC 2.0-V Reference Temp. Sensor 30°C	01A1Eh	per unit	per unit	NA	NA	per unit
		01A1Fh	per unit	per unit	NA	NA	per unit
	ADC 2.0-V Reference Temp. Sensor 85°C	01A20h	per unit	per unit	NA	NA	per unit
		01A21h	per unit	per unit	NA	NA	per unit
	ADC 2.5-V Reference Temp. Sensor 30°C	01A22h	per unit	per unit	NA	NA	per unit
		01A23h	per unit	per unit	NA	NA	per unit

(1) NA = Not applicable

Copyright © 2014, Texas Instruments Incorporated

Table 7-1. Device Descriptor Table (1) (continued)

	Description	Address	FR5739	FR5738	FR5737	FR5736	FR5735
			Value	Value	Value	Value	Value
	ADC 2.5-V Reference Temp. Sensor 85°C	01A24h	per unit	per unit	NA	NA	per unit
		01A25h	per unit	per unit	NA	NA	per unit
REF Calibration	REF Calibration Tag	01A26h	12h	12h	12h	12h	12h
	REF Calibration length	01A27h	06h	06h	06h	06h	06h
	REF 1.5-V Reference	01A28h	per unit	per unit	per unit	per unit	per unit
		01A29h	per unit	per unit	per unit	per unit	per unit
	REF 2.0-V Reference	01A2Ah	per unit	per unit	per unit	per unit	per unit
		01A2Bh	per unit	per unit	per unit	per unit	per unit
	REF 2.5-V Reference	01A2Ch	per unit	per unit	per unit	per unit	per unit
		01A2Dh	per unit	per unit	per unit	per unit	per unit

Table 7-2. Device Descriptor Table (1)

	Description	Address	FR5734	FR5733	FR5732	FR5731	FR5730
			Value	Value	Value	Value	Value
Info Block	Info length	01A00h	05h	05h	05h	05h	05h
	CRC length	01A01h	05h	05h	05h	05h	05h
	CRC value	01A02h	per unit	per unit	per unit	per unit	per unit
		01A03h	per unit	per unit	per unit	per unit	per unit
	Device ID	01A04h	00h	7Fh	75h	7Eh	7Ch
	Device ID	01A05h	81h	80h	81h	80h	80h
	Hardware revision	01A06h	per unit	per unit	per unit	per unit	per unit
	Firmware revision	01A07h	per unit	per unit	per unit	per unit	per unit
Die Record	Die Record Tag	01A08h	08h	08h	08h	08h	08h
	Die Record length	01A09h	0Ah	0Ah	0Ah	0Ah	0Ah
	Lot/Wafer ID	01A0Ah	per unit	per unit	per unit	per unit	per unit
		01A0Bh	per unit	per unit	per unit	per unit	per unit
		01A0Ch	per unit	per unit	per unit	per unit	per unit
		01A0Dh	per unit	per unit	per unit	per unit	per unit
	Die X position	01A0Eh	per unit	per unit	per unit	per unit	per unit
		01A0Fh	per unit	per unit	per unit	per unit	per unit
	Die Y position	01A10h	per unit	per unit	per unit	per unit	per unit
		01A11h	per unit	per unit	per unit	per unit	per unit
	Test results	01A12h	per unit	per unit	per unit	per unit	per unit
		01A13h	per unit	per unit	per unit	per unit	per unit
ADC10 Calibration	ADC10 Calibration Tag	01A14h	13h	13h	13h	05h	13h
	ADC10 Calibration length	01A15h	10h	10h	10h	10h	10h
	ADC Gain Factor	01A16h	per unit	NA	NA	per unit	per unit
		01A17h	per unit	NA	NA	per unit	per unit
	ADC Offset	01A18h	per unit	NA	NA	per unit	per unit
		01A19h	per unit	NA	NA	per unit	per unit
	ADC 1.5-V Reference Temp. Sensor 30°C	01A1Ah	per unit	NA	NA	per unit	per unit
		01A1Bh	per unit	NA	NA	per unit	per unit

(1) NA = Not applicable

Copyright © 2014, Texas Instruments Incorporated

Table 7-2. Device Descriptor Table [(1)] (continued)

	Description	Address	FR5734	FR5733	FR5732	FR5731	FR5730
			Value	Value	Value	Value	Value
	ADC 1.5-V Reference Temp. Sensor 85°C	01A1Ch	per unit	NA	NA	per unit	per unit
		01A1Dh	per unit	NA	NA	per unit	per unit
	ADC 2.0-V Reference Temp. Sensor 30°C	01A1Eh	per unit	NA	NA	per unit	per unit
		01A1Fh	per unit	NA	NA	per unit	per unit
	ADC 2.0-V Reference Temp. Sensor 85°C	01A20h	per unit	NA	NA	per unit	per unit
		01A21h	per unit	NA	NA	per unit	per unit
	ADC 2.5-V Reference Temp. Sensor 30°C	01A22h	per unit	NA	NA	per unit	per unit
		01A23h	per unit	NA	NA	per unit	per unit
	ADC 2.5-V Reference Temp. Sensor 85°C	01A24h	per unit	NA	NA	per unit	per unit
		01A25h	per unit	NA	NA	per unit	per unit
REF Calibration	REF Calibration Tag	01A26h	12h	12h	12h	12h	12h
	REF Calibration length	01A27h	06h	06h	06h	06h	06h
	REF 1.5-V Reference	01A28h	per unit	per unit	per unit	per unit	per unit
		01A29h	per unit	per unit	per unit	per unit	per unit
	REF 2.0-V Reference	01A2Ah	per unit	per unit	per unit	per unit	per unit
		01A2Bh	per unit	per unit	per unit	per unit	per unit
	REF 2.5-V Reference	01A2Ch	per unit	per unit	per unit	per unit	per unit
		01A2Dh	per unit	per unit	per unit	per unit	per unit

版权 © 2014, Texas Instruments Incorporated

8 器件和文档支持

8.1 器件支持

8.1.1 开始使用

TI 还提供了立即入门必备的所有硬件平台和软件组件以及工具！ 不仅如此，TI 还拥有众多辅助组件以满足您的需求。 要获得 MSP430™ MCU 产品线、可用开发工具和评估套件，以及高级开发资源，请访问 MSP430 入门网页。

8.1.2 Development Tools Support

All MSP430™ microcontrollers are supported by a wide variety of software and hardware development tools. Tools are available from TI and various third parties. See them all at www.ti.com/msp430tools.

8.1.2.1 Hardware Features

See the *Code Composer Studio for MSP430 User's Guide* (SLAU157) for details on the available features.

MSP430 Architecture	4-Wire JTAG	2-Wire JTAG	Break-points (N)	Range Break-points	Clock Control	State Sequencer	Trace Buffer	LPMx.5 Debugging Support
MSP430Xv2	Yes	Yes	3	Yes	Yes	No	No	Yes

8.1.2.2 Recommended Hardware Options

8.1.2.2.1 Target Socket Boards

The target socket boards allow easy programming and debugging of the device using JTAG. They also feature header pin outs for prototyping. Target socket boards are orderable individually or as a kit with the JTAG programmer and debugger included. The following table shows the compatible target boards and the supported packages.

Package	Target Board and Programmer Bundle	Target Board Only
40-pin VQFN (RHA)	MSP-FET430U40A	MSP-TS430RHA40A

8.1.2.2.2 Experimenter Boards

Experimenter Boards and Evaluation kits are available for some MSP430 devices. These kits feature additional hardware components and connectivity for full system evaluation and prototyping. See www.ti.com/msp430tools for details.

8.1.2.2.3 Debugging and Programming Tools

Hardware programming and debugging tools are available from TI and from its third party suppliers. See the full list of available tools at www.ti.com/msp430tools.

8.1.2.2.4 Production Programmers

The production programmers expedite loading firmware to devices by programming several devices simultaneously.

Part Number	PC Port	Features	Provider
MSP-GANG	Serial and USB	Program up to eight devices at a time. Works with PC or standalone.	Texas Instruments

8.1.2.3 Recommended Software Options

8.1.2.3.1 Integrated Development Environments

Software development tools are available from TI or from third parties. Open source solutions are also available.

This device is supported by Code Composer Studio™ IDE (CCS).

版权 © 2014, Texas Instruments Incorporated

8.1.2.3.2 MSP430Ware

MSP430Ware is a collection of code examples, data sheets, and other design resources for all MSP430 devices delivered in a convenient package. In addition to providing a complete collection of existing MSP430 design resources, MSP430Ware also includes a high-level API called MSP430 Driver Library. This library makes it easy to program MSP430 hardware. MSP430Ware is available as a component of CCS or as a standalone package.

8.1.2.3.3 Command-Line Programmer

MSP430 Flasher is an open-source, shell-based interface for programming MSP430 microcontrollers through a FET programmer or eZ430 using JTAG or Spy-Bi-Wire (SBW) communication. MSP430 Flasher can be used to download binary files (.txt or .hex) files directly to the MSP430 microcontroller without the need for an IDE.

8.1.3 器件和开发工具命名规则

为了指明产品开发周期所处的阶段，TI 为所有 MSP430 MCU 器件和支持工具的产品型号分配了前缀。 每个 MSP430 MCU 商用系列产品成员具有以下三个前缀中的一个：MSP，PMS 或 XMS（例如，MSP430F5259）。 德州仪器 (TI) 建议为其支持的工具使用三个可能前缀指示符中的两个：MSP 和 MSPX。 这些前缀代表了产品从工程原型机（其中 XMS 针对器件，而 MSPX 针对工具）直到完全合格的生产器件和工具（其中 MSP 针对器件，而 MSP 针对工具）的产品开发进化阶段。

器件开发进化流程：

XMS - 试验器件不一定代表最终器件的电气技术规格

PMS - 最终的芯片模型符合器件的电气技术规格，但是未经完整的质量和可靠性验证

MSP - 完全合格的生产器件

支持工具开发进化流程：

MSPX - 还未经德州仪器 (TI) 完整内部质量测试的开发支持产品。

MSP – 完全合格的开发支持产品

XMS 和 PMS 器件和 MSPX 开发支持工具在供货时附带如下免责条款：

“开发的产品用于内部评估用途。”

MSP 器件和 MSP 开发支持工具已进行完全特性描述，并且器件的质量和可靠性已经完全论证。 TI 的标准保修证书适用。

预测显示原型器件（XMS 和 PMS）的故障率大于标准生产器件。 由于它们的预计的最终使用故障率仍未定义，德州仪器 (TI) 建议不要将这些器件用于任何生产系统。 只有合格的产品器件将被使用。

TI 器件的命名规则也包括一个带有器件系列名称的后缀。 这个后缀包括封装类型（例如，PZP）和温度范围（如，T）。图 8-1 提供了读取任一系列产品成员完整器件名称的图例。

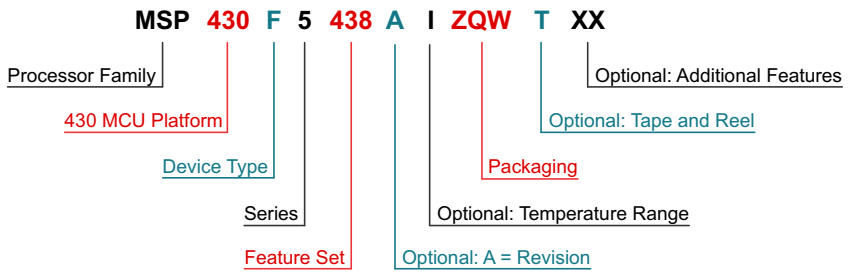

Processor Family	CC = Embedded RF Radio MSP = Mixed Signal Processor XMS = Experimental Silicon PMS = Prototype Device	
430 MCU Platform	TI's Low Power Microcontroller Platform	
Device Type	**Memory Type** C = ROM F = Flash FR = FRAM G = Flash or FRAM (Value Line) L = No Nonvolatile Memory	**Specialized Application** AFE = Analog Front End BT = Preprogrammed with *Bluetooth* BQ = Contactless Power CG = ROM Medical FE = Flash Energy Meter FG = Flash Medical FW = Flash Electronic Flow Meter
Series	1 Series = Up to 8 MHz 2 Series = Up to 16 MHz 3 Series = Legacy 4 Series = Up to 16 MHz w/ LCD	5 Series = Up to 25 MHz 6 Series = Up to 25 MHz w/ LCD 0 = Low Voltage Series
Feature Set	Various Levels of Integration Within a Series	
Optional: A = Revision	N/A	
Optional: Temperature Range	S = 0°C to 50°C C = 0°C to 70°C I = -40°C to 85°C T = -40°C to 105°C	
Packaging	www.ti.com/packaging	
Optional: Tape and Reel	T = Small Reel R = Large Reel No Markings = Tube or Tray	
Optional: Additional Features	-EP = Enhanced Product (-40°C to 105°C) -HT = Extreme Temperature Parts (-55°C to 150°C) -Q1 = Automotive Q100 Qualified	

图 **8-1.** 器件命名规则

8.2 文档支持

以下文档描述了 MSP430FR5739-EP MCU。 www.ti.com.cn 网站上提供了这些文档的副本。

SLAU272 *MSP430FR57xx 系列用户指南。* 这款器件系列内所提供的全部模块和外设的详细信息。

SLAZ392 ***MSP430FR5739** 器件勘误表。* 描述了针对这款器件每个芯片修订版本功能技术规格的已知例外情况。

SLAZ391 ***MSP430FR5738** 器件勘误表。* 描述了针对这款器件每个芯片修订版本功能技术规格的已知例外情况。

SLAZ390 ***MSP430FR5737** 器件勘误表。* 描述了针对这款器件每个芯片修订版本功能技术规格的已知例外情况。

SLAZ389 ***MSP430FR5736** 器件勘误表。* 描述了针对这款器件每个芯片修订版本功能技术规格的已知例外情况。

SLAZ388 ***MSP430FR5735** 器件勘误表。* 描述了针对这款器件每个芯片修订版本功能技术规格的已知例外情况。

SLAZ387 ***MSP430FR5734** 器件勘误表。* 描述了针对这款器件每个芯片修订版本功能技术规格的已知例外情况。

SLAZ386 ***MSP430FR5733** 器件勘误表。* 描述了针对这款器件每个芯片修订版本功能技术规格的已知例

版权 © 2014, Texas Instruments Incorporated

外情况。

SLAZ385 ***MSP430FR5732 器件勘误表。*** 描述了针对这款器件每个芯片修订版本功能技术规格的已知例外情况。

SLAZ384 ***MSP430FR5731 器件勘误表。*** 描述了针对这款器件每个芯片修订版本功能技术规格的已知例外情况。

SLAZ383 ***MSP430FR5730 器件勘误表。*** 描述了针对这款器件每个芯片修订版本功能技术规格的已知例外情况。

8.3 Community Resources

The following links connect to TI community resources. Linked contents are provided "AS IS" by the respective contributors. They do not constitute TI specifications and do not necessarily reflect TI's views; see TI's Terms of Use.

TI E2E™ Community
TI's Engineer-to-Engineer (E2E) Community. Created to foster collaboration among engineers. At e2e.ti.com, you can ask questions, share knowledge, explore ideas, and help solve problems with fellow engineers.

TI Embedded Processors Wiki
Texas Instruments Embedded Processors Wiki. Established to help developers get started with embedded processors from Texas Instruments and to foster innovation and growth of general knowledge about the hardware and software surrounding these devices.

8.4 商标

MSP430, Code Composer Studio, E2E are trademarks of Texas Instruments.
is a trademark of ~ Texas Instruments.
All other trademarks are the property of their respective owners.

8.5 静电放电警告

ESD 可能会损坏该集成电路。德州仪器 (TI) 建议通过适当的预防措施处理所有集成电路。如果不遵守正确的处理措施和安装程序，可能会损坏集成电路。

ESD 的损坏小至导致微小的性能降级，大至整个器件故障。 精密的集成电路可能更容易受到损坏，这是因为非常细微的参数更改都可能会导致器件与其发布的规格不相符。

8.6 术语表

SLYZ022 — *TI 术语表*。

这份术语表列出并解释术语、首字母缩略词和定义。

9 机械封装和可订购信息

9.1 封装信息

以下页中包括机械封装和可订购信息。 这些信息是针对指定器件可提供的最新数据。 这些数据会在无通知且不对本文档进行修订的情况下发生改变。 欲获得该数据表的浏览器版本，请查阅左侧的导航栏。

PACKAGING INFORMATION

Orderable part number	Status (1)	Material type (2)	Package | Pins	Package qty | Carrier	RoHS (3)	Lead finish/ Ball material (4)	MSL rating/ Peak reflow (5)	Op temp (°C)	Part marking (6)
M430FR5739SRHATEP	Active	Production	VQFN (RHA) | 40	250 | SMALL T&R	Yes	NIPDAU	Level-3-260C-168 HR	-55 to 85	M430 FR5739EP
M430FR5739SRHATEP.A	Active	Production	VQFN (RHA) | 40	250 | SMALL T&R	Yes	NIPDAU	Level-3-260C-168 HR	-55 to 85	M430 FR5739EP
V62/14644-01XE	Active	Production	VQFN (RHA) | 40	250 | SMALL T&R	Yes	NIPDAU	Level-3-260C-168 HR	-55 to 85	M430 FR5739EP

(1) **Status:** For more details on status, see our product life cycle.

(2) **Material type:** When designated, preproduction parts are prototypes/experimental devices, and are not yet approved or released for full production. Testing and final process, including without limitation quality assurance, reliability performance testing, and/or process qualification, may not yet be complete, and this item is subject to further changes or possible discontinuation. If available for ordering, purchases will be subject to an additional waiver at checkout, and are intended for early internal evaluation purposes only. These items are sold without warranties of any kind.

(3) **RoHS values:** Yes, No, RoHS Exempt. See the TI RoHS Statement for additional information and value definition.

(4) **Lead finish/Ball material:** Parts may have multiple material finish options. Finish options are separated by a vertical ruled line. Lead finish/Ball material values may wrap to two lines if the finish value exceeds the maximum column width.

(5) **MSL rating/Peak reflow:** The moisture sensitivity level ratings and peak solder (reflow) temperatures. In the event that a part has multiple moisture sensitivity ratings, only the lowest level per JEDEC standards is shown. Refer to the shipping label for the actual reflow temperature that will be used to mount the part to the printed circuit board.

(6) **Part marking:** There may be an additional marking, which relates to the logo, the lot trace code information, or the environmental category of the part.

Multiple part markings will be inside parentheses. Only one part marking contained in parentheses and separated by a "~" will appear on a part. If a line is indented then it is a continuation of the previous line and the two combined represent the entire part marking for that device.

Important Information and Disclaimer: The information provided on this page represents TI's knowledge and belief as of the date that it is provided. TI bases its knowledge and belief on information provided by third parties, and makes no representation or warranty as to the accuracy of such information. Efforts are underway to better integrate information from third parties. TI has taken and continues to take reasonable steps to provide representative and accurate information but may not have conducted destructive testing or chemical analysis on incoming materials and chemicals. TI and TI suppliers consider certain information to be proprietary, and thus CAS numbers and other limited information may not be available for release.

In no event shall TI's liability arising out of such information exceed the total purchase price of the TI part(s) at issue in this document sold by TI to Customer on an annual basis.

OTHER QUALIFIED VERSIONS OF MSP430FR5739-EP :

- Catalog : MSP430FR5739

NOTE: Qualified Version Definitions:

- Catalog - TI's standard catalog product

TAPE AND REEL INFORMATION

REEL DIMENSIONS

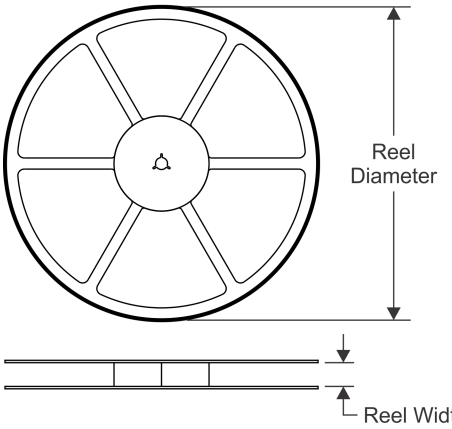

TAPE DIMENSIONS

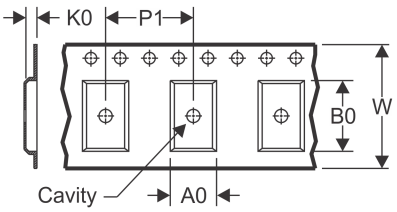

A0	Dimension designed to accommodate the component width
B0	Dimension designed to accommodate the component length
K0	Dimension designed to accommodate the component thickness
W	Overall width of the carrier tape
P1	Pitch between successive cavity centers

QUADRANT ASSIGNMENTS FOR PIN 1 ORIENTATION IN TAPE

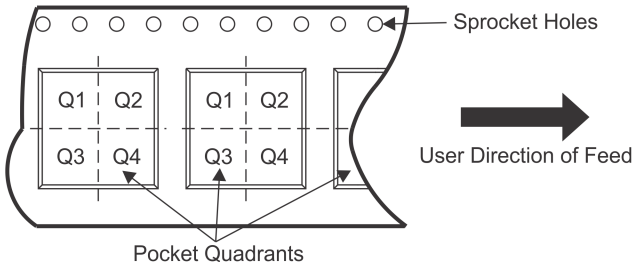

*All dimensions are nominal

Device	Package Type	Package Drawing	Pins	SPQ	Reel Diameter (mm)	Reel Width W1 (mm)	A0 (mm)	B0 (mm)	K0 (mm)	P1 (mm)	W (mm)	Pin1 Quadrant
M430FR5739SRHATEP	VQFN	RHA	40	250	180.0	16.4	6.3	6.3	1.1	12.0	16.0	Q2

TAPE AND REEL BOX DIMENSIONS

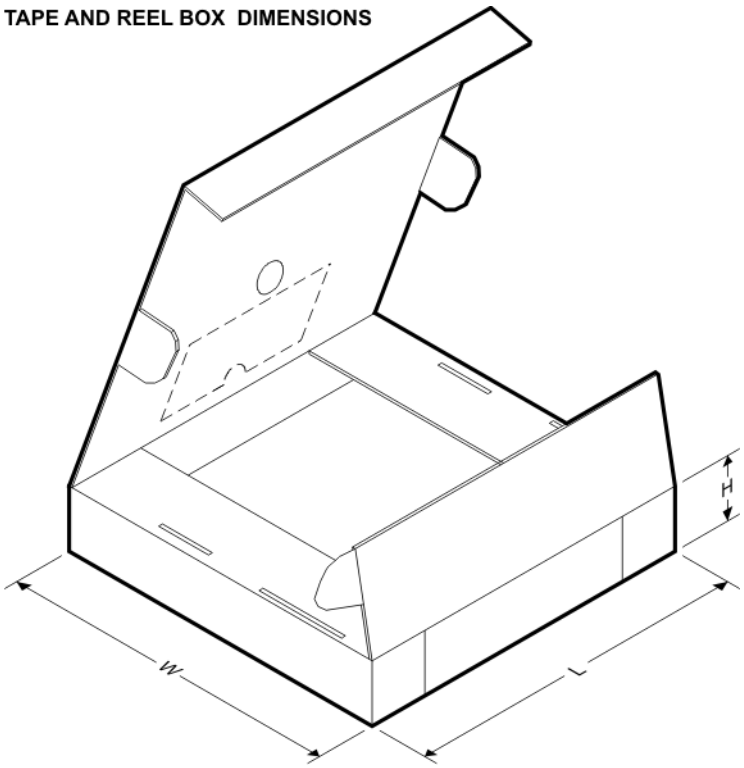

*All dimensions are nominal

Device	Package Type	Package Drawing	Pins	SPQ	Length (mm)	Width (mm)	Height (mm)
M430FR5739SRHATEP	VQFN	RHA	40	250	210.0	185.0	35.0

GENERIC PACKAGE VIEW

RHA 40

VQFN - 1 mm max height

6 x 6, 0.5 mm pitch

PLASTIC QUAD FLATPACK - NO LEAD

This image is a representation of the package family, actual package may vary.
Refer to the product data sheet for package details.

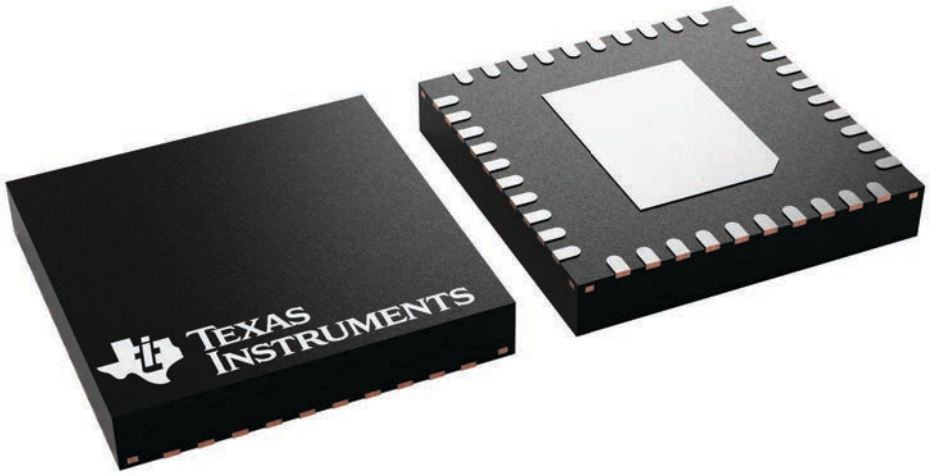

4225870/A

PACKAGE OUTLINE

RHA0040D

VQFN - 1 mm max height

PLASTIC QUAD FLATPACK - NO LEAD

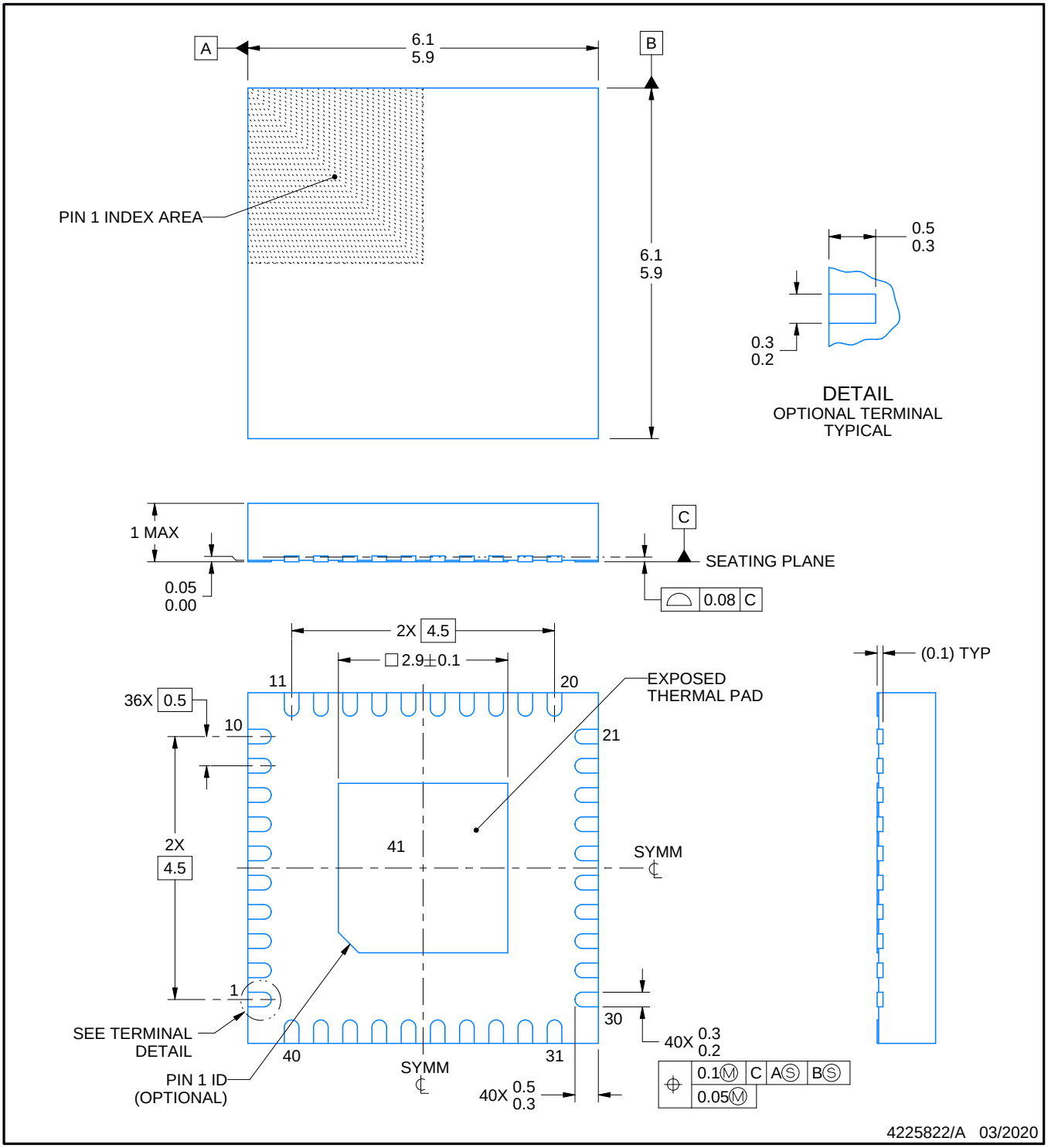

NOTES:

1. All linear dimensions are in millimeters. Any dimensions in parenthesis are for reference only. Dimensioning and tolerancing per ASME Y14.5M.
2. This drawing is subject to change without notice.
3. The package thermal pad must be soldered to the printed circuit board for thermal and mechanical performance.

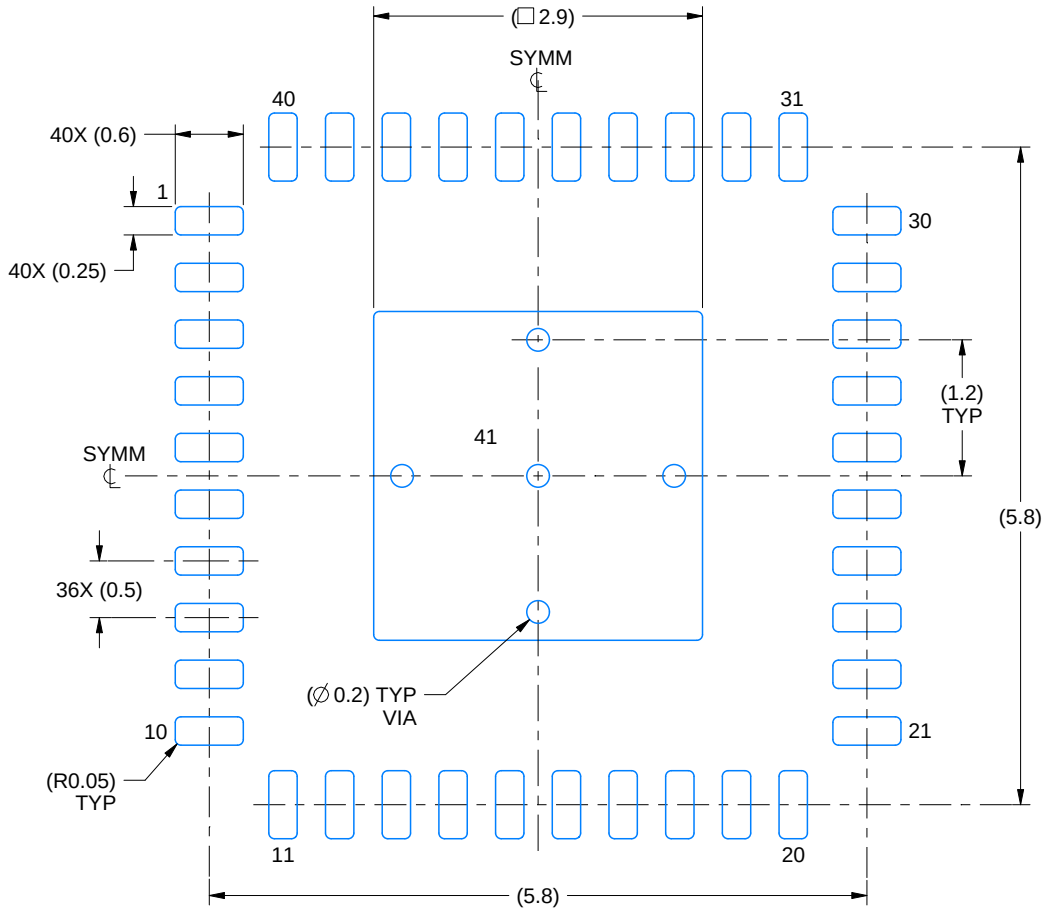

LAND PATTERN EXAMPLE
SCALE:15X

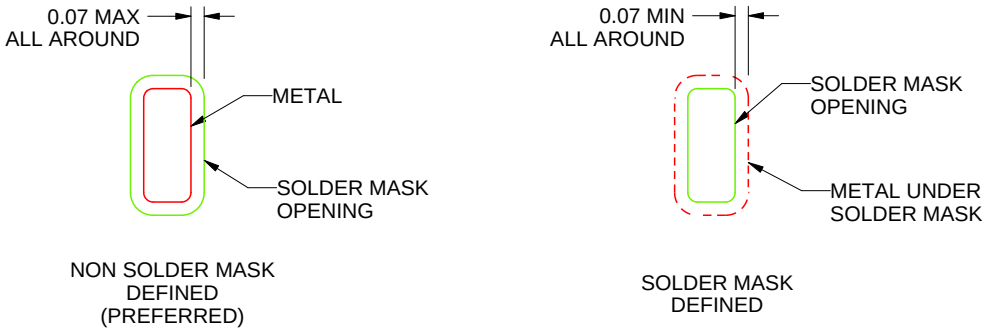

SOLDER MASK DETAILS

4225822/A 03/2020

NOTES: (continued)

4. This package is designed to be soldered to a thermal pad on the board. For more information, see Texas Instruments literature number SLUA271 (www.ti.com/lit/slua271).
5. Vias are optional depending on application, refer to device data sheet. If any vias are implemented, refer to their locations shown on this view.

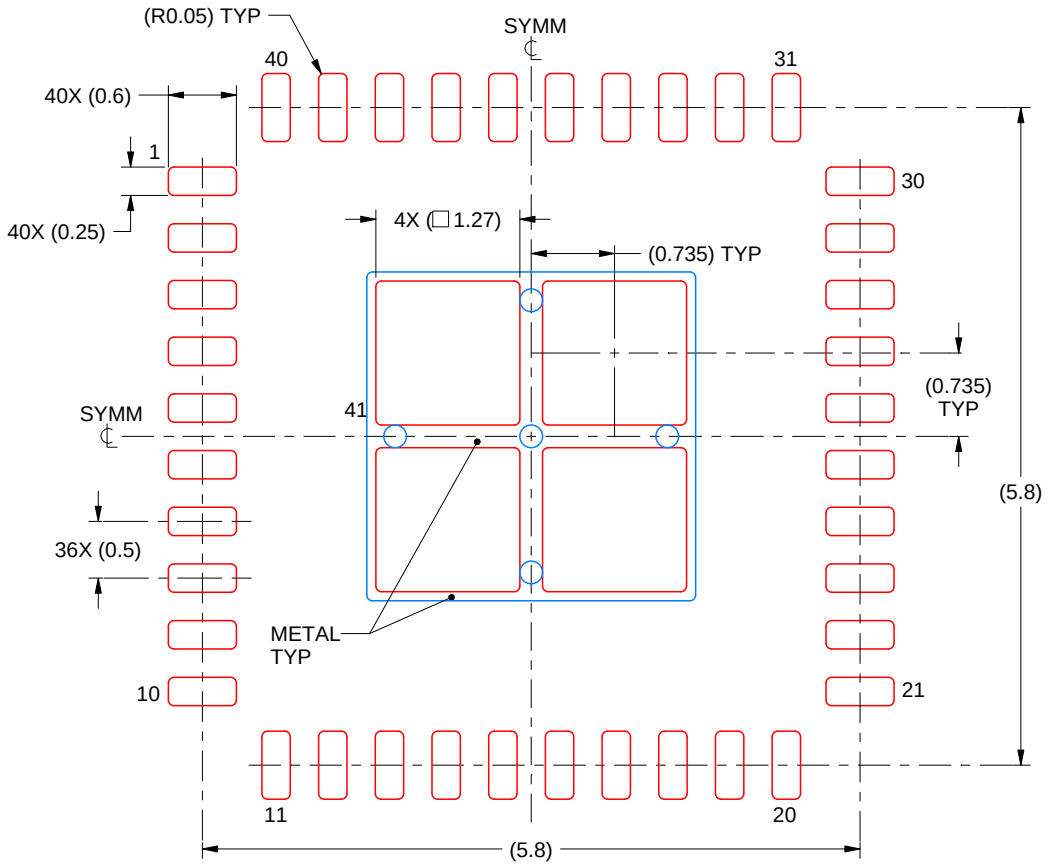

SOLDER PASTE EXAMPLE
BASED ON 0.125 mm THICK STENCIL

EXPOSED PAD 41:
76.46% PRINTED SOLDER COVERAGE BY AREA UNDER PACKAGE
SCALE:15X

4225822/A 03/2020

NOTES: (continued)

6. Laser cutting apertures with trapezoidal walls and rounded corners may offer better paste release. IPC-7525 may have alternate design recommendations.

重要通知和免责声明

TI“按原样”提供技术和可靠性数据（包括数据表）、设计资源（包括参考设计）、应用或其他设计建议、网络工具、安全信息和其他资源，不保证没有瑕疵且不做出任何明示或暗示的担保，包括但不限于对适销性、与某特定用途的适用性或不侵犯任何第三方知识产权的暗示担保。

这些资源可供使用 TI 产品进行设计的熟练开发人员使用。您将自行承担以下全部责任：(1) 针对您的应用选择合适的 TI 产品，(2) 设计、验证并测试您的应用，(3) 确保您的应用满足相应标准以及任何其他安全、安保法规或其他要求。

这些资源如有变更，恕不另行通知。TI 授权您仅可将这些资源用于研发本资源所述的 TI 产品的相关应用。严禁以其他方式对这些资源进行复制或展示。您无权使用任何其他 TI 知识产权或任何第三方知识产权。对于因您对这些资源的使用而对 TI 及其代表造成的任何索赔、损害、成本、损失和债务，您将全额赔偿，TI 对此概不负责。

TI 提供的产品受 TI 销售条款)、TI 通用质量指南 或 ti.com 上其他适用条款或 TI 产品随附的其他适用条款的约束。TI 提供这些资源并不会扩展或以其他方式更改 TI 针对 TI 产品发布的适用的担保或担保免责声明。 除非德州仪器 (TI) 明确将某产品指定为定制产品或客户特定产品，否则其产品均为按确定价格收入目录的标准通用器件。

TI 反对并拒绝您可能提出的任何其他或不同的条款。

版权所有 © 2026，德州仪器 (TI) 公司

最后更新日期：2025 年 10 月