MSP430FR235x、MSP430FR215x 混合信号微控制器

1 器件概述

1.1 特性

- 嵌入式微控制器
  - 16 位 RISC 架构，频率最高可达 24MHz
  - 扩展温度范围：–40°C 至 105°C
  - 3.6V 至 1.8V 的宽电源电压范围（工作电压受限于 SVS 电平，参阅 V_{SVSH-} 和 V_{SVSH+}，见 *PMM、SVS 和 BOR*）
- 经优化的低功耗模式（3V）
  - 工作模式：142µA/MHz
  - 待机：
    - 具有 32768Hz 晶体的 LPM3：1.43µA（SVS 处于启用状态）
    - 具有 32768Hz 晶体的 LPM3.5：620nA（SVS 处于启用状态）
  - 关断 (LPM4.5)：42nA（SVS 处于启用状态）
- 低功耗铁电 RAM (FRAM)
  - 容量高达 32KB 的非易失性存储器
  - 内置错误修正码 (ECC)
  - 可配置的写保护
  - 对程序、常量和存储的统一存储
  - 耐写次数达 10^{15} 次
  - 抗辐射和非磁性
- 易于使用
  - 20KB ROM 库包含驱动程序库和 FFT 库
- 高性能模拟
  - 一个 12 通道 12 位模数转换器 (ADC)
    - 内部共享基准（1.5、2.0 或 2.5V）
    - 采样与保持 200ksps
  - 两个增强型比较器 (eCOMP)
    - 集成 6 位数模转换器 (DAC) 作为基准电压
    - 可编程迟滞
    - 可配置的高功率和低功率模式
    - 一个具有 100ns 的快速响应时间
    - 一个具有 1µs 的响应时间以及 1.5µA 的低功耗
  - 四个智能模拟组合 (SAC-L3)（仅限 MSP430FR235x 器件）
    - 支持通用运算放大器 (OA)
    - 轨至轨输入和输出
    - 多个输入信号选项
    - 可配置的高功率和低功率模式
    - 可配置 PGA 模式支持
      - 同相模式：×1、×2、×3、×5、×9、×17、×26、×33
      - 反相模式：×1、×2、×4、×8、×16、×25、×32
    - 用于进行失调电压和偏置设置的内置 12 位基准 DAC
    - 具有可选基准电压的 12 位电压 DAC 模式
- 智能数字外设
  - 三个 16 位计时器，每个计时器有 3 个捕捉/比较寄存器 (Timer_B3)
  - 一个 16 位计时器，每个计时器有 7 个捕捉/比较寄存器 (Timer_B7)
  - 一个仅用作计数器的 16 位实时钟计数器 (RTC)
  - 16 位循环冗余校验器 (CRC)
  - 中断比较控制器 (ICC)，可启用嵌套硬件中断
  - 32 位硬件乘法器 (MPY32)
  - 曼彻斯特编解码器 (MFM)
- 增强型串行通信
  - 两个增强型 USCI_A (eUSCI_A) 模块支持 UART、IrDA 和 SPI
  - 两个增强型 USCI_B (eUSCI_B) 模块支持 SPI 和 I^2C
- 时钟系统 (CS)
  - 片上 32kHz RC 振荡器 (REFO)
  - 带有锁频环 (FLL) 的片上 24MHz 数控振荡器 (DCO)
    - 室温下的精度为 ±1%（具有片上基准）
  - 片上超低频 10kHz 振荡器 (VLO)
  - 片上高频调制振荡器 (MODOSC)
  - 外部 32kHz 晶振 (LFXT)
  - 外部高频晶体振荡器，频率最高可达 24MHz (HFXT)
  - 可编程 MCLK 预分频器（1 至 128）
  - 源自具有可编程预分频器（1、2、4 或 8）的 MCLK 的 SMCLK

本文档旨在为方便起见，提供有关 TI 产品中文版本的信息，以确认产品的概要。 有关适用的官方英文版本的最新信息，请访问 www.ti.com，其内容始终优先。 TI 不保证翻译的准确性和有效性。 在实际设计之前，请务必参考最新版本的英文版本。

- 通用输入/输出和引脚功能
  - 48 引脚封装上的 44 个 I/O
  - 32 个中断引脚（P1、P2、P3 和 P4）可以将 MCU 从 LPM 唤醒
- 开发工具和软件（另外请参阅 工具和软件）
  - LaunchPad™开发套件 (MSP-EXP430FR2355)
  - 目标开发板 (MSP-TS43048PT)
  - 免费的专业开发环境
- 系列成员（另请参阅 器件比较）
  - MSP430FR2355：32KB 的程序 FRAM、512B 的数据 FRAM、4KB 的 RAM
  - MSP430FR2353：16KB 的程序 FRAM、512B 的数据 FRAM、2KB 的 RAM
  - MSP430FR2155：32KB 的程序 FRAM、512B 的数据 FRAM、4KB 的 RAM
  - MSP430FR2153：16KB 的程序 FRAM、512B 的数据 FRAM、2KB 的 RAM
- 封装选项
  - 48 引脚：LQFP (PT)
  - 40 引脚：VQFN (RHA)
  - 38 引脚：TSSOP (DBT)
  - 32 引脚：VQFN (RSM)

1.2 应用

- 烟雾和热量探测器
- 传感器变送器
- 断路器
- 传感器信号调节
- 有线工业通信
- 光学模块
- 电池组管理
- 收费标签

1.3 说明

MSP430FR215x 和 MSP430FR235x 微控制器 (MCU) 均属于 MSP430™MCU 超值系列超低功耗低成本器件产品系列，该产品系列适用于检测和测量 应用。MSP430FR235x MCU 集成了四个称之为智能模拟组合的可配置信号链模块，每个组合均可用作 12 位 DAC 或可配置可编程增益运算放大器，以满足系统的特定需求，同时缩减 BOM 并减小 PCB 尺寸。该器件还包含一个 12 位 SAR ADC 和两个比较器。MSP430FR215x 和 MSP430FR235x MCU 都支持 –40° 至 105°C 的扩展温度范围，因此更高温度的工业应用 可从这些器件的 FRAM 数据记录功能受益。该扩展温度范围使开发人员可以满足烟雾探测器、传感器变送器和断路器等 应用 的要求。

MSP430FR215x 和 MSP430FR235x MCU 具有功能强大的 16 位 RISC CPU、16 位寄存器和常数发生器，有助于实现最大编码效率。数控振荡器 (DCO) 通常可以使器件在不到 10µs 的时间内从低功耗模式唤醒至激活模式。

MSP430 超低功耗 (ULP) FRAM 微控制器平台将独特的嵌入式 FRAM 和整体超低功耗系统架构相结合，从而使系统设计人员能够在降低能耗的情况下提升性能。FRAM 技术将 RAM 的低功耗快速写入、灵活性和耐用性与闪存的非易失性相结合。

MSP430FR215x 和 MSP430FR235x MCU 由广泛的硬件和软件生态系统提供支持，随附参考设计和代码示例，便于您快速开始设计。开发套件包括 MSP-EXP430FR2355 LaunchPad™开发套件和 MSP-TS430PT48 48 引脚目标开发板。TI 还提供免费的 MSP430Ware™ 软件，该软件以 Code Composer Studio™ IDE 台式机和云版本组件的形式提供（位于 TI Resource Explorer）。 E2E™ 支持论坛还为 MSP430 MCU 提供广泛的在线配套资料、培训和在线支持。

有关完整的模块说明，请参阅《MSP430FR4xx 和 MSP430FR2xx 系列器件用户指南》。

版权 © 2018–2019, Texas Instruments Incorporated

器件信息(1)

器件型号	工作温度	封装	封装尺寸(2)
MSP430FR2355TPT	-40°C 至 105°C	LQFP (48)	7mm × 7mm
MSP430FR2353TPT			
MSP430FR2155TPT			
MSP430FR2153TPT			
MSP430FR2355TRHA	-40°C 至 105°C	VQFN (40)	6mm × 6mm
MSP430FR2353TRHA			
MSP430FR2155TRHA			
MSP430FR2153TRHA			
MSP430FR2355TDBT	-40°C 至 105°C	TSSOP (38)	9.7mm × 4.4mm
MSP430FR2353TDBT			
MSP430FR2155TDBT			
MSP430FR2153TDBT			
MSP430FR2355TRSM	-40°C 至 105°C	VQFN (32)	4mm × 4mm
MSP430FR2353TRSM			
MSP430FR2155TRSM			
MSP430FR2153TRSM			

(1) 要获得最新的产品、封装和订购信息，请参见*封装选项附录*（节 9），或者访问德州仪器 (TI) 网站 www.ti.com.cn。
(2) 这里显示的尺寸为近似值。要获得包含误差值的封装尺寸，请参见*机械数据*（节 9中）。

CAUTION

系统级静电放电 (ESD) 保护必须符合器件级 ESD 规范，以防发生电气过载或对数据或代码存储器造成干扰。有关更多信息，请参阅《MSP430™ 系统级 ESD 注意事项》。

1.4 功能方框图

图 1-1 显示了 MSP430FR235x 功能方框图。

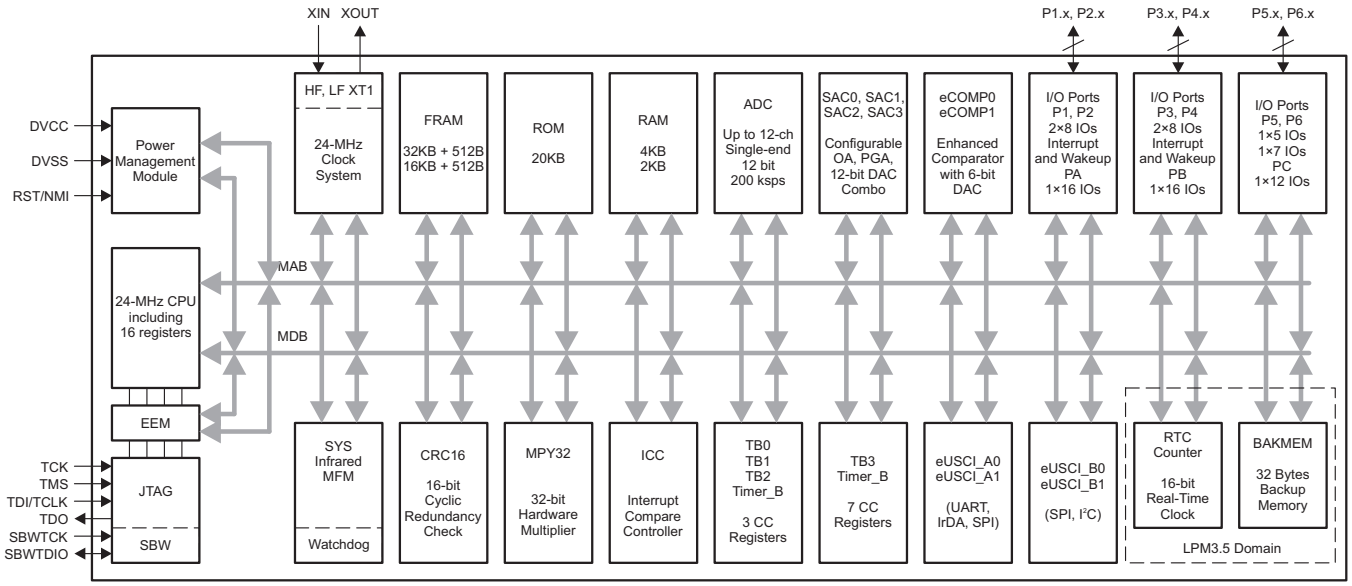

图 1-1. MSP430FR235x 功能方框图

图 1-2 显示了 MSP430FR215x 功能方框图。

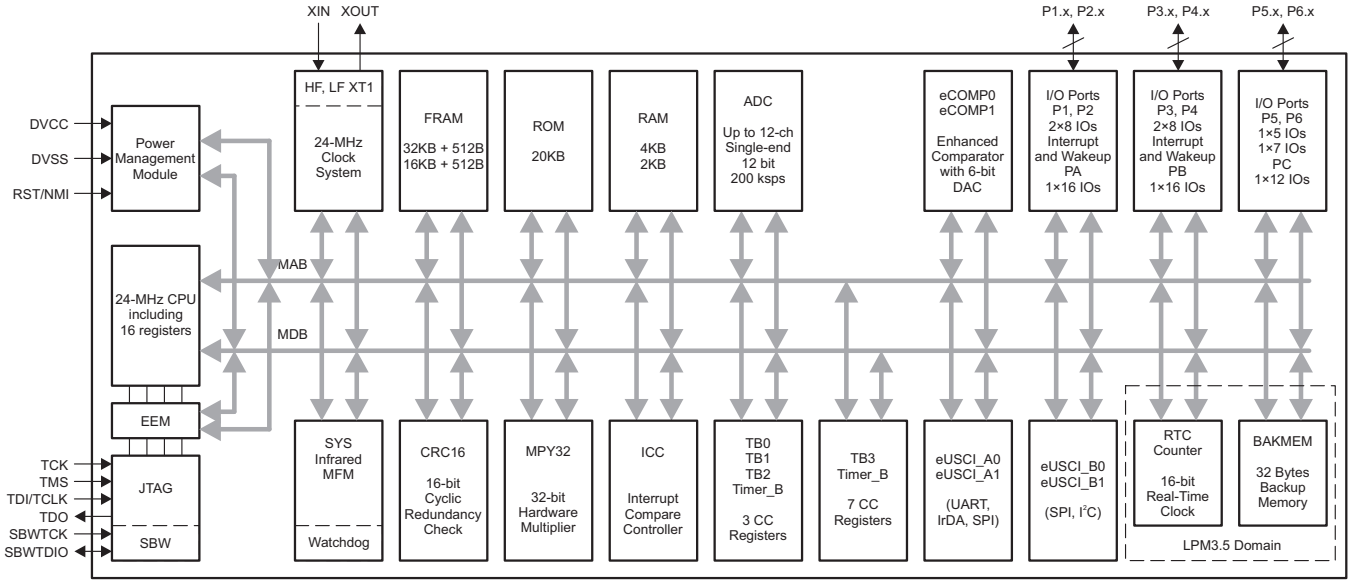

图 1-2. MSP430FR215x 功能方框图

- MCU 具有一个 DVCC 和 DVSS 引脚主电源对，用于为数字模块和模拟模块供电。推荐的旁路电容和去耦电容分别为 4.7µF 至 10µF 和 0.1µF，精度为 ±5%。
- P1、P2、P3 和 P4 具有引脚中断功能，可以将 MCU 从所有 LPM（包括 LPM4、LPM3.5 和 LPM4.5）唤醒。
- 每个 Timer_B3 具有三个捕捉/比较寄存器。仅 CCR1 和 CCR2 从外部连接。Timer_B7 有 7 个捕捉/比较寄存器。仅 CCR1 至 CCR6 从外部连接。CCR0 寄存器仅用于内部周期时序和中断生成。
- 在 LPM3.5 模式下，RTC 计数器与备用存储器可继续工作，而其余外设停止工作。

版权 © 2018–2019, Texas Instruments Incorporated

内容

1 器件概述 1
1.1 特性 1
1.2 应用 2
1.3 说明 2
1.4 功能方框图 4
2 修订历史记录 6
3 Device Comparison 8
3.1 Related Products 9
4 Terminal Configuration and Functions 10
4.1 Pin Diagrams 10
4.2 Pin Attributes 18
4.3 Signal Descriptions 22
4.4 Pin Multiplexing 26
4.5 Buffer Type 26
4.6 Connection of Unused Pins 26
5 Specifications 27
5.1 Absolute Maximum Ratings 27
5.2 ESD Ratings 27
5.3 Recommended Operating Conditions 27
5.4 Active Mode Supply Current Into V_{CC} Excluding External Current 28
5.5 Active Mode Supply Current Per MHz 28
5.6 Low-Power Mode LPM0 Supply Currents Into V_{CC} Excluding External Current 28
5.7 Low-Power Mode LPM3 and LPM4 Supply Currents (Into V_{CC}) Excluding External Current 29
5.8 Low-Power Mode LPMx.5 Supply Currents (Into V_{CC}) Excluding External Current 30
5.9 Production Distribution of LPM Supply Currents 31
5.10 Typical Characteristics - Current Consumption Per Module 32
5.11 Thermal Resistance Characteristics 32
5.12 Timing and Switching Characteristics 33
6 Detailed Description 61
6.1 CPU 61
6.2 Operating Modes 61
6.3 Interrupt Vector Addresses 63
6.4 Memory Organization 65
6.5 Bootloader (BSL) 65
6.6 JTAG Standard Interface 66
6.7 Spy-Bi-Wire Interface (SBW) 66
6.8 FRAM 66
6.9 Memory Protection 67
6.10 Peripherals 67
6.11 Input/Output Diagrams 95
6.12 Device Descriptors (TLV) 107
6.13 Identification 109
7 Applications, Implementation, and Layout 110
7.1 Device Connection and Layout Fundamentals 110
7.2 Peripheral- and Interface-Specific Design Information 113
7.3 ROM Libraries 114
7.4 Typical Applications 114
8 器件和文档支持 115
8.1 使用入门 115
8.2 器件命名规则 115
8.3 工具和软件 116
8.4 文档支持 118
8.5 相关链接 118
8.6 商标 120
8.7 静电放电警告 120
8.8 Glossary 120
9 机械、封装和可订购信息 121

2 修订历史记录

从修订版本 C 更改为修订版本 D

Changes from March 6, 2019 to December 10, 2019	Page
• 修正了 图 1-1 中的 ROM 规格*MSP430FR235x 功能方框图* 和 图 1-2 *MSP430FR215x 功能方框图*	4
• Added a note on all VQFN pinouts to indicate that the thermal pad should be connected to VSS	11
• Corrected 图 4-4, *32-Pin RSM (VQFN) (Top View) – MSP430FR235x*	13
• Changed the note that begins "Supply voltage changes faster than 0.2 V/µs can trigger a BOR reset..." in Section 5.3, *Recommended Operating Conditions*	27
• Added the note that begins "TI recommends that power to the DVCC pin must not exceed the limits..." in Section 5.3, *Recommended Operating Conditions*	27
• Changed the note that begins "A capacitor tolerance of ±20% or better is required..." in Section 5.3, *Recommended Operating Conditions*	27
• Combined former sections 5.8 and 5.10 into 节 5.9, *Production Distribution of LPM Supply Currents*	31
• Corrected the "SVS disabled" condition for 图 5-1	31
• Added the note "See *MSP430 32-kHz Crystal Oscillators* for details on crystal section, layout, and testing" to 表 5-3, *XT1 Crystal Oscillator (Low Frequency)*	35
• Changed the note that begins "Requires external capacitors at both terminals..." in 表 5-3, *XT1 Crystal Oscillator (Low Frequency)*	35
• Added the $t_{TB,cap}$ parameter in 表 5-13, *Timer_B*	45
• Corrected the test conditions for the R_I parameter in 表 5-20, *ADC, Power Supply and Input Range Conditions*	51
• Removed ADCDIV from the equation for the ADC conversion time because ADCCLK is after division in 表 5-21, *ADC, Timing Parameters*	51
• Added the note that begins "$t_{Sample} = \ln(2^{n+1}) \times \tau$ ..." in 表 5-21, *ADC, Timing Parameters*	51
• Changed the unit from "nV" to "µV" for the "Input noise voltage" in the 表 5-25, *SAC, OA*	55
• Changed the unit from "nv/Hz" to "nV/$\sqrt{Hz}$" for the "Input noise voltage density" in the 表 5-25, *SAC, OA*	55
• Removed the I_{ref} trim parameter from 表 5-27, *FRAM*	57
• Changed the bitfield name from RTCCLK to RTCCKSEL in the table note on 表 6-9, *Clock Distribution*	68
• Added 节 6.10.17, *Cross-Chip Interconnection (SACx are MSP430FR235x Devices Only)*	83
• Added P1SELC information in 表 6-41, *Port P1, P2 Registers (Base Address: 0200h)*	86
• Added P2SELC information in 表 6-41, *Port P1, P2 Registers (Base Address: 0200h)*	86
• Added P3SELC information in 表 6-42, *Port P3, P4 Registers (Base Address: 0220h)*	87
• Added P4SELC information in 表 6-42, *Port P3, P4 Registers (Base Address: 0220h)*	87
• Added P5SELC information in 表 6-43, *Port P5, P6 Registers (Base Address: 0240h)*	87
• Added P6SELC information in 表 6-43, *Port P5, P6 Registers (Base Address: 0240h)*	87
• Changed CRC covered end address to 0x1AF7 in table note (1) in 表 6-70, *Device Descriptors*	107

从修订版本 B 更改为修订版本 C

Changes from July 3, 2018 to March 5, 2019	Page
• 增加了 32 引脚 VQFN (RSM) 封装信息，见 节 1.1, *特性*	2
• 在器件信息表中增加了 32 引脚 VQFN (RSM) 封装信息，见 节 1.3（*说明部分*）	3
• Added 32-pin VQFN (RSM) package information in 表 3-1, *Device Comparison*	8
• Added 图 4-4, *32-Pin RSM (VQFN) (Top View) – MSP430FR235x*	13
• Added 图 4-8, *32-Pin RSM (VQFN) (Top View) – MSP430FR215x*	17
• Added 32-pin VQFN (RSM) package information in 节 4.2, *Pin Attributes*	18
• Added 32-pin VQFN (RSM) package information in 节 4.3, *Signal Descriptions*	22
• Added 32-pin VQFN (RSM) package information in Section 5.11, *Thermal Resistance Characteristics*	32
• Added the $t_{TB,cap}$ parameter in 表 5-13, *Timer_B*	45
• Removed the I_{ref} trim parameter from 表 5-27, *FRAM*	57

版权 © 2018–2019, Texas Instruments Incorporated

从修订版本 A 更改为修订版本 B

Changes from June 20, 2018 to July 2, 2018	Page
• Added the $t_{TB,cap}$ parameter in 表 5-13, *Timer_B*	45
• Removed the I_{ref} trim parameter from 表 5-27, *FRAM*	57
• 更新了节 8.3*工具和软件*	116
• 在节 8.4*文档支持* 中添加了勘误表	118

从初始发行版更改为修订版本 A

Changes from May 11, 2018 to June 19, 2018	Page
• 将文档状态更改为“生产数据”	1
• Added missing UCB0SCL signal to P1.3/UCB0SOMI/UCB0SCL/OA0+/A3 in pinout figures	11
• Added the $t_{TB,cap}$ parameter in 表 5-13, *Timer_B*	45
• Removed the I_{ref} trim parameter from 表 5-27, *FRAM*	57
• Added row for "Driver library and FFT library" in 表 6-4, *Memory Organization*	65
• Added 节 7.3, *ROM Libraries*	114
• Corrected the title and link to reference design in 表 7-1, *Tools and Reference Designs*	114

版权 © 2018–2019, Texas Instruments Incorporated

3 Device Comparison

表 3-1 summarizes the features of the available family members.

表 3-1. Device Comparison(1) (2)

DEVICE	PROGRAM FRAM	SRAM (bytes)	TB0, TB1, TB2	TB3	eUSCI_A	eUSCI_B	12-BIT ADC CHANNELS	SAC	eCOMP	I/Os	PACKAGE
MSP430FR2355PT	32KB + 512B	4096	3 × CCR(3)	7 × CCR(3)	2	2	12	4	2	44	48 PT (LQFP)
MSP430FR2353PT	16KB + 512B	2048	3 × CCR(3)	7 × CCR(3)	2	2	12	4	2	44	48 PT (LQFP)
MSP430FR2355RHA	32KB + 512B	4096	3 × CCR(3)	7 × CCR(3)	2	2	10	4	2	36	40 RHA (VQFN)
MSP430FR2353RHA	16KB + 512B	2048	3 × CCR(3)	7 × CCR(3)	2	2	10	4	2	36	40 RHA (VQFN)
MSP430FR2355DBT	32KB + 512B	4096	3 × CCR(3)	7 × CCR(3)	2	2	10	4	2	34	38 DBT (TSSOP)
MSP430FR2353DBT	16KB + 512B	2048	3 × CCR(3)	7 × CCR(3)	2	2	10	4	2	34	38 DBT (TSSOP)
MSP430FR2355RSM	32KB + 512B	4096	3 × CCR(3)	7 × CCR(3)	2	2(4)	8	4	2	28	32 RSM (VQFN)
MSP430FR2353RSM	16KB + 512B	2048	3 × CCR(3)	7 × CCR(3)	2	2(4)	8	4	2	28	32 RSM (VQFN)
MSP430FR2155PT	32KB + 512B	4096	3 × CCR(3)	7 × CCR(3)	2	2	12	–	2	44	48 PT (LQFP)
MSP430FR2153PT	16KB + 512B	2048	3 × CCR(3)	7 × CCR(3)	2	2	12	–	2	44	48 PT (LQFP)
MSP430FR2155RHA	32KB + 512B	4096	3 × CCR(3)	7 × CCR(3)	2	2	10	–	2	36	40 RHA (VQFN)
MSP430FR2153RHA	16KB + 512B	2048	3 × CCR(3)	7 × CCR(3)	2	2	10	–	2	36	40 RHA (VQFN)
MSP430FR2155DBT	32KB + 512B	4096	3 × CCR(3)	7 × CCR(3)	2	2	10	–	2	34	38 DBT (TSSOP)
MSP430FR2153DBT	16KB + 512B	2048	3 × CCR(3)	7 × CCR(3)	2	2	10	–	2	34	38 DBT (TSSOP)
MSP430FR2155RSM	32KB + 512B	4096	3 × CCR(3)	7 × CCR(3)	2	2(4)	8	–	2	28	32 RSM (VQFN)
MSP430FR2153RSM	16KB + 512B	2048	3 × CCR(3)	7 × CCR(3)	2	2(4)	8	–	2	28	32 RSM (VQFN)

(1) For the most current device, package, and ordering information, see the *Package Option Addendum* in 节 9, or see the TI web site at www.ti.com.
(2) Package drawings, standard packing quantities, thermal data, symbolization, and PCB design guidelines are available at www.ti.com/packaging.
(3) A CCR register is a configurable register that provides internal and external capture or compare inputs, or internal and external PWM outputs. Not all CCR channels are package specific. See the definition in 节 4.3.
(4) eUSCI_B1 supports only I^2C function.

版权 © 2018–2019, Texas Instruments Incorporated

3.1 Related Products

For information about other devices in this family of products or related products, see the following links.

TI 16-bit and 32-bit microcontrollers

High-performance, low-power solutions to enable the autonomous future

Products for MSP430 ultra-low-power sensing & measurement microcontrollers

One platform. One ecosystem. Endless possibilities.

Companion products for MSP430FR2355

Review products that are frequently purchased or used with this product.

Reference designs for MSP430FR2355

Find reference designs leveraging the best in TI technology to solve your system-level challenges.

4 Terminal Configuration and Functions

4.1 Pin Diagrams

图 4-1 shows the pinout of the 48-pin PT package for the MSP430FR235x MCUs.

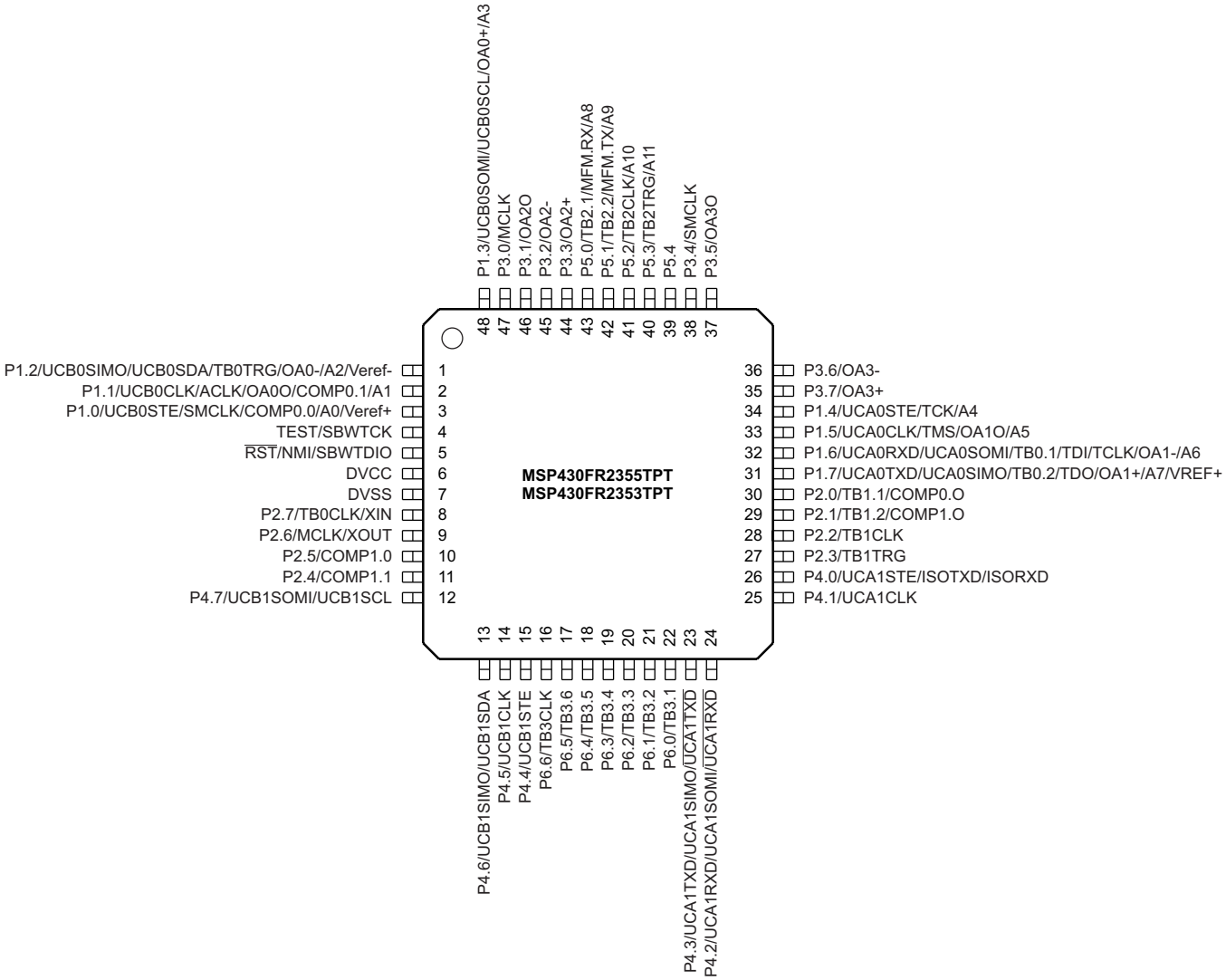

图 4-1. 48-Pin PT (LQFP) (Top View) – MSP430FR235x

版权 © 2018–2019, Texas Instruments Incorporated

图 4-2 shows the pinout of the 40-pin RHA package for the MSP430FR235x MCUs.

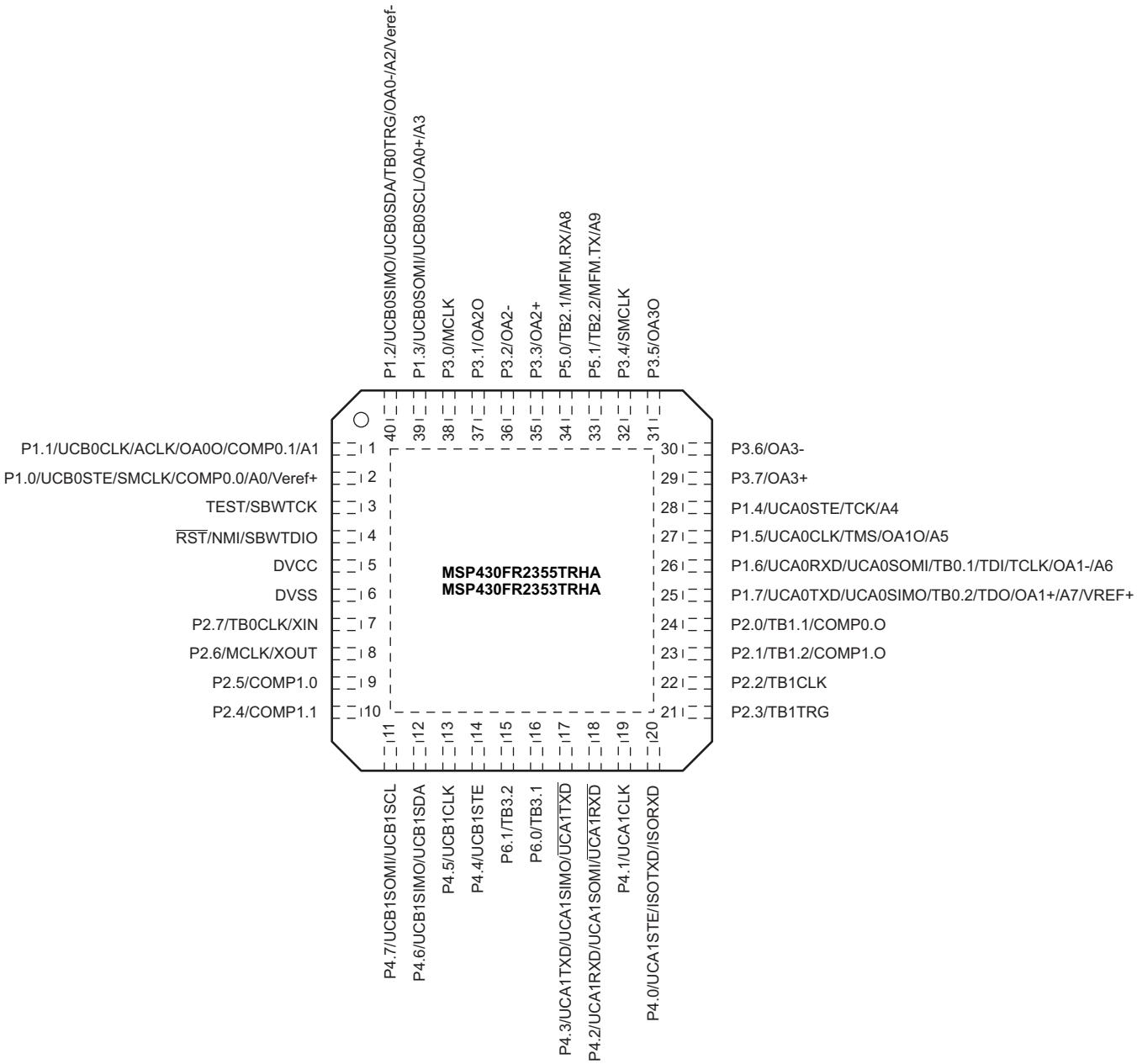

NOTE: Connect the exposed thermal pad to VSS.

图 4-2. 40-Pin RHA (VQFN) (Top View) – MSP430FR235x

图 4-3 shows the pinout of the 38-pin DBT package for the MSP430FR235x MCUs.

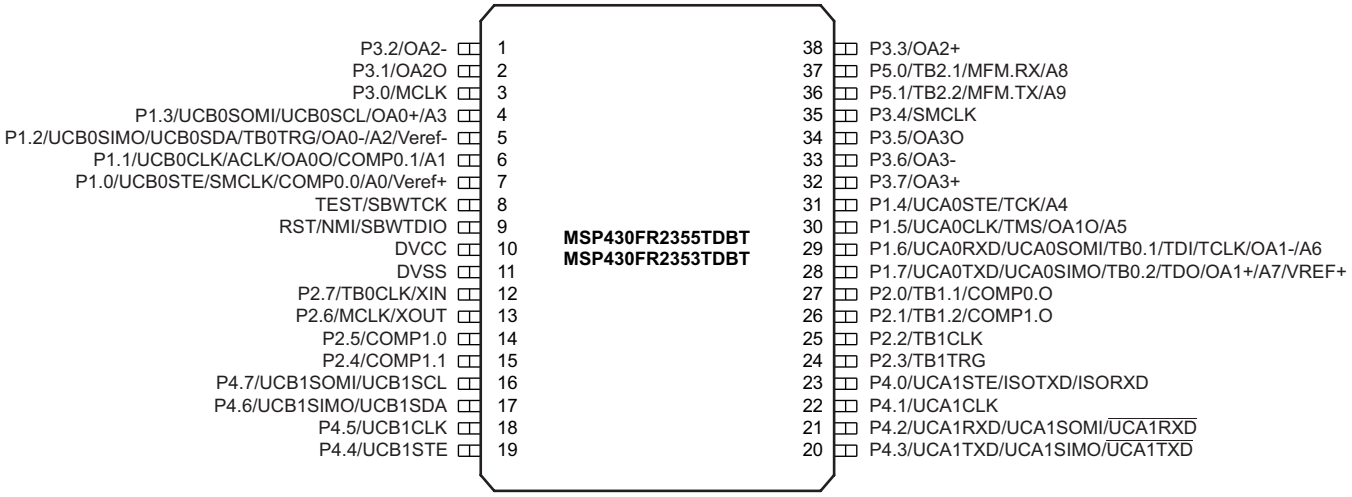

图 4-3. 38-Pin DBT (TSSOP) (Top View) – MSP430FR235x

版权 © 2018–2019, Texas Instruments Incorporated

图 4-4 shows the pinout of the 32-pin RSM package for the MSP430FR235x MCUs.

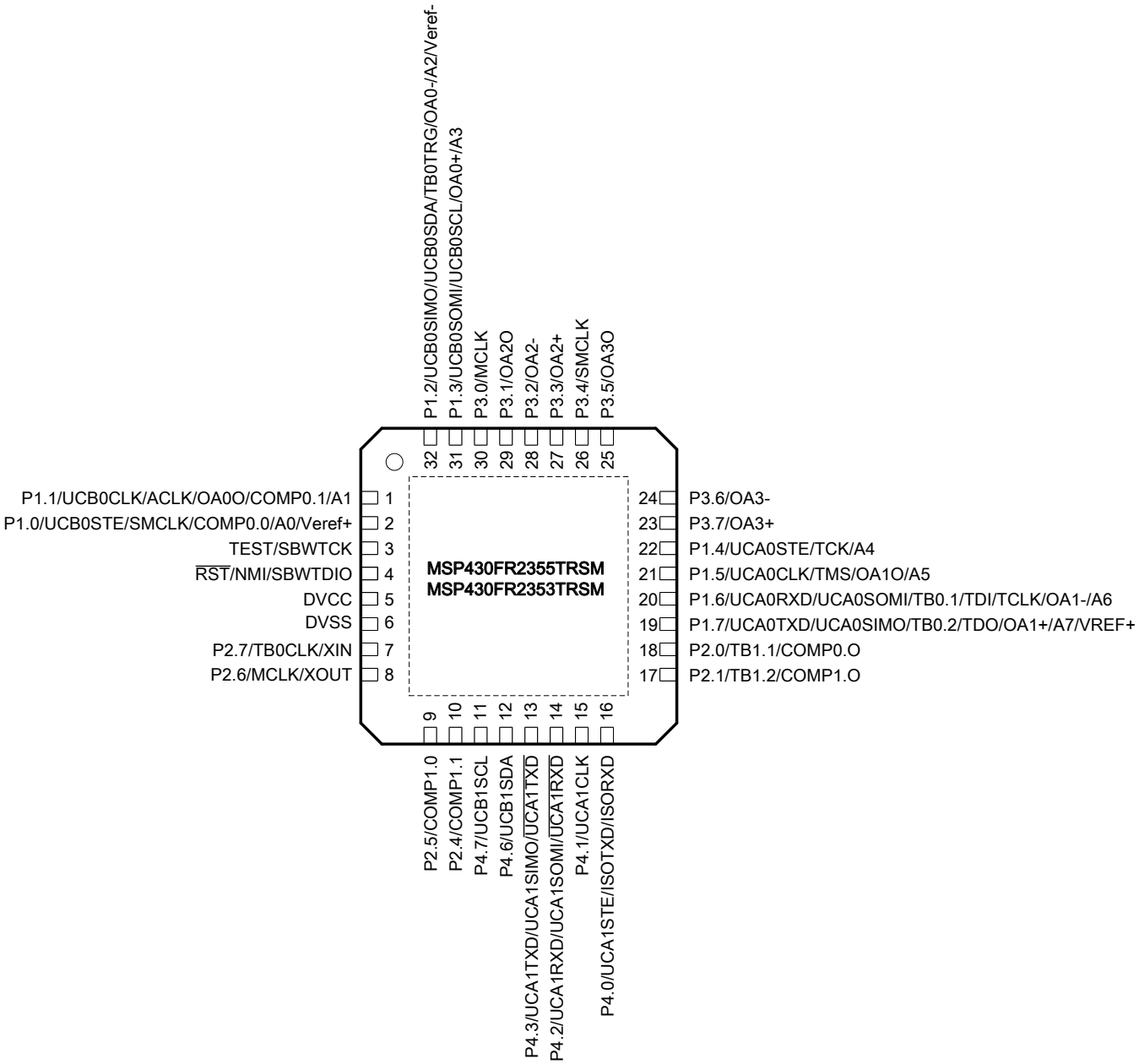

NOTE: Connect the exposed thermal pad to VSS.

图 4-4. 32-Pin RSM (VQFN) (Top View) – MSP430FR235x

图 4-5 shows the pinout of the 48-pin PT package for the MSP430FR215x MCUs.

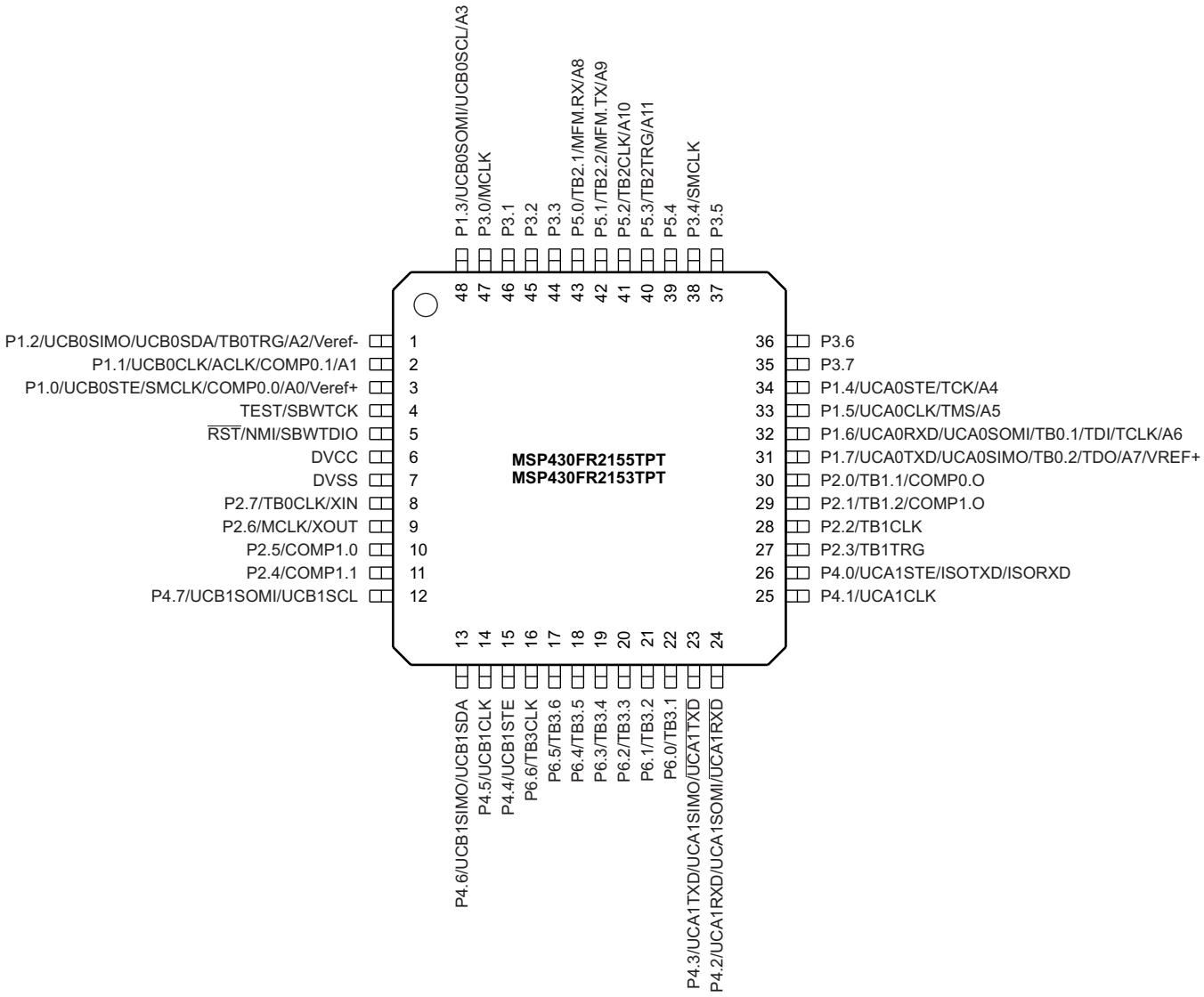

图 4-5. 48-Pin PT (LQFP) (Top View) – MSP430FR215x

版权 © 2018–2019, Texas Instruments Incorporated

图 4-6 shows the pinout of the 40-pin RHA package for the MSP430FR215x MCUs.

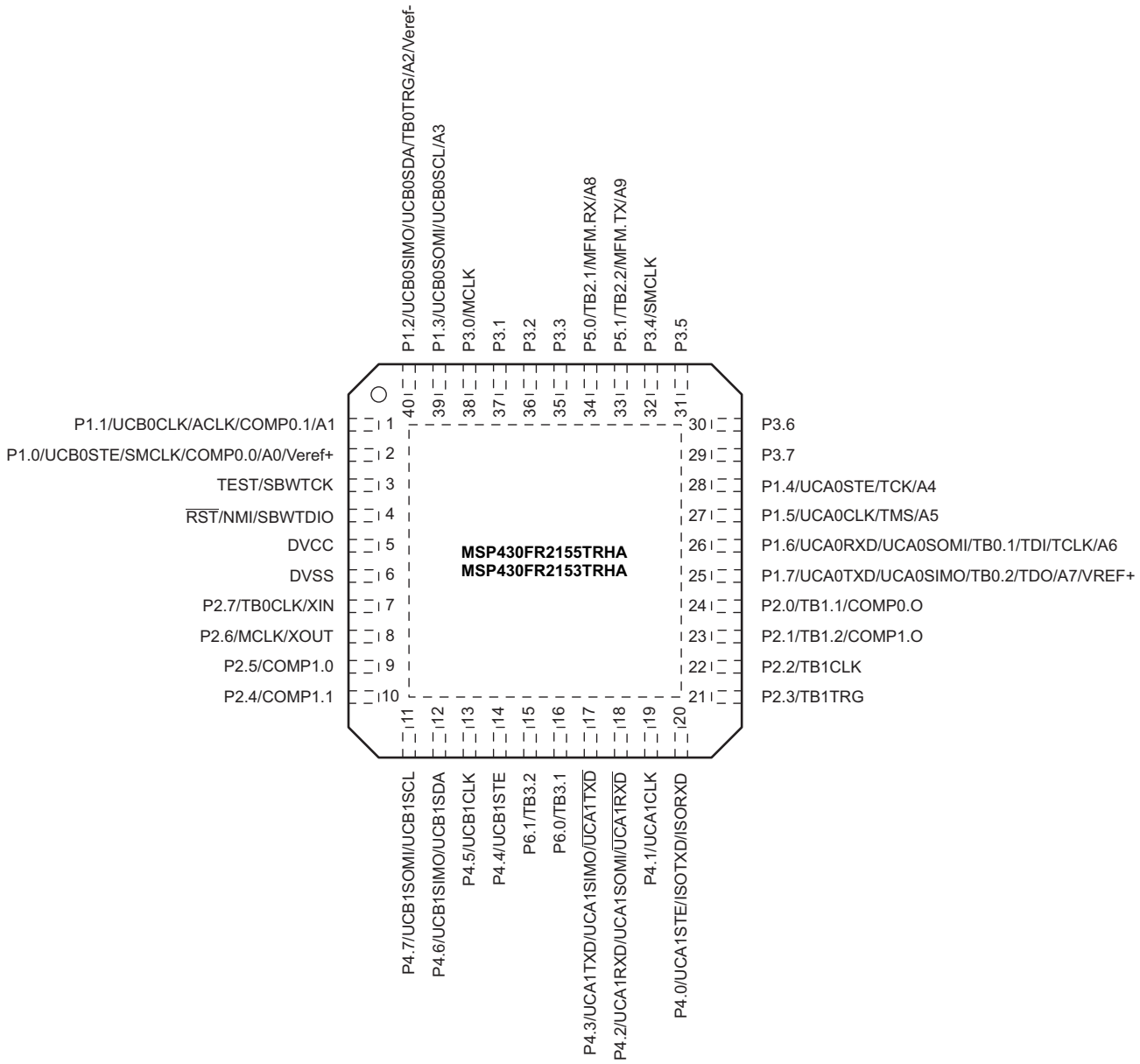

NOTE: Connect the exposed thermal pad to VSS.

图 4-6. 40-Pin RHA (VQFN) (Top View) – MSP430FR215x

图 4-7 shows the pinout of the 38-pin DBT package for the MSP430FR215x MCUs.

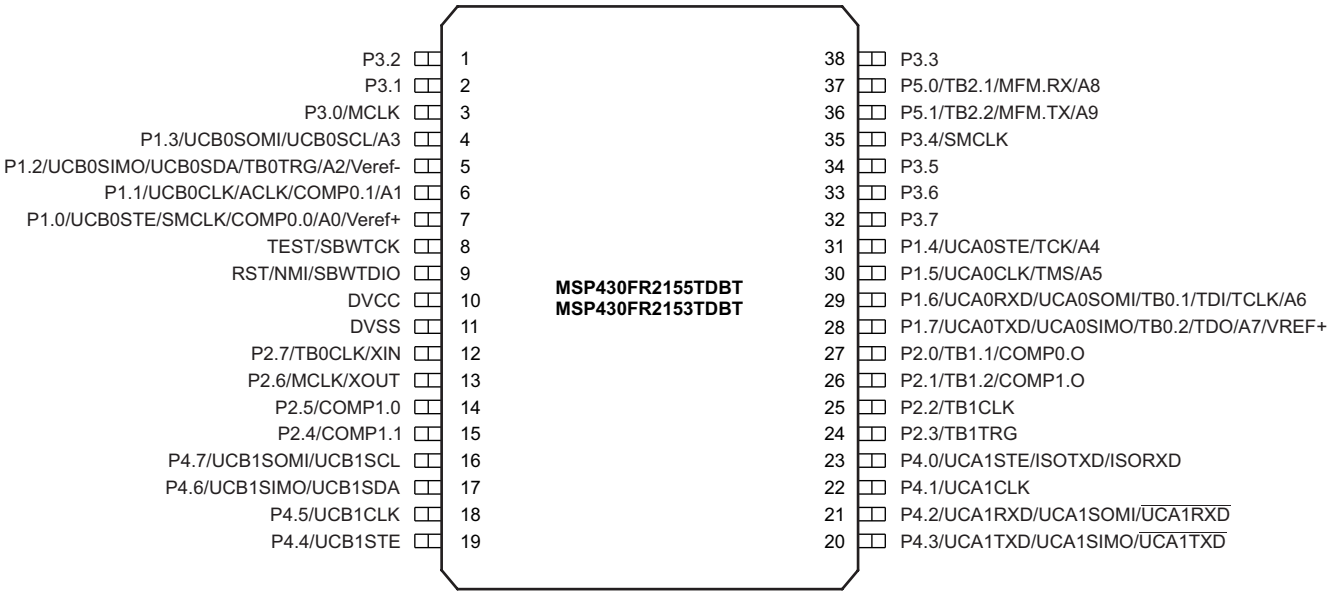

图 4-7. 38-Pin DBT (TSSOP) (Top View) – MSP430FR215x

版权 © 2018–2019, Texas Instruments Incorporated

图 4-8 shows the pinout of the 32-pin RSM package for the MSP430FR215x MCUs.

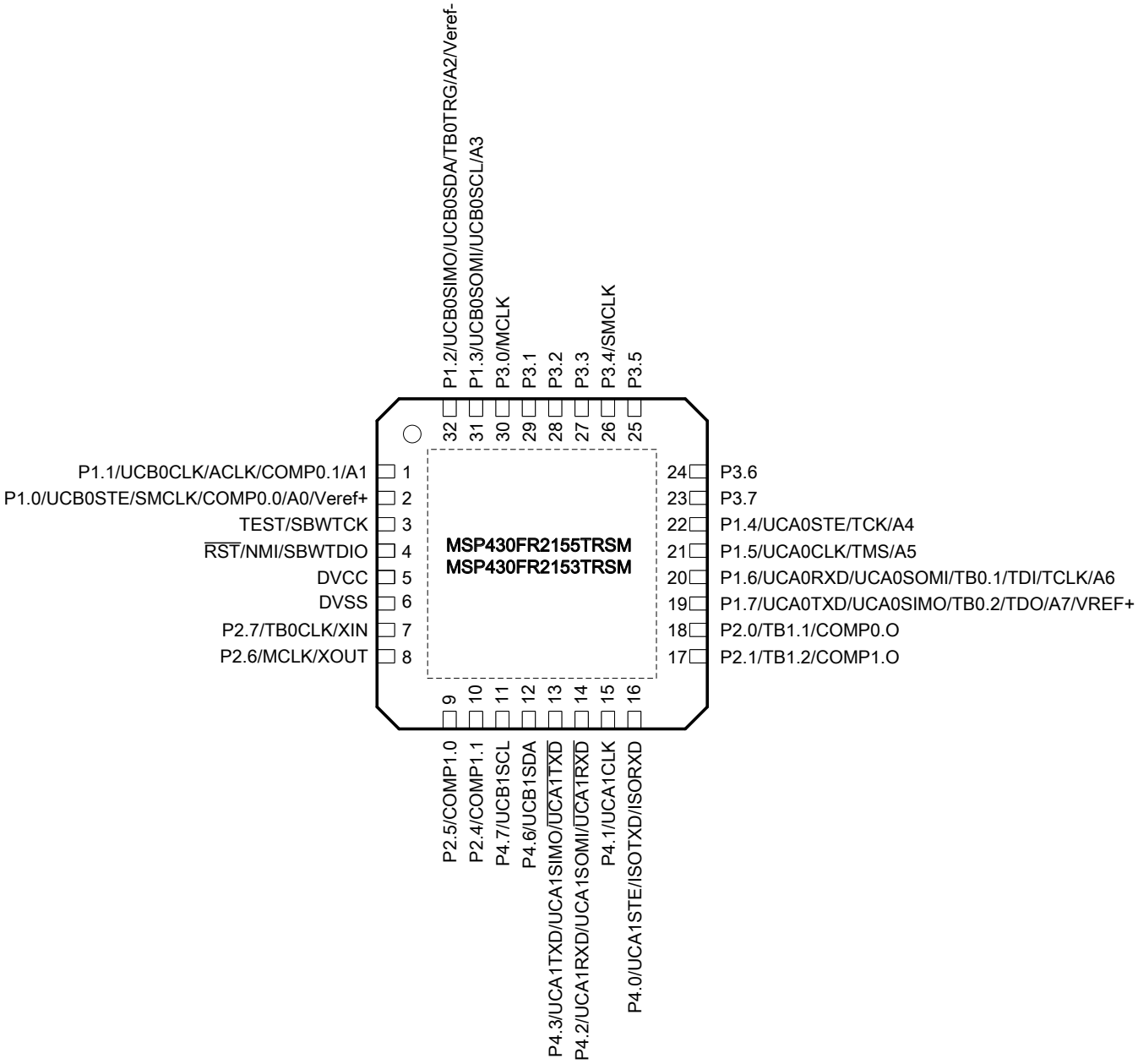

NOTE: Connect the exposed thermal pad to VSS.

图 4-8. 32-Pin RSM (VQFN) (Top View) – MSP430FR215x

4.2 Pin Attributes

表 4-1 lists the attributes of all pins.

表 4-1. Pin Attributes

PIN NUMBER				SIGNAL NAME(1) (2)	SIGNAL TYPE(3)	BUFFER TYPE(4)	POWER SOURCE	RESET STATE AFTER BOR(5)
PT	RHA	DBT	RSM					
1	40	5	32	P1.2 (RD)	I/O	LVCMOS	DVCC	OFF
				UCB0SIMO	I/O	LVCMOS	DVCC	–
				UCB0SDA	I/O	LVCMOS	DVCC	–
				TB0TRG	I	LVCMOS	DVCC	–
				OA0-(6)	I	Analog	DVCC	–
				A2	I	Analog	DVCC	–
				Veref-	I	Analog	DVCC	–
2	1	6	1	P1.1 (RD)	I/O	LVCMOS	DVCC	OFF
				UCB0CLK	I/O	LVCMOS	DVCC	–
				ACLK	O	LVCMOS	DVCC	–
				OA0O(6)	O	Analog	DVCC	–
				COMP0_1	I	Analog	DVCC	–
				A1	I	Analog	DVCC	–
3	2	7	2	P1.0 (RD)	I/O	LVCMOS	DVCC	OFF
				UCB0STE	I/O	LVCMOS	DVCC	–
				SMCLK	O	LVCMOS	DVCC	–
				COMP0_0	I	Analog	DVCC	–
				A0	I	Analog	DVCC	–
				Veref+	I	Analog	DVCC	–
4	3	8	3	TEST (RD)	I	LVCMOS	DVCC	OFF
				SBWTCK	I	LVCMOS	DVCC	–
5	4	9	4	$\overline{\text{RST}}$ (RD)	I/O	LVCMOS	DVCC	OFF
				NMI	I	LVCMOS	DVCC	–
				SBWTDIO	I/O	LVCMOS	DVCC	–
6	5	10	5	DVCC	P	Power	DVCC	N/A
7	6	11	6	DVSS	P	Power	DVCC	N/A
8	7	12	7	P2.7 (RD)	I/O	LVCMOS	DVCC	OFF
				TB0CLK	I	LVCMOS	DVCC	–
				XIN	I	LVCMOS	DVCC	–
9	8	13	8	P2.6 (RD)	I/O	LVCMOS	DVCC	OFF
				MCLK	O	LVCMOS	DVCC	–
				XOUT	O	LVCMOS	DVCC	–
10	9	14	9	P2.5 (RD)	I/O	LVCMOS	DVCC	OFF
				COMP1.0	I	Analog	DVCC	–
11	10	15	10	P2.4 (RD)	I/O	LVCMOS	DVCC	OFF
				COMP1.1	I	Analog	DVCC	–

(1) Signals names with (RD) denote the reset default pin name.
(2) To determine the pin mux encodings for each pin, see 节 6.11.
(3) Signal types: I = input, O = output, I/O = input or output
(4) Buffer types: LVCMOS, analog, or power
(5) Reset states:
OFF = High-impedance input with pullup or pulldown disabled (if available)
N/A = Not applicable
(6) MSP430FR235x devices only

版权 © 2018–2019, Texas Instruments Incorporated

表 4-1. Pin Attributes (continued)

PIN NUMBER				SIGNAL NAME(1) (2)	SIGNAL TYPE(3)	BUFFER TYPE(4)	POWER SOURCE	RESET STATE AFTER BOR(5)
PT	RHA	DBT	RSM					
12	11	16	11	P4.7 (RD)	I/O	LVCMOS	DVCC	OFF
				UCB1SOMI(7)	I/O	LVCMOS	DVCC	–
				UCB1SCL	I/O	LVCMOS	DVCC	–
13	12	17	12	P4.6 (RD)	I/O	LVCMOS	DVCC	OFF
				UCB1SIMO(7)	I/O	LVCMOS	DVCC	–
				UCB1SDA	I/O	LVCMOS	DVCC	–
14	13	18	–	P4.5 (RD)	I/O	LVCMOS	DVCC	OFF
				UCB1CLK	I/O	LVCMOS	DVCC	–
15	14	19	–	P4.4 (RD)	I/O	LVCMOS	DVCC	OFF
				UCB1STE	I/O	LVCMOS	DVCC	–
16	–	–	–	P6.6 (RD)	I/O	LVCMOS	DVCC	OFF
				TB3CLK	I	LVCMOS	DVCC	–
17	–	–	–	P6.5 (RD)	I/O	LVCMOS	DVCC	OFF
				TB3.6	I/O	LVCMOS	DVCC	–
18	–	–	–	P6.4 (RD)	I/O	LVCMOS	DVCC	OFF
				TB3.5	I/O	LVCMOS	DVCC	–
19	–	–	–	P6.3 (RD)	I/O	LVCMOS	DVCC	OFF
				TB3.4	I/O	LVCMOS	DVCC	–
20	–	–	–	P6.2 (RD)	I/O	LVCMOS	DVCC	OFF
				TB3.3	I/O	LVCMOS	DVCC	–
21	15	–	–	P6.1 (RD)	I/O	LVCMOS	DVCC	OFF
				TB3.2	I/O	LVCMOS	DVCC	–
22	16	–	–	P6.0 (RD)	I/O	LVCMOS	DVCC	OFF
				TB3.1	I/O	LVCMOS	DVCC	–
23	17	20	13	P4.3 (RD)	I/O	LVCMOS	DVCC	OFF
				UCA1TXD	O	LVCMOS	DVCC	–
				UCA1SIMO	I/O	LVCMOS	DVCC	–
				$\overline{\text{UCA1TXD}}$	O	LVCMOS	DVCC	–
24	18	21	14	P4.2 (RD)	I/O	LVCMOS	DVCC	OFF
				UCA1RXD	I	LVCMOS	DVCC	–
				UCA1SOMI	I/O	LVCMOS	DVCC	–
				$\overline{\text{UCA1RXD}}$	I	LVCMOS	DVCC	–
25	19	22	15	P4.1 (RD)	I/O	LVCMOS	DVCC	OFF
				UCA1CLK	I/O	LVCMOS	DVCC	–
26	20	23	16	P4.0 (RD)	I/O	LVCMOS	DVCC	OFF
				UCA1STE	I/O	LVCMOS	DVCC	–
				ISOTXD	O	LVCMOS	DVCC	–
				ISORXD	I	LVCMOS	DVCC	–
27	21	24	–	P2.3 (RD)	I/O	LVCMOS	DVCC	OFF
				TB1TRG	I	LVCMOS	DVCC	–
28	22	25	–	P2.2 (RD)	I/O	LVCMOS	DVCC	OFF
				TB1CLK	I	LVCMOS	DVCC	–
29	23	26	17	P2.1(RD)	I/O	LVCMOS	DVCC	OFF
				TB1.2	I/O	LVCMOS	DVCC	–
				COMP1.O	O	LVCMOS	DVCC	–

(7) Not applicable in RSM package.

版权 © 2018–2019, Texas Instruments Incorporated

表 4-1. Pin Attributes (continued)

PIN NUMBER				SIGNAL NAME(1) (2)	SIGNAL TYPE(3)	BUFFER TYPE(4)	POWER SOURCE	RESET STATE AFTER BOR(5)
PT	RHA	DBT	RSM					
30	24	27	18	P2.0 (RD)	I/O	LVCMOS	DVCC	OFF
				TB1.1	I/O	LVCMOS	DVCC	–
				COMP0.O	O	LVCMOS	DVCC	–
31	25	28	19	P1.7 (RD)	I/O	LVCMOS	DVCC	OFF
				UCA0TXD	O	LVCMOS	DVCC	–
				UCA0SIMO	I/O	LVCMOS	DVCC	–
				TB0.2	I/O	LVCMOS	DVCC	–
				TDO	O	LVCMOS	DVCC	–
				OA1+(6)	I	Analog	DVCC	–
				A7	I	Analog	DVCC	–
				VREF+	O	Analog	DVCC	–
32	26	29	20	P1.6 (RD)	I/O	LVCMOS	DVCC	OFF
				UCA0RXD	I	LVCMOS	DVCC	–
				UCA0SOMI	I/O	LVCMOS	DVCC	–
				TB0.1	I/O	LVCMOS	DVCC	–
				TDI	I	LVCMOS	DVCC	–
				TCLK	I	LVCMOS	DVCC	–
				OA1-(6)	I	Analog	DVCC	–
				A6	I	Analog	DVCC	–
33	27	30	21	P1.5 (RD)	I/O	LVCMOS	DVCC	OFF
				UCA0CLK	I/O	LVCMOS	DVCC	–
				TMS	I	LVCMOS	DVCC	–
				OA1O(6)	O	Analog	DVCC	-
				A5	I	Analog	DVCC	–
34	28	31	22	P1.4 (RD)	I/O	LVCMOS	DVCC	OFF
				UCA0STE	I/O	LVCMOS	DVCC	–
				TCK	I	LVCMOS	DVCC	–
				A4	I	Analog	DVCC	–
35	29	32	23	P3.7 (RD)	I/O	LVCMOS	DVCC	OFF
				OA3+(6)	I	Analog	DVCC	–
36	30	33	24	P3.6 (RD)	I/O	LVCMOS	DVCC	OFF
				OA3-(6)	I	Analog	DVCC	–
37	31	34	25	P3.5 (RD)	I/O	LVCMOS	DVCC	OFF
				OA3O(6)	O	Analog	DVCC	–
38	32	35	26	P3.4 (RD)	I/O	LVCMOS	DVCC	OFF
				SMCLK	O	LVCMOS	DVCC	–
39	–	–	–	P5.4 (RD)	I/O	LVCMOS	DVCC	OFF
40	–	–	–	P5.3 (RD)	I/O	LVCMOS	DVCC	OFF
				TB2TRG	I	LVCMOS	DVCC	–
				A11	I	Analog	DVCC	–
41	–	–	–	P5.2 (RD)	I/O	LVCMOS	DVCC	OFF
				TB2CLK	I	LVCMOS	DVCC	–
				A10	I	Analog	DVCC	–

版权 © 2018–2019, Texas Instruments Incorporated

表 4-1. Pin Attributes (continued)

PIN NUMBER				SIGNAL NAME(1) (2)	SIGNAL TYPE(3)	BUFFER TYPE(4)	POWER SOURCE	RESET STATE AFTER BOR(5)
PT	RHA	DBT	RSM					
42	33	36	–	P5.1 (RD)	I/O	LVCMOS	DVCC	OFF
				TB2.2	I/O	LVCMOS	DVCC	–
				MFM.TX	O	LVCMOS	DVCC	–
				A9	I	Analog	DVCC	–
43	34	37	–	P5.0 (RD)	I/O	LVCMOS	DVCC	OFF
				TB2.1	I/O	LVCMOS	DVCC	–
				MFM.RX	I	LVCMOS	DVCC	–
				A8	I	Analog	DVCC	–
44	35	38	27	P3.3 (RD)	I/O	LVCMOS	DVCC	OFF
				OA2+(6)	I	Analog	DVCC	–
45	36	1	28	P3.2 (RD)	I/O	LVCMOS	DVCC	OFF
				OA2-(6)	I	Analog	DVCC	–
46	37	2	29	P3.1 (RD)	I/O	LVCMOS	DVCC	OFF
				OA2O(6)	O	Analog	DVCC	–
47	38	3	30	P3.0 (RD)	I/O	LVCMOS	DVCC	OFF
				MCLK	O	LVCMOS	DVCC	–
48	39	4	31	P1.3 (RD)	I/O	LVCMOS	DVCC	OFF
				UCB0SOMI	I/O	LVCMOS	DVCC	–
				UCB0SCL	I/O	LVCMOS	DVCC	–
				OA0+(6)	I	Analog	DVCC	–
				A3	I	Analog	DVCC	–

版权 © 2018–2019, Texas Instruments Incorporated

4.3 Signal Descriptions

表 4-2 describes the signals for all device variants and package options.

表 4-2. Signal Descriptions

FUNCTION	SIGNAL NAME	PIN NUMBER(1)				PIN TYPE(2)	DESCRIPTION
		PT	RHA	DBT	RSM		
ADC	A0	3	2	7	2	I	Analog input A0
	A1	2	1	6	1	I	Analog input A1
	A2	1	40	5	32	I	Analog input A2
	A3	48	39	4	31	I	Analog input A3
	A4	34	28	31	22	I	Analog input A4
	A5	33	27	30	21	I	Analog input A5
	A6	32	26	29	20	I	Analog input A6
	A7	31	25	28	19	I	Analog input A7
	A8	43	34	37	–	I	Analog input A8
	A9	42	33	36	–	I	Analog input A9
	A10	41	–	–	–	I	Analog input A10
	A11	40	–	–	–	I	Analog input A11
	Veref+	3	2	7	2	I	ADC positive reference
	Veref-	1	40	5	32	I	ADC negative reference
eCOMP0	C0	3	2	7	2	I	Comparator input channel C0
	C1	2	1	6	1	I	Comparator input channel C1
	COUT	30	24	27	18	O	Comparator output channel COUT
eCOMP1	C0	10	9	14	9	I	Comparator input channel C0
	C1	11	10	15	10	I	Comparator input channel C1
	COUT	29	23	26	17	O	Comparator output channel COUT
SAC0(3)	OA0+	48	39	4	31	I	SAC0, OA positive input
	OA0-	1	40	5	32	I	SAC0, OA negative input
	OA0O	2	1	6	1	O	SAC0, OA output
SAC1(3)	OA1+	31	25	28	19	I	SAC1, OA positive input
	OA1-	32	26	29	20	I	SAC1, OA negative input
	OA1O	33	27	30	21	O	SAC1, OA output
SAC2(3)	OA2+	44	35	38	27	I	SAC2, OA positive input
	OA2-	45	36	1	28	I	SAC2, OA negative input
	OA2O	46	37	2	29	O	SAC2, OA output
SAC3(3)	OA3+	35	29	32	23	I	SAC3, OA positive input
	OA3-	36	30	33	24	I	SAC3, OA negative input
	OAO	37	31	34	25	O	SAC3, OA output
Clock	ACLK	2	1	6	1	O	ACLK output
	MCLK	9	8	13	8	O	MCLK output
		47	38	3	30	O	
	SMCLK	3	2	7	2	O	SMCLK output
		38	32	35	26	O	
	XIN	8	7	12	7	I	Input terminal for crystal oscillator
	XOUT	9	8	13	8	O	Output terminal for crystal oscillator

(1) Any pin that is not bonded out in a smaller package must be initialized by software after reset to achieve the lowest leakage current.
(2) I = input, O = output, I/O = input/output, P = power
(3) MSP430FR235x devices only

版权 © 2018–2019, Texas Instruments Incorporated

表 4-2. Signal Descriptions (continued)

FUNCTION	SIGNAL NAME	PIN NUMBER(1)				PIN TYPE(2)	DESCRIPTION
		PT	RHA	DBT	RSM		
Debug	SBWTCK	4	3	8	3	I	Spy-Bi-Wire input clock
	SBWTDIO	5	4	9	4	I/O	Spy-Bi-Wire data input/output
	TCK	34	28	31	22	I	Test clock
	TCLK	32	26	29	20	I	Test clock input
	TDI	32	26	29	20	I	Test data input
	TDO	31	25	28	19	O	Test data output
	TMS	33	27	30	21	I	Test mode select
	TEST	4	3	8	3	I	Test mode pin – selected digital I/O on JTAG pins
System	NMI	5	4	9	4	I	Nonmaskable interrupt input
	$\overline{\text{RST}}$	5	4	9	4	I/O	Reset input, active-low
Power	DVCC	6	5	10	5	P	Power supply
	DVSS	7	6	11	6	P	Power ground
	VREF+	31	25	28	19	P	Output of positive reference voltage with ground as reference
GPIO, Port 1	P1.0	3	2	7	2	I/O	General-purpose I/O
	P1.1	2	1	6	1	I/O	General-purpose I/O
	P1.2	1	40	5	32	I/O	General-purpose I/O
	P1.3	48	39	4	31	I/O	General-purpose I/O
	P1.4	34	28	31	22	I/O	General-purpose I/O (4)
	P1.5	33	27	30	21	I/O	General-purpose I/O (4)
	P1.6	32	26	29	20	I/O	General-purpose I/O(4)
	P1.7	31	25	28	19	I/O	General-purpose I/O(4)
GPIO, Port 2	P2.0	30	24	27	18	I/O	General-purpose I/O
	P2.1	29	23	26	17	I/O	General-purpose I/O
	P2.2	28	22	25	–	I/O	General-purpose I/O
	P2.3	27	21	24	–	I/O	General-purpose I/O
	P2.4	11	10	15	10	I/O	General-purpose I/O
	P2.5	10	9	14	9	I/O	General-purpose I/O
	P2.6	9	8	13	8	I/O	General-purpose I/O
	P2.7	8	7	12	7	I/O	General-purpose I/O
GPIO, Port 3	P3.0	47	38	3	30	I/O	General-purpose I/O
	P3.1	46	37	2	29	I/O	General-purpose I/O
	P3.2	45	36	1	28	I/O	General-purpose I/O
	P3.3	44	35	38	27	I/O	General-purpose I/O
	P3.4	38	32	35	26	I/O	General-purpose I/O
	P3.5	37	31	34	25	I/O	General-purpose I/O
	P3.6	36	30	33	24	I/O	General-purpose I/O
	P3.7	35	29	32	23	I/O	General-purpose I/O

(4) Because this pin is multiplexed with the JTAG function, TI recommends disabling the pin interrupt function while in JTAG debug to prevent collisions.
Functions shared with these four pins cannot be debugged if 4-wire JTAG is used for debug.

版权 © 2018–2019, Texas Instruments Incorporated

表 4-2. Signal Descriptions (continued)

FUNCTION	SIGNAL NAME	PIN NUMBER(1)				PIN TYPE(2)	DESCRIPTION
		PT	RHA	DBT	RSM		
GPIO, Port 4	P4.0	26	20	23	16	I/O	General-purpose I/O
	P4.1	25	19	22	15	I/O	General-purpose I/O
	P4.2	24	18	21	14	I/O	General-purpose I/O
	P4.3	23	17	20	13	I/O	General-purpose I/O
	P4.4	15	14	19	–	I/O	General-purpose I/O
	P4.5	14	13	18	–	I/O	General-purpose I/O
	P4.6	13	12	17	12	I/O	General-purpose I/O
	P4.7	12	11	16	11	I/O	General-purpose I/O
GPIO, Port 5	P5.0	43	34	37	–	I/O	General-purpose I/O
	P5.1	42	33	36	–	I/O	General-purpose I/O
	P5.2	41	–	–	–	I/O	General-purpose I/O
	P5.3	40	–	–	–	I/O	General-purpose I/O
	P5.4	39	–	–	–	I/O	General-purpose I/O
GPIO, Port 6	P6.0	22	16	–	–	I/O	General-purpose I/O
	P6.1	21	15	–	–	I/O	General-purpose I/O
	P6.2	20	–	–	–	I/O	General-purpose I/O
	P6.3	19	–	–	–	I/O	General-purpose I/O
	P6.4	18	–	–	–	I/O	General-purpose I/O
	P6.5	17	–	–	–	I/O	General-purpose I/O
	P6.6	16	–	–	–	I/O	General-purpose I/O
UART	UCA0TXD	31	25	28	19	O	eUSCI_A0 UART transmit data
	UCA0RXD	32	26	29	20	I	eUSCI_A0 UART receive data
	UCA1TXD	23	17	20	13	O	eUSCI_A1 UART transmit data
	UCA1RXD	24	18	21	14	I	eUSCI_A1 UART receive data
ISO	ISOTXD	26	20	23	16	O	ISO transmit data (the logical AND product of UCA1TXD and TB3.2B)
	ISORXD	26	20	23	16	I	ISO receive data (to UCA1RXD and TB3.CCI2B)
SPI	UCA0STE	34	28	31	22	I/O	eUSCI_A0 SPI slave transmit enable
	UCA0CLK	33	27	30	21	I/O	eUSCI_A0 SPI clock input/output
	UCA0SOMI	32	26	29	20	I/O	eUSCI_A0 SPI slave out/master in
	UCA0SIMO	31	25	28	19	I/O	eUSCI_A0 SPI slave in/master out
	UCA1STE	26	20	23	16	I/O	eUSCI_A1 SPI slave transmit enable
	UCA1CLK	25	19	22	15	I/O	eUSCI_A1 SPI clock input/output
	UCA1SOMI	24	18	21	14	I/O	eUSCI_A1 SPI slave out/master in
	UCA1SIMO	23	17	20	13	I/O	eUSCI_A1 SPI slave in/master out
	UCB0STE	3	2	7	2	I/O	eUSCI_B0 slave transmit enable
	UCB0CLK	2	1	6	1	I/O	eUSCI_B0 clock input/output
	UCB0SIMO	1	40	5	32	I/O	eUSCI_B0 SPI slave in/master out
	UCB0SOMI	48	39	4	31	I/O	eUSCI_B0 SPI slave out/master in
	UCB1STE	15	14	19	–	I/O	eUSCI_B1 slave transmit enable
	UCB1CLK	14	13	18	–	I/O	eUSCI_B1 clock input/output
	UCB1SIMO	13	12	17	–	I/O	eUSCI_B1 SPI slave in/master out
	UCB1SOMI	12	11	16	–	I/O	eUSCI_B1 SPI slave out/master in
I^2C	UCB0SCL	48	39	4	31	I/O	eUSCI_B0 I^2C clock
	UCB0SDA	1	40	5	32	I/O	eUSCI_B0 I^2C data
	UCB1SCL	12	11	16	11	I/O	eUSCI_B1 I^2C clock
	UCB1SDA	13	12	17	12	I/O	eUSCI_B1 I^2C data

版权 © 2018–2019, Texas Instruments Incorporated

表 4-2. Signal Descriptions (continued)

FUNCTION	SIGNAL NAME	PIN NUMBER(1)				PIN TYPE(2)	DESCRIPTION
		PT	RHA	DBT	RSM		
Timer_B	TB0.1	32	26	29	20	I/O	Timer TB0 CCR1 capture: CCI1A input, compare: Out1 output
	TB0.2	31	25	28	19	I/O	Timer TB0 CCR2 capture: CCI2A input compare: Out2 output
	TB0TRG	1	40	5	32	I	TB0 external trigger input for TB0OUTH
	TB0CLK	8	7	12	7	I	Timer clock input TBCLK for TB0
	TB1.1	30	24	27	18	I/O	Timer TB1 CCR1 capture: CCI1A input compare: Out1 output
	TB1.2	29	23	26	17	I/O	Timer TB1 CCR2 capture: CCI2A input compare: Out2 output
	TB1CLK	28	22	25	–	I	Timer clock input TBCLK for TB1
	TB1TRG	27	21	24	–	I	TB1 external trigger input for TB1OUTH
	TB2.1	43	34	37	–	I/O	Timer TB2 CCR1 capture: CCI1A input compare: Out1 output
	TB2.2	42	33	36	–	I/O	Timer TB2 CCR2 capture: CCI2A input compare: Out2 output
	TB2CLK	41	–	–	–	I	Timer clock input TBCLK for TB2
	TB2TRG	40	–	–	–	I	TB2 external trigger input for TB2OUTH
	TB3.1	22	16	–	–	I/O	Timer TB3 CCR1 capture: CCI1A input compare: Out1 output
	TB3.2	21	15	–	–	I/O	Timer TB3 CCR2 capture: CCI2A input compare: Out2 output
	TB3.3	20	–	–	–	I/O	Timer TB3 CCR3 capture: CCI3A input compare: Out3 output
	TB3.4	19	–	–	–	I/O	Timer TB3 CCR4 capture: CCI4A input compare: Out4 output
	TB3.5	18	–	–	–	I/O	Timer TB3 CCR5 capture: CCI5A input compare: Out5 outputs
	TB3.6	17	–	–	–	I/O	Timer TB3 CCR6 capture: CCI6A input compare: Out6 output
	TB3CLK	16	–	–	–	I	Timer clock input TBCLK for TB3
MFM	TX	42	33	36	–	O	Manchester function module transmit
	RX	43	34	37	–	I	Manchester function module receive
VQFN thermal pad		–	Pad	–	Pad	–	Connect the exposed thermal pad to VSS.

4.4 Pin Multiplexing

Pin multiplexing for these devices is controlled by both register settings and operating modes (for example, if the device is in test mode). For details of the settings for each pin and diagrams of the multiplexed ports, see 节 6.11.

4.5 Buffer Type

表 4-3 defines the pin buffer types that are listed in 表 4-1.

表 4-3. Buffer Type

BUFFER TYPE (STANDARD)	NOMINAL VOLTAGE	HYSTERESIS	PU OR PD	NOMINAL PU OR PD STRENGTH (µA)	OUTPUT DRIVE STRENGTH (mA)	OTHER CHARACTERISTICS
LVCMOS	3.0 V	Y (1)	Programmable	See 节 5.12.5	See 节 5.12.5	
Analog	3.0 V	N	N/A	N/A	N/A	See the analog modules in 节 5 for details
Power (DVCC)	3.0 V	N	N/A	N/A	N/A	SVS enables hysteresis on DVCC
Power (AVCC)	3.0 V	N	N/A	N/A	N/A	

(1) Only for input pins

4.6 Connection of Unused Pins

表 4-4 lists the correct termination of unused pins.

表 4-4. Connection of Unused Pins(1)

PIN	POTENTIAL	COMMENT
Px.0 to Px.7	Open	Set to port function, output direction (PxDIR.n = 1)
$\overline{\text{RST}}$/NMI	DVCC	47-kΩ pullup or internal pullup selected with 10-nF (or 1.1-nF) pulldown(2)
TEST	Open	This pin always has an internal pulldown enabled.

(1) Any unused pin with a secondary function that is shared with general-purpose I/O should follow the Px.0 to Px.7 unused pin connection guidelines.
(2) The pulldown capacitor should not exceed 1.1 nF when using devices with Spy-Bi-Wire interface in Spy-Bi-Wire mode with TI tools like FET interfaces or GANG programmers.

版权 © 2018–2019, Texas Instruments Incorporated

5 Specifications

5.1 Absolute Maximum Ratings(1)

over operating free-air temperature range (unless otherwise noted)

	DEVICE GRADE	MIN	MAX	UNIT
Voltage applied at DVCC pin to V_{SS}	T	–0.3	4.1	V
Voltage applied to any pin(2)	T	–0.3	V_{CC} + 0.3 4.1 V Max	V
Current across the whole chip including IO currents	T		+50	mA
Diode current at any device pin	T		±2	mA
Maximum junction temperature, T_J	T		115	°C
Storage temperature, T_{stg} (3)	T	–40	125	°C

(1) Stresses beyond those listed under *Absolute Maximum Ratings* can cause permanent damage to the device. These are stress ratings only, and functional operation of the device at these or any other conditions beyond those indicated under *Recommended Operating Conditions* is not implied. Exposure to absolute-maximum-rated conditions for extended periods can affect device reliability.
(2) All voltages referenced to V_{SS}.
(3) Higher temperature may be applied during board soldering according to the current JEDEC J-STD-020 specification with peak reflow temperatures not higher than classified on the device label on the shipping boxes or reels.

5.2 ESD Ratings

over operating free-air temperature range (unless otherwise noted)

			DEVICE GRADE	VALUE	UNIT
$V_{(ESD)}$	Electrostatic discharge	Human-body model (HBM), per ANSI/ESDA/JEDEC JS-001(1)	T	±1000	V
		Charged-device model (CDM), per JEDEC specification JESD22-C101(2)	T	±250	

(1) JEDEC document JEP155 states that 500-V HBM allows safe manufacturing with a standard ESD control process. Manufacturing with less than 500-V HBM is possible with the necessary precautions. Pins listed as ±1000 V may actually have higher performance.
(2) JEDEC document JEP157 states that 250-V CDM allows safe manufacturing with a standard ESD control process. Manufacturing with less than 250-V CDM is possible with the necessary precautions. Pins listed as ±250 V may actually have higher performance.

5.3 Recommended Operating Conditions

			DEVICE GRADE	MIN	NOM	MAX	UNIT
V_{CC}	Supply voltage applied at DVCC pin(1) (2)(3) (4)		T	1.8		3.6	V
V_{SS}	Supply voltage applied at DVSS pin		T		0		V
T_A	Operating free-air temperature		T	–40		105	°C
T_J	Operating junction temperature		T	–40		115	°C
C_{DVCC}	Recommended capacitor at DVCC(5)		T	4.7	10		µF
f_{SYSTEM}	Processor frequency (maximum MCLK frequency)(4)(6)	No FRAM wait states (NWAITSx = 0)	T	0		8	MHz
		With FRAM wait states (NWAITSx = 1)(7)	T	0		16	
		With FRAM wait states (NWAITSx = 2)(7)	T	0		24(8)	

(1) Supply voltage changes faster than 0.2 V/µs can trigger a BOR reset even within the recommended supply voltage range. Following the data sheet recommendation for capacitor C_{DVCC} limits the slopes accordingly.
(2) Modules can have a different supply voltage range specification. See the specification of the respective module in this data sheet.
(3) TI recommends that power to the DVCC pin must not exceed the limits specified in *Recommended Operating Conditions*. Exceeding the specified limits can cause malfunction of the device including erroneous writes to RAM and FRAM.
(4) The minimum supply voltage is defined by the SVS levels. See the SVS threshold parameters in 表 5-1.
(5) A capacitor tolerance of ±20% or better is required. A low-ESR ceramic capacitor of 100 nF (minimum) should be placed as close as possible (within a few millimeters) to the respective pin pair.
(6) Modules can have a different maximum input clock specification. See the specification of the respective module in this data sheet.
(7) Wait states only occur on actual FRAM accesses (that is, on FRAM cache misses). RAM and peripheral accesses are always executed without wait states.
(8) If clock sources such as HF crystals or the DCO with frequencies >24 MHz are used, the clock must be divided in the clock system to comply with this operating condition.

版权 © 2018–2019, Texas Instruments Incorporated

Recommended Operating Conditions *(continued)*

		DEVICE GRADE	MIN	NOM	MAX	UNIT
f_{ACLK}	Maximum ACLK frequency	T			40	kHz
f_{SMCLK}	Maximum SMCLK frequency	T			24 (8)	MHz

5.4 Active Mode Supply Current Into V_{CC} Excluding External Current

over operating free-air temperature range (unless otherwise noted) (1)

PARAMETER	EXECUTION MEMORY	TEST CONDITIONS	DEVICE GRADE	Frequency (f_{MCLK} = f_{SMCLK})				UNIT
				1 MHz 0 WAIT STATES (NWAITSx = 0)	8 MHz 0 WAIT STATES (NWAITSx = 0)	16 MHz 1 WAIT STATE (NWAITSx = 1)	24 MHz 2 WAIT STATES (NWAITSx = 2)	
				TYP MAX	TYP MAX	TYP MAX	TYP MAX	
$I_{AM,\ FRAM}$(0%)	FRAM 0% cache hit ratio	3.0 V, 25°C	T	555	3084	3411	3692	µA
		3.0 V, 85°C	T	575	3207	3519	3807	
		3.0 V, 105°C	T	583	3233	3545	3833	
$I_{AM,\ FRAM}$(100%)	FRAM 100% cache hit ratio	3.0 V, 25°C	T	261	724	1245	1772	µA
		3.0 V, 85°C	T	272	742	1267	1800	
		3.0 V, 105°C	T	283	753	1281	1817	
$I_{AM,\ RAM}$ (2)	RAM	3.0 V, 25°C	T	285	917	1627	2355	µA

(1) All inputs are tied to 0 V or to V_{CC}. Outputs do not source or sink any current. Characterized with program executing typical data processing.
f_{ACLK} = 32768 Hz, f_{MCLK} = f_{SMCLK} = f_{DCO} at specified frequency
Program and data entirely reside in FRAM. All execution is from FRAM.
(2) Program and data reside entirely in RAM. All execution is from RAM. No access to FRAM.

5.5 Active Mode Supply Current Per MHz

V_{CC} = 3.0 V, T_A = 25°C (unless otherwise noted)

PARAMETER		TEST CONDITIONS	DEVICE GRADE	MIN	TYP	MAX	UNIT
$dI_{AM,FRAM}/df$	Active mode current consumption per MHz, execution from FRAM, no wait states (1)	($I_{AM,\ 75\%\ cache\ hit\ rate}$ at 8 MHz – $I_{AM,\ 75\%\ cache\ hit\ rate}$ at 1 MHz) / 7 MHz	T		142		µA/MHz

(1) All peripherals are turned on in default settings.

5.6 Low-Power Mode LPM0 Supply Currents Into V_{CC} Excluding External Current

V_{CC} = 3.0 V, T_A = 25°C (unless otherwise noted) (1) (2)

PARAMETER		V_{CC}	DEVICE GRADE	FREQUENCY (f_{SMCLK})				UNIT
				1 MHz	8 MHz	16 MHz	24 MHz	
				TYP MAX	TYP MAX	TYP MAX	TYP MAX	
I_{LPM0}	Low-power mode 0 supply current	2.0 V	T	199	312	437	637	µA
		3.0 V	T	211	324	449	649	

(1) All inputs are tied to 0 V or to V_{CC}. Outputs do not source or sink any current.
(2) Current for watchdog timer clocked by SMCLK included.
f_{ACLK} = 32768 Hz, f_{MCLK} = 0 MHz, f_{SMCLK} at specified frequency.

版权 © 2018–2019, Texas Instruments Incorporated

5.7 Low-Power Mode LPM3 and LPM4 Supply Currents (Into V_{CC}) Excluding External Current

over recommended ranges of supply voltage and operating free-air temperature (unless otherwise noted) (1)

PARAMETER		DEVICE GRADE	V_{CC}	–40°C		25°C		85°C		105°C		UNIT
				TYP	MAX	TYP	MAX	TYP	MAX	TYP	MAX	
$I_{LPM3,XT1}$	Low-power mode 3, includes SVS (2) (3) (4)	T	3.0 V	1.21		1.49		6.35	21.85	13.29	47.87	µA
$I_{LPM3,XT1}$	Low-power mode 3, includes SVS (2) (3) (4)	T	2.0 V	1.18		1.45		6.28		13.17		µA
$I_{LPM3,VLO}$	Low-power mode 3, VLO, excludes SVS (5)	T	3.0 V	1.01		1.29		6.15	21.65	13.1	47.67	µA
$I_{LPM3,VLO}$	Low-power mode 3, VLO, excludes SVS (5)	T	2.0 V	0.99		1.26		6.09		12.98		µA
$I_{LPM3,\ RTC}$	Low-power mode 3, RTC, excludes SVS (6)	T	3.0 V	1.15		1.43		6.29		13.24		µA
$I_{LPM3,\ RTC}$	Low-power mode 3, RTC, excludes SVS (6)	T	2.0 V	1.13		1.41		6.23		13.13		µA
$I_{LPM4,\ SVS}$	Low-power mode 4, includes SVS	T	3.0 V	0.74		1.00		5.83		12.73		µA
$I_{LPM4,\ SVS}$	Low-power mode 4, includes SVS	T	2.0 V	0.72		0.98		5.77		12.62		µA
$I_{LPM4,}$	Low-power mode 4, excludes SVS	T	3.0 V	0.56		0.82		5.64		12.54		µA
$I_{LPM4,}$	Low-power mode 4, excludes SVS	T	2.0 V	0.55		0.81		5.59		12.45		µA
$I_{LPM4,\ RTC,\ VLO}$	Low-power mode 4, RTC is sourced from VLO, excludes SVS (7)	T	3.0 V	0.66		0.93		5.76		12.67		µA
$I_{LPM4,\ RTC,\ VLO}$	Low-power mode 4, RTC is sourced from VLO, excludes SVS (7)	T	2.0 V	0.66		0.92		5.71		12.58		µA
$I_{LPM4,\ RTC,\ XT1}$	Low-power mode 4, RTC is sourced from XT1, excludes SVS (8)	T	3.0 V	1.06		1.34		6.21		13.15		µA
$I_{LPM4,\ RTC,\ XT1}$	Low-power mode 4, RTC is sourced from XT1, excludes SVS (8)	T	2.0 V	1.05		1.33		6.16		13.05		µA

(1) All inputs are tied to 0 V or to V_{CC}. Outputs do not source or sink any current
(2) Not applicable for devices with HF crystal oscillator only.
(3) Characterized with a Seiko Crystal SC-32S crystal with a load capacitance chosen to closely match the required load.
(4) Low-power mode 3, includes SVS test conditions:
Current for watchdog timer clocked by ACLK and RTC clocked by XT1 included. Current for brownout and SVS included (SVSHE = 1).
CPUOFF = 1, SCG0 = 1 SCG1 = 1, OSCOFF = 0 (LPM3),
f_{XT1} = 32768 Hz, $f_{ACLK} = f_{XT1}$, $f_{MCLK} = f_{SMCLK}$ = 0 MHz
(5) Low-power mode 3, VLO, excludes SVS test conditions:
Current for watchdog timer clocked by VLO included. RTC disabled. Current for brownout included. SVS disabled (SVSHE = 0).
CPUOFF = 1, SCG0 = 1 SCG1 = 1, OSCOFF = 0 (LPM3),
f_{XT1} = 32768 Hz, $f_{ACLK} = f_{MCLK} = f_{SMCLK}$ = 0 MHz
(6) RTC wakes every second with external 32768-Hz clock as source.
(7) Low-power mode 4, VLO, excludes SVS test conditions:
Current for RTC clocked by VLO included. RTC disabled. Current for brownout included. SVS disabled (SVSHE = 0).
CPUOFF = 1, SCG0 = 1 SCG1 = 1, OSCOFF = 1 (LPM4),
f_{XT1} = 32768 Hz, $f_{ACLK} = f_{MCLK} = f_{SMCLK}$ = 0 MHz
(8) Low-power mode 4, XT1, excludes SVS test conditions:
Current for RTC clocked by XT1 included. RTC disabled. Current for brownout included. SVS disabled (SVSHE = 0).
CPUOFF = 1, SCG0 = 1 SCG1 = 1, OSCOFF = 1 (LPM4),
f_{XT1} = 32768 Hz, $f_{ACLK} = f_{MCLK} = f_{SMCLK}$ = 0 MHz

版权 © 2018–2019, Texas Instruments Incorporated

5.8 Low-Power Mode LPMx.5 Supply Currents (Into V_{CC}) Excluding External Current

over recommended ranges of supply voltage and operating free-air temperature (unless otherwise noted)

PARAMETER		DEVICE GRADE	V_{CC}	–40°C		25°C		85°C		105°C		UNIT
				TYP	MAX	TYP	MAX	TYP	MAX	TYP	MAX	
$I_{LPM3.5,\ XT1}$	Low-power mode 3.5, includes SVS(1) (2) (3) (also see 图 5-3)	T	3.0 V	0.57		0.62		0.89	2.06	1.27	3.21	µA
$I_{LPM3.5,\ XT1}$	Low-power mode 3.5, includes SVS(1) (2) (3) (also see 图 5-3)	T	2.0 V	0.55		0.59		0.84		1.19		µA
$I_{LPM4.5,\ SVS}$	Low-power mode 4.5, includes SVS(4)	T	3.0 V	0.27		0.29		0.41	0.63	0.61	1.13	µA
$I_{LPM4.5,\ SVS}$	Low-power mode 4.5, includes SVS(4)	T	2.0 V	0.25		0.27		0.37		0.55		µA
$I_{LPM4.5}$	Low-power mode 4.5, excludes SVS(5)	T	3.0 V	0.031		0.042		0.153	0.343	0.337	0.832	µA
$I_{LPM4.5}$	Low-power mode 4.5, excludes SVS(5)	T	2.0 V	0.025		0.036		0.128		0.289		µA

(1) Not applicable for devices with HF crystal oscillator only
(2) Characterized with a Seiko Crystal SC-32S crystal with a load capacitance chosen to closely match the required load.
(3) Low-power mode 3.5, includes SVS test conditions:
Current for RTC clocked by XT1 included. Current for brownout and SVS included (SVSHE = 1). Core regulator disabled.
PMMREGOFF = 1, CPUOFF = 1, SCG0 = 1 SCG1 = 1, OSCOFF = 1 (LPMx.5),
f_{XT1} = 32768 Hz, $f_{ACLK} = f_{XT1}$, $f_{MCLK} = f_{SMCLK}$ = 0 MHz
(4) Low-power mode 4.5, includes SVS test conditions:
Current for brownout and SVS included (SVSHE = 1). Core regulator disabled.
PMMREGOFF = 1, CPUOFF = 1, SCG0 = 1 SCG1 = 1, OSCOFF = 1 (LPMx.5),
f_{XT1} = 0 Hz, $f_{ACLK} = f_{MCLK} = f_{SMCLK}$ = 0 MHz
(5) Low-power mode 4.5, excludes SVS test conditions:
Current for brownout included. SVS disabled (SVSHE = 0). Core regulator disabled.
PMMREGOFF = 1, CPUOFF = 1, SCG0 = 1 SCG1 = 1, OSCOFF = 1 (LPMx.5),
f_{XT1} = 0 Hz, $f_{ACLK} = f_{MCLK} = f_{SMCLK}$ = 0 MHz

版权 © 2018–2019, Texas Instruments Incorporated

5.9 Production Distribution of LPM Supply Currents

V_{CC} = 3 V

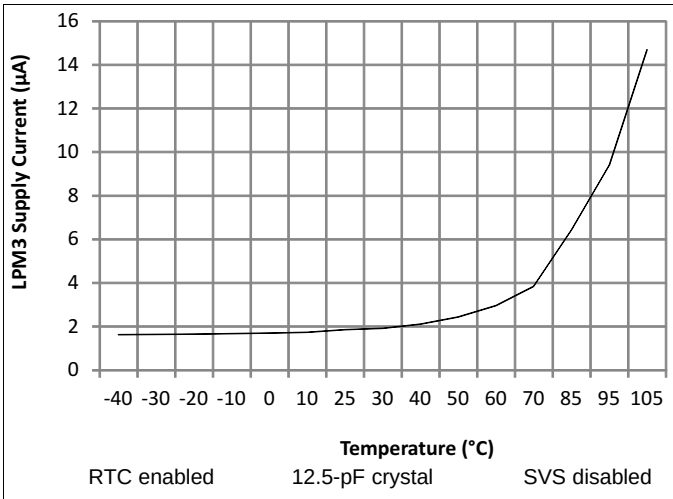

RTC enabled 12.5-pF crystal SVS disabled

图 5-1. Population vs Low-Power Mode 3 Supply Current

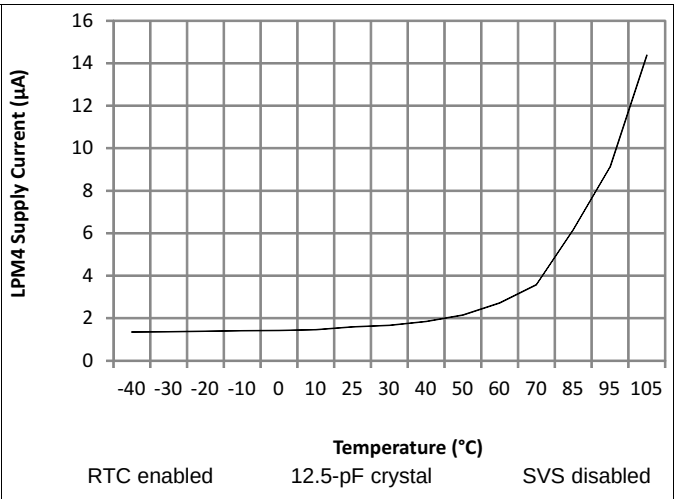

RTC enabled 12.5-pF crystal SVS disabled

图 5-2. Population vs Low-Power Mode 4 Supply Current

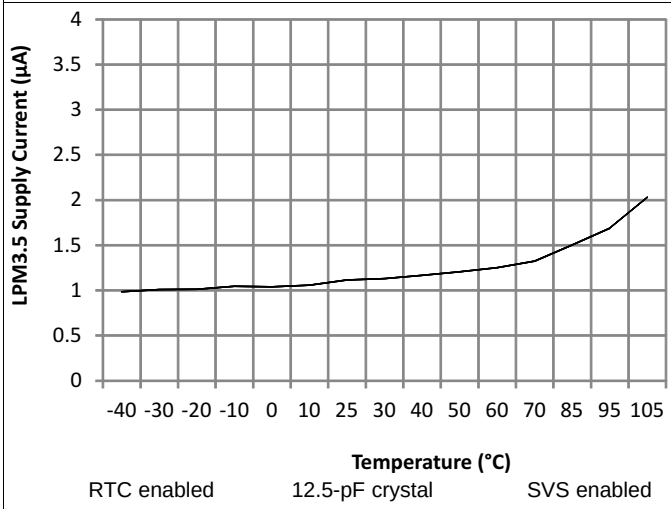

RTC enabled 12.5-pF crystal SVS enabled

图 5-3. LPM3.5 Supply Current vs Temperature

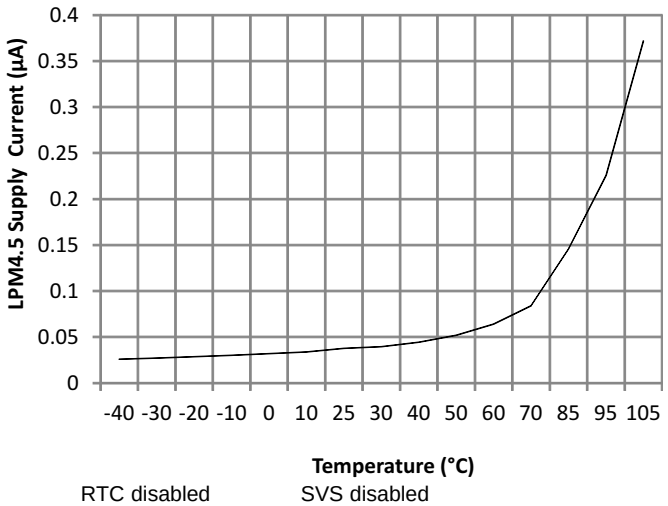

RTC disabled SVS disabled

图 5-4. LPM4.5 Supply Current vs Temperature

5.10 Typical Characteristics - Current Consumption Per Module

over recommended ranges of supply voltage and operating free-air temperature (unless otherwise noted)

MODULE	TEST CONDITIONS	REFERENCE CLOCK	DEVICE GRADE	TYP	UNIT
Timer_B		Module input clock	T	5	µA/MHz
eUSCI_A	UART mode	Module input clock	T	7	µA/MHz
eUSCI_A	SPI mode	Module input clock	T	5	µA/MHz
eUSCI_B	SPI mode	Module input clock	T	5	µA/MHz
eUSCI_B	I^2C mode, 100 kbaud	Module input clock	T	5	µA/MHz
RTC		32 kHz	T	85	nA
CRC	From start to end of operation	MCLK	T	8.5	µA/MHz

5.11 Thermal Resistance Characteristics

THERMAL METRIC(1)			VALUE(2)	UNIT
$R\theta_{JA}$	Junction-to-ambient thermal resistance, still air	QFP 48 pin (PT)	67.6	°C/W
		QFN 40 pin (RHA)	31.6	
		TSSOP 38 pin (DBT)	67.0	
		QFN 32 pin (RSM)	32.3	
$R\theta_{JC}$	Junction-to-case (top) thermal resistance	QFP 48 pin (PT)	24.0	°C/W
		QFN 40 pin (RHA)	24.1	
		TSSOP 38 pin (DBT)	19.8	
		QFN 32 pin (RSM)	27.8	
$R\theta_{JB}$	Junction-to-board thermal resistance	QFP 48 pin (PT)	31.6	°C/W
		QFN 40 pin (RHA)	12.6	
		TSSOP 38 pin (DBT)	27.3	
		QFN 32 pin (RSM)	11.8	

(1) For more information about traditional and new thermal metrics, see *Semiconductor and IC Package Thermal Metrics*.
(2) These values are based on a JEDEC-defined 2S2P system (with the exception of the Theta JC ($R\theta_{JC}$) value, which is based on a JEDEC-defined 1S0P system) and will change based on environment and application. For more information, see these EIA/JEDEC standards:
- JESD51-2, *Integrated Circuits Thermal Test Method Environmental Conditions - Natural Convection (Still Air)*
- JESD51-3, *Low Effective Thermal Conductivity Test Board for Leaded Surface Mount Packages*
- JESD51-7, *High Effective Thermal Conductivity Test Board for Leaded Surface Mount Packages*
- JESD51-9, *Test Boards for Area Array Surface Mount Package Thermal Measurements*

版权 © 2018–2019, Texas Instruments Incorporated

5.12 Timing and Switching Characteristics

5.12.1 Power Supply Sequencing

图 5-5 shows the power cycle and reset conditions.

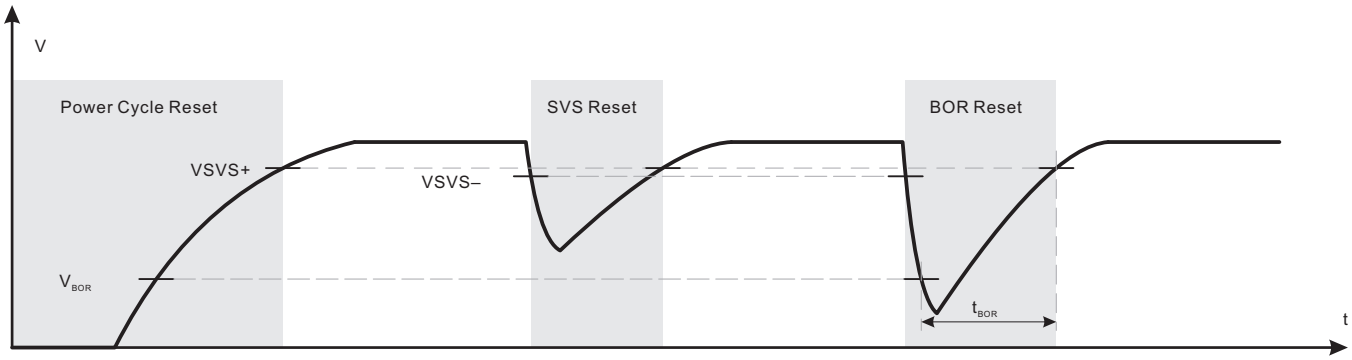

图 5-5. Power Cycle, SVS, and BOR Reset Conditions

表 5-1 lists the characteristics of the SVS and BOR.

表 5-1. PMM, SVS and BOR

over recommended ranges of supply voltage and operating free-air temperature (unless otherwise noted)

PARAMETER		TEST CONDITIONS	DEVICE GRADE	MIN	TYP	MAX	UNIT
$V_{BOR, safe}$	Safe BOR power-down level(1)		T	0.1			V
$t_{BOR, safe}$	Safe BOR reset delay(2)		T	10			ms
$I_{SVSH,AM}$	SVS_H current consumption, active mode	V_{CC} = 3.6 V	T			1.5	µA
$I_{SVSH,LPM}$	SVS_H current consumption, low-power modes	V_{CC} = 3.6 V	T		240		nA
V_{SVSH-}	SVS_H power-down level(3)		T	1.71	1.80	1.87	V
V_{SVSH+}	SVS_H power-up level(3)		T	1.76	1.88	1.99	V
V_{SVSH_hys}	SVS_H hysteresis		T		100		mV
$t_{PD,SVSH, AM}$	SVS_H propagation delay, active mode		T			10	µs
$t_{PD,SVSH, LPM}$	SVS_H propagation delay, low-power modes		T			100	µs

(1) A safe BOR can only be correctly generated only if DVCC must drop below this voltage before it rises.
(2) When an BOR occurs, a safe BOR can only be correctly generated only if DVCC is kept low longer than this period before it reaches V_{SVSH+}.
(3) For additional information, see the Dynamic Voltage Scaling Power Solution for MSP430 Devices With Single-Channel LDO Reference Design.

5.12.2 Reset Timing

表 5-2 lists the device wake-up times.

表 5-2. Wake-up Times From Low-Power Modes and Reset

over recommended ranges of supply voltage and operating free-air temperature (unless otherwise noted)

PARAMETER		TEST CONDITIONS	DEVICE GRADE	V_{CC}	MIN	TYP	MAX	UNIT
$t_{WAKE-UP\ FRAM}$	(Additional) wake-up time to activate the FRAM in AM if previously disabled through the FRAM controller or from a LPM if immediate activation is selected for wake-up (1)		T	3 V		10		µs
$t_{WAKE-UP\ LPM0}$	Wake-up time from LPM0 to active mode (1)		T	3 V			200 ns + 2.5 / f_{DCO}	
$t_{WAKE-UP\ LPM3}$	Wake-up time from LPM3 to active mode (1)		T	3 V		10		µs
$t_{WAKE-UP\ LPM4}$	Wake-up time from LPM4 to active mode (2)		T	3 V		10		µs
$t_{WAKE-UP\ LPM3.5}$	Wake-up time from LPM3.5 to active mode (2)		T	3 V		350		µs
$t_{WAKE-UP\ LPM4.5}$	Wake-up time from LPM4.5 to active mode (2)	SVSHE = 1	T	3 V		350		µs
		SVSHE = 0	T	3 V		1		ms
$t_{WAKE-UP-RESET}$	Wake-up time from $\overline{RST}$ or BOR event to active mode (2)		T	3 V		1		ms
t_{RESET}	Pulse duration required at $\overline{RST}$/NMI pin to accept a reset		T		2			µs

(1) The wake-up time is measured from the edge of an external wake-up signal (for example, port interrupt or wake-up event) to the first externally observable MCLK clock edge.
(2) The wake-up time is measured from the edge of an external wake-up signal (for example, port interrupt or wake-up event) until the first instruction of the user program is executed.

版权 © 2018–2019, Texas Instruments Incorporated

5.12.3 Clock Specifications

表 5-3 lists the characteristics of XT1 in low-frequency mode.

表 5-3. XT1 Crystal Oscillator (Low Frequency)

over recommended ranges of supply voltage and operating free-air temperature (unless otherwise noted)(1)(2)

PARAMETER		TEST CONDITIONS	DEVICE GRADE	MIN	TYP	MAX	UNIT
$f_{XT1,\ LF}$	XT1 oscillator crystal, low frequency	LFXTBYPASS = 0	T		32768		Hz
$DC_{XT1,\ LF}$	XT1 oscillator LF duty cycle	Measured at MCLK, f_{LFXT} = 32768 Hz	T	30%		70%	
$f_{XT1,SW}$	XT1 oscillator logic-level square-wave input frequency	LFXTBYPASS = 1(3)(4)	T		32768		Hz
$DC_{XT1,SW}$	LFXT oscillator logic-level square-wave input duty cycle	LFXTBYPASS = 1	T	40%		60%	
OA_{LFXT}	Oscillation allowance for LF crystals(5)	LFXTBYPASS = 0, LFXTDRIVE = {3}, f_{LFXT} = 32768 Hz, $C_{L,eff}$ = 12.5 pF	T		200		kΩ
$C_{L,eff}$	Integrated effective load capacitance(6)	(7)	T		1		pF
$t_{START,LFXT}$	Start-up time(8)	f_{OSC} = 32768 Hz, LFXTBYPASS = 0, LFXTDRIVE = {3}, T_A = 25°C, $C_{L,eff}$ = 12.5 pF	T		1000		ms
$f_{Fault,LFXT}$	Oscillator fault frequency(9)	XTS = 0(10)	T	0		3500	Hz

(1) To improve EMI on the LFXT oscillator, observe the following guidelines.
- Keep the trace between the device and the crystal as short as possible.
- Design a good ground plane around the oscillator pins.
- Prevent crosstalk from other clock or data lines into oscillator pins XIN and XOUT.
- Avoid running PCB traces underneath or adjacent to the XIN and XOUT pins.
- Use assembly materials and processes that avoid any parasitic load on the oscillator XIN and XOUT pins.
- If conformal coating is used, make sure that it does not induce capacitive or resistive leakage between the oscillator pins.

(2) See MSP430 32-kHz Crystal Oscillators for details on crystal section, layout, and testing.
(3) When LFXTBYPASS is set, LFXT circuits are automatically powered down. Input signal is a digital square wave with parametrics defined in the Schmitt-trigger inputs section of this data sheet. Duty cycle requirements are defined by $DC_{LFXT,SW}$.
(4) Maximum frequency of operation of the entire device cannot be exceeded.
(5) Oscillation allowance is based on a safety factor of 5 for recommended crystals. The oscillation allowance is a function of the LFXTDRIVE settings and the effective load. In general, comparable oscillator allowance can be achieved based on the following guidelines, but should be evaluated based on the actual crystal selected for the application:
- For LFXTDRIVE = {0}, $C_{L,eff}$ = 3.7 pF
- For LFXTDRIVE = {1}, 6 pF ≤ $C_{L,eff}$ ≤ 9 pF
- For LFXTDRIVE = {2}, 6 pF ≤ $C_{L,eff}$ ≤ 10 pF
- For LFXTDRIVE = {3}, 6 pF ≤ $C_{L,eff}$ ≤ 12 pF

(6) Includes parasitic bond and package capacitance (approximately 2 pF per pin).
(7) Requires external capacitors at both terminals to meet the effective load capacitance specified by crystal manufacturers. Recommended effective load capacitance values supported are 3.7 pF, 6 pF, 9 pF, and 12.5 pF. Maximum shunt capacitance of 1.6 pF. The PCB adds additional capacitance, so it must also be considered in the overall capacitance. Verify that the recommended effective load capacitance of the selected crystal is met.
(8) Includes startup counter of 1024 clock cycles.
(9) Frequencies above the MAX specification do not set the fault flag. Frequencies between the MIN and MAX specifications might set the flag. A static condition or stuck at fault condition sets the flag.
(10) Measured with logic-level input frequency but also applies to operation with crystals.

版权 © 2018–2019, Texas Instruments Incorporated

表 5-4 lists the characteristics of XT1 in high-frequency mode.

表 5-4. XT1 Crystal Oscillator (High Frequency)

over recommended ranges of supply voltage and operating free-air temperature (unless otherwise noted)(1)

PARAMETER		TEST CONDITIONS	DEVICE GRADE	MIN	TYP	MAX	UNIT
f_{HFXT}	HFXT oscillator crystal frequency, crystal mode	XT1BYPASS = 0, XTS = 1, XT1HFFREQ = 00	T	1		4	MHz
		XT1BYPASS = 0, XTS = 1, XT1HFFREQ = 01	T	4.01		6	
		XT1BYPASS = 0, XTS = 1, XT1HFFREQ = 10	T	6.01		16	
		XT1BYPASS = 0, XTS = 1, XT1HFFREQ = 11	T	16.01		24	
$f_{HFXT,SW}$	HFXT oscillator logic-level square-wave input frequency, bypass mode	XT1BYPASS = 1, XTS = 1 (2) (3)	T	1		24	MHz
DC_{HFXT}	HFXT oscillator duty cycle.	Measured at ACLK, $f_{HFXT,HF}$ = 4 MHz(4)	T	40%		60%	
$DC_{HFXT,SW}$	HFXT oscillator logic-level square-wave input duty cycle	XT1BYPASS = 1	T	40%		60%	
OA_{HFXT}	Oscillation allowance for HFXT crystals(5)	XT1BYPASS = 0, XT1HFSEL = 1 $f_{HFXT,HF}$ = 24 MHz, $C_{L,eff}$ = 18 pF	T		3.1		Ω
$t_{START,HFXT}$	Start-up time(6)	f_{OSC} = 4 MHz, XTS = 1(4) XT1BYPASS = 0, XT1HFFREQ = 00, XT1DRIVE = 3, T_A = 25°C, $C_{L,eff}$ = 18 pF	T		1.6		ms
		f_{OSC} = 24 MHz, XTS = 1(4) XT1BYPASS = 0, XT1HFFREQ = 00, XT1DRIVE = 3, T_A = 25°C, $C_{L,eff}$ = 18 pF	T		1.1		
$C_{L,eff}$	Integrated effective load capacitance(7) (8)		T		1		pF
$f_{Fault,HFXT}$	Oscillator fault frequency(9) (10)		T	0		800	kHz

(1) To improve EMI on the HFXT oscillator, observe the following guidelines.
- Keep the trace between the device and the crystal as short as possible.
- Design a good ground plane around the oscillator pins.
- Prevent crosstalk from other clock or data lines into oscillator pins XIN and XOUT.
- Avoid running PCB traces underneath or adjacent to the XIN and XOUT pins.
- Use assembly materials and processes that avoid any parasitic load on the oscillator XIN and XOUT pins.
- If conformal coating is used, make sure that it does not induce capacitive or resistive leakage between the oscillator pins.

(2) When XT1BYPASS is set, HFXT circuits are automatically powered down. Input signal is a digital square wave with parametrics defined in the Schmitt-trigger Inputs section of this datasheet. Duty cycle requirements are defined by $DC_{HFXT,SW}$.
(3) Maximum frequency of operation of the entire device cannot be exceeded.
(4) The 4-MHz crystal used for lab characterization is the Abracon HC49/U AB-4.000MHZ-B2. The 16-MHz crystal used for lab characterization is the Abracon HC49/U AB-16.000MHZ-B2.
(5) Oscillation allowance is based on a safety factor of 5 for recommended crystals.
(6) Includes startup counter of 4096 clock cycles.
(7) Includes parasitic bond and package capacitance (approximately 2 pF per pin).
Because the PCB adds additional capacitance, TI recommends verifying the correct load by measuring the oscillator frequency through MCLK or SMCLK. For a correct setup, the effective load capacitance should always match the specification of the used crystal.
(8) Requires external capacitors at both terminals. Values are specified by crystal manufacturers. Recommended values supported are 14 pF, 16 pF, and 18 pF. The maximum shunt capacitance is 7 pF.
(9) Frequencies above the MAX specification do not set the fault flag. Frequencies between the MIN and MAX specifications might set the flag. A static condition or stuck at fault condition sets the flag.
(10) Measured with logic-level input frequency but also applies to operation with crystals.

版权 © 2018–2019, Texas Instruments Incorporated

表 5-5 lists the frequency characteristics of the DCO FLL.

表 5-5. DCO FLL, Frequency

Over recommended operating free-air temperature (unless otherwise noted)

PARAMETER		TEST CONDITIONS	DEVICE GRADE	V_{CC}	MIN	TYP	MAX	UNIT
$f_{DCO, FLL}$	FLL lock frequency, 24 MHz, 25°C	Measured at MCLK, internal trimmed REFO as reference	T	3.0 V	–1.0%		1.0%	
$f_{DCO, FLL}$	FLL lock frequency, 24 MHz	Measured at MCLK, internal trimmed REFO as reference	T	3.0 V	–2.0%		2.0%	
$f_{DCO, FLL}$	FLL lock frequency, 24 MHz	Measured at MCLK, XT1 crystal as reference	T	3.0 V	–0.5%		0.5%	
f_{DUTY}	Duty cycle	Measured at MCLK, XT1 crystal as reference	T	3.0 V	40%	50%	60%	
$Jitter_{cc}$	Cycle-to-cycle jitter, 24 MHz	Measured at MCLK, XT1 crystal as reference	T	3.0 V		0.50%		
$Jitter_{long}$	Long-term Jitter, 24 MHz	Measured at MCLK, XT1 crystal as reference	T	3.0 V		0.022%		
$t_{FLL, lock}$	FLL lock time	Measured at MCLK, XT1 crystal as reference	T	3.0 V		200		ms

表 5-6 lists the frequency characteristics of the DCO.

表 5-6. DCO Frequency

Over recommended operating free-air temperature (unless otherwise noted)

PARAMETER		TEST CONDITIONS	DEVICE GRADE	V_{CC}	MIN	TYP	MAX	UNIT
$f_{DCO, 24MHz}$	DCO frequency 24 MHz	DCORSEL = 111b, DISMOD = 1b, DCOFTRIM = 000b, DCO = 0	T	3.0 V		12.6		MHz
		DCORSEL = 111b, DISMOD = 1b, DCOFTRIM = 000b, DCO = 511	T	3.0 V		20.5		
		DCORSEL = 111b, DISMOD = 1b, DCOFTRIM = 111b, DCO = 0	T	3.0 V		29.9		
		DCORSEL = 111b, DISMOD = 1b, DCOFTRIM = 111b, DCO = 511	T	3.0 V		48.2		
$f_{DCO, 20MHz}$	DCO frequency 20 MHz	DCORSEL = 110b, DISMOD = 1b, DCOFTRIM = 000b, DCO = 0	T	3.0 V		10.5		MHz
		DCORSEL = 110b, DISMOD = 1b, DCOFTRIM = 000b, DCO = 511	T	3.0 V		17.2		
		DCORSEL = 110b, DISMOD = 1b, DCOFTRIM = 111b, DCO = 0	T	3.0 V		25.1		
		DCORSEL = 110b, DISMOD = 1b, DCOFTRIM = 111b, DCO = 511	T	3.0 V		40.4		
$f_{DCO, 16MHz}$	DCO frequency 16 MHz	DCORSEL = 101b, DISMOD = 1b, DCOFTRIM = 000b, DCO = 0	T	3.0 V		8.3		MHz
		DCORSEL = 101b, DISMOD = 1b, DCOFTRIM = 000b, DCO = 511	T	3.0 V		13.6		
		DCORSEL = 101b, DISMOD = 1b, DCOFTRIM = 111b, DCO = 0	T	3.0 V		19.9		
		DCORSEL = 101b, DISMOD = 1b, DCOFTRIM = 111b, DCO = 511	T	3.0 V		32.2		

版权 © 2018–2019, Texas Instruments Incorporated

表 **5-6. DCO Frequency (continued)**

Over recommended operating free-air temperature (unless otherwise noted)

PARAMETER		TEST CONDITIONS	DEVICE GRADE	V_{CC}	MIN	TYP	MAX	UNIT
$f_{DCO, 12MHz}$	DCO frequency 12 MHz	DCORSEL = 100b, DISMOD = 1b, DCOFTRIM = 000b, DCO = 0	T	3.0 V		6.2		MHz
		DCORSEL = 100b, DISMOD = 1b, DCOFTRIM = 000b, DCO = 511	T	3.0 V		10.2		
		DCORSEL = 100b, DISMOD = 1b, DCOFTRIM = 111b, DCO = 0	T	3.0 V		15		
		DCORSEL = 100b, DISMOD = 1b, DCOFTRIM = 111b, DCO = 511	T	3.0 V		24.3		
$f_{DCO, 8MHz}$	DCO frequency 8 MHz	DCORSEL = 011b, DISMOD = 1b, DCOFTRIM = 000b, DCO = 0	T	3.0 V		4.2		MHz
		DCORSEL = 011b, DISMOD = 1b, DCOFTRIM = 000b, DCO = 511	T	3.0 V		6.9		
		DCORSEL = 011b, DISMOD = 1b, DCOFTRIM = 111b, DCO = 0	T	3.0 V		10		
		DCORSEL = 011b, DISMOD = 1b, DCOFTRIM = 111b, DCO = 511	T	3.0 V		16.4		
$f_{DCO, 4MHz}$	DCO frequency 4 MHz	DCORSEL = 010b,, DISMOD = 1b, DCOFTRIM = 000b, DCO = 0	T	3.0 V		2		MHz
		DCORSEL = 010b, DISMOD = 1b, DCOFTRIM = 000b, DCO = 511	T	3.0 V		3.4		
		DCORSEL = 010b, DISMOD = 1b, DCOFTRIM = 111b, DCO = 0	T	3.0 V		5		
		DCORSEL = 010b, DISMOD = 1b, DCOFTRIM = 111b, DCO = 511	T	3.0 V		8.2		
$f_{DCO, 2MHz}$	DCO frequency 2 MHz	DCORSEL = 001b, DISMOD = 1b, DCOFTRIM = 000b, DCO = 0	T	3.0 V		1		MHz
		DCORSEL = 001b, DISMOD = 1b, DCOFTRIM = 000b, DCO = 511	T	3.0 V		1.7		
		DCORSEL = 001b, DISMOD = 1b, DCOFTRIM = 111b, DCO = 0	T	3.0 V		2.5		
		DCORSEL = 001b, DISMOD = 1b, DCOFTRIM = 111b, DCO = 511	T	3.0 V		4.2		
$f_{DCO, 1MHz}$	DCO frequency 1 MHz	DCORSEL = 000b, DISMOD = 1b, DCOFTRIM = 000b, DCO = 0	T	3.0 V		0.5		MHz
		DCORSEL = 000b, DISMOD = 1b, DCOFTRIM = 000b, DCO = 511	T	3.0 V		0.85		
		DCORSEL = 000b, DISMOD = 1b, DCOFTRIM = 111b, DCO = 0	T	3.0 V		1.2		
		DCORSEL = 000b, DISMOD = 1b, DCOFTRIM = 111b, DCO = 511	T	3.0 V		2.1		

版权 © 2018–2019, Texas Instruments Incorporated

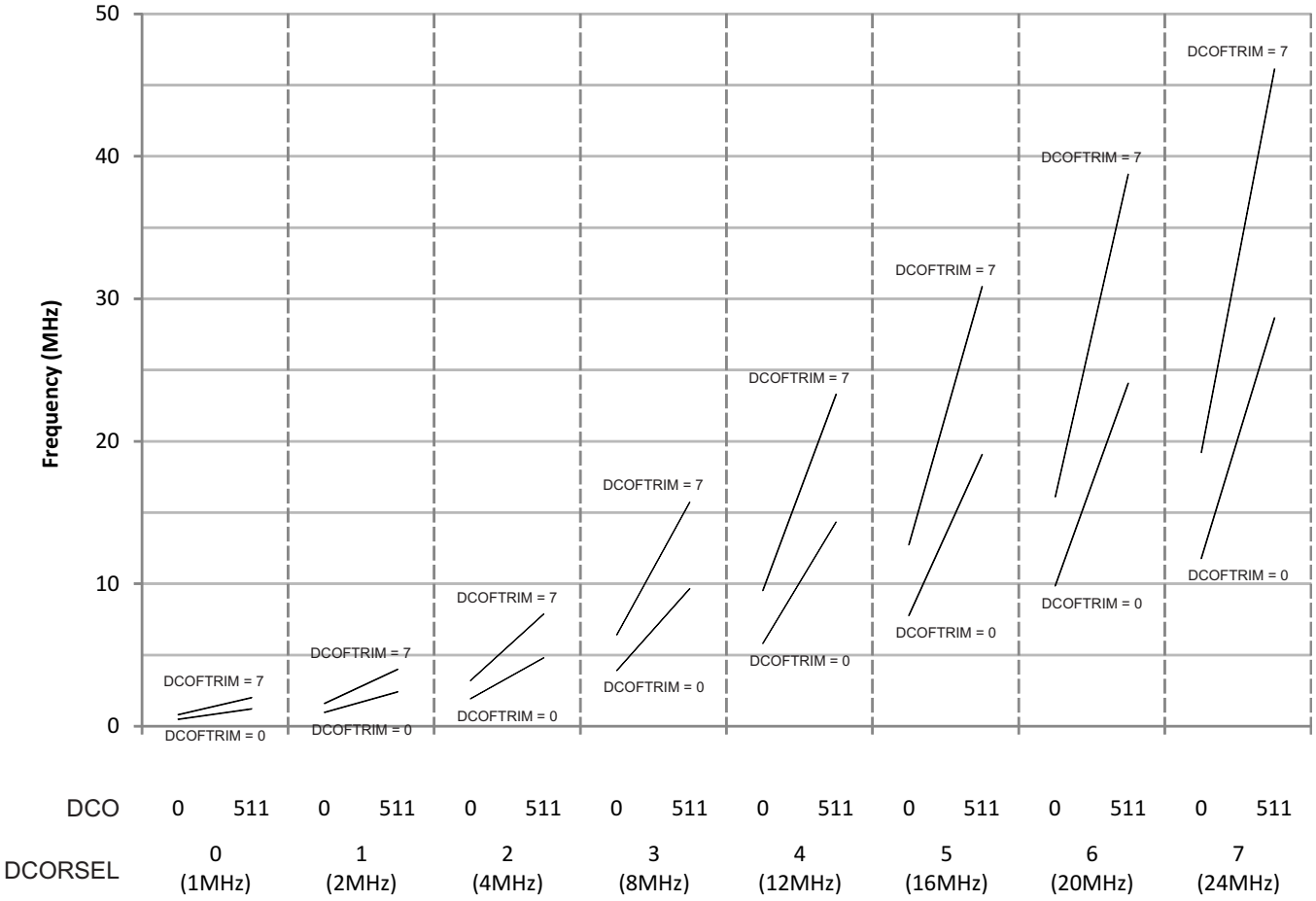

图 **5-6. Typical DCO Frequency**

表 5-7 lists the characteristics of the REFO.

表 5-7. REFO

over recommended operating free-air temperature (unless otherwise noted)

PARAMETER		TEST CONDITIONS	DEVICE GRADE	V_{CC}	MIN	TYP	MAX	UNIT
I_{REFO}	REFO oscillator current consumption	T_A = 25°C, HP mode (REFLP = 0)	T	3.0 V		15		µA
	REFO oscillator current consumption	T_A = 25°C, LP mode (REFLP = 1)	T	3.0 V		1		
f_{REFO}	REFO calibrated frequency	Measured at MCLK	T	3.0 V		32768		Hz
	REFO absolute calibrated tolerance	–40°C to 105°C	T	1.8 V to 3.6 V	–3.5%		+3.5%	
df_{REFO}/d_T	REFO frequency temperature drift	Measured at MCLK (1)	T	3.0 V		0.01		%/°C
df_{REFO}/d_{VCC}	REFO frequency supply voltage drift	Measured at MCLK at 25°C (2)	T	1.8 V to 3.6 V		1		%/V
f_{DC}	REFO duty cycle	Measured at MCLK	T	1.8 V to 3.6 V	40%	50%	60%	
t_{START}	REFO start-up time	40% to 60% duty cycle, HP mode (REFLP = 0)	T	3.0 V		72		µs
		40% to 60% duty cycle, LP mode (REFLP = 1)	T	3.0 V		75		

(1) Calculated using the box method: (MAX(–40°C to 105°C) – MIN(–40°C to 105°C)) / MIN(–40°C to 105°C) / (105°C – (–40°C))
(2) Calculated using the box method: (MAX(1.8 V to 3.6 V) – MIN(1.8 V to 3.6 V)) / MIN(1.8 V to 3.6 V) / (3.6 V – 1.8 V)

表 5-8 lists the characteristics of the VLO.

表 5-8. Internal Very-Low-Power Low-Frequency Oscillator (VLO)

over recommended ranges of supply voltage and operating free-air temperature (unless otherwise noted)

PARAMETER		TEST CONDITIONS	DEVICE GRADE	V_{CC}	MIN	TYP	MAX	UNIT
f_{VLO}	VLO frequency	Measured at MCLK	T	3.0 V		10		kHz
df_{VLO}/d_T	VLO frequency temperature drift	Measured at MCLK (1)	T	3.0 V		0.5		%/°C
df_{VLO}/dV_{CC}	VLO frequency supply voltage drift	Measured at MCLK (2)	T	1.8 V to 3.6 V		4		%/V
$f_{VLO,DC}$	Duty cycle	Measured at MCLK	T	3.0 V		50%		

(1) Calculated using the box method: (MAX(–40°C to 105°C) – MIN(–40°C to 105°C)) / MIN(–40°C to 105°C) / (105°C – (–40°C))
(2) Calculated using the box method: (MAX(1.8 V to 3.6 V) – MIN(1.8 V to 3.6 V)) / MIN(1.8 V to 3.6 V) / (3.6 V – 1.8 V)

注

The VLO clock frequency is reduced by 15% (typical) when the device switches from active mode to LPM3 or LPM4, because the reference changes. This lower frequency is not a violation of the VLO specifications (see 表 5-8).

版权 © 2018–2019, Texas Instruments Incorporated

表 5-9 lists the characteristics of the MODOSC.

表 5-9. Module Oscillator (MODOSC)

over recommended ranges of supply voltage and operating free-air temperature (unless otherwise noted)

PARAMETER		DEVICE GRADE	V_{CC}	MIN	TYP	MAX	UNIT
f_{MODOSC}	MODOSC frequency	T	3.0 V	3.0	3.8	4.6	MHz
f_{MODOSC}/dT	MODOSC frequency temperature drift(1)	T	3.0 V		0.102		%/℃
f_{MODOSC}/dV_{CC}	MODOSC frequency supply voltage drift	T	1.8 V to 3.6 V		1.17		%/V
$f_{MODOSC,DC}$	Duty cycle	T	3.0 V	40%	50%	60%	

(1) Calculated using the box method: (MAX(–40°C to 105°C) – MIN(–40°C to 105°C)) / MIN(–40°C to 105°C) / (105°C – (–40°C))

5.12.4 Internal Shared Reference

表 5-10 lists the characteristics of the internal shared reference.

表 5-10. Internal Shared Reference

over recommended ranges of supply voltage and operating free-air temperature (unless otherwise noted)

PARAMETER		TEST CONDITIONS	DEVICE GRADE	V_{CC}	MIN	TYP	MAX	UNIT
V_{SENSOR}	Temperature sensor voltage	T_J = 30℃	T	2.0 V, 3.0 V		788		mV
TC_{SENSOR}	Temperature sensor coefficient	T_J = 30℃	T			2.32		mV/°C
$V_{eCOMP, LP}$	Low-power threshold for eCOMP	T_J = 30℃	T	2.0 V, 3.0 V		1.20		V
$V_{REF+, Output}$	Positive output reference at VREF+ pin	T_J = 30℃	T	2.0 V, 3.0 V		1.20		V
The following parameters are for the 1.5-V, 2.0-V, and 2.5-V internal reference only and cannot be output to the VREF+ pin.								
$V_{REF+, built-in}$	Positive built-in reference voltage as internal reference	REFVSEL = {2} for 2.5 V, INTREFEN = 1	T	3.0 V		2.5	±1.5%	V
		REFVSEL = {1} for 2.0 V, INTREFEN = 1	T	2.5 V		2.0	±1.5%	
		REFVSEL = {0} for 1.5 V, INTREFEN = 1	T	1.8 V		1.5	±1.8%	
Noise	RMS noise at VREF (1)	From 0.1 Hz to 10 Hz, REFVSEL = {0}	T			30	130	µV
$V_{OS_BUF_INT}$	VREF ADC BUF_INT buffer offset(2)	T_A = 25 °C , ADC ON, REFVSEL = {0}, INTREFEN = 1, EXTREFEN=0	T		–16		+16	mV
$V_{OS_BUF_EXT}$	VREF ADC BUF_EXT buffer offset(3)	T_A = 25 °C, REFVSEL = {0} , EXTREFEN = 1, INTREFEN = 1 or ADC ON	T		–16		+16	mV
$DV_{CC(min)}$	DVCC minimum voltage, Positive built-in reference active	REFVSEL = {0} for 1.5 V	T		1.8			V
		REFVSEL = {1} for 2.0 V	T		2.2			
		REFVSEL = {2} for 2.5 V	T		2.7			
I_{REF+}	Operating supply current into DVCC terminal(4)	INTREFEN = 1	T	3 V		19	26	µA
$I_{REF+_ADC_BUF}$	Operating supply current into DVCC terminal(4)	ADC ON, EXTREFEN = 0, REFVSEL = {0, 1, 2}	T	3 V		247	400	µA

(1) Internal reference noise affects ADC performance when ADC uses internal reference.
(2) Buffer offset affects ADC gain error and thus total unadjusted error.
(3) Buffer offset affects ADC gain error and thus total unadjusted error.
(4) The internal reference current is supplied through the DVCC terminal.

版权 © 2018–2019, Texas Instruments Incorporated

表 **5-10. Internal Shared Reference (continued)**

over recommended ranges of supply voltage and operating free-air temperature (unless otherwise noted)

PARAMETER		TEST CONDITIONS	DEVICE GRADE	V_{CC}	MIN	TYP	MAX	UNIT
$I_{O(VREF+)}$	VREF maximum load current, VREF+ terminal	REFVSEL = {0, 1, 2}, $DV_{CC} = DV_{CC(min)}$ for each reference level, INTREFEN = EXTREFEN = 1	T	3 V	–1000		+10	µA
ΔVout/ ΔIo(VREF+)	Load-current regulation, VREF+ terminal	REFVSEL = {0, 1, 2}, $I_{O(VREF+)}$ = +10 µA or –1000 µA, $DV_{CC} = DV_{CC(min)}$ for each reference level, INTREFEN = EXTREFEN = 1	T	3 V			1500	µV/mA
$C_{VREF+/-}$	Capacitance at VREF+ and VREF- terminals	INTREFEN = EXTREFEN = 1	T	3 V	0		100	pF
TC_{REF+}	Temperature coefficient of built-in reference	REFVSEL = {0, 1, 2}, INTREFEN = EXTREFEN = 1, T_A = –40°C to 105°C (5)	T	3 V		24	50	ppm/K
PSRR_DC	Power supply rejection ratio (DC)	$DV_{CC} = DV_{CC\ (min)}$ to $DV_{CC(max)}$, T_A = 25°C, REFVSEL = {0, 1, 2}, INTREFEN = EXTREFEN = 1	T	3 V		100	400	µV/V
PSRR_AC	Power supply rejection ratio (ac)	dDV_{CC}= 0.1 V at 1 kHz	T	3 V		3.0		mV/V
t_{SETTLE}	Settling time of reference voltage (6)	$DV_{CC} = DV_{CC(min)}$ to $DV_{CC(max)}$, REFVSEL = {0, 1, 2}, INTREFEN = 0 → 1	T	3 V		75	100	µs

(5) Calculated using the box method: (MAX(–40°C to 105°C) – MIN(–40°C to 105°C)) / MIN(–40°C to 105°C) / (105°C – (–40°C))
(6) The condition is that the error in a conversion started after t_{REFON} is less than ±0.5 LSB.

版权 © 2018–2019, Texas Instruments Incorporated

5.12.5 General-Purpose I/Os

表 5-11 lists the characteristics of the digital inputs.

表 5-11. Digital Inputs

over recommended ranges of supply voltage and operating free-air temperature (unless otherwise noted)

PARAMETER		TEST CONDITIONS	DEVICE GRADE	V_{CC}	MIN	TYP	MAX	UNIT
V_{IT+}	Positive-going input threshold voltage		T	2.0 V	0.90		1.50	V
			T	3.0 V	1.35		2.25	
V_{IT-}	Negative-going input threshold voltage		T	2.0 V	0.50		1.10	V
			T	3.0 V	0.75		1.65	
V_{hys}	Input voltage hysteresis ($V_{IT+} - V_{IT-}$)		T	2.0 V	0.3		0.8	V
			T	3.0 V	0.4		1.2	
R_{Pull}	Pullup or pulldown resistor	For pullup: $V_{IN} = V_{SS}$, For pulldown: $V_{IN} = V_{CC}$	T		20	35	50	kΩ
$C_{I,dig}$	Input capacitance, digital only port pins	$V_{IN} = V_{SS}$ or V_{CC}	T			3		pF
$C_{I,ana}$	Input capacitance, port pins with shared analog functions	$V_{IN} = V_{SS}$ or V_{CC}	T			5		pF
$I_{lkg(Px.y)}$	High-impedance leakage current (1) (2)		T	2.0 V, 3.0 V	–30		+30	nA
$t_{(int)}$	External interrupt timing (external trigger pulse duration to set interrupt flag) (3)	Ports with interrupt capability (see block diagram and terminal function descriptions)	T	2.0 V, 3.0 V	50			ns

(1) The leakage current is measured with V_{SS} or V_{CC} applied to the corresponding pins, unless otherwise noted.
(2) The leakage of the digital port pins is measured individually. The port pin is selected for input and the pullup or pulldown resistor is disabled.
(3) An external signal sets the interrupt flag every time the minimum interrupt pulse duration $t_{(int)}$ is met. It can be set by trigger signals shorter than $t_{(int)}$.

表 5-12 lists the characteristics of the digital outputs.

表 5-12. Digital Outputs

over recommended ranges of supply voltage and operating free-air temperature (unless otherwise noted)

PARAMETER		TEST CONDITIONS	DEVICE GRADE	V_{CC}	MIN	TYP	MAX	UNIT
V_{OH}	High-level output voltage	$I_{(OHmax)}$ = –3 mA (1)	T	2.0 V	1.4		2.0	V
		$I_{(OHmax)}$ = –5 mA (1)	T	3.0 V	2.4		3.0	
V_{OL}	Low-level output voltage	$I_{(OLmax)}$ = 3 mA (1)	T	2.0 V	0.0		0.60	V
		$I_{(OLmax)}$ = 5 mA (1)	T	3.0 V	0.0		0.60	
f_{Port_CLK}	Clock output frequency	Applicable to all IO ports, C_L = 20 pF (2)	T	2.0 V	16			MHz
			T	3.0 V	16			
		IOs multiplexed with MCLK and SMCLK, C_L = 10 pF (2)	T	2.0 V	24			
			T	3.0 V	24			
$t_{rise,dig}$	Port output rise time, digital only port pins	C_L = 20 pF	T	2.0 V		10		ns
			T	3.0 V		7		
$t_{fall,dig}$	Port output fall time, digital only port pins	C_L = 20 pF	T	2.0 V		10		ns
			T	3.0 V		5		

(1) The maximum total current, $I_{(OHmax)}$ and $I_{(OLmax)}$, for all outputs combined should not exceed ±48 mA to hold the maximum voltage drop specified.
(2) The port can output frequencies at least up to the specified limit and might support higher frequencies.

版权 © 2018–2019, Texas Instruments Incorporated

5.12.6 Digital I/O Typical Characteristics

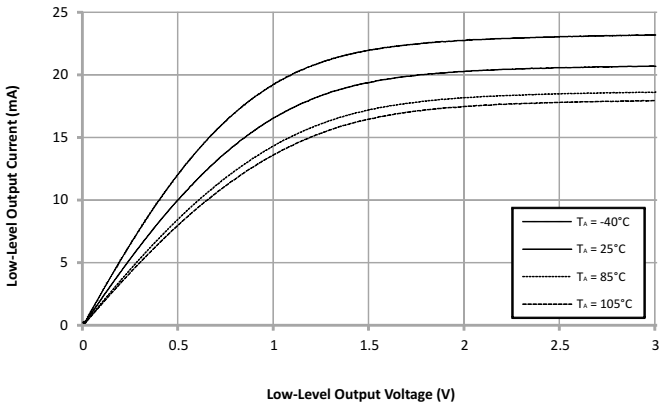

DVCC = 3 V

图 5-7. Typical Low-Level Output Current vs Low-Level Output Voltage

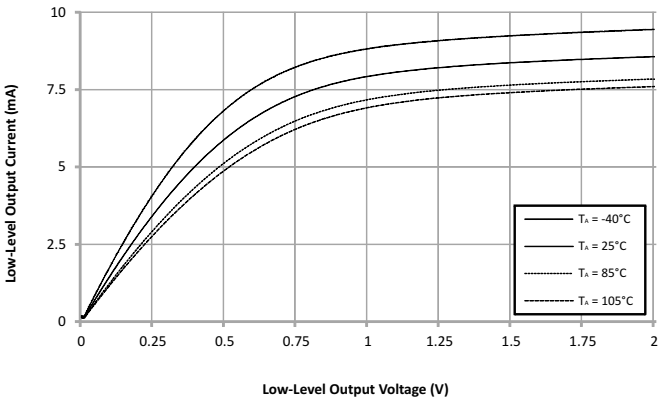

DVCC = 2 V

图 5-8. Typical Low-Level Output Current vs Low-Level Output Voltage

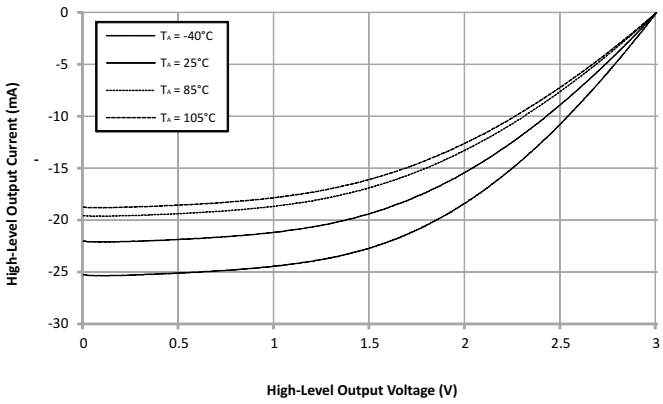

DVCC = 3 V

图 5-9. Typical High-Level Output Current vs High-Level Output Voltage

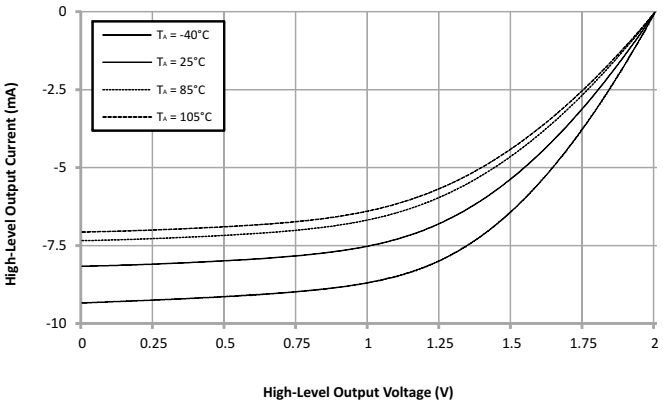

DVCC = 2 V

图 5-10. Typical High-Level Output Current vs High-Level Output Voltage

版权 © 2018–2019, Texas Instruments Incorporated

5.12.7 Timer_B

表 5-13 lists the frequency characteristics of Timer_B.

表 5-13. Timer_B

over recommended ranges of supply voltage and operating free-air temperature (unless otherwise noted)

PARAMETER		TEST CONDITIONS	DEVICE GRADE	V_{CC}	MIN	TYP	MAX	UNIT
f_{TB}	Timer_B input clock frequency	Internal: SMCLK or ACLK, External: TBCLK, Duty cycle = 50% ±10%	T	2.0 V, 3.0 V			24	MHz
$t_{TB,cap}$	Timer_B capture timing	All capture inputs, minimum pulse duration required for capture	T	2.0 V, 3.0 V	20			ns

5.12.8 eUSCI

表 5-14 lists the supported frequencies of the eUSCI in UART mode.

表 5-14. eUSCI (UART Mode) Clock Frequencies

over recommended ranges of supply voltage and operating free-air temperature (unless otherwise noted)

PARAMETER		TEST CONDITIONS	DEVICE GRADE	V_{CC}	MIN	TYP	MAX	UNIT
f_{eUSCI}	eUSCI input clock frequency	Internal: SMCLK or MODCLK, External: UCLK, Duty cycle = 50% ±10%	T	2.0 V, 3.0 V			24	MHz
f_{BITCLK}	BITCLK clock frequency (equals baud rate in Mbaud)		T	2.0 V, 3.0 V			5	MHz

表 5-15 lists the switching characteristics of the eUSCI in UART mode.

表 5-15. eUSCI (UART Mode) Switching Characteristics

over recommended ranges of supply voltage and operating free-air temperature (unless otherwise noted)

PARAMETER		TEST CONDITIONS	DEVICE GRADE	V_{CC}	MIN	TYP	MAX	UNIT
t_t	UART receive deglitch time (1)	UCGLITx = 0	T	2.0 V, 3.0 V		12		ns
		UCGLITx = 1				40		
		UCGLITx = 2				68		
		UCGLITx = 3				110		

(1) Pulses on the UART receive input (UCxRX) shorter than the UART receive deglitch time are suppressed. To make sure that pulses are correctly recognized their width should exceed the maximum specification of the deglitch time.

版权 © 2018–2019, Texas Instruments Incorporated

表 5-16 lists the supported frequencies of the eUSCI in SPI master mode.

表 5-16. eUSCI (SPI Master Mode) Clock Frequency

over recommended ranges of supply voltage and operating free-air temperature (unless otherwise noted)

PARAMETER		TEST CONDITIONS	DEVICE GRADE	V_{CC}	MIN	TYP	MAX	UNIT
f_{eUSCI}	eUSCI input clock frequency	Internal: SMCLK, Duty cycle = 50% ±10%	T				8	MHz

表 5-17 lists the switching characteristics of the eUSCI in SPI master mode.

表 5-17. eUSCI (SPI Master Mode) Switching Characteristics

over recommended ranges of supply voltage and operating free-air temperature (unless otherwise noted)(1)

PARAMETER		TEST CONDITIONS	DEVICE GRADE	V_{CC}	MIN	TYP	MAX	UNIT
$t_{STE,LEAD}$	STE lead time, STE active to clock	UCSTEM = 1, UCMODEx = 01 or 10	T		1			UCxCLK cycles
$t_{STE,LAG}$	STE lag time, Last clock to STE inactive	UCSTEM = 1, UCMODEx = 01 or 10	T		1			UCxCLK cycles
$t_{SU,MI}$	SOMI input data setup time		T	2.0 V	60			ns
				3.0 V	42			
$t_{HD,MI}$	SOMI input data hold time		T	2.0 V	0			ns
				3.0 V	0			
$t_{VALID,MO}$	SIMO output data valid time(2)	UCLK edge to SIMO valid, C_L = 20 pF	T	2.0 V			20	ns
				3.0 V			20	
$t_{HD,MO}$	SIMO output data hold time(3)	C_L = 20 pF	T	2.0 V	–9.0			ns
				3.0 V	–6.0			

(1) $f_{UCxCLK} = 1/2t_{LO/HI}$ with $t_{LO/HI} = \max(t_{VALID,MO(eUSCI)} + t_{SU,SI(Slave)}, t_{SU,MI(eUSCI)} + t_{VALID,SO(Slave)})$
For the slave parameters $t_{SU,SI(Slave)}$ and $t_{VALID,SO(Slave)}$, see the SPI parameters of the attached slave.

(2) Specifies the time to drive the next valid data to the SIMO output after the output changing UCLK clock edge. See the timing diagrams in 图 5-11 and 图 5-12.

(3) Specifies how long data on the SIMO output is valid after the output changing UCLK clock edge. Negative values indicate that the data on the SIMO output can become invalid before the output changing clock edge observed on UCLK. See the timing diagrams in 图 5-11 and 图 5-12.

版权 © 2018–2019, Texas Instruments Incorporated

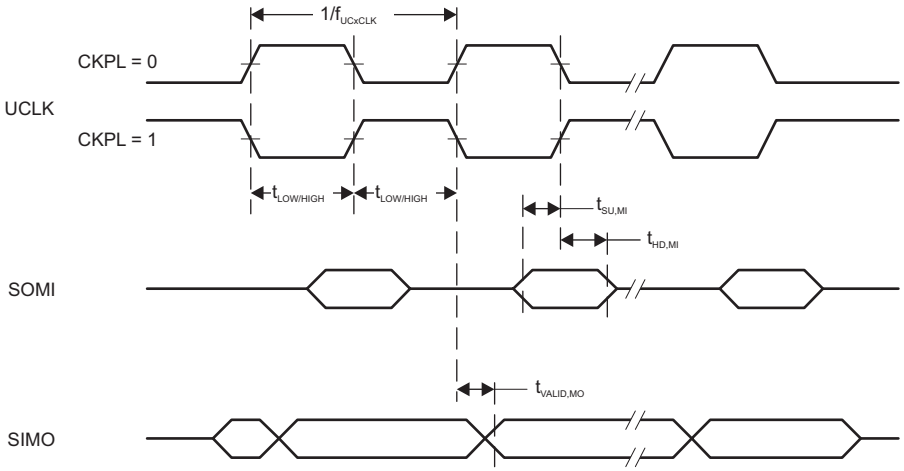

图 **5-11. SPI Master Mode, CKPH = 0**

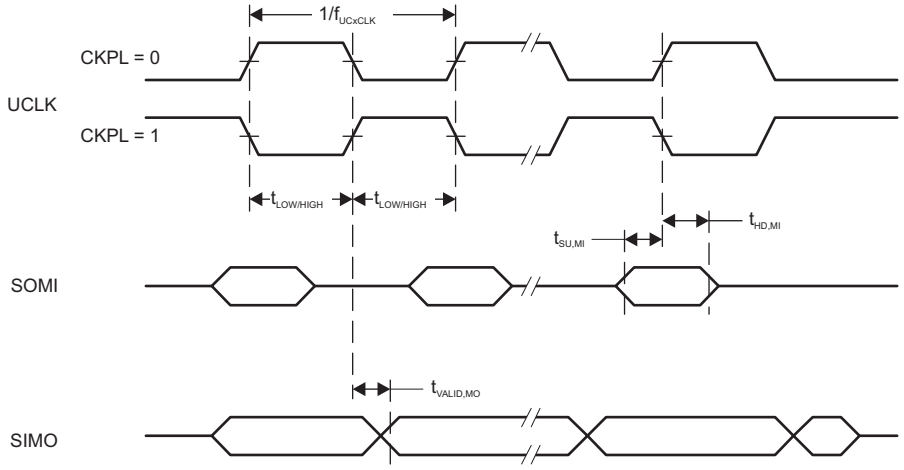

图 **5-12. SPI Master Mode, CKPH = 1**

表 5-18 lists the switching characteristics of the eUSCI in SPI slave mode.

表 5-18. eUSCI (SPI Slave Mode) Switching Characteristics

over recommended ranges of supply voltage and operating free-air temperature (unless otherwise noted)(1)

PARAMETER		TEST CONDITIONS	DEVICE GRADE	V_{CC}	MIN	TYP	MAX	UNIT
$t_{STE,LEAD}$	STE lead time, STE active to clock		T	2.0 V	55			ns
				3.0 V	45			
$t_{STE,LAG}$	STE lag time, last clock to STE inactive		T	2.0 V	20			ns
				3.0 V	20			
$t_{STE,ACC}$	STE access time, STE active to SOMI data out		T	2.0 V			65	ns
				3.0 V			40	
$t_{STE,DIS}$	STE disable time, STE inactive to SOMI high impedance		T	2.0 V			40	ns
				3.0 V			35	
$t_{SU,SI}$	SIMO input data setup time		T	2.0 V	10			ns
				3.0 V	6			
$t_{HD,SI}$	SIMO input data hold time		T	2.0 V	12			ns
				3.0 V	12			
$t_{VALID,SO}$	SOMI output data valid time(2)	UCLK edge to SOMI valid, C_L = 20 pF	T	2.0 V			69	ns
				3.0 V			42	
$t_{HD,SO}$	SOMI output data hold time (3)	C_L = 20 pF	T	2.0 V	5			ns
				3.0 V	5			

(1) $f_{UCxCLK} = 1/2t_{LO/HI}$ with $t_{LO/HI} \geq \max(t_{VALID,MO(Master)} + t_{SU,SI(eUSCI)}, t_{SU,MI(Master)} + t_{VALID,SO(eUSCI)})$
For the master parameters $t_{SU,MI(Master)}$ and $t_{VALID,MO(Master)}$, see the SPI parameters of the attached master.
(2) Specifies the time to drive the next valid data to the SOMI output after the output changing UCLK clock edge. See the timing diagrams in 图 5-13 and 图 5-14.
(3) Specifies how long data on the SOMI output is valid after the output changing UCLK clock edge. See the timing diagrams in 图 5-13 and 图 5-14.

版权 © 2018–2019, Texas Instruments Incorporated

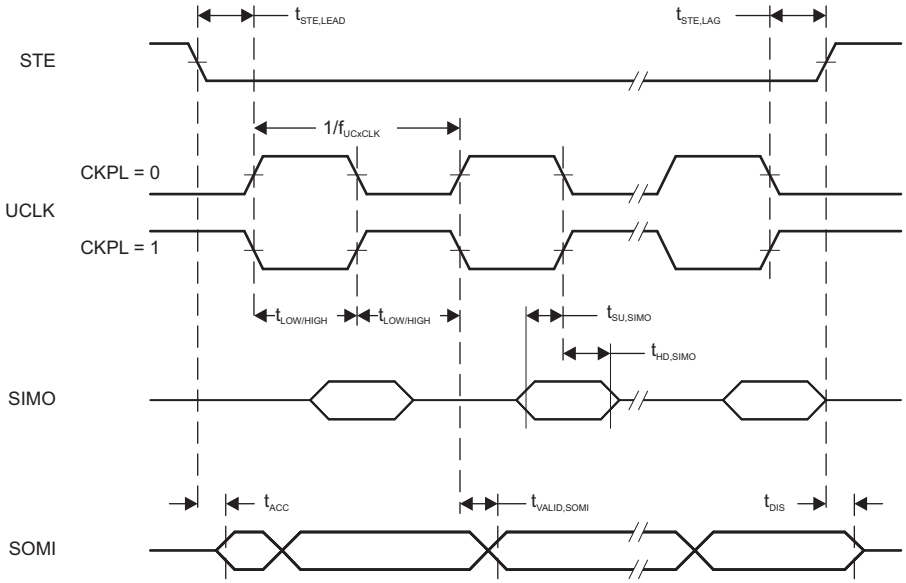

图 5-13. SPI Slave Mode, CKPH = 0

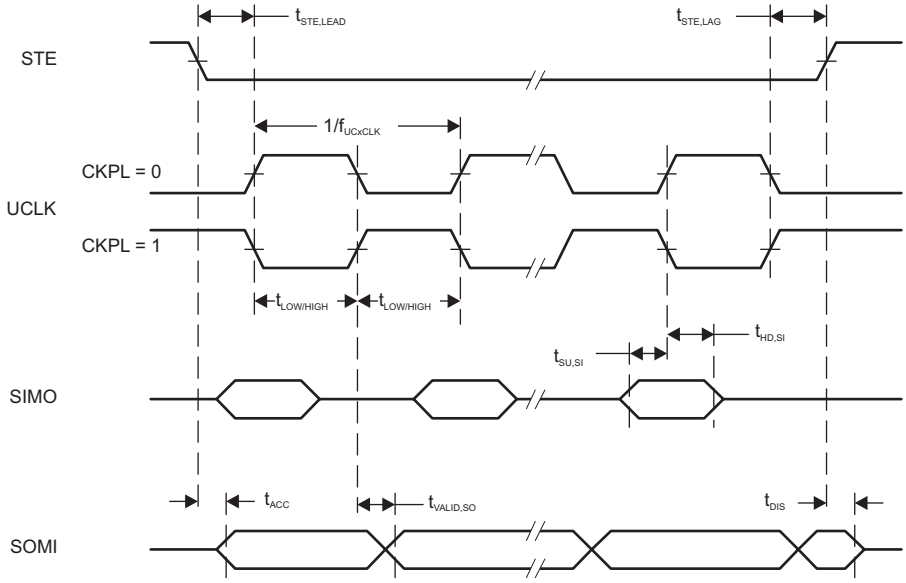

图 5-14. SPI Slave Mode, CKPH = 1

表 5-19 lists the switching characteristics of the eUSCI in I²C mode.

表 5-19. eUSCI (I²C Mode) Switching Characteristics

over recommended ranges of supply voltage and operating free-air temperature (unless otherwise noted) (see 图 5-15)

PARAMETER		TEST CONDITIONS	DEVICE GRADE	V_{CC}	MIN	TYP	MAX	UNIT
f_{eUSCI}	eUSCI input clock frequency	Internal: SMCLK or MODCLK, External: UCLK Duty cycle = 50% ±10%	T	2.0 V, 3.0 V			24	MHz
f_{SCL}	SCL clock frequency		T	2.0 V, 3.0 V	0		400	kHz
$t_{HD,STA}$	Hold time (repeated) START	f_{SCL} = 100 kHz	T	2.0 V, 3.0 V	4.0			µs
		f_{SCL} > 100 kHz			0.6			
$t_{SU,STA}$	Setup time for a repeated START	f_{SCL} = 100 kHz	T	2.0 V, 3.0 V	4.7			µs
		f_{SCL} > 100 kHz			0.6			
$t_{HD,DAT}$	Data hold time		T	2.0 V, 3.0 V	0			ns
$t_{SU,DAT}$	Data setup time		T	2.0 V, 3.0 V	250			ns
$t_{SU,STO}$	Setup time for STOP	f_{SCL} = 100 kHz	T	2.0 V, 3.0 V	4.0			µs
		f_{SCL} > 100 kHz			0.6			
t_{SP}	Pulse duration of spikes suppressed by input filter	UCGLITx = 0	T	2.0 V, 3.0 V	50		600	ns
		UCGLITx = 1			25		300	
		UCGLITx = 2			12.5		150	
		UCGLITx = 3			6.3		75	
$t_{TIMEOUT}$	Clock low time-out	UCCLTOx = 1	T	2.0 V, 3.0 V		36		ms
		UCCLTOx = 2				40		
		UCCLTOx = 3				44		

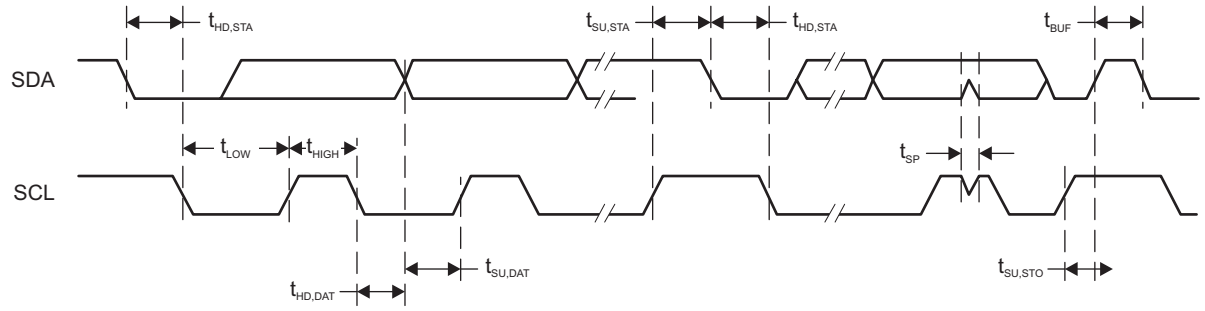

图 5-15. I²C Mode Timing

版权 © 2018–2019, Texas Instruments Incorporated

5.12.9 ADC

表 5-20 lists the input characteristics of the ADC.

表 5-20. ADC, Power Supply and Input Range Conditions

over operating free-air temperature range (unless otherwise noted)

PARAMETER		TEST CONDITIONS	DEVICE GRADE	V_{CC}	MIN	TYP	MAX	UNIT
DV_{CC}	ADC supply voltage(1)		T		2.0		3.6	V
$V_{(Ax)}$	Analog input voltage range	All ADC pins	T		0		DV_{CC}	V
I_{ADC}	Operating supply current into DVCC terminal, reference current not included, repeat-single-channel mode	f_{ADCCLK} = 5 MHz, ADCON = 1, REFON = 0, SHT0 = 0, SHT1 = 0, ADCDIV = 0, ADCCONSEQx = 10b	T	2.0 V		185		µA
				3.0 V		280		
C_I	Input capacitance	Only one terminal Ax can be selected at one time from the pad to the ADC capacitor array, including wiring and pad	T	2.2 V		4.5	5.5	pF
R_I	Input MUX ON resistance	DV_{CC} = 2 V, 0 V ≤ V_{Ax} ≤ DV_{CC}	T				2	kΩ

(1) This specifies the ADC functional range with 8-bit resolution at 8-bit ENOB. 表 5-22 specifies 10- and 12-bit linearity parameters for better ENOB requirements.

表 5-21 lists the timing parameters of the ADC.

表 5-21. ADC, Timing Parameters

over operating free-air temperature range (unless otherwise noted)

PARAMETER		TEST CONDITIONS	DEVICE GRADE	V_{CC}	MIN	TYP	MAX	UNIT
f_{ADCCLK}	ADC clock frequency	ADC clock, 10-bit mode	T	2.4 V to 3.6 V			6.0	MHz
		ADC clock, 12-bit mode					4.4	
$t_{Settling}$	Turn-on settling time of the ADC	The error in a conversion started after t_{ADCON} is less than ±0.5 LSB, Reference and input signal already settled	T				100	ns
t_{Sample}	Sampling time(1)	R_S = 1000 Ω, R_I = 4000 Ω, C_I = 5.5 pF, $C_{external}$ = 8.0 pF, Approximately 7.62 Tau (t) are required for an error of less than ±0.5 LSB, 10-bit mode(2)	T	2.4 V to 3.6 V	0.52			µs
		R_S = 1000 Ω, R_I = 4000 Ω, C_I = 5.5 pF, $C_{external}$ = 8.0 pF, Approximately 9.01 Tau (t) are required for an error of less than ±0.5 LSB, 12-bit mode(2)	T	2.4 V to 3.6 V	0.61			

(1) This excludes the ADC conversion time. The ADC conversion time is specified as (N + 2) × $1/f_{ADCCLK}$.
(2) $t_{Sample} = \ln(2^{n+1}) \times \tau$, where n = ADC resolution, $\tau = (R_I + R_S) \times C_I$

表 5-22 lists the linearity parameters of the ADC.

表 5-22. ADC, Linearity Parameters

over operating free-air temperature range (unless otherwise noted)

PARAMETER		TEST CONDITIONS	DEVICE GRADE	V_{CC}	MIN	TYP	MAX	UNIT
E_I	Integral linearity error(12-bit mode)	Veref+ reference	T	2.4 V to 3.6 V	–2.5		2.5	LSB
	Integral linearity error (10-bit mode)	Veref+ reference			–2		2	
E_D	Differential linearity error(12-bit mode)	Veref+ reference	T	2.4 V to 3.6 V	–1		1	LSB
	Differential linearity error (10-bit mode)	Veref+ reference			–1		1	
E_O	Offset error(12-bit mode)	Veref+ reference	T	2.4 V to 3.6 V	–1.5		1.5	mV
	Offset error (10-bit mode)	Veref+ reference			–6.0		6.0	
E_G	Gain error (12-bit mode)	Veref+ as reference	T	2.4 V to 3.6 V	–3.0		3.0	LSB
	Gain error (10-bit mode)	Veref+ as reference			–1.5		1.5	
E_T	Total unadjusted error (12-bit mode)	Veref+ as reference	T	2.4 V to 3.6 V	–4.0		4.0	LSB
	Total unadjusted error (10-bit mode)	Veref+ as reference			–2.0		2.0	

版权 © 2018–2019, Texas Instruments Incorporated

5.12.10 Enhanced Comparator (eCOMP)

表 5-23 lists the characteristics of eCOMP0.

表 5-23. eCOMP0

over recommended ranges of supply voltage and operating free-air temperature (unless otherwise noted)

PARAMETER		TEST CONDITIONS	DEVICE GRADE	MIN	TYP	MAX	UNIT
V_{CC}	Supply voltage		T	2.0		3.6	V
V_{IC}	Common mode input range		T	0		V_{CC}	V
V_{HYS}	DC input hysteresis	CPEN = 1, CPHSEL= 00	T		0		mV
		CPEN = 1, CPHSEL= 01			10		
		CPEN = 1, CPHSEL= 10			20		
		CPEN = 1, CPHSEL= 11			30		
V_{OFFSET}	Input offset voltage	CPEN = 1, CPMSEL = 0	T	–30		+30	mV
		CPEN = 1, CPMSEL = 1		–40		+40	
I_{COMP}	Quiescent current draw from V_{CC}, only Comparator	V_{IC} = V_{CC}/2, CPEN = 1, CPMSEL = 0	T		24	35	µA
		V_{IC} = V_{CC}/2, CPEN = 1, CPMSEL = 1			1.6	5	
C_{IN}	Input channel capacitance (1)		T		1		pF
R_{IN}	Input channel series resistance	On (switch closed)	T		10	20	kΩ
		Off (switch open)		50			MΩ
t_{PD}	Propagation delay, response time	CPMSEL = 0, CPFLT = 0, Overdrive = 20 mV	T			1	µs
		CPMSEL = 1, CPFLT = 0, Overdrive = 20 mV			3.2		
t_{EN_CP}	Comparator enable time	CPEN = 0→1, CPMSEL = 0, V+ and V- from pads, Overdrive = 20 mV	T		8.5		µs
		CPEN = 0→1, CPMSEL = 1, V+ and V- from pads, Overdrive = 20 mV			1.4		
$t_{EN_CP_DAC}$	Comparator with reference DAC enable time	CPEN = 0→1, CPDACEN = 0→1, CPMSEL = 0, CPDACREFS = 1, CPDACBUF1 = 0F, Overdrive = 20 mV	T		8.5		µs
		CPEN = 0→1, CPDACEN = 0→1, CPMSEL = 1, CPDACREFS = 1, CPDACBUF1 = 0F, Overdrive = 20 mV			101		
t_{FDLY}	Propagation delay with analog filter active	CPMSEL = 0, CPFLTDY = 00, Overdrive = 20 mV, CPFLT = 1	T		0.7		µs
		CPMSEL = 0, CPFLTDY = 01, Overdrive = 20 mV, CPFLT = 1			1.1		
		CPMSEL = 0, CPFLTDY = 10, Overdrive = 20 mV, CPFLT = 1			1.9		
		CPMSEL = 0, CPFLTDY = 11, Overdrive = 20 mV, CPFLT = 1			3.4		
INL	Integral nonlinearity		T	–0.5		0.5	LSB
DNL	Differential nonlinearity		T	–0.5		0.5	LSB

(1) For details on the eCOMP $C_{IN,}$ model , see 图 5-16.

表 5-24 lists the characteristics of eCOMP1.

表 5-24. eCOMP1

over recommended ranges of supply voltage and operating free-air temperature (unless otherwise noted)

PARAMETER		TEST CONDITIONS	DEVICE GRADE	MIN	TYP	MAX	UNIT
VCC	Supply voltage		T	2.0		3.6	V
V_{IC}	Common mode input range		T	0		V_{CC}	V
V_{HYS}	DC input hysteresis	CPEN = 1, CPHSEL= 00	T		0		mV
		CPEN = 1, CPHSEL= 01			10		
		CPEN = 1, CPHSEL= 10			20		
		CPEN = 1, CPHSEL= 11			30		
V_{OFFSET}	Input offset voltage	CPEN = 1, CPMSEL = 0	T	–30		+30	mV
		CPEN = 1, CPMSEL = 1		–40		+40	
I_{COMP}	Quiescent current draw from V_{CC}, only Comparator	V_{IC} = V_{CC}/2, CPEN = 1, CPMSEL = 0	T		162	209	µA
		V_{IC} = V_{CC}/2, CPEN = 1, CPMSEL = 1			20	30	
C_{IN}	Input channel capacitance(1)		T		1		pF
R_{IN}	Input channel series resistance	On (switch closed)	T		1	5	kΩ
		Off (switch open)		50			MΩ
t_{PD}	Propagation delay, response time	CPMSEL = 0, CPFLT = 0, Overdrive = 20 mV, DVCC = 3.0 V	T			0.1	µs
		CPMSEL = 1, CPFLT = 0, Overdrive = 20 mV			0.32		
t_{EN_CP}	Comparator enable time	CPEN = 0→1, CPMSEL = 0, V+ and V- from pads, Overdrive = 20 mV	T		8.5		µs
		CPEN = 0→1, CPMSEL = 1, V+ and V- from pads, Overdrive = 20 mV			4.8		
$t_{EN_CP_DAC}$	Comparator with reference DAC enable time	CPEN = 0→1, CPDACEN = 0→1, CPMSEL = 0, CPDACREFS = 1, CPDACBUF1 = 0F, Overdrive = 20 mV	T		8.5		µs
		CPEN = 0→1, CPDACEN = 0→1, CPMSEL = 1, CPDACREFS = 1, CPDACBUF1 = 0F, Overdrive = 20 mV			101		
t_{FDLY}	Propagation delay with analog filter active	CPMSEL = 0, CPFLTDY = 00, Overdrive = 20 mV, CPFLT = 1	T		150		ns
		CPMSEL = 0, CPFLTDY = 01, Overdrive = 20 mV, CPFLT = 1			350		
		CPMSEL = 0, CPFLTDY = 10, Overdrive = 20 mV, CPFLT = 1			1000		
		CPMSEL = 0, CPFLTDY = 11, Overdrive = 20 mV, CPFLT = 1			1900		
INL	Integral nonlinearity		T	–0.5		0.5	LSB
DNL	Differential nonlinearity		T	–0.5		0.5	LSB

(1) For details on the eCOMP C_{IN}, model, see 图 5-16.

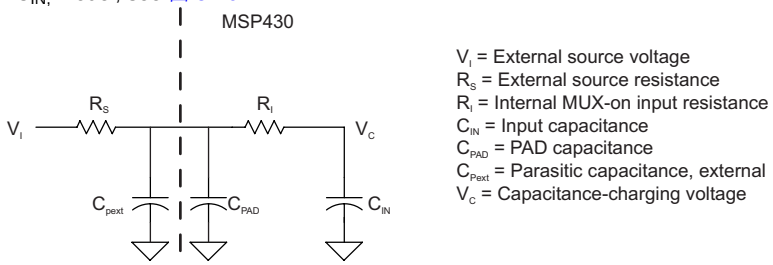

图 5-16. eCOMP Input Circuit

版权 © 2018–2019, Texas Instruments Incorporated

5.12.11 Smart Analog Combo (SAC) (MSP430FR235x Devices Only)

表 5-25 lists the characteristics of the SAC OA.

表 5-25. SAC, OA

over recommended ranges of supply voltage and operating free-air temperature (unless otherwise noted)

PARAMETER		TEST CONDITIONS	DEVICE GRADE	MIN	TYP	MAX	UNIT
V_{CC}	Supply voltage		T	2.0		3.6	V
V_{OS}	Input offset voltage		T	–5		5	mV
dV_{OS}/dT	Offset drift	OAPM = 0 (1)	T		3		µV/℃
		OAPM = 1 (1)			5		
I_B	Input bias current		T		50		pA
V_{CM}	Input voltage range		T	–0.1		V_{CC} + 0.1	V
I_{IDD}	Quiescent current	OAPM = 0	T		350		µA
		OAPM = 1			120		
E_{NI}	Input noise voltage	f = 0.1 Hz to 10 Hz, Vin = V_{CC}/2, OAPM = 0	T		40		µV
	Input noise voltage density	f = 1 kHz, Vin = V_{CC}/2, OAPM = 0			64		nV/√Hz
		f = 10 kHz, Vin = V_{CC}/2, OAPM = 0			28		
CMRR	Common-mode rejection ratio	OAPM = 0	T		70		dB
		OAPM = 1			80		
PSRR	Power supply rejection ratio	OAPM = 0	T		70		dB
		OAPM = 1			80		
GBW	Gain-bandwidth	OAPM = 0	T		2.8		MHz
		OAPM = 1			1.0		
A_{OL}	Open-loop voltage gain	OAPM = 0	T		100		dB
		OAPM = 1			100		
φ_M	Phase margin	C_L = 50 pF , R_L = 2 kΩ	T		65		deg
	Positive slew rate	C_L = 50 pF, OAPM = 0, step = 1	T		3		V/µs
		C_L = 50 pF, OAPM = 1, step = 1			1		
C_{in}	Input capacitance	Common mode	T		3		pF
V_O	Voltage output swing from supply rails	R_L = 10 kΩ	T		40	100	mV
t_{ST}	OA settling time	To 0.1% final value, G = +1, 1-V setup C_L = 50 pF, OAPM = 0	T		1		µs
		To 0.1% final value, G = +1, 1-V setup C_L = 50 pF, OAPM = 1			4.5		
THD	Total harmonic distortion	All gains	T		–60		dB

(1) Calculated using the box method: (MAX(–40°C to 105°C) – MIN(–40°C to 105°C)) / MIN(–40°C to 105°C) / (105°C – (–40°C))

版权 © 2018–2019, Texas Instruments Incorporated

表 5-25. SAC, OA (continued)

over recommended ranges of supply voltage and operating free-air temperature (unless otherwise noted)

PARAMETER		TEST CONDITIONS	DEVICE GRADE	MIN	TYP	MAX	UNIT
$G_{close\ loop}$	PGA closed-loop gain	Gain = 1, inverting mode, follower mode	T	0.99	1	1.01	
		Gain = 2, noninverting mode	T	1.98	2	2.02	
		Gain = 2, inverting mode	T	1.98	2	2.02	
		Gain = 3, noninverting mode	T	2.97	3	3.03	
		Gain = 4, inverting mode	T	3.96	4	4.04	
		Gain = 5, noninverting mode	T	4.95	5	5.05	
		Gain = 8, inverting mode	T	7.92	8	8.08	
		Gain = 9, noninverting mode	T	8.91	9	9.09	
		Gain = 16, inverting mode	T	15.84	16	16.16	
		Gain = 17, noninverting mode	T	16.83	17	17.17	
		Gain = 25, inverting mode	T	24.75	25	25.25	
		Gain = 26, noninverting mode	T	25.74	26	26.26	
		Gain = 32, inverting mode	T	31.68	32	32.32	
		Gain = 33, noninverting mode	T	32.67	33	33.33	

表 5-26 lists the characteristics of the SAC DAC.

表 5-26. SAC, DAC

over recommended ranges of supply voltage and operating free-air temperature (unless otherwise noted)

PARAMETER		TEST CONDITIONS		DEVICE GRADE	MIN	TYP	MAX	UNIT
V_{CC}	Supply voltage			T	2.4		3.6	V
I_{IDDR}	Quiescent current of resistor ladder into V_{REF_INT}			T		5		µA
I_{IOAD}	OA + DAC output load current	Low-power mode		T		0.2		mA
		High-power mode				1		
$t_{ST(FS)}$	OA + DAC settling time, full scale	DACDAT = 0x80h→0xF7Fh→0x80h	OAPM = 1	T			477	µs
			OAPM = 0				160	
$t_{ST(C-C)}$	OA + DAC settling time, code to code	DACDAT = 0x3F8h→408h→0x3F8h or DACDAT = 0xBF8h→C08h→0xBF8h	OAPM = 1	T		2	10	µs
			OAPM = 0			2	5	
INL	OA + DAC integral nonlinearity	DACSREF = DVCC, DVCC = 3.0 V		T	–4		4	LSB
DNL	OA + DAC differential nonlinearity	DACSREF = DVCC, DVCC = 3.0 V		T	–1		1	LSB
V_{OUT}	Output voltage range	No load, DACSREF = DVCC, DACDAT = 0		T	0		0.005	V
		R_{LOAD} = 3 kΩ , DACSREF = DVCC, DACDAT = 0			0		0.1	
		R_{LOAD} = 3 kΩ , DACSREF = DVCC, DACDAT = 0FFFh			DVCC – 0.1		DVCC	

版权 © 2018–2019, Texas Instruments Incorporated

5.12.12 FRAM

表 5-27 lists the characteristics of the FRAM.

表 5-27. FRAM

over recommended ranges of supply voltage and operating free-air temperature (unless otherwise noted)

PARAMETER		TEST CONDITIONS	DEVICE GRADE	MIN	TYP	MAX	UNIT
	Read and write endurance		T	10^{15}			cycles
$t_{Retention}$	Data retention duration	T_J = 25°C	T	100			years
		T_J = 70°C	T	40			
		T_J = 115°C	T	10			
I_{WRITE}	Current to write into FRAM		T	I_{READ} (1)	I_{READ} (1)	I_{READ} (1)	nA
I_{ERASE}	Erase current		T	N/A (2)	N/A (2)	N/A (2)	nA
t_{WRITE}	Write time		T	t_{READ} (3)	t_{READ} (3)	t_{READ} (3)	ns
T_{READ}	Read time	NWAITSx = 0	T	$1/f_{SYSTEM}$ (4)	$1/f_{SYSTEM}$ (4)	$1/f_{SYSTEM}$ (4)	ns
		NWAITSx = 1	T	$2/f_{SYSTEM}$ (4)	$2/f_{SYSTEM}$ (4)	$2/f_{SYSTEM}$ (4)	
		NWAITSx = 2	T	$3/f_{SYSTEM}$ (4)	$3/f_{SYSTEM}$ (4)	$3/f_{SYSTEM}$ (4)	

(1) Writing to FRAM does not require a setup sequence or additional power when compared to reading from FRAM. The FRAM read current I_{READ} is included in the active mode current consumption $I_{AM, FRAM}$ parameters.
(2) FRAM does not require a special erase sequence.
(3) Writing into FRAM is as fast as reading.
(4) The maximum read (and write) speed is specified by f_{SYSTEM} using the appropriate wait state settings (NWAITSx).

5.12.13 Emulation and Debug

表 5-28 lists the characteristics of the SBW interface.

表 5-28. JTAG, Spy-Bi-Wire Interface

over recommended ranges of supply voltage and operating free-air temperature (unless otherwise noted) (see 图 5-17)

PARAMETER		DEVICE GRADE	V_{CC}	MIN	TYP	MAX	UNIT
f_{SBW}	Spy-Bi-Wire input frequency	T	2.0 V, 3.0 V	0		8	MHz
$t_{SBW,Low}$	Spy-Bi-Wire low clock pulse duration	T	2.0 V, 3.0 V	0.028		15	µs
$t_{SU,SBWTDIO}$	SBWTDIO setup time (before falling edge of SBWTCK in TMS and TDI slot Spy-Bi-Wire)	T	2.0 V, 3.0 V	4			ns
$t_{HD,SBWTDIO}$	SBWTDIO hold time (after rising edge of SBWTCK in TMS and TDI slot Spy-Bi-Wire)	T	2.0 V, 3.0 V	19			ns
$t_{Valid,SBWTDIO}$	SBWTDIO data valid time (after falling edge of SBWTCK in TDO slot Spy-Bi-Wire)	T	2.0 V, 3.0 V			31	ns
$t_{SBW,\ En}$	Spy-Bi-Wire enable time (TEST high to acceptance of first clock edge) (1)	T	2.0 V, 3.0 V			110	µs
$t_{SBW,Ret}$	Spy-Bi-Wire return to normal operation time (2)	T	2.0 V, 3.0 V	15		100	µs
$R_{internal}$	Internal pulldown resistance on TEST	T	2.0 V, 3.0 V	20	35	50	kΩ

(1) Tools that access the Spy-Bi-Wire interface must wait for the $t_{SBW,En}$ time after pulling the TEST/SBWTCK pin high before applying the first SBWTCK clock edge.
(2) Maximum $t_{SBW,Rst}$ time after pulling or releasing the TEST/SBWTCK pin low, the Spy-Bi-Wire pins revert from their Spy-Bi-Wire function to their application function. This time applies only if the Spy-Bi-Wire mode was selected.

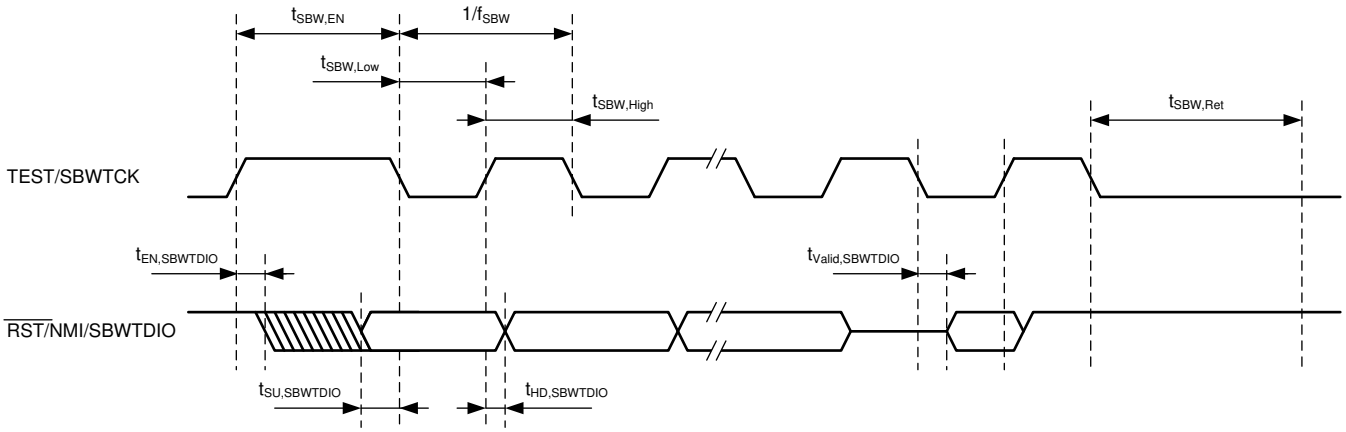

图 5-17. JTAG Spy-Bi-Wire Timing

版权 © 2018–2019, Texas Instruments Incorporated

表 5-29 lists the characteristics of the 4-wire JTAG interface.

表 5-29. JTAG, 4-Wire Interface

over recommended ranges of supply voltage and operating free-air temperature (unless otherwise noted) (see 图 5-18)

PARAMETER		DEVICE GRADE	V_{CC}	MIN	TYP	MAX	UNIT
f_{TCK}	TCK input frequency (1)	I, T	2.0 V, 3.0 V	0		10	MHz
$t_{TCK,Low}$	Spy-Bi-Wire low clock pulse duration	I, T	2.0 V, 3.0 V	15			ns
$t_{TCK,high}$	Spy-Bi-Wire high clock pulse duration	I, T	2.0 V, 3.0 V	15			ns
$t_{SU,TMS}$	TMS setup time (before rising edge of TCK)	I, T	2.0 V, 3.0 V	11			ns
$t_{HD,TMS}$	TMS hold time (after rising edge of TCK)	I, T	2.0 V, 3.0 V	3			ns
$t_{SU,TDI}$	TDI setup time (before rising edge of TCK)	I, T	2.0 V, 3.0 V	13			ns
$t_{HD,TDI}$	TDI hold time (after rising edge of TCK)	I, T	2.0 V, 3.0 V	5			ns
$t_{z\text{-}Valid,TDO}$	TDO high impedance to valid output time (after falling edge of TCK)	I, T	2.0 V, 3.0 V			26	ns
$t_{Valid,TDO}$	TDO to new valid output time (after falling edge of TCK)	I, T	2.0 V, 3.0 V			26	ns
$t_{Valid\text{-}Z,TDO}$	TDO valid to high impedance output time (after falling edge of TCK)	I, T	2.0 V, 3.0 V			26	ns
$t_{JTAG,Ret}$	Spy-Bi-Wire return to normal operation time	I, T	2.0 V, 3.0 V	15		100	µs
$R_{internal}$	Internal pulldown resistance on TEST	I, T	2.0 V, 3.0 V	20	35	50	kΩ

(1) Tools that access the Spy-Bi-Wire interface must wait for the $t_{SBW,En}$ time after pulling the TEST/SBWTCK pin high before applying the first SBWTCK clock edge.

版权 © 2018–2019, Texas Instruments Incorporated

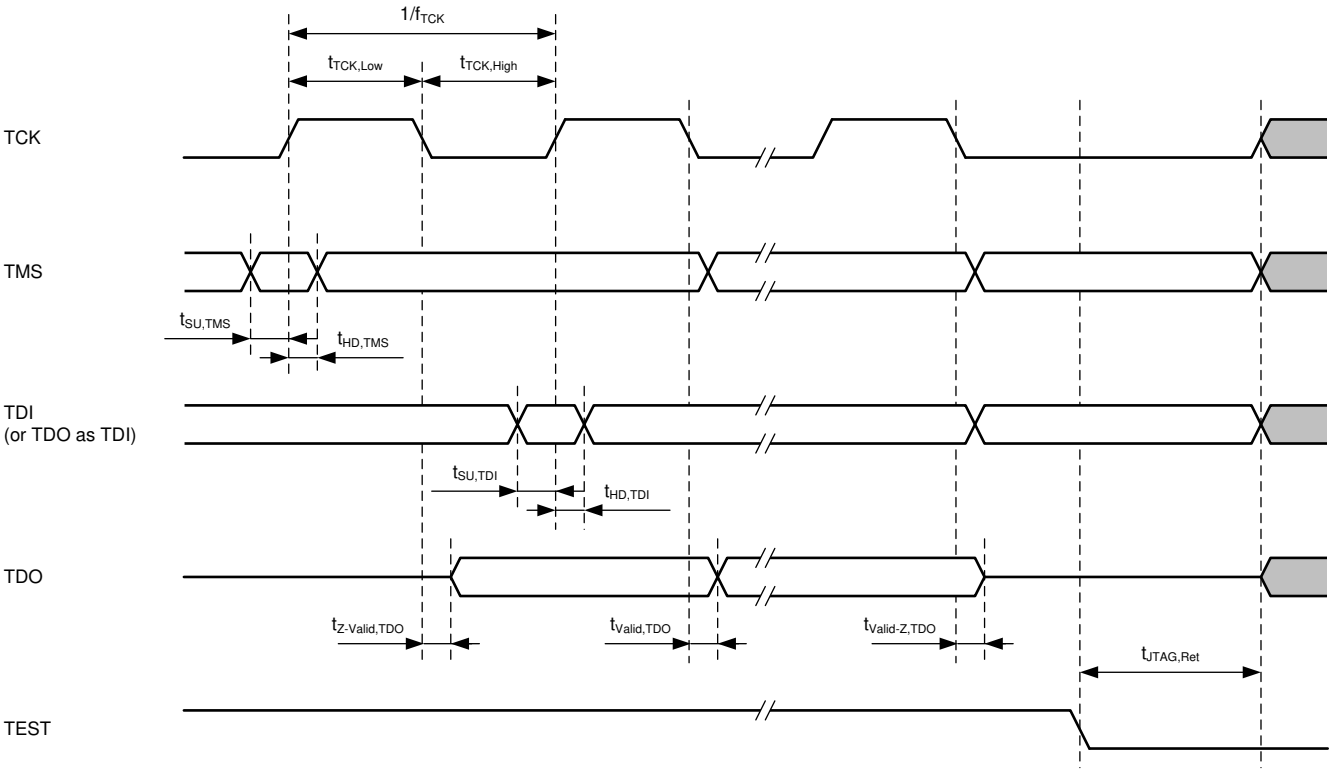

图 5-18. JTAG 4-Wire Timing

版权 © 2018–2019, Texas Instruments Incorporated

6 Detailed Description

6.1 CPU

The MSP430 CPU has a 16-bit RISC architecture that is highly transparent to the application. All operations, other than program-flow instructions, are performed as register operations in conjunction with seven addressing modes for source operand and four addressing modes for destination operand.

The CPU is integrated with 16 registers that provide reduced instruction execution time. The register-to-register operation execution time is one cycle of the CPU clock.

Four of the registers, R0 to R3, are dedicated as program counter (PC), stack pointer (SP), status register (SR), and constant generator (CG), respectively. The remaining registers are general-purpose registers.

Peripherals are connected to the CPU using data, address, and control buses, and can be handled with all instructions.

6.2 Operating Modes

The MCUs have one active mode and several software-selectable low-power modes of operation. An interrupt event can wake the device from a low-power mode (LPM0, LPM3, or LPM4), service the request, and return to the low-power mode on return from the interrupt program. Low-power modes LPM3.5 and LPM4.5 disable the core supply to minimize power consumption.

表 6-1. Operating Modes

MODE		AM	LPM0	LPM3	LPM4	LPM3.5	LPM4.5
		ACTIVE MODE	CPU OFF	STANDBY	OFF	ONLY RTC COUNTER	SHUTDOWN
Maximum system clock		24 MHz	24 MHz	40 kHz	0	40 kHz	0
Power consumption at 25°C, 3 V		142 µA/MHz	40 µA/MHz	1.43 µA with RTC counter only in LFXT	0.82 µA without SVS	620 nA with RTC counter only in LFXT	42 nA without SVS
Wake-up time		N/A	Instant	10 µs	10 µs	350 µs	350 µs
Wake-up events		N/A	All	All	I/O	RTC counter, I/O	I/O
Power	Regulator	Full regulation	Full regulation	Partial power down	Partial power down	Partial power down	Power down
	SVS	On	On	Optional	Optional	Optional	Optional
	Brownout	On	On	On	On	On	On
Clock(1)	MCLK	Active	Off	Off	Off	Off	Off
	SMCLK	Optional	Active	Off	Off	Off	Off
	FLL	Optional	Optional	Off	Off	Off	Off
	DCO	Optional	Optional	Off	Off	Off	Off
	MODCLK	Optional	Optional	Off	Off	Off	Off
	REFO	Optional	Optional	Optional	Off	Off	Off
	ACLK	Optional	Optional	Active	Off	Off	Off
	XT1HFCLK(2)	Optional	Optional	Off	Off	Off	Off
	XT1LFCLK	Optional	Optional	Optional	Off	Optional	Off
	VLOCLK	Optional	Optional	Optional	Off	Optional	Off
Core	CPU	On	Off	Off	Off	Off	Off
	FRAM	On	On	Off	Off	Off	Off
	RAM	On	On	On	On	Off	Off
	Backup Memory(3)	On	On	On	On	On	Off

(1) The status shown for LPM4 applies to internal clocks only.
(2) HFXT must be disabled before entering into LPM3, LPM4, or LPMx.5 mode.
(3) Backup memory contains one 32-byte register in the peripheral memory space. See 表 6-33 and 表 6-54 for its memory allocation.

版权 © 2018–2019, Texas Instruments Incorporated

表 6-1. Operating Modes (continued)

MODE		AM	LPM0	LPM3	LPM4	LPM3.5	LPM4.5
		ACTIVE MODE	CPU OFF	STANDBY	OFF	ONLY RTC COUNTER	SHUTDOWN
Peripherals	Timer0_B3	Optional	Optional	Optional	Off	Off	Off
	Timer1_B3	Optional	Optional	Optional	Off	Off	Off
	Timer2_B3	Optional	Optional	Optional	Off	Off	Off
	Timer3_B7	Optional	Optional	Optional	Off	Off	Off
	WDT	Optional	Optional	Optional	Off	Off	Off
	eUSCI_A0	Optional	Optional	Optional	Off	Off	Off
	eUSCI_A1	Optional	Optional	Optional	Off	Off	Off
	eUSCI_B0	Optional	Optional	Optional	Off	Off	Off
	eUSCI_B1	Optional	Optional	Optional	Off	Off	Off
	CRC	Optional	Optional	Off	Off	Off	Off
	ICC	Optional	Optional	Off	Off	Off	Off
	MPY32	Optional	Optional	Off	Off	Off	Off
	ADC	Optional	Optional	Optional	Off	Off	Off
	eCOMP0	Optional	Optional	Optional	Optional	Off	Off
	eCOMP1	Optional	Optional	Optional	Optional	Off	Off
	SAC0 (4)	Optional	Optional	Optional	Optional	Off	Off
	SAC1 (4)	Optional	Optional	Optional	Optional	Off	Off
	SAC2 (4)	Optional	Optional	Optional	Optional	Off	Off
	SAC3 (4)	Optional	Optional	Optional	Optional	Off	Off
	RTC Counter	Optional	Optional	Optional	Optional	Optional	Off
I/O	General digital input/output	On	Optional	State held	State held	State held	State held

(4) MSP430FR235x devices only

注

XT1CLK and VLOCLK can be active during LPM4 if requested by low-frequency peripherals.

版权 © 2018–2019, Texas Instruments Incorporated

6.3 Interrupt Vector Addresses

The interrupt vectors and the power-up start address are in the address range 0FFFFh to 0FF80h (see 表 6-2). The vector contains the 16-bit address of the appropriate interrupt-handler instruction sequence.

表 6-2. Interrupt Sources, Flags, and Vectors

INTERRUPT SOURCE	INTERRUPT FLAG	SYSTEM INTERRUPT	WORD ADDRESS	PRIORITY
System Reset Power up, brownout, supply supervisor External reset RST Watchdog time-out, key violation FRAM uncorrectable bit error detection Software POR, BOR FLL unlock error	SVSHIFG PMMRSTIFG WDTIFG PMMPORIFG, PMMBORIFG SYSRSTIV FLLULPUC	Reset	FFFEh	63, Highest
System NMI Vacant memory access JTAG mailbox FRAM access time error FRAM bit-error detection	VMAIFG JMBINIFG, JMBOUTIFG CBDIFG, UBDIFG	Non-Maskable	FFFCh	62
User NMI External NMI Oscillator fault	NMIIFG OFIFG	Non-Maskable	FFFAh	61
Timer0_B3	TB0CCR0 CCIFG0	Maskable	FFF8h	60
Timer0_B3	TB0CCR1 CCIFG1, TB0CCR2 CCIFG2, TB0IFG (TB0IV)	Maskable	FFF6h	59
Timer1_B3	TB1CCR0 CCIFG0	Maskable	FFF4h	58
Timer1_B3	TB1CCR1 CCIFG1, TB1CCR2 CCIFG2, TB1IFG (TB1IV)	Maskable	FFF2h	57
Timer2_B3	TB2CCR0 CCIFG0	Maskable	FFF0h	56
Timer2_B3	TB2CCR1 CCIFG1, TB2CCR2 CCIFG2, TB2IFG (TB2IV)	Maskable	FFEEh	55
Timer3_B7	TB3CCR0 CCIFG0	Maskable	FFECh	54
Timer3_B7	TB3CCR1 CCIFG1, TB3CCR2 CCIFG2, TB3CCR3 CCIFG3, TB3CCR4 CCIFG4, TB3CCR5 CCIFG5, TB3CCR6 CCIFG6, TB3IFG (TB3IV)	Maskable	FFEAh	53
RTC counter	RTCIFG	Maskable	FFE8h	52
Watchdog timer interval mode	WDTIFG	Maskable	FFE6h	51
eUSCI_A0 receive or transmit	UCTXCPTIFG, UCSTTIFG, UCRXIFG, UCTXIFG (UART mode) UCRXIFG, UCTXIFG (SPI mode) (UCA0IV))	Maskable	FFE4h	50
eUSCI_A1 receive or transmit	UCTXCPTIFG, UCSTTIFG, UCRXIFG, UCTXIFG (UART mode) UCRXIFG, UCTXIFG (SPI mode) (UCA0IV))	Maskable	FFE2h	49
eUSCI_B0 receive or transmit	UCB0RXIFG, UCB0TXIFG (SPI mode) UCALIFG, UCNACKIFG, UCSTTIFG, UCSTPIFG, UCRXIFG0, UCTXIFG0, UCRXIFG1, UCTXIFG1, UCRXIFG2, UCTXIFG2, UCRXIFG3, UCTXIFG3, UCCNTIFG, UCBIT9IFG,UCCLTOIFG(I^2C mode) (UCB0IV)	Maskable	FFE0h	48

版权 © 2018–2019, Texas Instruments Incorporated

表 6-2. Interrupt Sources, Flags, and Vectors (continued)

INTERRUPT SOURCE	INTERRUPT FLAG	SYSTEM INTERRUPT	WORD ADDRESS	PRIORITY
eUSCI_B1 receive or transmit	UCB1RXIFG, UCB1TXIFG (SPI mode) UCALIFG, UCNACKIFG, UCSTTIFG, UCSTPIFG, UCRXIFG0, UCTXIFG0, UCRXIFG1, UCTXIFG1, UCRXIFG2, UCTXIFG2, UCRXIFG3, UCTXIFG3, UCCNTIFG, UCBIT9IFG,UCCLTOIFG(I^2C mode) (UCB0IV)	Maskable	FFDEh	47
ADC	ADCIFG0, ADCINIFG, ADCLOIFG, ADCHIIFG, ADCTOVIFG, ADCOVIFG (ADCIV)	Maskable	FFDCh	46
eCOMP0_eCOMP1	CPIIFG, CPIFG (CP1IV, CP0IV)	Maskable	FFDAh	45
SAC0_SAC2(1)	SAC2DACSTS DACIFG (SAC2IV) SAC0DACSTS DACIFG, SAC0IV)	Maskable	FFD8h	44
SAC1_SAC3(1)	SAC3DACSTS DACIFG (SAC3IV) SAC1DACSTS DACIFG, SAC1IV)	Maskable	FFD6h	43
P1	P1IFG.0 to P1IFG.7 (P1IV)	Maskable	FFD4h	42
P2	P2IFG.0 to P2IFG.7 (P2IV)	Maskable	FFD2h	41
P3	P3IFG.0 to P3IFG.7 (P3IV)	Maskable	FFD0h	40
P4	P4IFG.0 to P4IFG.7 (P4IV)	Maskable	FFCEh	39
Reserved	Reserved	Maskable	FFCCh to FF88h	

(1) MSP430FR235x devices only

表 6-3 lists the BSL signature settings. The BSL setting on MSP430FR2355 can be customized by using BSL configuration and I^2C address. See the *MSP430 FRAM Device Bootloader (BSL) User's Guide* for more details.

表 6-3. BSL Signatures

SIGNATURE	WORD ADDRESS
BSL I2C Address(1)	FFA0h
BSL Config	0FF8Ah
BSL Config Signature	0FF88h
BSL Signature2	0FF86h
BSL Signature1	0FF84h
JTAG Signature2	0FF82h
JTAG Signature1	0FF80h

(1) 7-bit address BSL I^2C interface

版权 © 2018–2019, Texas Instruments Incorporated

6.4 Memory Organization

表 6-4 summarizes the memory map of the devices.

表 6-4. Memory Organization

	ACCESS	MSP430FR2355	MSP430FR2353
Memory (FRAM) Main: interrupt vectors and signatures Main: code memory	Read/Write (Optional Write Protect)(1)	32KB FFFFh to FF80h FFFFh to 8000h	16KB FFFFh to FF80h FFFFh to C000h
RAM	Read/Write	4KB 2FFFh to 2000h	2KB 27FFh to 2000h
Information memory (FRAM)	Read/Write(2)	512 bytes 19FFh to 1800h	512 bytes 19FFh to 1800h
Driver library and FFT library (ROM)	Read only	20KB FAC00h to FFBFFh	20KB FAC00h to FFBFFh
Peripherals	Read/Write	4KB 0FFFh to 0020h	4KB 0FFFh to 0020h
Tiny RAM	Read/Write	26 bytes 001Fh to 0006h	26 bytes 001Fh to 0006h
Reserved(3)	Read	6 bytes 0005h to 0000h	6 bytes 0005h to 0000h

(1) The program FRAM can be write protected by setting PFWP bit in SYSCFG0 register. See the SYS chapter in *MSP430FR4xx and MSP430FR2xx Family User's Guide* for more details.
(2) The information FRAM can be write protected by setting DFWP bit in SYSCFG0 register. See the SYS chapter in *MSP430FR4xx and MSP430FR2xx Family User's Guide* for more details.
(3) Reads as D032h at 00h (opcode: BIS.W LPM4, SR), reads as 00F0h at 02h (opcode: BIS.W LPM4, SR), and reads as 3FFFh at 04h (opcode: JMP$)

6.5 Bootloader (BSL)

The BSL enables users to program the FRAM memory or RAM using a UART or I^2C serial interface. Access to the device memory through the BSL is protected by an user-defined password. Use of the BSL requires four pins (see 表 6-5 and 表 6-6). BSL entry requires a specific entry sequence on the $\overline{\text{RST}}$/NMI/SBWTDIO and TEST/SBWTCK pins. For complete description of the features of the BSL and its implementation, see *MSP430 FRAM Devices Bootloader (BSL) User's Guide*.

表 6-5. UART BSL Pin Requirements and Functions

DEVICE SIGNAL	BSL FUNCTION
$\overline{\text{RST}}$/NMI/SBWTDIO	Entry sequence signal
TEST/SBWTCK	Entry sequence signal
P1.7	Data transmit
P1.6	Data receive
DVCC	Power supply
DVSS	Ground supply

表 6-6. I^2C BSL Pin Requirements and Functions

DEVICE SIGNAL	BSL FUNCTION
$\overline{\text{RST}}$/NMI/SBWTDIO	Entry sequence signal
TEST/SBWTCK	Entry sequence signal
P1.2	Data receive and transmit
P1.3	Clock
DVCC	Power supply
DVSS	Ground supply

版权 © 2018–2019, Texas Instruments Incorporated

6.6 JTAG Standard Interface

The MSP430 family supports the standard JTAG interface which requires four signals for sending and receiving data. The JTAG signals are shared with general-purpose I/O. The TEST/SBWTCK pin is used to enable the JTAG signals. In addition to these signals, the $\overline{\text{RST}}$/NMI/SBWTDIO is required to interface with MSP430 development tools and device programmers. 表 6-7 lists the JTAG pin requirements. For further details on interfacing to development tools and device programmers, see the *MSP430 Hardware Tools User's Guide*.

表 6-7. JTAG Pin Requirements and Function

DEVICE SIGNAL	DIRECTION	JTAG FUNCTION
P1.4/UCA0STE/TCK/A4	IN	JTAG clock input
P1.5/UCA0CLK/TMS/OA1O/A5	IN	JTAG state control
P1.6/UCA0RXD/UCA0SOMI/TB0.1/TDI/TCLK/OA1-/A6	IN	JTAG data input, TCLK input
P1.7/UCA0TXD/UCA0SIMO/TB0.2/TDO/OA1+/A7/VREF+	OUT	JTAG data output
TEST/SBWTCK	IN	Enable JTAG pins
RST/NMI/SBWTDIO	IN	External reset
DVCC	–	Power supply
DVSS	–	Ground supply

6.7 Spy-Bi-Wire Interface (SBW)

The MSP430 family supports the two wire Spy-Bi-Wire interface. Spy-Bi-Wire can be used to interface with MSP430 development tools and device programmers. 表 6-8 shows the Spy-Bi-Wire interface pin requirements. For further details on interfacing to development tools and device programmers, see the *MSP430 Hardware Tools User's Guide*.

表 6-8. Spy-Bi-Wire Pin Requirements and Functions

DEVICE SIGNAL	DIRECTION	SBW FUNCTION
TEST/SBWTCK	IN	Spy-Bi-Wire clock input
RST/NMI/SBWTDIO	IN, OUT	Spy-Bi-Wire data input and output
DVCC	–	Power supply
DVSS	–	Ground supply

6.8 FRAM

The FRAM can be programmed using the JTAG port, Spy-Bi-Wire (SBW), the BSL, or in-system by the CPU. Features of the FRAM include:

- Byte and word access capability
- Programmable wait state generation
- Error correction coding (ECC)

版权 © 2018–2019, Texas Instruments Incorporated

6.9 Memory Protection

The device features memory protection of user access authority and write protection include:

- Securing the whole memory map to prevent unauthorized access from JTAG port or BSL, by writing JTAG and BSL signatures using the JTAG port, SBW, the BSL, or in-system by the CPU.
- Write protection enabled to prevent unwanted write operation to FRAM contents by setting the control bits with accordingly password in System Configuration register 0. For more detailed information, see the SYS chapter in the *MSP430FR4xx and MSP430FR2xx Family User's Guide*.

6.10 Peripherals

Peripherals are connected to the CPU through data, address, and control buses. All peripherals can be handled by using all instructions in the memory map. For complete module description, see the *MSP430FR4xx and MSP430FR2xx Family User's Guide*.

6.10.1 Power Management Module (PMM) and On-Chip Reference Voltages

The PMM includes an integrated voltage regulator that supplies the core voltage to the device. The PMM also includes supply voltage supervisor (SVS) and brownout protection. The brownout reset circuit (BOR) is implemented to provide the proper internal reset signal to the device during power-on and power-off. The SVS circuitry detects if the supply voltage drops below a user-selectable safe level. SVS circuitry is available on the primary supply.

The device contains three on-chip references:

- Internal shared reference (1.5 V, 2.0 V, or 2.5 V)
- 1.2 V for external reference (VREF pin)
- 1.2 V low-power reference for eCOMP

The internal shared reference is controlled by PMM settings to select 1.5 V, 2.0 V, or 2.5 V. This reference is internally connected to ADC channel 13. DVCC is internally connected to ADC channel 15. When DVCC is set as the reference voltage for ADC conversion, the DVCC can be easily represent as 公式 1 by using ADC sampling reference without any external components support.

DVCC = (4095 × reference voltage) ÷ ADC result (1)

The internal shared reference (1.5 V, 2.0 V, or 2.5 V) is also internally connected to the built-in DAC of the comparator and SAC (MSP430FR235x devices only) built-in 12-bit DAC as the reference voltage. The source can be selected by setting the specific register configuration of each module For more information, see the *MSP430FR4xx and MSP430FR2xx Family User's Guide*.

P1.7/UCA0TXD/UCA0SIMO/TB0.2/TDO/OA1+/A7/VREF+ can support a buffered external 1.2-V output when EXTREFEN = 1 in the PMMCTL2 register. ADC channel 7 can also be selected to monitor this voltage. For more information, see the *MSP430FR4xx and MSP430FR2xx Family User's Guide*.

An additional low-power 1.2-V reference is internally connected to eCOMP0 and eCOMP1. This reference is activated by enabling eCOMP with the channel as threshold source. See 节 6.10.13 for more details.

6.10.2 Clock System (CS) and Clock Distribution

The clock system includes a 32-kHz low-frequency or up to 24-MHz high-frequency crystal oscillator (XT1), an internal very low-power low-frequency oscillator (VLO), an integrated 32-kHz RC oscillator (REFO), an integrated internal digitally controlled oscillator (DCO) that can use frequency-locked loop (FLL) locking with internal or external 32-kHz reference clock, and on-chip asynchronous high-speed clock (MODOSC). The clock system is designed to target cost-effective designs with minimal external components. A fail-safe mechanism is designed for XT1. The clock system module supports the following clock signals.

- Main Clock (MCLK): the system clock used by the CPU and all relevant peripherals accessed by the bus. All clock sources except MODOSC can be selected as the source with a predivider of 1, 2, 4, 8, 16, 32, 64, or 128.

版权 © 2018–2019, Texas Instruments Incorporated

- Sub-Main Clock (SMCLK): the subsystem clock used by the peripheral modules. SMCLK derives from the MCLK with a predivider of 1, 2, 4, or 8. This means SMCLK is always equal to or less than MCLK.
- Auxiliary Clock (ACLK): this clock derived from the external XT1 clock, internal VLO, or internal REFO clock up to 40 kHz.

All peripherals have one or several clock sources, depending on specific functionality. 表 6-9 lists the clock distribution used in this device.

表 6-9. Clock Distribution

	CLOCK SOURCE SELECT BITS	MCLK	SMCLK	ACLK	MODCLK	VLOCLK	EXTERNAL PIN
Frequency Range		DC to 24 MHz	DC to 24 MHz	DC to 40 kHz	3.8 MHz ±21%	10 kHz ±50%	–
CPU	N/A	Default	–	–	–	–	–
FRAM	N/A	Default	–	–	–	–	–
RAM	N/A	Default	–	–	–	–	–
CRC	N/A	Default	–	–	–	–	–
MPY32	N/A	Default	–	–	–	–	–
ICC	N/A	Default	–	–	–	–	–
I/O	N/A	Default	–	–	–	–	–
TB0	TBSSEL	–	10b	01b	–	–	00b (TB0CLK pin)
TB1	TBSSEL	–	10b	01b	–	–	00b (TB1CLK pin)
TB2	TBSSEL	–	10b	01b	–	–	00b (TB2CLK pin)
TB3	TBSSEL	–	10b	01b	–	–	00b (TB3CLK pin)
eUSCI_A0	UCSSEL	–	10b or 11b	01b	–	–	00b (UCA0CLK pin)
eUSCI_A1	UCSSEL	–	10b or 11b	01b	–	–	00b (UCA1CLK pin)
eUSCI_B0	UCSSEL	–	10b or 11b	01b	–	–	00b (UCB0CLK pin)
eUSCI_B1	UCSSEL	–	10b or 11b	01b	–	–	00b (UCB1CLK pin)
MFM	N/A	–	Default	–	–	–	–
WDT	WDTSSEL	–	00b	01b	–	10b	–
ADC	ADCSSEL	–	10b or 11b	01b	00b	–	–
RTC Counter	RTCSS	–	01b(1)	01b(1)	–	11b	–

(1) Controlled by the RTCCKSEL bit in the SYSCFG2 register.

表 6-10. XTCLK Distribution

OPERATION MODE	CLOCK SOURCE SELECT BITS	XTHFCLK AM to LPM0	XTLFCLK AM to LPM3	XTLFCLK (LPMx.5) AM to LPM3.5
MCLK	SELMS	10b	10b	10b
SMCLK	SELMS	10b	10b	10b
REFO	SELREF	0b	0b	0b
ACLK	SELA	0b	0b	0b
RTC	RTCSS	–	10b	10b

版权 © 2018–2019, Texas Instruments Incorporated

6.10.3 General-Purpose Input/Output Port (I/O)

Up to 44 I/O ports are implemented.

- P1, P2, P3, and P4 are full 8-bit ports; P5 and P6 feature up to 5-bit and 7-bit ports, respectively.
- All individual I/O bits are independently programmable.
- Any combination of input, output, is possible for P1, P2, P3, P4, P5, and P6. Interrupt conditions are possible in P1, P2, P3, and P4.
- Programmable pullup or pulldown on all ports.
- Edge-selectable interrupt and LPM3.5, LPM4 and LPM4.5 wake-up input capability is available in P1, P2, P3, and P4.
- Read and write access to port-control registers is supported by all instructions.
- Ports can be accessed byte-wise or word-wise in pairs.

注

Configuration of digital I/Os after BOR reset

To prevent cross currents during start-up of the device, all port pins are high-impedance with Schmitt triggers and module functions disabled. To enable the I/O functions after a BOR reset, first configure the ports and then clear the LOCKLPM5 bit. For details, see the *Configuration After Reset* section in the *Digital I/O* chapter of the *MSP430FR4xx and MSP430FR2xx Family User's Guide*.

6.10.4 Watchdog Timer (WDT)

The primary function of the WDT module is to perform a controlled system restart after a software problem occurs. If the selected time interval expires, a system reset is generated. If the watchdog function is not needed in an application, the module can be configured as interval timer and can generate interrupts at selected time intervals.

表 6-11 lists the clock sources that can be used by the WDT.

表 6-11. WDT Clocks

WDTSSEL	NORMAL OPERATION (WATCHDOG AND INTERVAL TIMER MODE)
00	SMCLK
01	ACLK
10	VLOCLK
11	Reserved

6.10.5 System Module (SYS)

The SYS module handles many of the system functions within the device. These include power-on reset (POR) and power-up clear (PUC) handling, NMI source selection and management, reset interrupt vector generators (see 表 6-12), bootloader entry mechanisms, and configuration management (device descriptors). SYS also includes a data exchange mechanism through SBW called a JTAG mailbox that can be used in the application.

表 6-12. System Module Interrupt Vector Registers

INTERRUPT VECTOR REGISTER	ADDRESS	INTERRUPT EVENT	VALUE	PRIORITY
SYSRSTIV, System Reset	015Eh	No interrupt pending	00h	
		Brownout (BOR)	02h	Highest
		RSTIFG $\overline{RST}$/NMI (BOR)	04h	
		PMMSWBOR software BOR (BOR)	06h	
		LPMx.5 wake up (BOR)	08h	
		Security violation (BOR)	0Ah	
		Reserved	0Ch	
		SVSHIFG SVSH event (BOR)	0Eh	
		Reserved	10h	
		Reserved	12h	
		PMMSWPOR software POR (POR)	14h	
		WDTIFG watchdog time-out (PUC)	16h	
		WDTPW password violation (PUC)	18h	
		FRCTLPW password violation (PUC)	1Ah	
		Uncorrectable FRAM bit error detection	1Ch	
		Peripheral area fetch (PUC)	1Eh	
		PMMPW PMM password violation (PUC)	20h	
		Reserved	22h	
		FLL unlock (PUC)	24h	
		Reserved	26h to 3Eh	Lowest
SYSSNIV, System NMI	015Ch	No interrupt pending	00h	
		SVS low-power reset entry	02h	Highest
		Uncorrectable FRAM bit error detection	04h	
		Reserved	06h	
		Reserved	08h	
		Reserved	0Ah	
		Reserved	0Ch	
		Reserved	0Eh	
		Reserved	10h	
		VMAIFG Vacant memory access	12h	
		JMBINIFG JTAG mailbox input	14h	
		JMBOUTIFG JTAG mailbox output	16h	
		Correctable FRAM bit error detection	18h	
		Reserved	1Ah to 1Eh	Lowest
SYSUNIV, User NMI	015Ah	No interrupt pending	00h	
		NMIIFG NMI pin or SVS_H event	02h	Highest
		OFIFG oscillator fault	04h	
		Reserved	06h to 1Eh	Lowest

6.10.6 Cyclic Redundancy Check (CRC)

The 16-bit cyclic redundancy check (CRC) module produces a signature based on a sequence of data values and can be used for data checking purposes. The CRC generation polynomial is compliant with CRC-16-CCITT standard of $x^{16} + x^{12} + x^5 + 1$.

版权 © 2018–2019, Texas Instruments Incorporated

6.10.7 Interrupt Compare Controller (ICC)

The Interrupt Compare Controller (ICC) allows all maskable interrupt sources to be scheduled in a preemptive mechanism. Each interrupt source is specified as a source of ICC module. Each source supports a 4-level software interrupt priority other than the one tired with interrupt vector. When ICC module is enabled, the ISR in lower software priority can be interrupted by higher priority. It is required to enable GIE in ISR for proper ICC operation. For details, see the ICC chapter of the *MSP430FR4xx and MSP430FR2xx Family User's Guide*. 表 6-13 lists the ICC source configurations.

表 6-13. ICC Interrupt Source Assignments

REGISTER	BITS	INTERRUPT SOURCE	INTERRUPT FLAG	SYSTEM INTERRUPT	WORD ADDRESS	PRIORITY
ICCILRS0	ILSR0	P4	P4IFG.0 to P4IFG.7 (P4IV)	Maskable	FFCEh	39
	ILSR1	P3	P3IFG.0 to P3IFG.7 (P3IV)	Maskable	FFD0h	40
	ILSR2	P2	P2IFG.0 to P2IFG.7 (P2IV)	Maskable	FFD2h	41
	ILSR3	P1	P1IFG.0 to P1IFG.7 (P1IV)	Maskable	FFD4h	42
	ILSR4	SAC3 DAC, SAC1 DAC(1)	DACIFG, (SAC3IV, SAC1IV)(1)	Maskable	FFD6h	43
	ILSR5	SAC2 DAC, SAC0 DAC(1)	DACIFG (SAC2IV, SAC0IV)(1)	Maskable	FFD8h	44
	ILSR6	eCOMP1, eCOMP0	CPIIFG, CPIFG (CP1IV, CP0IV)	Maskable	FFDAh	45
	ILSR7	ADC	ADCIFG0, ADCINIFG, ADCLOIFG, ADCHIIFG, ADCTOVIFG, ADCOVIFG (ADCIV)	Maskable	FFDCh	46
ICCILRS1	ILSR8	eUSCI_B1 Receive or Transmit	UCB1RXIFG, UCB1TXIFG (SPI mode) UCALIFG, UCNACKIFG, UCSTTIFG, UCSTPIFG, UCRXIFG0, UCTXIFG0, UCRXIFG1, UCTXIFG1, UCRXIFG2, UCTXIFG2, UCRXIFG3, UCTXIFG3, UCCNTIFG, UCBIT9IFG,UCCLTOIFG(I^2C mode) (UCB0IV)	Maskable	FFDEh	47
	ILSR9	eUSCI_B0 Receive or Transmit	UCB0RXIFG, UCB0TXIFG (SPI mode) UCALIFG, UCNACKIFG, UCSTTIFG, UCSTPIFG, UCRXIFG0, UCTXIFG0, UCRXIFG1, UCTXIFG1, UCRXIFG2, UCTXIFG2, UCRXIFG3, UCTXIFG3, UCCNTIFG, UCBIT9IFG,UCCLTOIFG(I^2C mode) (UCB0IV)	Maskable	FFE0h	48
	ILSR10	eUSCI_A1 Receive or Transmit	UCTXCPTIFG, UCSTTIFG, UCRXIFG, UCTXIFG (UART mode) UCRXIFG, UCTXIFG (SPI mode) (UCA0IV))	Maskable	FFE2h	49
	ILSR11	eUSCI_A0 Receive or Transmit	UCTXCPTIFG, UCSTTIFG, UCRXIFG, UCTXIFG (UART mode) UCRXIFG, UCTXIFG (SPI mode) (UCA0IV))	Maskable	FFE4h	50
	ILSR12	Watchdog Timer Interval mode	WDTIFG	Maskable	FFE6h	51
	ILSR13	RTC Counter	RTCIFG	Maskable	FFE8h	52
	ILSR14	Timer3_B7	TB3CCR1 CCIFG1, TB3CCR2 CCIFG2, TB3CCR3 CCIFG3, TB3CCR4 CCIFG4, TB3CCR5 CCIFG5, TB3CCR6 CCIFG6, TB3IFG (TB3IV)	Maskable	FFEAh	53
	ILSR15	Timer3_B7	TB3CCR0 CCIFG0	Maskable	FFECh	54

(1) MSP430FR235x devices only

表 6-13. ICC Interrupt Source Assignments (continued)

REGISTER	BITS	INTERRUPT SOURCE	INTERRUPT FLAG	SYSTEM INTERRUPT	WORD ADDRESS	PRIORITY
ICCILRS2	ILSR16	Timer2_B3	TB2CCR1 CCIFG1, TB2CCR2 CCIFG2, TB2IFG (TB2IV)	Maskable	FFEEh	55
	ILSR17	Timer2_B3	TB2CCR0 CCIFG0	Maskable	FFF0h	56
	ILSR18	Timer1_B3	TB1CCR1 CCIFG1, TB1CCR2 CCIFG2, TB1IFG (TB1IV)	Maskable	FFF2h	57
	ILSR19	Timer1_B3	TB1CCR0 CCIFG0	Maskable	FFF4h	58
	ILSR20	Timer0_B3	TB0CCR1 CCIFG1, TB0CCR2 CCIFG2, TB0IFG (TB0IV)	Maskable	FFF6h	59
	ILSR21	Timer0_B3	TB0CCR0 CCIFG0	Maskable	FFF8h	60
	ILSR22	N/A	N/A	N/A	N/A	N/A
	ILSR23	N/A	N/A	N/A	N/A	N/A
ICCILRS3	ILSR24	N/A	N/A	N/A	N/A	N/A
	ILSR25	N/A	N/A	N/A	N/A	N/A
	ILSR26	N/A	N/A	N/A	N/A	N/A
	ILSR27	N/A	N/A	N/A	N/A	N/A
	ILSR28	N/A	N/A	N/A	N/A	N/A
	ILSR29	N/A	N/A	N/A	N/A	N/A
	ILSR30	N/A	N/A	N/A	N/A	N/A
	ILSR31	N/A	N/A	N/A	N/A	N/A

6.10.8 Enhanced Universal Serial Communication Interface (eUSCI_A0, eUSCI_A1, eUSCI_B0, eUSCI_B1)

The eUSCI modules are used for serial data communications (see 表 6-14). The eUSCI_A module supports either UART or SPI communications. The eUSCI_B module supports either SPI or I^2C communications. Additionally, eUSCI_A supports automatic baud-rate detection and IrDA..

表 6-14. eUSCI Pin Configurations

	PIN	UART	SPI
eUSCI_A0	P1.7	TXD	SIMO
	P1.6	RXD	SOMI
	P1.5	–	SCLK
	P1.4	–	STE
eUSCI_A1	**PIN**	**UART**	**SPI**
	P4.3	TXD or $\overline{\text{TXD}}$	SIMO
	P4.2	RXD or $\overline{\text{RXD}}$	SOMI
	P4.1	–	SCLK
	P4.0	–	STE
eUSCI_B0	**PIN**	**I^2C**	**SPI**
	P1.3	SCL	SOMI
	P1.2	SDA	SIMO
	P1.1	–	SCLK
	P1.0	–	STE
eUSCI_B1	**PIN**	**I^2C**	**SPI**
	P4.7	SCL	SOMI
	P4.6	SDA	SIMO
	P4.5	–	SCLK
	P4.4	–	STE

版权 © 2018–2019, Texas Instruments Incorporated

The eUSCI_A1 can work as UART in inverting polarity mode by port settings (see 表 6-15). When PSEL = 01b, the normal UART or SPI mode is used. When PSEL = 10b, the inverted UART mode is enabled to transmit and receive data in inverted polarity. In this mode, eUSCI_A1 can also wake up the device from LPM3 by detecting a rising edge of start bit according the falling edge in normal mode.

表 **6-15. eUSCI_A1 UART Polarity Configurations**

eUSCI_A1	PSEL = 01b	PSEL = 10b
P4.3	TXD	$\overline{\text{TXD}}$
P4.4	RXD	$\overline{\text{RXD}}$

6.10.9 Timers (Timer0_B3, Timer1_B3, Timer2_B3, Timer3_B7)

The Timer0_B3, Timer1_B3, and Timer2_B3 modules are 16-bit timers and counters with three capture/compare registers each. Timer3_B7 is a 16-bit timers with seven capture/compare registers each. Each can support multiple captures or compares, PWM outputs, and interval timing (see 表 6-16, 表 6-17, 表 6-18, and 表 6-19). Each has extensive interrupt capabilities. Interrupts can be generated from the counter on overflow conditions and from each of the capture/compare registers. The CCR0 registers on all timers are not externally connected and can only be used for hardware period timing and interrupt generation. In Up Mode, they can be used to set the overflow value of the counter.

表 **6-16. Timer0_B3 Signal Connections**

PORT PIN	DEVICE INPUT SIGNAL	MODULE INPUT NAME	MODULE BLOCK	MODULE OUTPUT SIGNAL	DEVICE OUTPUT SIGNAL
P2.7	TB0CLK	TBCLK	Timer	N/A	
	ACLK (internal)	ACLK			
	SMCLK (internal)	SMCLK			
	N/A	INCLK			
	From RTC (internal)	CCI0A	CCR0	TB0	Not used
	ACLK (internal)	CCI0B			Timer1_B3 CCI0B input
	DVSS	GND			
	DVCC	V_{CC}			
P1.6	TB0.1	CCI1A	CCR1	TB1	TB0.1
	From eCOMP0.O (internal)	CCI1B			Timer1_B3 CCI1B input
	DVSS	GND			
	DVCC	V_{CC}			
P1.7	TB0.2	CCI2A	CCR2	TB2	TB0.2
	N/A	CCI2B			Timer1_B3 INCLK Timer1_B3 CCI2B input, IR carrier input
	DVSS	GND			
	DVCC	V_{CC}			

表 6-17. Timer1_B3 Signal Connections

PORT PIN	DEVICE INPUT SIGNAL	MODULE INPUT NAME	MODULE BLOCK	MODULE OUTPUT SIGNAL	DEVICE OUTPUT SIGNAL
P2.2	TB1CLK	TBCLK	Timer	N/A	
	ACLK (internal)	ACLK			
	SMCLK (internal)	SMCLK			
	Timer0_B3 CCR2B output (internal)	INCLK			
	Timer3_B7 CCR0B output (internal)	CCI0A	CCR0	TB0	Not used
	Timer0_B3 CCR0B output (internal)	CCI0B			Not used
	DVSS	GND			
	DVCC	V_{CC}			
P2.0	TB1.1	CCI1A	CCR1	TB1	TB1.1
	Timer0_B3 CCR1B output (internal)	CCI1B			To ADC trigger
	DVSS	GND			
	DVCC	V_{CC}			
P2.1	TB1.2	CCI2A	CCR2	TB2	TB1.2
	Timer0_B3 CCR2B output (internal)	CCI2B			IR coding input
	DVSS	GND			
	DVCC	V_{CC}			

表 6-18. Timer2_B3 Signal Connections

PORT PIN	DEVICE INPUT SIGNAL	MODULE INPUT NAME	MODULE BLOCK	MODULE OUTPUT SIGNAL	DEVICE OUTPUT SIGNAL
P2.7	TB2CLK	TBCLK	Timer	N/A	
	ACLK (internal)	ACLK			
	SMCLK (internal)	SMCLK			
	$\overline{\text{TB2CLK}}$	INCLK			
	Not used	CCI0A	CCR0	TB0	Not used
	DVSS	GND			
	DVCC	V_{CC}			
	MFM Complete Event	CCI0B			MFM start trigger
P5.0	TB2.1	CCI1A	CCR1	TB1	TB2.1
	From eCOMP1.O (internal)	CCI1B			To SAC DAC update trigger 10b(1)
	DVSS	GND			
	DVCC	V_{CC}			
P5.1	TB2.2	CCI2A	CCR2	TB2	TB2.2
	Not used	CCI2B			To SAC DAC update trigger 11b(1)
	DVSS	GND			
	DVCC	V_{CC}			

(1) MSP430FR235x devices only

版权 © 2018–2019, Texas Instruments Incorporated

表 **6-19. Timer3_B7 Signal Connections**

PORT PIN	DEVICE INPUT SIGNAL	MODULE INPUT NAME	MODULE BLOCK	MODULE OUTPUT SIGNAL	DEVICE OUTPUT SIGNAL
P6.6	TB3CLK	TBCLK	Timer	N/A	
	ACLK (internal)	ACLK			
	SMCLK (internal)	SMCLK			
	$\overline{\text{TB3CLK}}$	INCLK			
	Not used	CCI0A	CCR0	TB0	Not used
	Not used	CCI0B			To Timer1_B3 CCI0A
	DVSS	GND			
	DVCC	V_{CC}			
P6.0	TB3.1	CCI1A	CCR1	TB1	TB3.1
	Not used	CCI1B			
	DVSS	GND			
	DVCC	V_{CC}			
P6.1	TB3.2	CCI2A	CCR2	TB2	TB3.2
P4.0	ISORXD	CCI2B			AND UCA1TXD ISOTXD
	DVSS	GND			
	DVCC	V_{CC}			
P6.2	TB3.3	CCI3A	CCR3	TB3	TB3.3
	Not used	CCI3B			
	DVSS	GND			
	DVCC	V_{CC}			
P6.3	TB3.4	CCI4A	CCR4	TB4	TB3.4
	Not used	CCI4B			Not used
	DVSS	GND			
	DVCC	V_{CC}			
P6.4	TB3.5	CCI5A	CCR5	TB5	TB3.5
	Not used	CCI5B			Not used
	DVSS	GND			
	DVCC	V_{CC}			
P6.5	TB3.6	CCI6A	CCR6	TB6	TB3.6
	Not used	CCI6B			Not used
	DVSS	GND			
	DVCC	V_{CC}			

The interconnection of Timer0_B3 and Timer1_B3 can be used to modulate the eUSCI_A pin of UCA0TXD/UCA0SIMO in either ASK or FSK mode, with which a user can easily acquire a modulated infrared command for directly driving an external IR diode. The IR functions are fully controlled by SYS configuration registers 1 including IREN (enable), IRPSEL (polarity select), IRMSEL (mode select), IRDSSEL (data select), and IRDATA (data) bits. For more information, see the SYS chapter in the *MSP430FR4xx and MSP430FR2xx Family User's Guide*.

The Timer_B module feature the function to put Timer_B all outputs into a high impedance state when the selected source is triggered. The source can be selected from external pin or internal of the device, it is controlled by TBxTRG in SYS. For more information, see the SYS chapter in the *MSP430FR4xx and MSP430FR2xx Family User's Guide*.

The Timer2_B3 CCR0 is tied with the Manchester function module (MFM).

表 6-20 lists the Timer_B high-impedance trigger sources.

表 6-20. TBxOUTH

TBxTRGSEL	TBxOUTH TRIGGER SOURCE SELECTION	TIMER_B PAD OUTPUT HIGH IMPEDANCE
TB0TRGSEL = 0	eCOMP0 output (internal)	P1.6, P1.7
TB0TRGSEL= 1	P1.2	
TB1TRGSEL = 0	eCOMP0 output (internal)	P2.0, P2.1
TB1TRGSEL = 1	P2.3	
TB2TRGSEL = 0	eCOMP1 output (internal)	P5.0, P5.1
TB2TRGSEL = 1	P5.3	
TB3TRGSEL = 0	eCOMP1 output (internal)	P6.0, P6.1, P6.2, P6.3, P6.4, P6.5
TB3TRGSEL = 1	N/A	

6.10.10 Backup Memory (BKMEM)

The BKMEM supports data retention functionality during LPM3.5 mode. This device provides up to 32 bytes that are retained during LPM3.5.

6.10.11 Real-Time Clock (RTC) Counter

The RTC counter is a 16-bit modulo counter that is functional in AM, LPM0, LPM3, LPM4, and LPM3.5. This module can periodically wake up the CPU from LPM0, LPM3, LPM4, and LPM3.5 based on timing from a low-power clock source such as the XT1, ACLK, and VLO clocks. In AM, RTC can be driven by SMCLK to generate high-frequency timing events and interrupts. ACLK and SMCLK both can source to the RTC; however, only one of them can be selected at a time. The RTC overflow events can trigger:

- Timer0_B3 CCI0A
- ADC conversion trigger when ADCSHSx bits are set as 01b

版权 © 2018–2019, Texas Instruments Incorporated

6.10.12 12-Bit Analog-to-Digital Converter (ADC)

The 12-bit ADC module supports fast 12-bit analog-to-digital conversions with single-ended input. The module implements a 12-bit SAR core, sample select control, reference generator and a conversion result buffer. A window comparator with a lower and upper limits allows CPU-independent result monitoring with three window comparator interrupt flags.

The ADC supports 12 external inputs and four internal inputs (see 表 6-21).

表 6-21. ADC Channel Connections

ADCINCHx	ADC CHANNELS	EXTERNAL PIN OUTPUT
0	A0/Veref+	P1.0
1	A1/	P1.1
2	A2/Veref-	P1.2
3	A3	P1.3
4	A4	P1.4
5	A5	P1.5
6	A6	P1.6
7	A7(1)	P1.7
8	A8	P5.0
9	A9	P5.1
10	A10	P5.2
11	A11	P5.3
12	On-chip temperature sensor	N/A
13	Internal shared reference voltage (1.5 V, 2.0 V, or 2.5 V)	N/A
14	DVSS	N/A
15	DVCC	N/A

(1) When A7 is used, the PMM 1.2-V reference voltage can be output to this pin by setting the PMM control register. The 1.2-V voltage can be measured by channel A7.

The analog-to-digital conversion can be started by software or a hardware trigger. 表 6-22 lists the trigger sources that are available.

表 6-22. ADC Trigger Signal Connections

ADCSHSx		TRIGGER SOURCE
BINARY	DECIMAL	
00	0	ADCSC bit (software trigger)
01	1	RTC event
10	2	TB1.1B
11	3	eCOMP0 COUT

6.10.13 Enhanced Comparator

This device features two enhanced comparators: eCOMP0 and eCOMP1. The enhanced comparator is an analog voltage comparator with a built-in 6-bit DAC as an internal voltage reference. The integrated 6-bit DAC can be set to 64 steps for the comparator reference voltage. This module has 4-level programmable hysteresis and configurable power modes: high-power mode or low-power mode.

The eCOMP0 supports a propagation delay up to 1 µs in high-power mode. In low-power mode, eCOMP0 supports 3.2-µs delay with 1.5-µA leakage at room temperature, which can be an ideal wake-up source in LPM3 for a voltage monitor.

The eCOMP1 supports a propagation delay up to 100 ns in high-power mode. In low-power mode, eCOMP1 supports 320-ns delay with 10-µA leakage at room temperature.

Both eCOMP0 and eCOMP1 contains a programmable 6-bit DAC that can use internal shared reference (1.5, 2.0, or 2.5-V) for high precision comparison threshold. In addition to internal shared reference, a low-power 1.2-V reference is fixed at channel 2 of both inverting and non-inverting path that allows the DAC turned off for saving powers.

The eCOMP0 supports external inputs and internal inputs (see 表 6-23) and outputs (see 表 6-25)

表 6-23. eCOMP0 Input Channel Connections

CPPSEL	eCOMP0 CHANNELS	CPNSEL	eCOMP0 CHANNELS
000	P1.0/COMP0.0/A0	000	P1.0/COMP0.0/A0
001	P1.1/OA0O/COMP0.1/A1	001	P1.1/OA0O/COMP0.1/A1
010	Low-power 1.2-V reference	010	Low-power 1.2-V reference
011	N/A	011	N/A
100	N/A	100	N/A
101	P1.1/OA0O/COMP0.1/A1	101	P3.1/OA2O
110	eCOMP0 6-bit DAC	110	eCOMP0 6-bit DAC

表 6-24. eCOMP1 Input Channel Connections

CPPSEL	eCOMP1 CHANNELS	CPNSEL	eCOMP1 CHANNELS
000	P2.5/COMP1.0	000	P2.5/COMP1.0
001	P2.4/COMP1.1	001	P2.4/COMP1.1
010	Low-power 1.2-V reference	010	Low-power 1.2-V reference
011	N/A	011	N/A
100	N/A	100	N/A
101	P1.5/OA1O/A5	101	P3.5/OA3O
110	eCOMP1 6-bit DAC	110	eCOMP1 6-bit DAC

表 6-25. eCOMP0 Output Channel Connections

ECOMP0 OUT	EXTERNAL PINOUT, MODULE
1	P2.0
2	TB0.1B, TB0 (TB0OUTH), TB1 (TB1OUTH), ADC trigger
3	Reserved
4	Reserved

版权 © 2018–2019, Texas Instruments Incorporated

表 6-26. eCOMP1 Output Channel Connections

ECOMP1 OUT	EXTERNAL PINOUT, MODULE
1	P2.1
2	TB2.1B, TB2 (TB2OUTH), TB3 (TB3OUTH)
3	Reserved
4	MFM input

6.10.14 Manchester Function Module (MFM)

The MFM is a dedicated module residing between a pair of pins and eUSCI_B1 to encode and decode Manchester-coded data. For more information, see the MFM chapter in the *MSP430FR4xx and MSP430FR2xx Family User's Guide*.

When enabled by setting PSEL, the MFM module receives and transmits data through P5.0/TB2.1/MFM.RX/A8 and P5.1/TB2.2/MFM.TX/A9, respectively. The MFM always works in SPI master mode, and the eUSCI_B1 must be configured in 4-wire SPI slave mode.

6.10.15 Smart Analog Combo (SAC) (MSP430FR235x Devices Only)

The MSP430FR235x devices integrate four SAC modules: SAC0, SAC1, SAC2, and SAC3. The SAC integrates a high-performance low-power operational amplifier. SAC-L3 supports a hybrid configuration of general-purpose amplifier, 12-bit voltage reference DAC, and a multiplex switch array. For more information, see the SAC chapter in the *MSP430FR4xx and MSP430FR2xx Family User's Guide*. Only MSP430FR235x devices implement the SAC modules. MSP430FR215x devices do not support SAC modules.

The SAC0 and SAC2 are interconnected and support external inputs and internal inputs (see 表 6-27 and 表 6-28).

表 6-27. SAC0 Channel Connections

PSEL	SAC0 OA NONINVERTING CHANNELS	NSEL	SAC0 OA INVERTING CHANNELS
00	P1.3/OA0+/A3	00	P1.2/OA0-/A2
01	SAC0 12-bit DAC	01	PGA feedback
10	P3.1/OA2O, SAC2 OA output	10	P3.1/OA2O, SAC2 OA output
11	N/A	11	N/A

表 6-28. SAC2 Channel Connections

PSEL	SAC2 OA NONINVERTING CHANNELS	NSEL	SAC2 OA INVERTING CHANNELS
00	P3.3/OA2+	00	P3.2/OA2-
01	SAC2 12-bit DAC	01	PGA feedback
10	P1.1/UCB0CLK/ACLK/OA0O/COMP0.1/A1, SAC0 OA output	10	P1.1/UCB0CLK/ACLK/OA0O/COMP0.1/A1, SAC0 OA output
11	N/A	11	N/A

The SAC1 and SAC3 are interconnected and support external inputs and internal inputs (see 表 6-29 and 表 6-30).

表 6-29. SAC1 Channel Connections

PSEL	SAC1 OA NONINVERTING CHANNELS	NSEL	SAC1 OA INVERTING CHANNELS
00	P1.7/OA1+/A7	00	P1.6/OA1-/A6
01	SAC1 12-bit DAC	01	PGA feedback
10	P3.5/OA3O, SAC3 OA output	10	P3.5/OA3O, SAC3 OA output
11	N/A	11	N/A

版权 © 2018–2019, Texas Instruments Incorporated

表 6-30. SAC3 Channel Connections

PSEL	SAC3 OA NONINVERTING CHANNELS	NSEL	SAC3 OA INVERTING CHANNELS
00	P3.7/OA3+	00	P3.6/OA3-
01	SAC3 12-bit DAC	01	PGA feedback
10	P1.5/OA1O/A5, SAC1 OA output	10	P1.5/OA1O/A5, SAC1 OA output
11	N/A	11	N/A

Each SAC DAC supports two selectable voltage references (see 表 6-31).

表 6-31. SACx DAC Reference Selection

DACSREF	SACx DAC REFERENCE SELECTION
0	DVCC
1	Internal shared reference (1.5, 2.0, or 2.5 V)
DACSREF	**SAC1 DAC REFERENCE**
0	DVCC
1	Internal shared reference (1.5, 2.0, or 2.5 V)
DACSREF	**SAC2 DAC REFERENCE**
0	DVCC
1	Internal shared reference (1.5, 2.0, or 2.5 V)
DACSREF	**SAC3 DAC REFERENCE**
0	DVCC
1	Internal shared reference (1.5, 2.0, or 2.5 V)

Each SAC DAC supports one software trigger and two hardware trigger from chip signals.

表 6-32. SACx DAC Hardware Trigger Selection

DACLSEL	SAC0 DAC HARDWARE TRIGGER	DACLSEL	SAC1 DAC HARDWARE TRIGGER
00	Writing SAC0DACDAT register	00	Writing SAC1DACDAT register
01	N/A	01	N/A
10	TB2.1	10	TB2.1
11	TB2.2	11	TB2.2
DACLSEL	**SAC2 DAC HARDWARE TRIGGER**	**DACLSEL**	**SAC3 DAC HARDWARE TRIGGER**
00	Writing SAC2DACDAT register	00	Writing SAC3DACDAT register
01	N/A	01	N/A
10	TB2.1	10	TB2.1
11	TB2.2	11	TB2.2

版权 © 2018–2019, Texas Instruments Incorporated

6.10.16 eCOMP0, eCOMP1, SAC0, SAC1, SAC2, and SAC3 Interconnection (MSP430FR235x Devices Only)

The high-performance analog modules of eCOMP0, SAC0, and SAC2 are internally connected (see 图 6-1).

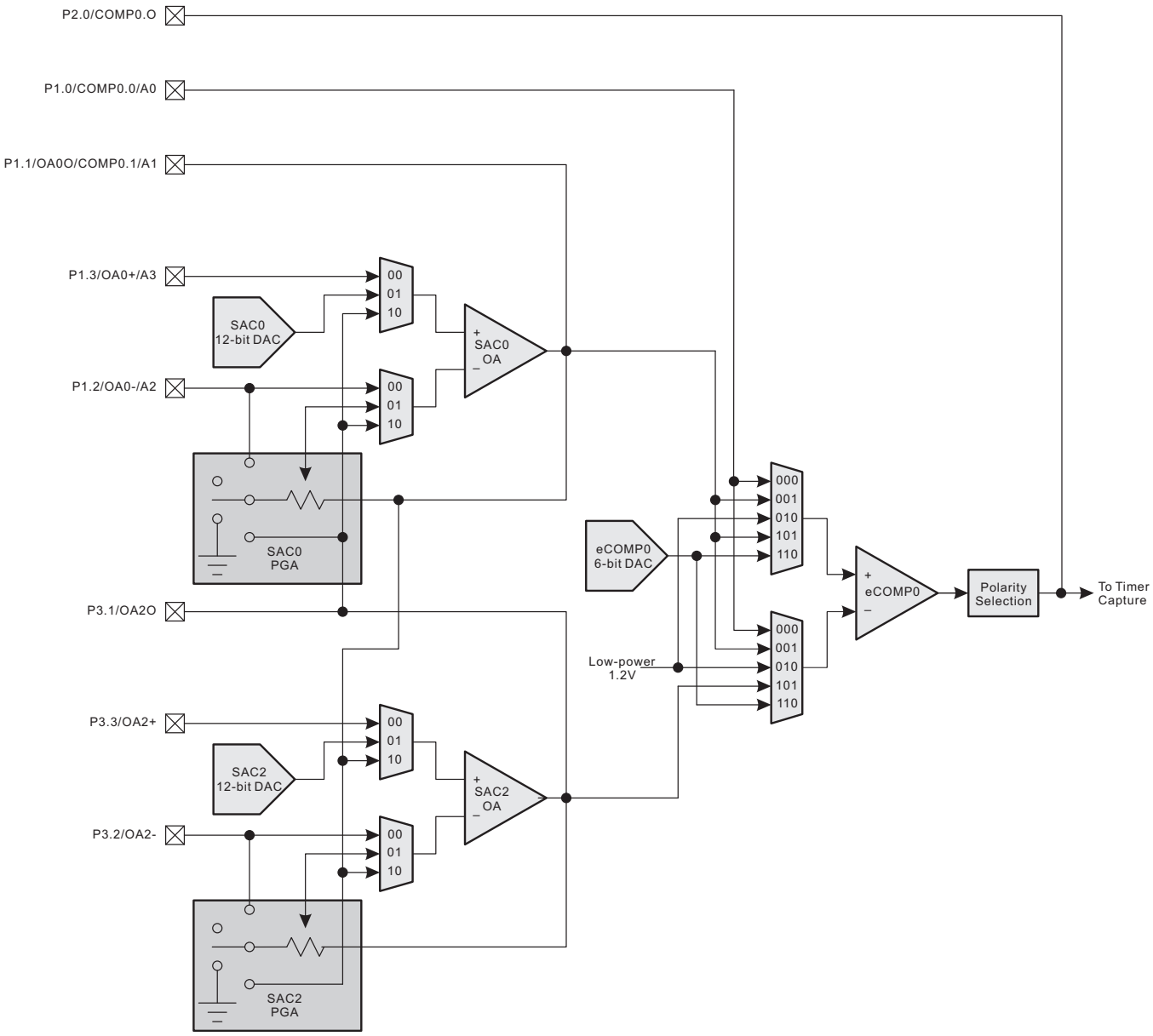

图 6-1. eCOMP0, SAC0, SAC2 Interconnection

The high-performance analog modules of eCOMP1, SAC1, and SAC3 are internally connected (see 图 6-2):

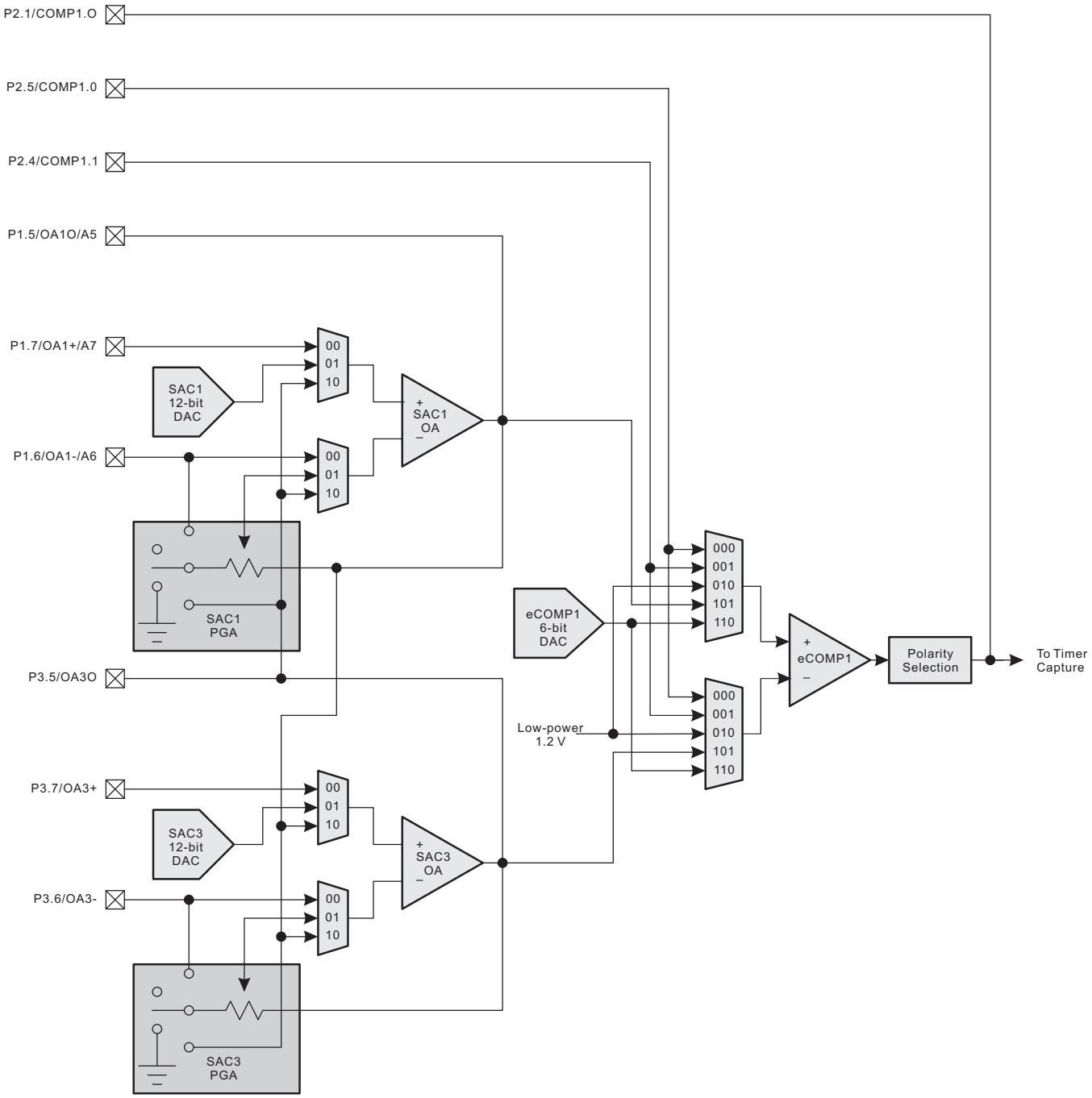

图 6-2. eCOMP1, SAC1, SAC3 Interconnection

版权 © 2018–2019, Texas Instruments Incorporated

6.10.17 Cross-Chip Interconnection (SACx are MSP430FR235x Devices Only)

This section describes the cross-chip interconnections in a full-featured view.

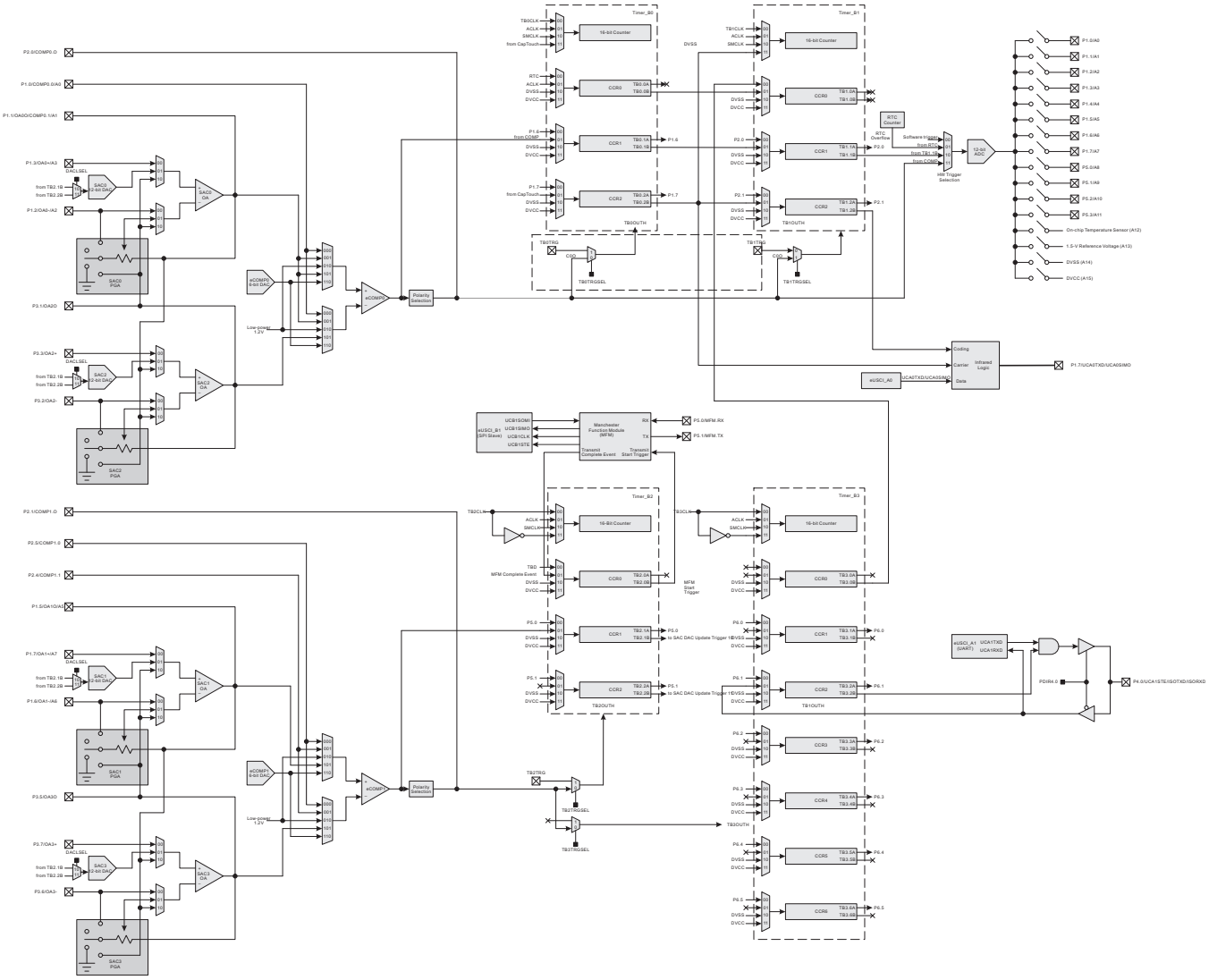

图 6-3. Cross-Chip Interconnection

6.10.18 Embedded Emulation Module (EEM)

The EEM supports real-time in-system debugging. The EEM on these devices has the following features:

- Three hardware triggers or breakpoints on memory access
- One hardware trigger or breakpoint on CPU register write access
- Up to four hardware triggers can be combined to form complex triggers or breakpoints
- One cycle counter
- Clock control on module level

6.10.19 Peripheral File Map

表 6-33 lists the base address and the memory size of each peripheral's registers.

表 6-33. Peripherals Summary

MODULE NAME	BASE ADDRESS	SIZE
Special Functions (see 表 6-34)	0100h	0010h
PMM (see 表 6-35)	0120h	0020h
SYS (see 表 6-36)	0140h	0040h
CS (see 表 6-37)	0180h	0020h
FRAM (see 表 6-38)	01A0h	0010h
CRC (see 表 6-39)	01C0h	0008h
WDT (see 表 6-40)	01CCh	0002h
Port P1, P2 (see 表 6-41)	0200h	0020h
Port P3, P4 (see 表 6-42)	0220h	0020h
Port P5, P6 (see 表 6-43)	0240h	0020h
RTC (see 表 6-44)	0300h	0010h
Timer0_B3 (see 表 6-45)	0380h	0030h
Timer1_B3 (see 表 6-46)	03C0h	0030h
Timer2_B3 (see 表 6-47)	0400h	0030h
Timer3_B7 (see 表 6-48)	0440h	0030h
MPY32 (see 表 6-49)	04C0h	0030h
eUSCI_A0 (see 表 6-50)	0500h	0020h
eUSCI_B0 (see 表 6-51)	0540h	0030h
eUSCI_A1 (see 表 6-52)	0580h	0020h
eUSCI_B1 (see 表 6-53)	05C0h	0030h
Backup Memory (see 表 6-54)	0660h	0020h
ICC (see 表 6-55)	06C0h	0010h
ADC (see 表 6-56)	0700h	0040h
eCOMP0 (see 表 6-57)	08E0h	0020h
eCOMP1 (see 表 6-58)	0900h	0020h
SAC0 (see 表 6-59)(1)	0C80h	0010h
SAC1 (see 表 6-60)(1)	0C90h	0010h
SAC2 (see 表 6-61)(1)	0CA0h	0010h
SAC3 (see 表 6-62)(1)	0CB0h	0010h

(1) MSP430FR235x devices only

版权 © 2018–2019, Texas Instruments Incorporated

表 **6-34. Special Function Registers (Base Address: 0100h)**

REGISTER DESCRIPTION	ACRONYM	OFFSET
SFR interrupt enable	SFRIE1	00h
SFR interrupt flag	SFRIFG1	02h
SFR reset pin control	SFRRPCR	04h

表 **6-35. PMM Registers (Base Address: 0120h)**

REGISTER DESCRIPTION	ACRONYM	OFFSET
PMM control 0	PMMCTL0	00h
PMM control 1	PMMCTL1	02h
PMM control 2	PMMCTL2	04h
PMM interrupt flags	PMMIFG	0Ah
PM5 control 0	PM5CTL0	10h

表 **6-36. SYS Registers (Base Address: 0140h)**

REGISTER DESCRIPTION	ACRONYM	OFFSET
System control	SYSCTL	00h
Bootloader configuration area	SYSBSLC	02h
JTAG mailbox control	SYSJMBC	06h
JTAG mailbox input 0	SYSJMBI0	08h
JTAG mailbox input 1	SYSJMBI1	0Ah
JTAG mailbox output 0	SYSJMBO0	0Ch
JTAG mailbox output 1	SYSJMBO1	0Eh
User NMI vector generator	SYSUNIV	1Ah
System NMI vector generator	SYSSNIV	1Ch
Reset vector generator	SYSRSTIV	1Eh
System configuration 0	SYSCFG0	20h
System configuration 1	SYSCFG1	22h
System configuration 2	SYSCFG2	24h
System configuration 3	SYSCFG3	26h

表 **6-37. CS Registers (Base Address: 0180h)**

REGISTER DESCRIPTION	ACRONYM	OFFSET
CS control 0	CSCTL0	00h
CS control 1	CSCTL1	02h
CS control 2	CSCTL2	04h
CS control 3	CSCTL3	06h
CS control 4	CSCTL4	08h
CS control 5	CSCTL5	0Ah
CS control 6	CSCTL6	0Ch
CS control 7	CSCTL7	0Eh
CS control 8	CSCTL8	10h

版权 © 2018–2019, Texas Instruments Incorporated

表 6-38. FRAM Registers (Base Address: 01A0h)

REGISTER DESCRIPTION	ACRONYM	OFFSET
FRAM control 0	FRCTL0	00h
General control 0	GCCTL0	04h
General control 1	GCCTL1	06h

表 6-39. CRC Registers (Base Address: 01C0h)

REGISTER DESCRIPTION	ACRONYM	OFFSET
CRC data input	CRC16DI	00h
CRC data input reverse byte	CRCDIRB	02h
CRC initialization and result	CRCINIRES	04h
CRC result reverse byte	CRCRESR	06h

表 6-40. WDT Registers (Base Address: 01CCh)

REGISTER DESCRIPTION	ACRONYM	OFFSET
Watchdog timer control	WDTCTL	00h

表 6-41. Port P1, P2 Registers (Base Address: 0200h)

REGISTER DESCRIPTION	ACRONYM	OFFSET
Port P1 input	P1IN	00h
Port P1 output	P1OUT	02h
Port P1 direction	P1DIR	04h
Port P1 pulling enable	P1REN	06h
Port P1 selection 0	P1SEL0	0Ah
Port P1 selection 1	P1SEL1	0Ch
Port P1 interrupt vector word	P1IV	0Eh
Port P1 complement selection	P1SELC	16h
Port P1 interrupt edge select	P1IES	18h
Port P1 interrupt enable	P1IE	1Ah
Port P1 interrupt flag	P1IFG	1Ch
Port P2 input	P2IN	01h
Port P2 output	P2OUT	03h
Port P2 direction	P2DIR	05h
Port P2 pulling enable	P2REN	07h
Port P2 selection 0	P2SEL0	0Bh
Port P2 selection 1	P2SEL1	0Dh
Port P2 interrupt vector word	P2IV	1Eh
Port P2 complement selection	P2SELC	17h
Port P2 interrupt edge select	P2IES	19h
Port P2 interrupt enable	P2IE	1Bh
Port P2 interrupt flag	P2IFG	1Dh

版权 © 2018–2019, Texas Instruments Incorporated

表 **6-42. Port P3, P4 Registers (Base Address: 0220h)**

REGISTER DESCRIPTION	ACRONYM	OFFSET
Port P3 input	P3IN	00h
Port P3 output	P3OUT	02h
Port P3 direction	P3DIR	04h
Port P3 pulling enable	P3REN	06h
Port P3 selection 0	P3SEL0	0Ah
Port P3 selection 1	P3SEL1	0Ch
Port P3 interrupt vector word	P3IV	0Eh
Port P3 complement selection	P3SELC	16h
Port P3 interrupt edge select	P3IES	18h
Port P3 interrupt enable	P3IE	1Ah
Port P3 interrupt flag	P3IFG	1Ch
Port P4 input	P4IN	01h
Port P4 output	P4OUT	03h
Port P4 direction	P4DIR	05h
Port P4 pulling enable	P4REN	07h
Port P4 selection 0	P4SEL0	0Bh
Port P4 selection 1	P4SEL1	0Dh
Port P4 interrupt vector word	P4IV	1Eh
Port P4 complement selection	P4SELC	17h
Port P4 interrupt edge select	P4IES	19h
Port P4 interrupt enable	P4IE	1Bh
Port P4 interrupt flag	P4IFG	1Dh

表 **6-43. Port P5, P6 Registers (Base Address: 0240h)**

REGISTER DESCRIPTION	ACRONYM	OFFSET
Port P5 input	P5IN	00h
Port P5 output	P5OUT	02h
Port P5 direction	P5DIR	04h
Port P5 pulling enable	P5REN	06h
Port P5 selection 0	P5SEL0	0Ah
Port P5 selection 1	P5SEL1	0Ch
Port P5 complement selection	P5SELC	16h
Port P6 input	P6IN	01h
Port P6 output	P6OUT	03h
Port P6 direction	P6DIR	05h
Port P6 pulling enable	P6REN	07h
Port P6 selection 0	P6SEL0	0Bh
Port P6 selection 1	P6SEL1	0Dh
Port P6 complement selection	P6SELC	17h

表 **6-44. RTC Registers (Base Address: 0300h)**

REGISTER DESCRIPTION	ACRONYM	OFFSET
RTC control	RTCCTL	00h
RTC interrupt vector	RTCIV	04h
RTC modulo	RTCMOD	08h
RTC counter	RTCCNT	0Ch

版权 © 2018–2019, Texas Instruments Incorporated

表 6-45. Timer0_B3 Registers (Base Address: 0380h)

REGISTER DESCRIPTION	ACRONYM	OFFSET
TB0 control	TB0CTL	00h
Capture/compare control 0	TB0CCTL0	02h
Capture/compare control 1	TB0CCTL1	04h
Capture/compare control 2	TB0CCTL2	06h
TB0 counter	TB0R	10h
Capture/compare 0	TB0CCR0	12h
Capture/compare 1	TB0CCR1	14h
Capture/compare 2	TB0CCR2	16h
TB0 expansion 0	TB0EX0	20h
TB0 interrupt vector	TB0IV	2Eh

表 6-46. Timer1_B3 Registers (Base Address: 03C0h)

REGISTER DESCRIPTION	ACRONYM	OFFSET
TB1 control	TB1CTL	00h
Capture/compare control 0	TB1CCTL0	02h
Capture/compare control 1	TB1CCTL1	04h
Capture/compare control 2	TB1CCTL2	06h
TB1 counter	TB1R	10h
Capture/compare 0	TB1CCR0	12h
Capture/compare 1	TB1CCR1	14h
Capture/compare 2	TB1CCR2	16h
TB1 expansion 0	TB1EX0	20h
TB1 interrupt vector	TB1IV	2Eh

表 6-47. Timer2_B3 Registers (Base Address: 0400h)

REGISTER DESCRIPTION	ACRONYM	OFFSET
TB2 control	TB2CTL	00h
Capture/compare control 0	TB2CCTL0	02h
Capture/compare control 1	TB2CCTL1	04h
Capture/compare control 2	TB2CCTL2	06h
TB2 counter	TB2R	10h
Capture/compare 0	TB2CCR0	12h
Capture/compare 1	TB2CCR1	14h
Capture/compare 2	TB2CCR2	16h
TB2 expansion 0	TB2EX0	20h
TB2 interrupt vector	TB2IV	2Eh

版权 © 2018–2019, Texas Instruments Incorporated

表 **6-48. Timer3_B7 Registers (Base Address: 0440h)**

REGISTER DESCRIPTION	ACRONYM	OFFSET
TB3 control	TB3CTL	00h
Capture/compare control 0	TB3CCTL0	02h
Capture/compare control 1	TB3CCTL1	04h
Capture/compare control 2	TB3CCTL2	06h
Capture/compare control 3	TB3CCTL3	08h
Capture/compare control 4	TB3CCTL4	0Ah
Capture/compare control 5	TB3CCTL5	0Ch
Capture/compare control 6	TB3CCTL6	0Eh
TB3 counter	TB3R	10h
Capture/compare 0	TB3CCR0	12h
Capture/compare 1	TB3CCR1	14h
Capture/compare 2	TB3CCR2	16h
Capture/compare 3	TB3CCR3	18h
Capture/compare 4	TB3CCR4	1Ah
Capture/compare 5	TB3CCR5	1Ch
Capture/compare 6	TB3CCR6	1Eh
TB3 expansion 0	TB3EX0	20h
TB3 interrupt vector	TB3IV	2Eh

表 **6-49. MPY32 Registers (Base Address: 04C0h)**

REGISTER DESCRIPTION	ACRONYM	OFFSET
16-bit operand 1 – multiply	MPY	00h
16-bit operand 1 – signed multiply	MPYS	02h
16-bit operand 1 – multiply accumulate	MAC	04h
16-bit operand 1 – signed multiply accumulate	MACS	06h
16-bit operand 2	OP2	08h
16 × 16 result low word	RESLO	0Ah
16 × 16 result high word	RESHI	0Ch
16 × 16 sum extension	SUMEXT	0Eh
32-bit operand 1 – multiply low word	MPY32L	10h
32-bit operand 1 – multiply high word	MPY32H	12h
32-bit operand 1 – signed multiply low word	MPYS32L	14h
32-bit operand 1 – signed multiply high word	MPYS32H	16h
32-bit operand 1 – multiply accumulate low word	MAC32L	18h
32-bit operand 1 – multiply accumulate high word	MAC32H	1Ah
32-bit operand 1 – signed multiply accumulate low word	MACS32L	1Ch
32-bit operand 1 – signed multiply accumulate high word	MACS32H	1Eh
32-bit operand 2 – low word	OP2L	20h
32-bit operand 2 – high word	OP2H	22h
32 × 32 result 0 – least significant word	RES0	24h
32 × 32 result 1	RES1	26h
32 × 32 result 2	RES2	28h
32 × 32 result 3 – most significant word	RES3	2Ah
MPY32 control 0	MPY32CTL0	2Ch

版权 © 2018–2019, Texas Instruments Incorporated

表 6-50. eUSCI_A0 Registers (Base Address: 0500h)

REGISTER DESCRIPTION	ACRONYM	OFFSET
eUSCI_A control word 0	UCA0CTLW0	00h
eUSCI_A control word 1	UCA0CTLW1	02h
eUSCI_A control rate 0	UCA0BR0	06h
eUSCI_A control rate 1	UCA0BR1	07h
eUSCI_A modulation control	UCA0MCTLW	08h
eUSCI_A status	UCA0STAT	0Ah
eUSCI_A receive buffer	UCA0RXBUF	0Ch
eUSCI_A transmit buffer	UCA0TXBUF	0Eh
eUSCI_A LIN control	UCA0ABCTL	10h
eUSCI_A IrDA transmit control	lUCA0IRTCTL	12h
eUSCI_A IrDA receive control	lUCA0IRRCTL	13h
eUSCI_A interrupt enable	UCA0IE	1Ah
eUSCI_A interrupt flags	UCA0IFG	1Ch
eUSCI_A interrupt vector word	UCA0IV	1Eh

表 6-51. eUSCI_B0 Registers (Base Address: 0540h)

REGISTER DESCRIPTION	ACRONYM	OFFSET
eUSCI_B control word 0	UCB0CTLW0	00h
eUSCI_B control word 1	UCB0CTLW1	02h
eUSCI_B bit rate 0	UCB0BR0	06h
eUSCI_B bit rate 1	UCB0BR1	07h
eUSCI_B status word	UCB0STATW	08h
eUSCI_B byte counter threshold	UCB0TBCNT	0Ah
eUSCI_B receive buffer	UCB0RXBUF	0Ch
eUSCI_B transmit buffer	UCB0TXBUF	0Eh
eUSCI_B I2C own address 0	UCB0I2COA0	14h
eUSCI_B I2C own address 1	UCB0I2COA1	16h
eUSCI_B I2C own address 2	UCB0I2COA2	18h
eUSCI_B I2C own address 3	UCB0I2COA3	1Ah
eUSCI_B receive address	UCB0ADDRX	1Ch
eUSCI_B address mask	UCB0ADDMASK	1Eh
eUSCI_B I2C slave address	UCB0I2CSA	20h
eUSCI_B interrupt enable	UCB0IE	2Ah
eUSCI_B interrupt flags	UCB0IFG	2Ch
eUSCI_B interrupt vector word	UCB0IV	2Eh

版权 © 2018–2019, Texas Instruments Incorporated

表 6-52. eUSCI_A1 Registers (Base Address: 0580h)

REGISTER DESCRIPTION	ACRONYM	OFFSET
eUSCI_A control word 0	UCA1CTLW0	00h
eUSCI_A control word 1	UCA1CTLW1	02h
eUSCI_A control rate 0	UCA1BR0	06h
eUSCI_A control rate 1	UCA1BR1	07h
eUSCI_A modulation control	UCA1MCTLW	08h
eUSCI_A status	UCA1STAT	0Ah
eUSCI_A receive buffer	UCA1RXBUF	0Ch
eUSCI_A transmit buffer	UCA1TXBUF	0Eh
eUSCI_A LIN control	UCA1ABCTL	10h
eUSCI_A IrDA transmit control	lUCA1IRTCTL	12h
eUSCI_A IrDA receive control	lUCA1IRRCTL	13h
eUSCI_A interrupt enable	UCA1IE	1Ah
eUSCI_A interrupt flags	UCA1IFG	1Ch
eUSCI_A interrupt vector word	UCA1IV	1Eh

表 6-53. eUSCI_B1 Registers (Base Address: 05C0h)

REGISTER DESCRIPTION	ACRONYM	OFFSET
eUSCI_B control word 0	UCB1CTLW0	00h
eUSCI_B control word 1	UCB1CTLW1	02h
eUSCI_B bit rate 0	UCB1BR0	06h
eUSCI_B bit rate 1	UCB1BR1	07h
eUSCI_B status word	UCB1STATW	08h
eUSCI_B byte counter threshold	UCB1TBCNT	0Ah
eUSCI_B receive buffer	UCB1RXBUF	0Ch
eUSCI_B transmit buffer	UCB1TXBUF	0Eh
eUSCI_B I2C own address 0	UCB1I2COA0	14h
eUSCI_B I2C own address 1	UCB1I2COA1	16h
eUSCI_B I2C own address 2	UCB1I2COA2	18h
eUSCI_B I2C own address 3	UCB1I2COA3	1Ah
eUSCI_B receive address	UCB1ADDRX	1Ch
eUSCI_B address mask	UCB1ADDMASK	1Eh
eUSCI_B I2C slave address	UCB1I2CSA	20h
eUSCI_B interrupt enable	UCB1IE	2Ah
eUSCI_B interrupt flags	UCB1IFG	2Ch
eUSCI_B interrupt vector word	UCB1IV	2Eh

版权 © 2018–2019, Texas Instruments Incorporated

表 6-54. Backup Memory Registers (Base Address: 0660h)

REGISTER DESCRIPTION	ACRONYM	OFFSET
Backup memory 0	BAKMEM0	00h
Backup memory 1	BAKMEM1	02h
Backup memory 2	BAKMEM2	04h
Backup memory 3	BAKMEM3	06h
Backup memory 4	BAKMEM4	08h
Backup memory 5	BAKMEM5	0Ah
Backup memory 6	BAKMEM6	0Ch
Backup memory 7	BAKMEM7	0Eh
Backup memory 8	BAKMEM8	10h
Backup memory 9	BAKMEM9	12h
Backup memory 10	BAKMEM10	14h
Backup memory 11	BAKMEM11	16h
Backup memory 12	BAKMEM12	18h
Backup memory 13	BAKMEM13	1Ah
Backup memory 14	BAKMEM14	1Ch
Backup memory 15	BAKMEM15	1Eh

表 6-55. ICC Registers (Base Address: 06C0h)

REGISTER DESCRIPTION	ACRONYM	OFFSET
ICC status and control	ICCSC	00h
ICC mask virtual stack	ICCMVS	02h
ICC interrupt level setting 0	ICCILSR0	04h
ICC interrupt level setting 1	ICCILSR1	06h
ICC interrupt level setting 2	ICCILSR2	08h
ICC interrupt level setting 3	ICCILSR3	0Ah

表 6-56. ADC Registers (Base Address: 0700h)

REGISTER DESCRIPTION	ACRONYM	OFFSET
ADC control 0	ADCCTL0	00h
ADC control 1	ADCCTL1	02h
ADC control 2	ADCCTL2	04h
ADC window comparator low threshold	ADCLO	06h
ADC window comparator high threshold	ADCHI	08h
ADC memory control 0	ADCMCTL0	0Ah
ADC conversion memory	ADCMEM0	12h
ADC interrupt enable	ADCIE	1Ah
ADC interrupt flags	ADCIFG	1Ch
ADC interrupt vector word	ADCIV	1Eh

版权 © 2018–2019, Texas Instruments Incorporated

表 6-57. eCOMP0 Registers (Base Address: 08E0h)

REGISTER DESCRIPTION	ACRONYM	OFFSET
Comparator control 0	CP0CTL0	00h
Comparator control 1	CP0CTL1	02h
Comparator interrupt	CP0INT	06h
Comparator interrupt vector	CP0IV	08h
Comparator built-in DAC control	CP0DACCTL	10h
Comparator built-in DAC data	CP0DACDATA	12h

表 6-58. eCOMP1 Registers (Base Address: 0900h)

REGISTER DESCRIPTION	ACRONYM	OFFSET
Comparator control 0	CP1CTL0	00h
Comparator control 1	CP1CTL1	02h
Comparator interrupt	CP1INT	06h
Comparator interrupt vector	CP1IV	08h
Comparator built-in DAC control	CP1DACCTL	10h
Comparator built-in DAC data	CP1DACDATA	12h

表 6-59. SAC0 Registers (Base Address: 0C80h, MSP430FR235x Devices Only)

REGISTER DESCRIPTION	ACRONYM	OFFSET
SAC0 OA control	SAC0OA	00h
SAC0 PGA control	SAC0PGA	02h
SAC0 DAC control	SAC0DAC	04h
SAC0 DAC data	SAC0DAT	06h
SAC0 DAC status	SAC0DATSTS	08h
SAC0 interrupt vector	SAC0IV	0Ah

表 6-60. SAC1 Registers (Base Address: 0C90h, MSP430FR235x Devices Only)

REGISTER DESCRIPTION	ACRONYM	OFFSET
SAC1 OA control	SAC1OA	00h
SAC1 PGA control	SAC1PGA	02h
SAC1 DAC control	SAC1DAC	04h
SAC1 DAC data	SAC1DAT	06h
SAC1 DAC status	SAC1DATSTS	08h
SAC1 interrupt vector	SAC1IV	0Ah

表 6-61. SAC2 Registers (Base Address: 0CA0h, MSP430FR235x Devices Only)

REGISTER DESCRIPTION	ACRONYM	OFFSET
SAC2 OA control	SAC2OA	00h
SAC2 PGA control	SAC2PGA	02h
SAC2 DAC control	SAC2DAC	04h
SAC2 DAC data	SAC2DAT	06h
SAC2 DAC status	SAC2DATSTS	08h
SAC2 interrupt vector	SAC2IV	0Ah

版权 © 2018–2019, Texas Instruments Incorporated

表 6-62. SAC3 Registers (Base Address: 0CB0h, MSP430FR235x Devices Only)

REGISTER DESCRIPTION	ACRONYM	OFFSET
SAC3 OA control	SAC3OA	00h
SAC3 PGA control	SAC3PGA	02h
SAC3 DAC control	SAC3DAC	04h
SAC3 DAC data	SAC3DAT	06h
SAC3 DAC status	SAC3DATSTS	08h
SAC3 interrupt vector	SAC3IV	0Ah

版权 © 2018–2019, Texas Instruments Incorporated

6.11 Input/Output Diagrams

6.11.1 Port P1 Input/Output With Schmitt Trigger

图 6-4 shows the port diagram. 表 6-63 summarizes the selection of the port function.

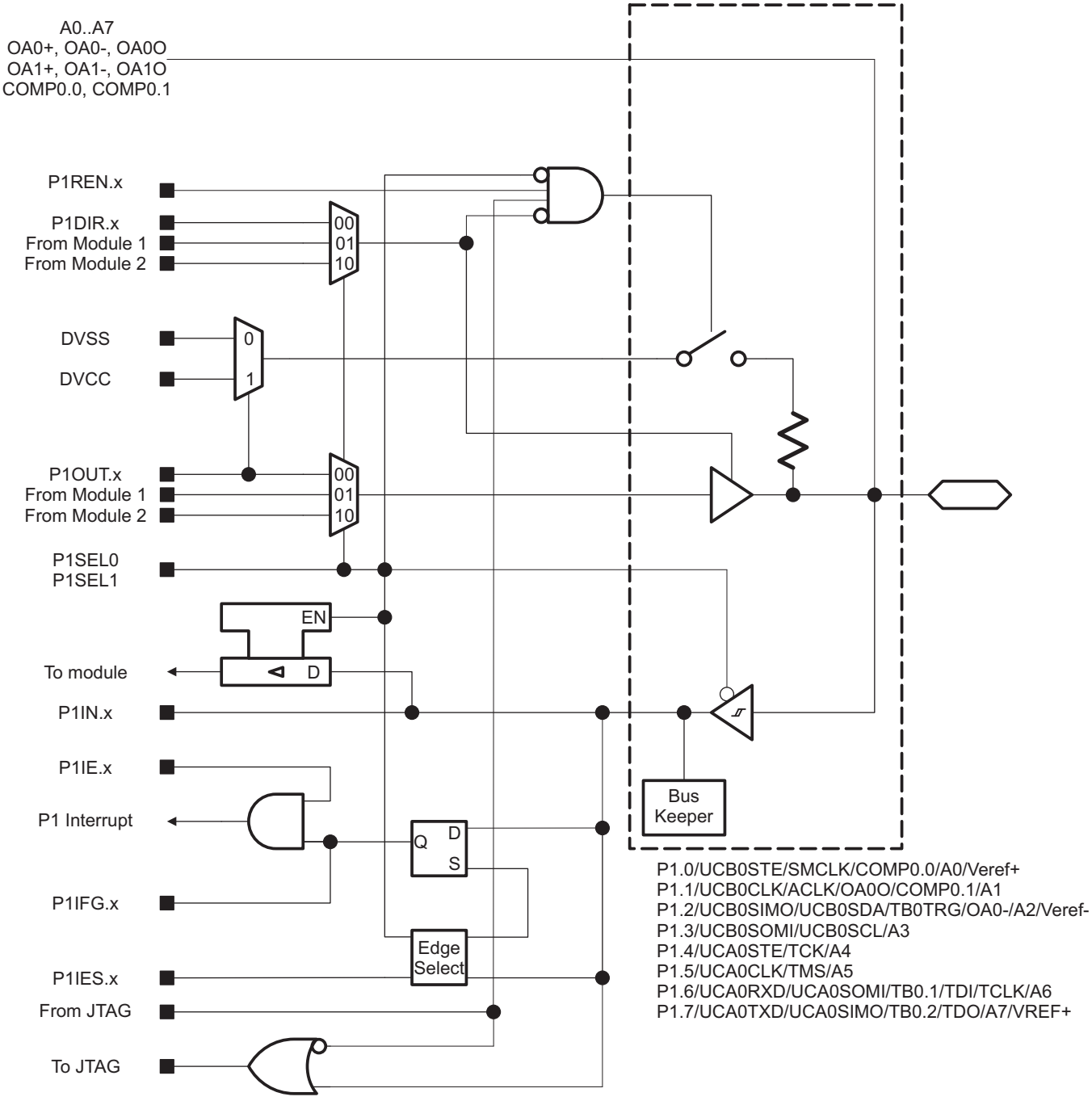

图 6-4. Port P1 Input/Output With Schmitt Trigger

表 6-63. Port P1 Pin Functions

PIN NAME (P1.x)	x	FUNCTION	CONTROL BITS AND SIGNALS(1)		
			P1DIR.x	P1SELx	JTAG
P1.0/UCB0STE/SMCLK/ COMP0.0/A0/Veref+	0	P1.0 (I/O)	I: 0; O: 1	00	N/A
		UCB0STE	X	01	N/A
		SMCLK	1	10	N/A
		VSS	0		
		COMP0.0, A0/Veref+	X	11	N/A
P1.1/UCB0CLK/ACLK/ OA0O/COMP0.1/A1	1	P1.1 (I/O)	I: 0; O: 1	0	N/A
		UCB0CLK	X	01	N/A
		ACLK	1	10	N/A
		VSS	0		
		OA0O(2), COMP0.1, A1	X	11	N/A
P1.2/UCB0SIMO/ UCB0SDA/TB0TRG/ OA0-/A2/Veref-	2	P1.2 (I/O)	I: 0; O: 1	00	N/A
		UCB0SIMO/UCB0SDA	X	01	N/A
		TB0TRG	0	10	N/A
		OA0-(2), A2/Veref-	X	11	N/A
P1.3/UCB0SOMI/ UCB0SCL/OA0+/A3	3	P1.3 (I/O)	I: 0; O: 1	00	N/A
		UCB0SOMI/UCB0SCL	X	01	N/A
		OA0+(2), A3	X	11	N/A
P1.4/UCA0STE/TCK/A4	4	P1.4 (I/O)	I: 0; O: 1	00	Disabled
		UCA0STE	X	01	Disabled
		A4	X	11	Disabled
		JTAG TCK	X	X	TCK
P1.5/UCA0CLK/TMS/ OA1O/A5	5	P1.5 (I/O)	I: 0; O: 1	00	Disabled
		UCA0CLK	X	01	Disabled
		OA1O(2), A5	X	11	Disabled
		JTAG TMS	X	X	TMS
P1.6/UCA0RXD/ UCA0SOMI/TB0.1/TDI/ TCLK/OA1-/A6	6	P1.6 (I/O)	I: 0; O: 1	00	Disabled
		UCA0RXD/UCA0SOMI	X	01	Disabled
		TB0.CCI1A	0	10	Disabled
		TB0.1	1		
		OA1-(2), A6	X	11	Disabled
		JTAG TDI/TCLK	X	X	TDI/TCLK
P1.7/UCA0TXD/ UCA0SIMO/TB0.2/TDO/ OA1+/A7/VREF+	7	P1.7 (I/O)	I: 0; O: 1	00	Disabled
		UCA0TXD/UCA0SIMO	X	01	Disabled
		TB0.CCI2A	0	10	Disabled
		TB0.2	1		
		OA1+(2), A7, VREF+	X	11	Disabled
		JTAG TDO	X	X	TDO

(1) X = don't care
(2) MSP430FR235x devices only

版权 © 2018–2019, Texas Instruments Incorporated

6.11.2 Port P2 Input/Output With Schmitt Trigger

图 6-5 shows the port diagram. 表 6-64 summarizes the selection of the port function.

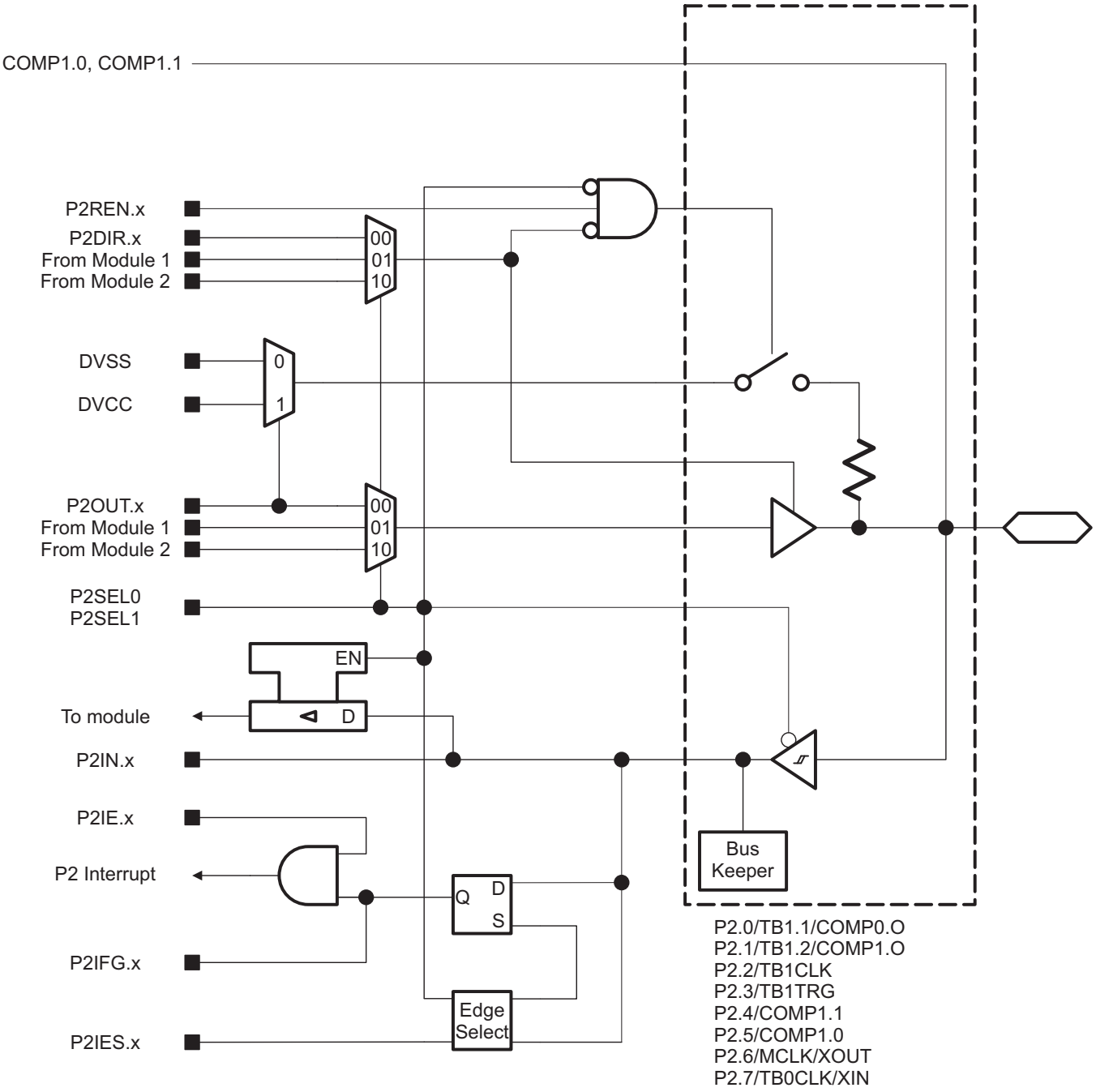

图 6-5. Port P2 Input/Output With Schmitt Trigger

表 6-64. Port P2 Pin Functions

PIN NAME (P2.x)	x	FUNCTION	CONTROL BITS AND SIGNALS(1)	
			P2DIR.x	P2SELx
P2.0/TB1.1/COMP0.O	0	P2.0 (I/O)	I: 0; O: 1	00
		TB1.CCI1A	0	01
		TB1.1	1	
		COMP0.O	1	10
P2.1/TB1.2	1	P2.1 (I/O)0	I: 0; O: 1	00
		TB1.CCI2A	0	01
		TB1.2	1	
		COMP1.O	1	10
P2.2/TB1CLK	2	P2.2 (I/O)	I: 0; O: 1	00
		TB1CLK	0	01
P2.3/UCB0CLK/TB1TRG	3	P2.3 (I/O)	I: 0; O: 1	00
		TB1TRG	0	01
		VSS	1	
P2.4/COMP1.1	4	P2.4 (I/O)	I: 0; O: 1	00
		COMP1.1	X	11
P2.5/COMP1.0	5	P2.5 (I/O)	I: 0; O: 1	00
		COMP1.0	X	11
P2.6/MCLK/XOUT	6	P2.6 (I/O)	I: 0; O: 1	00
		MCLK	1	01
		VSS	0	
		XOUT	X	10
P2.7/TB0CLK/XIN	7	P2.7 (I/O)	I: 0; O: 1	00
		TB0CLK	0	01
		VSS	1	
		XIN	X	10

(1) X = don't care

版权 © 2018–2019, Texas Instruments Incorporated

6.11.3 Port P3 Input/Output With Schmitt Trigger

图 6-6 shows the port diagram. 表 6-65 summarizes the selection of the port function.

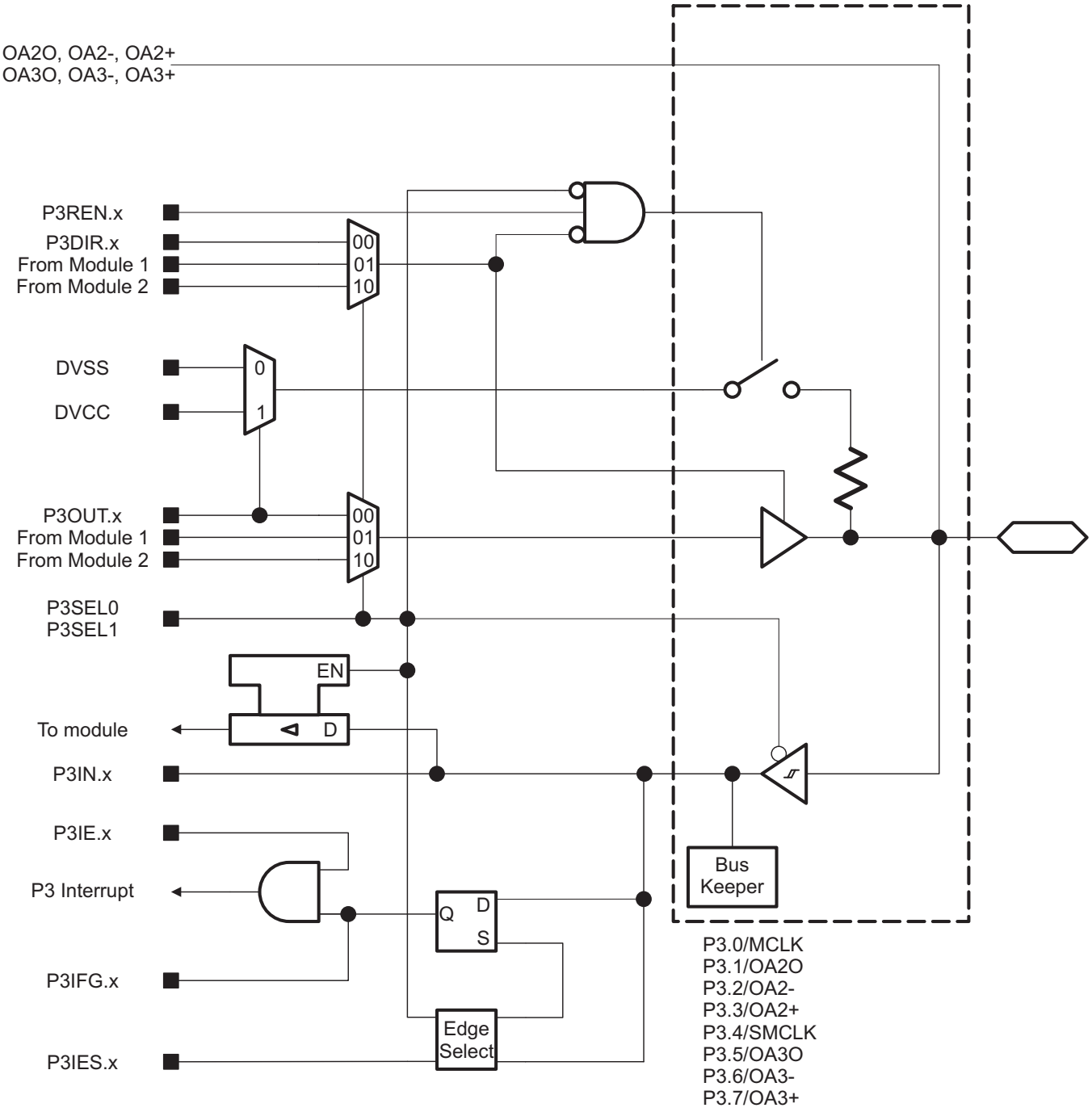

图 6-6. Port P3 Input/Output With Schmitt Trigger

表 6-65. Port P3 Pin Functions

PIN NAME (P3.x)	x	FUNCTION	CONTROL BITS AND SIGNALS(1)	
			P3DIR.x	P3SELx
P3.0/MCLK	0	P3.0 (I/O)	I: 0; O: 1	00
		MCLK	1	01
		VSS	0	
P3.1/OA2O	1	P3.1 (I/O)	I: 0; O: 1	00
		OA2O(2)	X	11
P3.2/OA2-	2	P3.2 (I/O)	I: 0; O: 1	00
		OA2-(2)	X	11
P3.3/OA2+	3	P3.3 (I/O)	I: 0; O: 1	00
		OA2+(2)	X	11
P3.4/SMCLK	4	P3.4 (I/O)	I: 0; O: 1	00
		SMCLK	1	01
		VSS	0	
P3.5/OA3O	5	P3.5 (I/O)	I: 0; O: 1	00
		OA3O(2)	X	11
P3.6/OA3-	6	P3.6 (I/O)	I: 0; O: 1	00
		OA3-(2)	X	11
P3.7/OA3+	7	P3.7 (I/O)	I: 0; O: 1	00
		OA3+(2)	X	11

(1) X = don't care
(2) MSP430FR235x devices only

版权 © 2018–2019, Texas Instruments Incorporated

6.11.4 Port P4 Input/Output With Schmitt Trigger

图 6-7 shows the port diagram. 表 6-66 summarizes the selection of the port function.

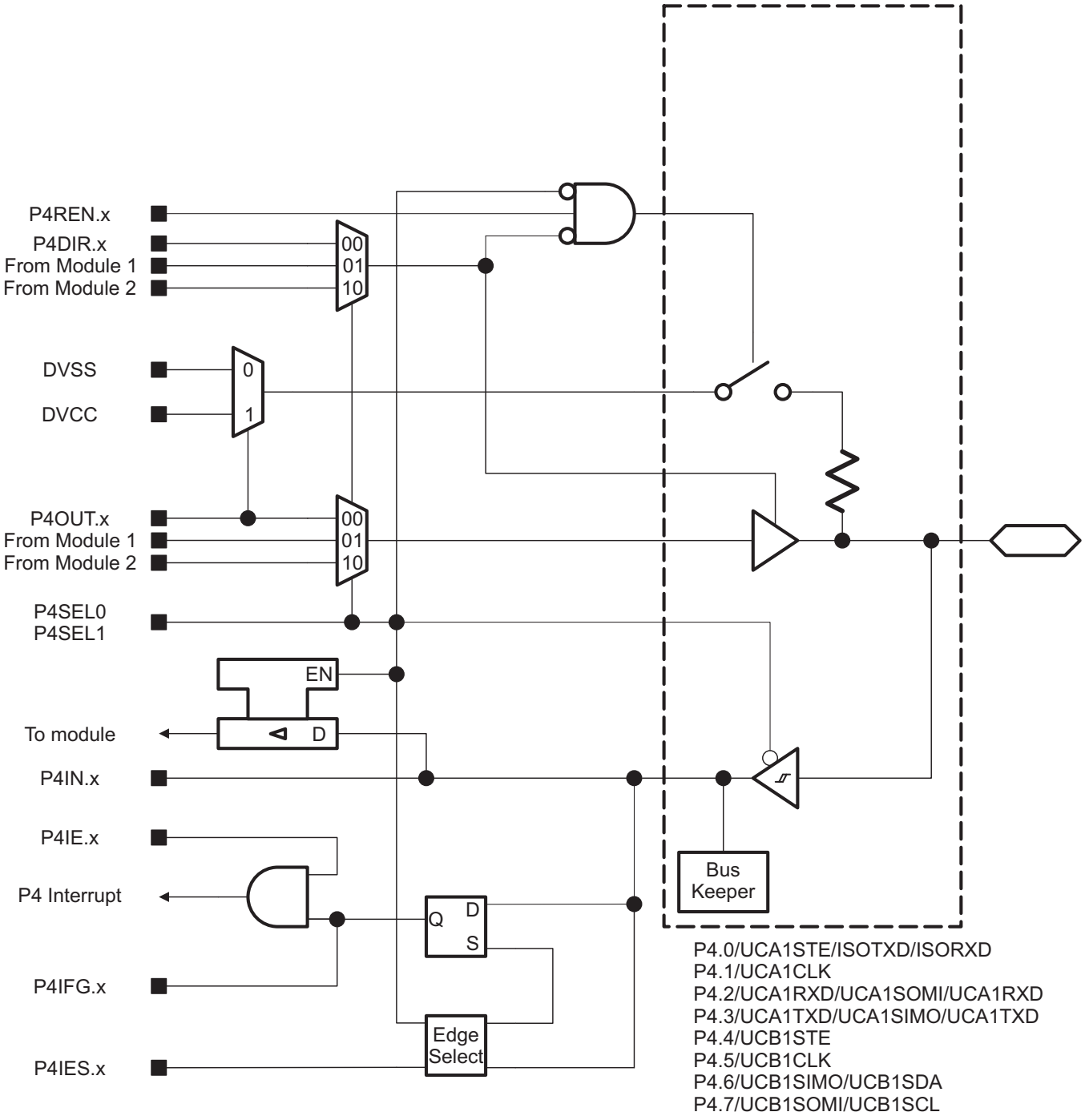

图 6-7. Port P4 Input/Output With Schmitt Trigger

表 6-66. Port P4 Pin Functions

PIN NAME (P4.x)	x	FUNCTION	CONTROL BITS AND SIGNALS(1)	
			P4DIR.x	P4SELx
P4.0/UCA1STE	0	P4.0 (I/O)	I: 0; O: 1	00
		UCA1STE	X	01
		UCA1RXD, TB3.CCI2B	0	10
		UCA1TXD logic-AND TB3.2B	1	
P4.1/UCA1CLK	1	P4.1 (I/O)	I: 0; O: 1	00
		UCA1CLK	X	01
P4.2/UCA1RXD/ UCA1SOMI/$\overline{\text{UCA1RXD}}$	2	P4.2 (I/O)	I: 0; O: 1	00
		UCA1RXD/UCA1SOMI	X	01
		$\overline{\text{UCA1RXD}}$	X	10
P4.3/UCA1TXD/ UCA1SIMO/$\overline{\text{UCA1TXD}}$	3	P4.3 (I/O)	I: 0; O: 1	00
		UCA1TXD/UCA1SIMO	X	01
		$\overline{\text{UCA1TXD}}$	X	10
P4.4/UCB1STE	4	P4.4 (I/O)	I: 0; O: 1	00
		UCB1STE	X	01
P4.5/UCB1CLK	5	P4.5 (I/O)	I: 0; O: 1	00
		UCB1CLK	X	01
P4.6/UCB1SIMO/UCB1SDA	6	P4.6 (I/O)	I: 0; O: 1	00
		UCB1SIMO/UCB1SDA	X	01
P4.7/UCB1SOMI/UCB1SCL	7	P4.7 (I/O)	I: 0; O: 1	00
		UCB1SOMI/UCB1SCL	X	01

(1) X = don't care

版权 © 2018–2019, Texas Instruments Incorporated

6.11.5 Port P5 Input/Output With Schmitt Trigger

图 6-8 shows the port diagram. 表 6-67 summarizes the selection of the port function.

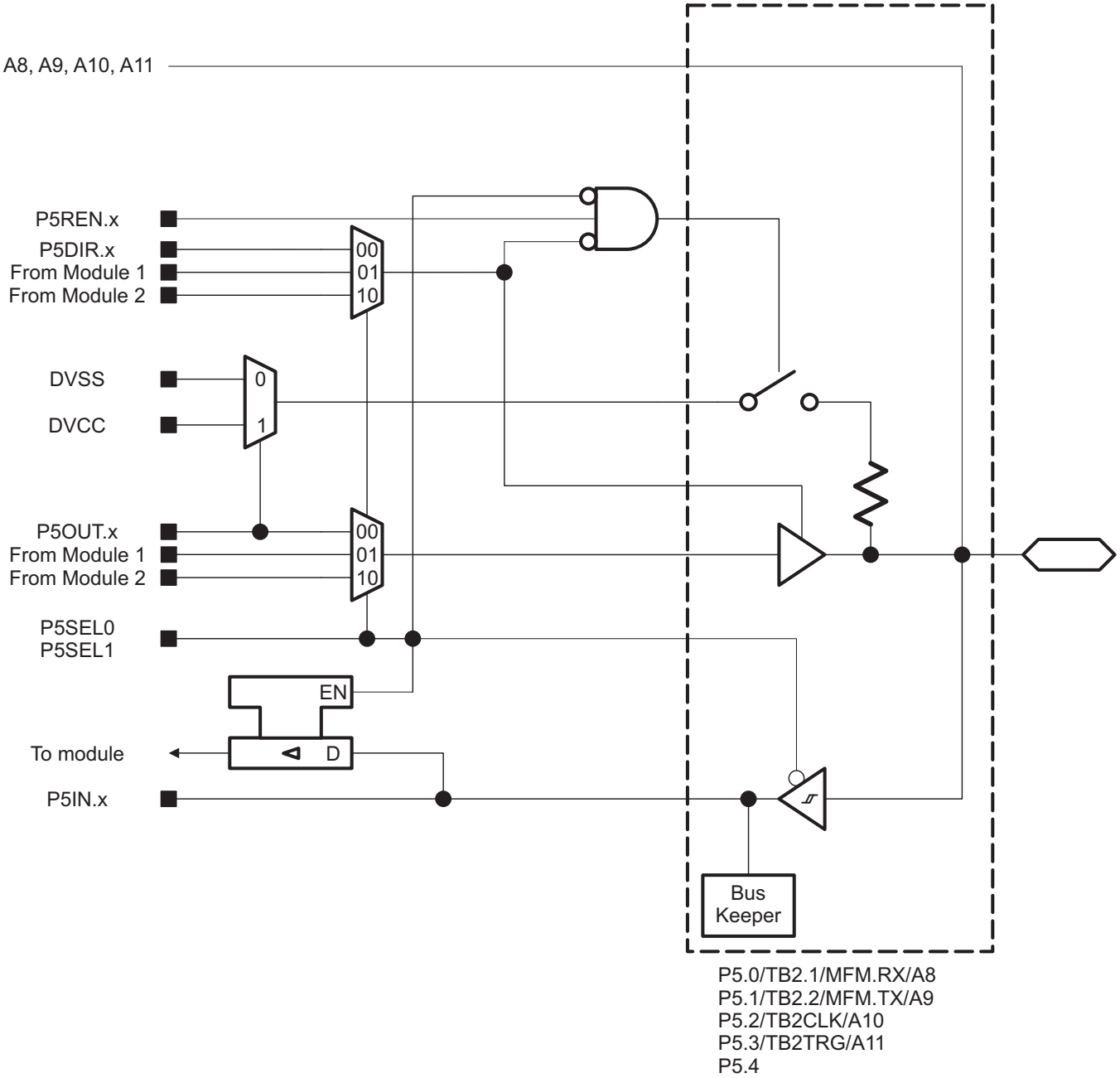

图 6-8. Port P5 Input/Output With Schmitt Trigger

表 6-67. Port P5 Pin Functions

PIN NAME (P5.x)	x	FUNCTION	CONTROL BITS AND SIGNALS(1)	
			P5DIR.x	P5SELx
P5.0/TB2.1/MFM.RX/A8	0	P5.0 (I/O)	I: 0; O: 1	00
		TB2.CCI1A	I	01
		TB2.1	O	
		MFM.RX	X	10
		A8	X	11
P5.1/TB2.2/MFM.TX/A9	1	P5.1 (I/O)	I: 0; O: 1	00
		TB2.CCI2A	I	01
		TB2.2	O	
		MFM.TX	X	10
		A9	X	11
P5.2/TB2CLK/A10	2	P5.2 (I/O)	I: 0; O: 1	00
		TB2CLK	I	01
		VSS	O	
		A10	X	11
P5.3/TB2TRG/A11	3	P5.3 (I/O)	I: 0; O: 1	00
		TB2TRG	I	01
		VSS	O	
		A11	X	11
P5.4	4	P5.4 (I/O)	I: 0; O: 1	00

(1) X = don't care

版权 © 2018–2019, Texas Instruments Incorporated

6.11.6 Port P6 Input/Output With Schmitt Trigger

图 6-9 shows the port diagram. 表 6-68 summarizes the selection of the port function.

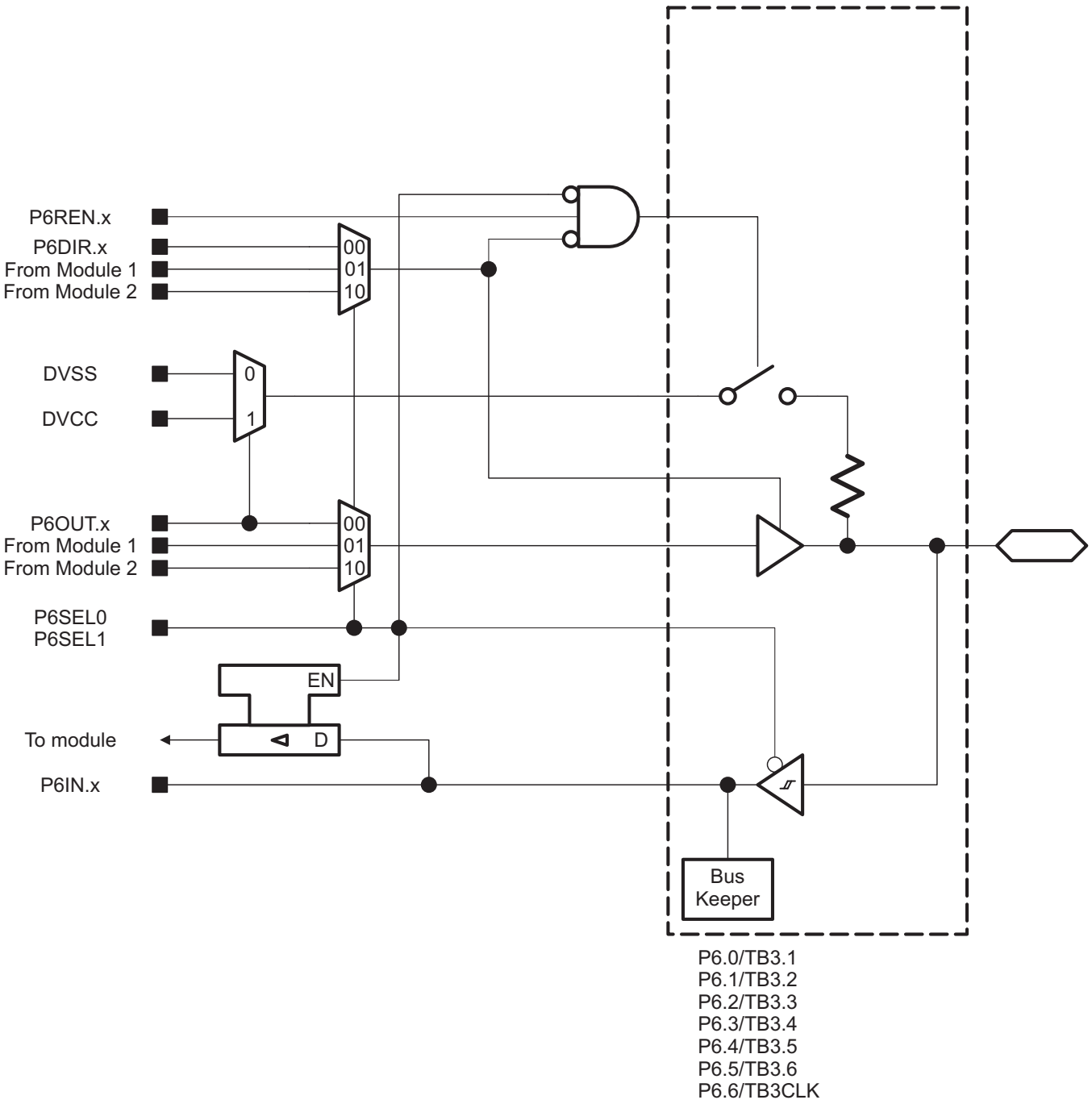

图 6-9. Port P6 Input/Output With Schmitt Trigger

表 6-68. Port P6 Pin Functions

PIN NAME (P6.x)	x	FUNCTION	CONTROL BITS AND SIGNALS(1)	
			P6DIR.x	P6SELx
P6.0/TB3.1	0	P6.0 (I/O)	I: 0; O: 1	00
		TB3.CCI1A	0	01
		TB3.1	1	
P6.1/TB3.2	1	P6.1 (I/O)	I: 0; O: 1	00
		TB3.CCI2A	0	01
		TB3.2	1	
P6.2/TB3.3	2	P6.2 (I/O)	I: 0; O: 1	00
		TB3.CCI3A	0	01
		TB3.3	1	
P6.3/TB3.4	3	P6.3 (I/O)	I: 0; O: 1	00
		TB3.CCI4A	0	01
		TB3.4	1	
P6.4/TB3.5	4	P6.4 (I/O)	I: 0; O: 1	00
		TB3.CCI5A	0	01
		TB3.5	1	
P6.5/TB3.6	5	P6.5 (I/O)	I: 0; O: 1	00
		TB3.CCI6A	0	01
		TB3.6	1	
P6.6/TB3CLK	6	P6.6 (I/O)	I: 0; O: 1	00
		TB3CLK	0	01
		VSS	1	

(1) X = don't care

版权 © 2018–2019, Texas Instruments Incorporated

6.12 Device Descriptors (TLV)

表 6-69 lists the Device IDs. 表 6-70 lists the contents of the device descriptor tag-length-value (TLV) structure.

表 6-69. Device IDs

DEVICE	DEVICE ID	
	1A04h	1A05h
MSP430FR2355	0C	83
MSP430FR2353	0D	83
MSP430FR2155	1E	83
MSP430FR2153	1D	83

表 6-70. Device Descriptors

DESCRIPTION		ADDRESS	VALUE
Information block	Info length	1A00h	06h
	CRC length	1A01h	06h
	CRC value(1)	1A02h	Per unit
		1A03h	Per unit
	Device ID	1A04h	See (2)
		1A05h	
	Hardware revision	1A06h	Per unit
	Firmware revision	1A07h	Per unit
Die record	Die record tag	1A08h	08h
	Die record length	1A09h	0Ah
	Lot wafer ID	1A0Ah	Per unit
		1A0Bh	Per unit
		1A0Ch	Per unit
		1A0Dh	Per unit
	Die X position	1A0Eh	Per unit
		1A0Fh	Per unit
	Die Y position	1A10h	Per unit
		1A11h	Per unit
	Test result	1A12h	Per unit
		1A13h	Per unit

(1) CRC value covers the checksum from 0x1A04h to 0x1AF7h by applying CRC-CCITT-16 polynomial of $x^{16} + x^{12} + x^5 + 1$
(2) MSP430FR235x devices only

表 6-70. Device Descriptors (continued)

DESCRIPTION		ADDRESS	VALUE
ADC calibration	ADC calibration tag	1A14h	11h
	ADC calibration length	1A15h	10h
	ADC gain factor	1A16h	Per unit
		1A17h	Per unit
	ADC offset	1A18h	Per unit
		1A19h	Per unit
	ADC internal shared 1.5-V reference, temperature 30°C	1A1Ah	Per unit
		1A1Bh	Per unit
	ADC internal shared 1.5-V reference, high temperature (3)	1A1Ch	Per unit
		1A1Dh	Per unit
	ADC internal shared 2.0-V reference, temperature 30°C	1A1Eh	Per unit
		1A1Fh	Per unit
	ADC internal shared 2.0-V reference, high temperature (3)	1A20h	Per unit
		1A21h	Per unit
	ADC internal shared 2.5-V reference, temperature 30°C	1A22h	Per unit
		1A23h	Per unit
	ADC internal shared 2.5-V reference, high temperature (3)	1A24h	Per unit
		1A25h	Per unit
Reference and DCO calibration	Calibration tag	1A26h	12h
	Calibration length	1A27h	0Ah
	Internal shared 1.5-V reference factor	1A28h	Per unit
		1A29h	Per unit
	Internal shared 2.0-V reference factor	1A2Ah	Per unit
		1A2Bh	Per unit
	Internal shared 2.5-V reference factor	1A2Ch	Per unit
		1A2Dh	Per unit
	DCO tap settings for 16 MHz, temperature 30°C	1A2Eh	Per unit
		1A2Fh	Per unit
	DCO tap settings for 24 MHz, temperature 30°C (4)	1A30h	Per unit
		1A31h	Per unit

(3) The calibration value is device dependent at 105°C.
(4) This value can be directly loaded into the DCO bits in the CSCTL0 register to get an accurate 24-MHz frequency at room temperature, especially when MCU exits from LPM3 and below. TI also suggests to use a predivider to decrease the frequency if the temperature drift might result an overshoot faster than 24 MHz.

版权 © 2018–2019, Texas Instruments Incorporated

6.13 Identification

6.13.1 Revision Identification

The device revision information is shown as part of the top-side marking on the device package. The device-specific errata sheet describes these markings. For links to all of the errata sheets for the devices in this data sheet, see 节 8.4.

The hardware revision is also stored in the Device Descriptor structure in the Info Block section. For details on this value, see the "Hardware Revision" entries in 节 6.12.

6.13.2 Device Identification

The device type can be identified from the top-side marking on the device package. The device-specific errata sheet describes these markings. For links to all of the errata sheets for the devices in this data sheet, see 节 8.4.

A device identification value is also stored in the Device Descriptor structure in the Info Block section. For details on this value, see the "Device ID" entries in 节 6.12.

6.13.3 JTAG Identification

Programming through the JTAG interface, including reading and identifying the JTAG ID, is described in detail in the *MSP430 Programming With the JTAG Interface*.

7 Applications, Implementation, and Layout

注

Information in the following applications sections is not part of the TI component specification, and TI does not warrant its accuracy or completeness. TI's customers are responsible for determining suitability of components for their purposes. Customers should validate and test their implementation to confirm system functionality.

7.1 Device Connection and Layout Fundamentals

This section discusses the recommended guidelines when designing with the MSP430 MCU. These guidelines are to make sure that the device has proper connections for powering, programming, debugging, and optimum analog performance.

7.1.1 Power Supply Decoupling and Bulk Capacitors

It is recommended to connect a combination of a 10-µF plus a 100-nF low-ESR ceramic decoupling capacitor to the DVCC pin. Higher-value capacitors can be used but can impact supply rail ramp-up time. Place the decoupling capacitors as close as possible to the pins that they decouple (within a few millimeters).

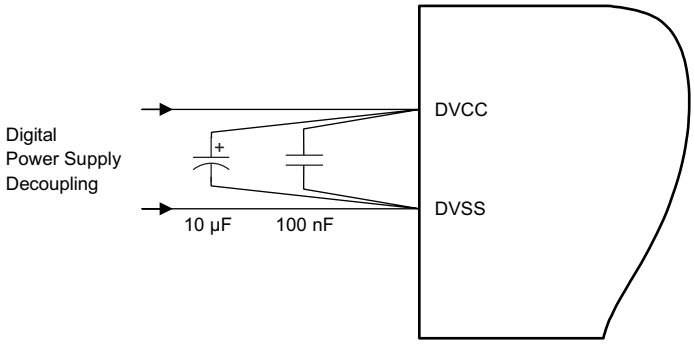

图 7-1. Power Supply Decoupling

7.1.2 External Oscillator

Depending on the device variant (see 节 3), the device can support a low-frequency crystal (32 kHz) on the LFXT pins, a high-frequency crystal on the HFXT pins, or both. External bypass capacitors for the crystal oscillator pins are required.

It is also possible to apply digital clock signals to the LFXIN and HFXIN input pins that meet the specifications of the respective oscillator if the appropriate LFXTBYPASS or HFXTBYPASS mode is selected. In this case, the associated LFXOUT and HFXOUT pins can be used for other purposes. If they are left unused, they must be terminated according to 节 4.6.

图 7-2 shows a typical connection diagram.

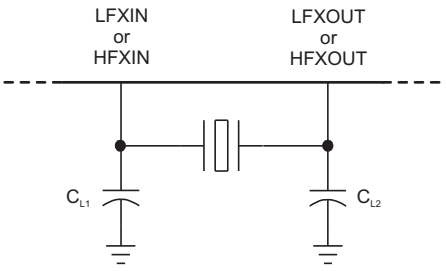

图 7-2. Typical Crystal Connection

版权 © 2018–2019, Texas Instruments Incorporated

See *MSP430 32-kHz Crystal Oscillators* for more information on selecting, testing, and designing a crystal oscillator with MSP430 MCUs.

7.1.3 JTAG

With the proper connections, the debugger and a hardware JTAG interface (such as the MSP-FET or MSP-FET430UIF) can be used to program and debug code on the target board. In addition, the connections also support the MSP-GANG production programmers, thus providing an easy way to program prototype boards, if desired. 图 7-3 shows the connections between the 14-pin JTAG connector and the target device required to support in-system programming and debugging for 4-wire JTAG communication. 图 7-4 shows the connections for 2-wire JTAG mode (Spy-Bi-Wire).

The connections for the MSP-FET and MSP-FET430UIF interface modules and the MSP-GANG are identical. Both can supply V_{CC} to the target board (through pin 2). In addition, the MSP-FET and MSP-FET430UIF interface modules and MSP-GANG have a V_{CC} sense feature that, if used, requires an alternate connection (pin 4 instead of pin 2). The VCC-sense feature senses the local V_{CC} present on the target board (that is, a battery or other local power supply) and adjusts the output signals accordingly. 图 7-3 and 图 7-4 show a jumper block that supports both scenarios of supplying V_{CC} to the target board. If this flexibility is not required, the desired V_{CC} connections can be hard-wired to eliminate the jumper block. Pins 2 and 4 must not be connected at the same time.

For additional design information regarding the JTAG interface, see the MSP430 hardware tools user's guide.

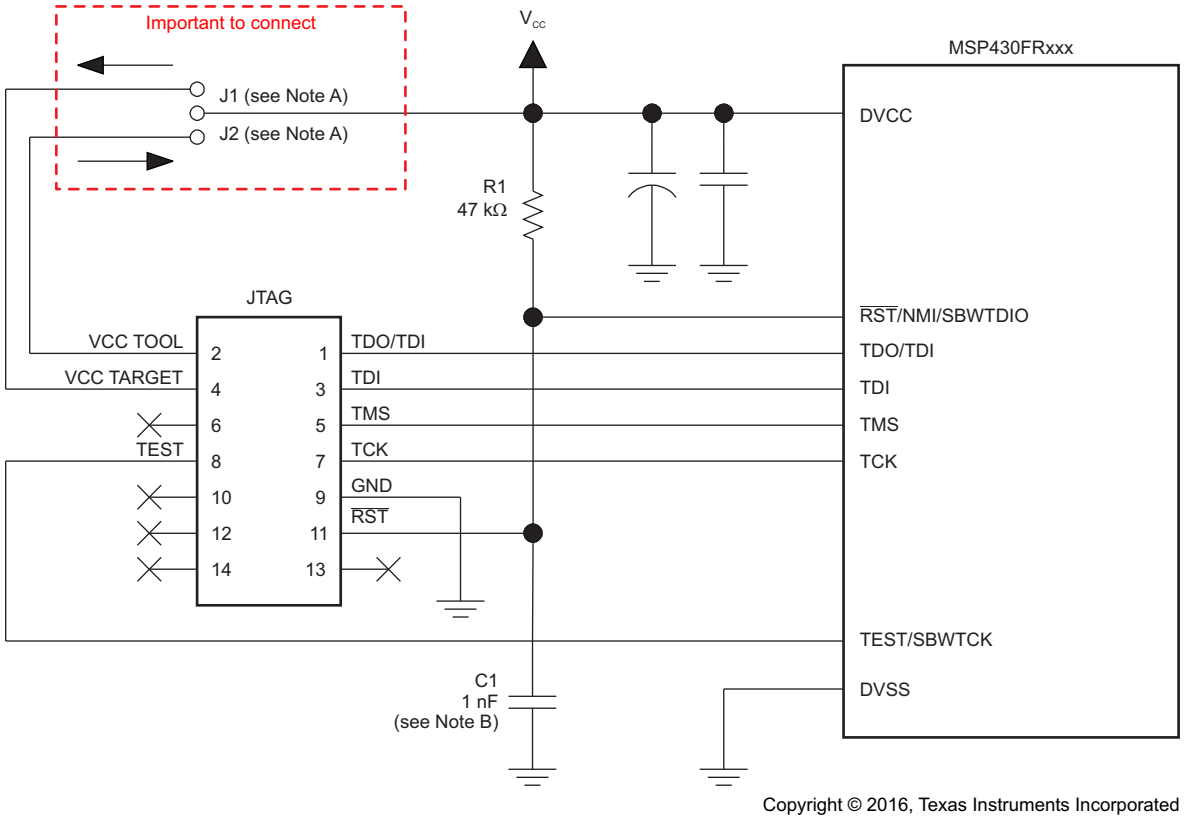

Copyright © 2016, Texas Instruments Incorporated

A. If a local target power supply is used, make connection J1. If power from the debug or programming adapter is used, make connection J2.

B. The upper limit for C1 is 1.1 nF when using current TI tools.

图 7-3. Signal Connections for 4-Wire JTAG Communication

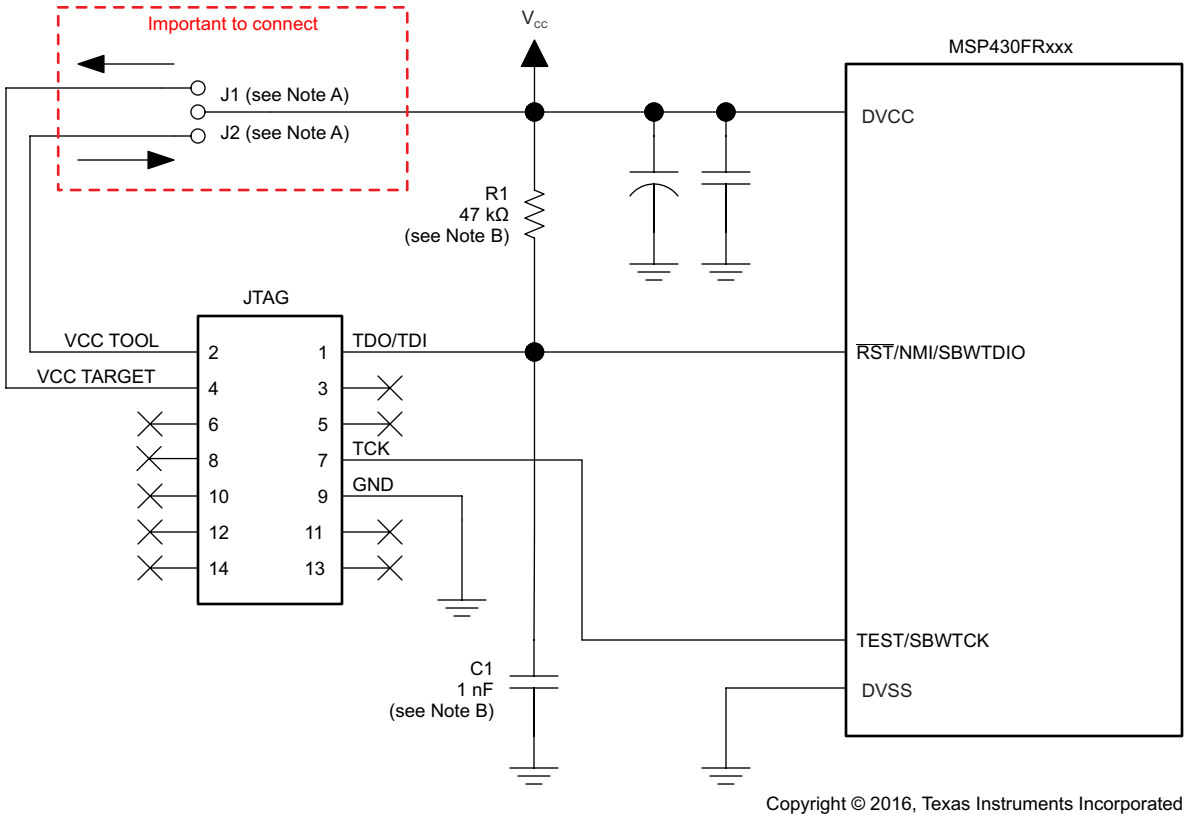

A. Make connection J1 if a local target power supply is used, or make connection J2 if the target is powered from the debug or programming adapter.

B. The device $\overline{\text{RST}}$/NMI/SBWTDIO pin is used in 2-wire mode for bidirectional communication with the device during JTAG access, and any capacitance that is attached to this signal can affect the ability to establish a connection with the device. The upper limit for C1 is 1.1 nF when using current TI tools.

图 7-4. Signal Connections for 2-Wire JTAG Communication (Spy-Bi-Wire)

7.1.4 Reset

The reset pin can be configured as a reset function (default) or as an NMI function in the special function register (SFR), SFRRPCR.

In reset mode, the $\overline{\text{RST}}$/NMI pin is active low, and a pulse applied to this pin that meets the reset timing specifications generates a BOR-type device reset.

Setting SYSNMI causes the $\overline{\text{RST}}$/NMI pin to be configured as an external NMI source. The external NMI is edge sensitive, and its edge is selectable by SYSNMIIES. Setting the NMIIE enables the interrupt of the external NMI. When an external NMI event occurs, the NMIIFG is set.

The $\overline{\text{RST}}$/NMI pin can have either a pullup or pulldown that is enabled or not. SYSRSTUP selects either pullup or pulldown, and SYSRSTRE causes the pullup (default) or pulldown to be enabled (default) or not. If the $\overline{\text{RST}}$/NMI pin is unused, it is required either to select and enable the internal pullup or to connect an external 47-kΩ pullup resistor to the $\overline{\text{RST}}$/NMI pin with a 2.2-nF pulldown capacitor. The pulldown capacitor should not exceed 1.1 nF when using devices with Spy-Bi-Wire interface in Spy-Bi-Wire mode or in 4-wire JTAG mode with TI tools like FET interfaces or GANG programmers.

See the *MSP430FR4xx and MSP430FR2xx Family User's Guide* for more information on the referenced control registers and bits.

7.1.5 Unused Pins

For details on the connection of unused pins, see节 4.6.

版权 © 2018–2019, Texas Instruments Incorporated

7.1.6 General Layout Recommendations

- Proper grounding and short traces for external crystal to reduce parasitic capacitance. See *MSP430 32-kHz Crystal Oscillators* for recommended layout guidelines.
- Proper bypass capacitors on DVCC, AVCC, and reference pins if used.
- Avoid routing any high-frequency signal close to an analog signal line. For example, keep digital switching signals such as PWM or JTAG signals away from the oscillator circuit and ADC signals.
- Proper ESD level protection should be considered to protect the device from unintended high-voltage electrostatic discharge. See *MSP430 System-Level ESD Considerations* for guidelines.

7.1.7 Do's and Don'ts

During power up, power down, and device operation, the voltage difference between AVCC and DVCC must not exceed the limits specified in the Absolute Maximum Ratings section. Exceeding the specified limits can cause malfunction of the device including erroneous writes to RAM and FRAM.

7.2 Peripheral- and Interface-Specific Design Information

7.2.1 ADC Peripheral

7.2.1.1 Partial Schematic

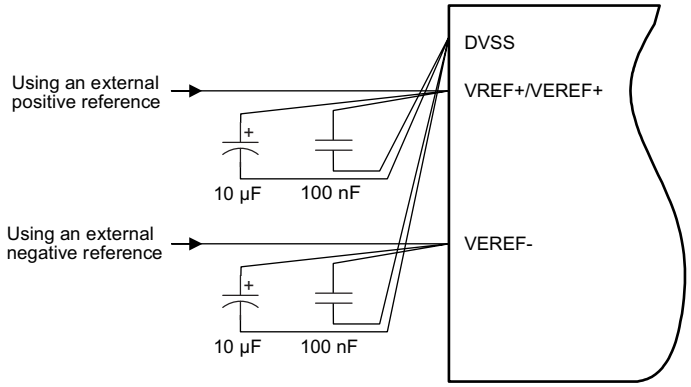

图 7-5. ADC Grounding and Noise Considerations

7.2.1.2 Design Requirements

As with any high-resolution ADC, appropriate printed-circuit-board layout and grounding techniques should be followed to eliminate ground loops, unwanted parasitic effects, and noise.

Ground loops are formed when return current from the ADC flows through paths that are common with other analog or digital circuitry. This current can generate small unwanted offset voltages that can add to or subtract from the reference or input voltages of the ADC. The general guidelines in 节 7.1.1 combined with the connections shown in 图 7-5 prevent these offset voltages.

In addition to grounding, ripple and noise spikes on the power-supply lines that are caused by digital switching or switching power supplies can corrupt the conversion result. TI recommends a noise-free design using separate analog and digital ground planes with a single-point connection to achieve high accuracy.

图 7-5 shows the recommended decoupling circuit when an external voltage reference is used. The internal reference module has a maximum drive current as described in the sections *ADC Pin Enable* and *1.2-V Reference Settings* of the *MSP430FR4xx and MSP430FR2xx Family User's Guide*.

The reference voltage must be a stable voltage for accurate measurements. The capacitor values that are selected in the general guidelines filter out the high- and low-frequency ripple before the reference voltage enters the device. In this case, the 10-µF capacitor buffers the reference pin and filters low-frequency ripple, and the 100-nF bypass capacitor filters high-frequency noise.

7.2.1.3 Layout Guidelines

Components that are shown in the partial schematic (see 图 7-5) should be placed as close as possible to the respective device pins to avoid long traces, because they add additional parasitic capacitance, inductance, and resistance on the signal.

Avoid routing analog input signals close to a high-frequency pin (for example, a high-frequency PWM), because the high-frequency switching can be coupled into the analog signal.

7.3 ROM Libraries

The MSP430FR235x and MSP430FR215x devices in the MSP430FR4xx family have MSP430 Driver Library and FFT Library in ROM.

MSP430 software libraries in ROM are tested to work with both Code Composer Studio and IAR Embedded Workbench toolchains.

- For the ROM image to be compatible between CCS and IAR tool chains, there are certain project properties restrictions. See the TI.com attribute guide for more details.
- To use DriverLib in ROM, #include "rom_driverlib.h". Header file checks continue to provide helpful hints at build time until the user application adheres to __cc_rom.
- To use FFTLib in ROM, #include "DSPLib.h". FFTLib is a subset of the MSP software library DSPLib.
- For more information, see the MSP430 Driver Library for MSP430FR2xx_4xx ROM README and MSP DSP Library ROM README in MSP430Ware. The library ROM image is located above the 64KB memory address. Application code using ROM must be large code model (20-bit address pointer rather than 16-bit address pointer).

Benefits of ROM library use include:

- Code execution at clock speeds that exceed 8 MHz is faster from ROM than from FRAM, because the code avoids FRAM wait states (except FRAM controller cache hits). Without FRAM wait states, code execution performance is limited by only the processor clock, which is generally faster than other subsystems. Executing code from RAM gives comparable performance, but the available RAM size is typically more limited.
- More nonvolatile storage (FRAM) available in the device is left for application code.

7.4 Typical Applications

表 7-1 lists TI reference designs that use the MSP430FR235x devices in real-world application scenarios. Consult these designs for additional guidance regarding schematic, layout, and software implementation. For the most up-to-date list of available TI reference designs, visit the TI reference designs library.

表 7-1. Tools and Reference Designs

DESIGN NAME	LINK
4- to 20-mA Loop-Powered RTD Temperature Transmitter Reference Design With MSP430 Smart Analog Combo	TIDM-01000
MSP430FR2355 LaunchPad development kit	MSP-EXP430FR2355

版权 © 2018–2019, Texas Instruments Incorporated

8 器件和文档支持

8.1 使用入门

有关 MSP430™ 系列器件以及开发协助工具和库的更多信息，请访问 MSP430 超低功耗传感和测量 MCU 概述。

8.2 器件命名规则

为了标示产品开发周期所处的阶段，TI 为所有 MSP MCU 器件的部件号分配了前缀。每个 MSP MCU 商用系列产品成员都具有以下两个前缀之一：MSP 或 XMS。这些前缀代表了产品开发的发展阶段，即从工程原型 (XMS) 直到完全合格的生产器件 (MSP)。

XMS - 实验器件，不一定代表最终器件的电气规格

MSP - 完全合格的生产器件

XMS 器件在供货时附带如下免责声明：

“开发中的产品用于内部评估用途。”

MSP 器件的特性已经全部明确，并且器件的质量和可靠性已经完全论证。TI 的标准保修证书对该器件适用。

预测显示原型器件 (XMS) 的故障率大于标准生产器件。由于这些器件的预计最终使用故障率尚不确定，德州仪器 (TI) 建议不要将它们用于任何生产系统。请仅使用合格的生产器件。

TI 器件的命名规则还包括一个带有器件系列名称的后缀。此后缀表示温度范围、封装类型和配送形式。图 8-1 提供了解读完整器件名称的图例。

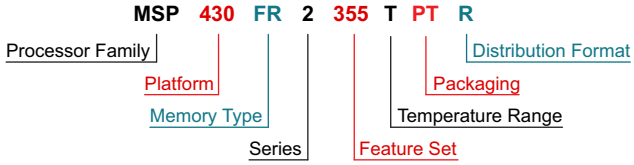

Processor Family	MSP = Mixed-Signal Processor XMS = Experimental Silicon	
Platform	430 = MSP430 16-Bit Low-Power Microcontroller	
Memory Type	FR = FRAM	
Series	2 = FRAM 2 Series, up to 24 MHz without LCD	
Feature Set	**First and Second Digits:** SAC Level / ADC Channels / COMP / 16-bit Timers / I/Os 35 = SAC-L3 / Up to 12 / 2 / 4 / Up to 44 15 = No SAC / Up to 12 / 2 / 4 / Up to 44	**Third Digit:** FRAM (KB) / SRAM (KB) 5 = 32 / 4 3 = 16 / 2
Temperature Range	T = –40°C to 105°C	
Packaging	http://www.ti.com/packaging	
Distribution Format	T = Small reel R = Large reel No marking = Tube or tray	

图 **8-1.** 器件命名规则

8.3 工具和软件

请参阅《*适用于 MSP430™ MCU 的 Code Composer Studio™ IDE 用户指南*》，以了解有关可用 功能）的详细信息。

表 8-1 列出了 MSP430FR235x 和 MSP430FR215x 微控制器所 支持的 调试特性。

表 8-1. 硬件 特性

MSP430 架构	四线制 JTAG	两线制 JTAG	断点 (N)	范围断点	时钟控制	状态序列发生器	跟踪缓冲器	LPMx.5 调试支持	EEM 版本
MSP430Xv2	有	有	3	有	是	否	否	否	S

设计套件与评估模块

MSP430FR2355 LaunchPad 开发套件

MSP-EXP430FR2355 LaunchPad 开发套件是一个易于使用的评估模块 (EVM)，该模块包含了在超低功耗 MSP430FR215x 和 MSP430FR235x FRAM 微控制器系列上开始进行开发所需要的所有资源，包括用于编程、调试和能量测量的板载调试探针。

MSP-TS430PT48 目标开发板

MSP-TS430PT48 目标开发板是一款 48 引脚 ZIF 插座目标板，用于通过 JTAG 接口或 Spy-Bi-Wire（双线制 JTAG）协议对 MSP430 MCU 进行系统内编程和调试。

软件

MSP430Ware™ 软件

MSP430Ware 软件集合了所有 MSP430 器件的代码示例、数据表以及其他设计资源，打包提供给用户。除了提供已有 MSP430 设计资源的完整集合外，MSP430Ware 软件还包含名为 MSP 驱动程序库的高级 API。借助该库可以轻松地对 MSP430 硬件进行编程。MSP430Ware 软件以 CCS 组件或独立软件包两种形式提供。

MSP430FR235x 和 MSP430FR215x 代码示例

根据不同应用需求配置各集成外设的每个 MSP 器件均具备相应的 C 代码示例。

MSP 驱动程序库

MSP 驱动程序库的抽象 API 提供易用的函数调用，无需直接操纵 MSP430 硬件的位与字节。完整的文档通过具有帮助意义的 API 指南交付，其中包括有关每个函数调用和经过验证的参数的详细信息。开发人员可以使用驱动程序库功能，以最低开销编写完整项目。

MSP EnergyTrace™ 技术

适用于 MSP430 微控制器的 EnergyTrace 技术是基于电能的代码分析工具，适用于测量和显示应用的电能系统配置并帮助优化应用以实现超低功耗。

ULP（超低功耗）Advisor

ULP Advisor™软件是一款辅助工具，旨在指导开发人员编写更为高效的代码，从而充分利用 MSP430 和 MSP432 微控制器 独特 的超低 功耗™特性。ULP Advisor 的目标人群是微控制器的资深开发者和开发新手，可以根据详尽的 ULP 检验表检查代码，以便最大限度地减少应用程序的能耗。在编译时，ULP Advisor 会提供通知和备注以突出显示代码中可以进一步优化的区域，进而实现更低功耗。

适用于 MSP 超低功耗微控制器的 FRAM 嵌入式软件实用程序

FRAM 实用程序旨在作为不断扩充的嵌入式软件实用程序集合，其中的实用程序充分利用 FRAM 的超低功耗和近乎无限次的写入寿命。这些实用程序适用于 MSP430FRxx FRAM 微控制器并提供示例代码协助应用程序开发。其中的实用程序包含功耗计算实用程序 (CTPL)。CTPL 是一套实用程序 API 集，通过 CTPL 能够轻松使用 LPMx.5 低功耗模式以及强大的关断模式，允许应用程序在检测到功率损耗时节约能耗并恢复关键的系统元件。

IEC60730 软件包

版权 © 2018–2019, Texas Instruments Incorporated

IEC60730 MSP430 软件包经过专门开发，用于协助客户达到 IEC 60730-1:2010（家用及类似用途的自动化电气控制 - 第 1 部分：一般要求）B 类产品的要求。其中涵盖家用电器、电弧检测器、电源转换器、电动工具、电动自行车及其他诸多产品。IEC60730 MSP430 软件包可以嵌入在 MSP430 MCU 中 运行的客户应用， 从而帮助客户简化其消费类器件在功能安全方面遵循 IEC 60730-1:2010 B 类规范的认证工作。

适用于 MSP 的定点数学库

MSP IQmath 和 Qmath 库是为 C 语言开发者提供的一套经过高度优化的高精度数学运算函数集合，能够将浮点算法无缝嵌入 MSP430 和 MSP432 器件的定点代码中。这些例程通常用于计算密集型实时 应用， 而优化的执行速度、高精度以及超低能耗通常是影响这些实时应用的关键因素。与使用浮点数学算法编写的同等代码相比，使用 IQmath 和 Qmath 库可以大幅提高执行速度并显著降低能耗。

适用于 MSP430 的浮点数学库

TI 在低功耗和低成本微控制器领域锐意创新，为您提供 MSPMATHLIB。此标量函数的浮点数学库，能够充分利用器件的智能外设，使速度最高达到标准 MSP430 数学函数的 26 倍。Mathlib 能够轻松集成到您的设计中。该运算库免费使用并集成在 Code Composer Studio IDE 和 IAR Embedded Workbench IDE 中。

开发工具

适用于 MSP 微控制器的 Code Composer Studio™ 集成开发环境

Code Composer Studio (CCS) 集成开发环境 (IDE) 支持所有 MSP 微控制器器件。CCS 包含一整套用于开发和调试嵌入式 应用的工具。它包含了优化的 C/C++ 编译器、源代码编辑器、项目构建环境、调试器、描述器以及其他多种 功能。

IAR Embedded Workbench® IDE

适用于 MSP430 MCU 的 IAR Embedded Workbench IDE 是一套用于构建和调试基于 MSP430 微控制器的嵌入式 应用 的完整 C/C++ 编译器工具链。该调试器可用于源代码和反汇编代码，而且支持复杂代码和数据断点。它还提供了硬件仿真器，可在未连接实际目标的情况下进行调试。

Uniflash 独立闪存工具

UniFlash 独立闪存工具用于在 TI MCU 上对片上闪存进行编程。Uniflash 具有 GUI、命令行和脚本界面。Uniflash 软件工具支持两种使用方式：TI 云工具或者从 TI 网页下载的桌面应用。

MSP MCU 编程器和调试器

MSP-FET 是一款强大的仿真开发工具（通常称为调试探针），可帮助用户在 MSP 低功耗微控制器 (MCU) 中快速开发应用。创建 MCU 软件通常需要将生成的二进制程序下载到 MSP 器件中，从而进行验证和调试。

MSP-GANG 生产编程器

MSP Gang 编程器是一款 MSP430 或 MSP432 器件编程器，可同时对多达八个完全相同的 MSP430 或 MSP432 闪存或 FRAM 器件进行编程。MSP Gang 编程器可使用标准的 RS-232 或 USB 连接与主机 PC 相连并提供灵活的编程选项，允许用户完全自定义流程。

TIREX Resource Explorer (TIRex)

用于查找器件和开发板的示例、库、可执行代码和文档的在线门户。您可以直接在 Code Composer Studio IDE 内访问 TIRex，也可以在“TI 云工具”中访问 TIRex。

TI 云工具

快速在 dev.ti.com 上开始开发。首先使用 Resource Explorer 界面快速找到您需要的所有文件。然后使用行业领先的 Code Composer Studio Cloud IDE 在云中编辑、生成和调试嵌入式 应用 。

GCC - 适用于 MSP 的编译器

MSP430 和 MSP432 GCC 开源包是一个完整的调试器和开源 C/C++ 编译器工具链，用于基于 MSP430 和 MSP432 微控制器构建和调试嵌入式 应用 。这些免费的 GCC 编译器支持所有 MSP430 和 MSP432 器件且没有代码大小限制。此外，这些编译器可以通过命令行独立使用，也可在 Code Composer Studio v6.0 或更高版本中使用。不管您使用的是 Windows®、 Linux® 还是 macOS®环境，马上开始吧。

版权 © 2018–2019, Texas Instruments Incorporated

8.4 文档支持

以下文档介绍了 MSP430FR235x 和 MSP430FR215x 微控制器。

接收文档更新通知

要接收文档更新通知（包括芯片勘误表），请转至 ti.com.cn 上您的器件对应的产品文件夹（关于产品文件夹的链接，请参见节 8.5）。请单击右上角的“通知我”按钮。点击注册后，即可收到产品信息更改每周摘要（如有）。有关更改的详细信息，请查看任意修订文档的修订历史记录。

勘误表

《MSP430FR2355 器件勘误表》

介绍了这款器件所有芯片修订版本的功能规格的已知例外情况。

《MSP430FR2353 器件勘误表》

介绍了这款器件所有芯片修订版本的功能规格的已知例外情况。

《MSP430FR2155 器件勘误表》

介绍了这款器件所有芯片修订版本的功能规格的已知例外情况。

《MSP430FR2153 器件勘误表》

介绍了这款器件所有芯片修订版本的功能规格的已知例外情况。

用户指南

《MSP430FR4xx 和 MSP430FR2xx 系列用户指南》

详细 说明 了该器件系列提供的所有模块和外设。

《MSP430 FRAM 器件引导加载程序 (BSL)》用户指南

MSP430 MCU 上的引导加载程序 (BSL) 允许用户在原型设计、投产和维护等各阶段与 MSP430 MCU 中的嵌入式存储器进行通信。可编程存储器（FRAM 存储器）和数据存储器 (RAM) 均可按要求予以修改。

《通过 JTAG 接口对 MSP430 进行编程》

此文档介绍了使用 JTAG 通信端口擦除、编程和验证基于 MSP430 闪存和 FRAM 的微控制器系列的存储器模块所需的功能。此外，该文档还介绍了如何编程所有 MSP430 器件上均具备的 JTAG 访问安全保险丝。此文档介绍了使用标准四线制 JTAG 接口和两线制 JTAG 接口（也称为 Spy-Bi-Wire (SBW)）的器件访问。

《MSP430 硬件工具用户指南》

此手册介绍了 TI MSP-FET430 闪存仿真工具 (FET) 的硬件。FET 是针对 MSP430 超低功耗微控制器的程序开发工具。文中对提供的接口类型，即并行端口接口和 USB 接口进行了说明。

应用报告

《MSP430 32kHz 晶体振荡器》

选择合适的晶体、正确的负载电路和适当的电路板布局是实现稳定的晶体振荡器的关键。该应用报告总结了晶体振荡器的功能，介绍了用于选择合适的晶体以实现 MSP430 超低功耗运行的参数。此外，还给出了正确电路板布局的提示和示例。此外，为了确保振荡器在大规模生产后能够稳定运行，还可能需要进行一些振荡器测试，该文档中提供了有关这些测试的详细信息。

《MSP430 系统级 ESD 注意事项》

随着芯片技术向更低电压方向发展以及设计具有成本效益的超低功耗组件的需求的出现，系统级 ESD 要求变得越来越苛刻。该应用报告介绍了不同的 ESD 主题，旨在帮助电路板设计人员和 OEM 理解并设计出稳健耐用的系统级设计。

8.5 相关链接

表 8-2 列出了快速访问链接。类别包括技术文档、支持和社区资源、工具和软件，以及立即订购快速访问。

版权 © 2018–2019, Texas Instruments Incorporated

表 **8-2.** 相关链接

器件	产品文件夹	立即订购	技术文档	工具和软件	支持和社区
MSP430FR2355	请单击此处	请单击此处	请单击此处	请单击此处	请单击此处
MSP430FR2353	请单击此处	请单击此处	请单击此处	请单击此处	请单击此处
MSP430FR2155	请单击此处	请单击此处	请单击此处	请单击此处	请单击此处
MSP430FR2153	请单击此处	请单击此处	请单击此处	请单击此处	请单击此处

版权 © 2018–2019, Texas Instruments Incorporated

8.6 商标

LaunchPad, MSP430, MSP430Ware, Code Composer Studio, E2E, EnergyTrace, ULP Advisor, 功耗, 适用于 MSP 微控制器的 Code Composer Studio are trademarks of Texas Instruments.
macOS is a registered trademark of Apple, Inc.
IAR Embedded Workbench is a registered trademark of IAR Systems.
Linux is a registered trademark of Linus Torvalds.
Windows is a registered trademark of Microsoft Corporation.

8.7 静电放电警告



ESD 可能会损坏该集成电路。德州仪器 (TI) 建议通过适当的预防措施处理所有集成电路。如果不遵守正确的处理措施和安装程序，可能会损坏集成电路。

ESD 的损坏小至导致微小的性能降级，大至整个器件故障。 精密的集成电路可能更容易受到损坏，这是因为非常细微的参数更改都可能会导致器件与其发布的规格不相符。

8.8 Glossary

TI Glossary This glossary lists and explains terms, acronyms, and definitions.

版权 © 2018–2019, Texas Instruments Incorporated

9 机械、封装和可订购信息

以下页面包含机械、封装和可订购信息。这些信息是指定器件的最新可用数据。这些数据会在无通知且不对本文档进行修订的情况下发生改变。欲获得该数据表的浏览器版本，请查阅左侧的导航栏。

PACKAGING INFORMATION

Orderable part number	Status (1)	Material type (2)	Package | Pins	Package qty | Carrier	RoHS (3)	Lead finish/ Ball material (4)	MSL rating/ Peak reflow (5)	Op temp (°C)	Part marking (6)
M430FR2155TRSMTG4	Active	Production	VQFN (RSM) | 32	250 | SMALL T&R	Yes	NIPDAU	Level-1-260C-UNLIM	-40 to 105	FR2155
M430FR2155TRSMTG4.A	Active	Production	VQFN (RSM) | 32	250 | SMALL T&R	Yes	NIPDAU	Level-1-260C-UNLIM	-40 to 105	FR2155
M430FR2355TRSMRG4	Active	Production	VQFN (RSM) | 32	3000 | LARGE T&R	Yes	NIPDAU	Level-1-260C-UNLIM	-40 to 105	FR2355
M430FR2355TRSMRG4.A	Active	Production	VQFN (RSM) | 32	3000 | LARGE T&R	Yes	NIPDAU	Level-1-260C-UNLIM	-40 to 105	FR2355
MSP430FR2153TDBT	Active	Production	TSSOP (DBT) | 38	50 | TUBE	Yes	NIPDAU	Level-2-260C-1 YEAR	-40 to 105	430FR2153
MSP430FR2153TDBT.A	Active	Production	TSSOP (DBT) | 38	50 | TUBE	Yes	NIPDAU	Level-2-260C-1 YEAR	-40 to 105	430FR2153
MSP430FR2153TDBTR	Active	Production	TSSOP (DBT) | 38	2000 | LARGE T&R	Yes	NIPDAU	Level-2-260C-1 YEAR	-40 to 105	430FR2153
MSP430FR2153TDBTR.A	Active	Production	TSSOP (DBT) | 38	2000 | LARGE T&R	Yes	NIPDAU	Level-2-260C-1 YEAR	-40 to 105	430FR2153
MSP430FR2153TPT	Active	Production	LQFP (PT) | 48	250 | JEDEC TRAY (10+1)	Yes	NIPDAU	Level-3-260C-168 HR	-40 to 105	430FR2153
MSP430FR2153TPT.A	Active	Production	LQFP (PT) | 48	250 | JEDEC TRAY (10+1)	Yes	NIPDAU	Level-3-260C-168 HR	-40 to 105	430FR2153
MSP430FR2153TPTR	Active	Production	LQFP (PT) | 48	1000 | LARGE T&R	Yes	NIPDAU	Level-3-260C-168 HR	-40 to 105	430FR2153
MSP430FR2153TPTR.A	Active	Production	LQFP (PT) | 48	1000 | LARGE T&R	Yes	NIPDAU	Level-3-260C-168 HR	-40 to 105	430FR2153
MSP430FR2153TRHAR	Active	Production	VQFN (RHA) | 40	2500 | LARGE T&R	Yes	NIPDAU	Level-1-260C-UNLIM	-40 to 105	FR2153
MSP430FR2153TRHAR.A	Active	Production	VQFN (RHA) | 40	2500 | LARGE T&R	Yes	NIPDAU	Level-1-260C-UNLIM	-40 to 105	FR2153
MSP430FR2153TRHAT	Active	Production	VQFN (RHA) | 40	250 | SMALL T&R	Yes	NIPDAU	Level-1-260C-UNLIM	-40 to 105	FR2153
MSP430FR2153TRHAT.A	Active	Production	VQFN (RHA) | 40	250 | SMALL T&R	Yes	NIPDAU	Level-1-260C-UNLIM	-40 to 105	FR2153
MSP430FR2153TRSMR	Active	Production	VQFN (RSM) | 32	3000 | LARGE T&R	Yes	SN	Level-1-260C-UNLIM	-40 to 105	FR2153
MSP430FR2153TRSMR.A	Active	Production	VQFN (RSM) | 32	3000 | LARGE T&R	Yes	SN	Level-1-260C-UNLIM	-40 to 105	FR2153
MSP430FR2153TRSMT	Active	Production	VQFN (RSM) | 32	250 | SMALL T&R	Yes	SN	Level-1-260C-UNLIM	-40 to 105	FR2153
MSP430FR2153TRSMT.A	Active	Production	VQFN (RSM) | 32	250 | SMALL T&R	Yes	SN	Level-1-260C-UNLIM	-40 to 105	FR2153
MSP430FR2155TDBT	Active	Production	TSSOP (DBT) | 38	50 | TUBE	Yes	NIPDAU	Level-2-260C-1 YEAR	-40 to 105	430FR2155
MSP430FR2155TDBT.A	Active	Production	TSSOP (DBT) | 38	50 | TUBE	Yes	NIPDAU	Level-2-260C-1 YEAR	-40 to 105	430FR2155
MSP430FR2155TDBTR	Active	Production	TSSOP (DBT) | 38	2000 | LARGE T&R	Yes	NIPDAU	Level-2-260C-1 YEAR	-40 to 105	430FR2155
MSP430FR2155TDBTR.A	Active	Production	TSSOP (DBT) | 38	2000 | LARGE T&R	Yes	NIPDAU	Level-2-260C-1 YEAR	-40 to 105	430FR2155
MSP430FR2155TPT	Active	Production	LQFP (PT) | 48	250 | JEDEC TRAY (10+1)	Yes	NIPDAU	Level-3-260C-168 HR	-40 to 105	430FR2155
MSP430FR2155TPT.A	Active	Production	LQFP (PT) | 48	250 | JEDEC TRAY (10+1)	Yes	NIPDAU	Level-3-260C-168 HR	-40 to 105	430FR2155

Orderable part number	Status (1)	Material type (2)	Package | Pins	Package qty | Carrier	RoHS (3)	Lead finish/ Ball material (4)	MSL rating/ Peak reflow (5)	Op temp (°C)	Part marking (6)
MSP430FR2155TPTR	Active	Production	LQFP (PT) | 48	1000 | LARGE T&R	Yes	NIPDAU	Level-3-260C-168 HR	-40 to 105	430FR2155
MSP430FR2155TPTR.A	Active	Production	LQFP (PT) | 48	1000 | LARGE T&R	Yes	NIPDAU	Level-3-260C-168 HR	-40 to 105	430FR2155
MSP430FR2155TRHAR	Active	Production	VQFN (RHA) | 40	2500 | LARGE T&R	Yes	NIPDAU	Level-1-260C-UNLIM	-40 to 105	FR2155
MSP430FR2155TRHAR.A	Active	Production	VQFN (RHA) | 40	2500 | LARGE T&R	Yes	NIPDAU	Level-1-260C-UNLIM	-40 to 105	FR2155
MSP430FR2155TRHAT	Active	Production	VQFN (RHA) | 40	250 | SMALL T&R	Yes	NIPDAU	Level-1-260C-UNLIM	-40 to 105	FR2155
MSP430FR2155TRHAT.A	Active	Production	VQFN (RHA) | 40	250 | SMALL T&R	Yes	NIPDAU	Level-1-260C-UNLIM	-40 to 105	FR2155
MSP430FR2155TRSMR	Active	Production	VQFN (RSM) | 32	3000 | LARGE T&R	Yes	NIPDAU	Level-1-260C-UNLIM	-40 to 105	FR2155
MSP430FR2155TRSMR.A	Active	Production	VQFN (RSM) | 32	3000 | LARGE T&R	Yes	NIPDAU	Level-1-260C-UNLIM	-40 to 105	FR2155
MSP430FR2155TRSMT	Active	Production	VQFN (RSM) | 32	250 | SMALL T&R	Yes	NIPDAU	Level-1-260C-UNLIM	-40 to 105	FR2155
MSP430FR2155TRSMT.A	Active	Production	VQFN (RSM) | 32	250 | SMALL T&R	Yes	NIPDAU	Level-1-260C-UNLIM	-40 to 105	FR2155
MSP430FR2353TDBT	Active	Production	TSSOP (DBT) | 38	50 | TUBE	Yes	NIPDAU	Level-2-260C-1 YEAR	-40 to 105	430FR2353
MSP430FR2353TDBT.A	Active	Production	TSSOP (DBT) | 38	50 | TUBE	Yes	NIPDAU	Level-2-260C-1 YEAR	-40 to 105	430FR2353
MSP430FR2353TDBTR	Active	Production	TSSOP (DBT) | 38	2000 | LARGE T&R	Yes	NIPDAU	Level-2-260C-1 YEAR	-40 to 105	430FR2353
MSP430FR2353TDBTR.A	Active	Production	TSSOP (DBT) | 38	2000 | LARGE T&R	Yes	NIPDAU	Level-2-260C-1 YEAR	-40 to 105	430FR2353
MSP430FR2353TPT	Active	Production	LQFP (PT) | 48	250 | JEDEC TRAY (10+1)	Yes	NIPDAU	Level-3-260C-168 HR	-40 to 105	430FR2353
MSP430FR2353TPT.A	Active	Production	LQFP (PT) | 48	250 | JEDEC TRAY (10+1)	Yes	NIPDAU	Level-3-260C-168 HR	-40 to 105	430FR2353
MSP430FR2353TPTR	Active	Production	LQFP (PT) | 48	1000 | LARGE T&R	Yes	NIPDAU	Level-3-260C-168 HR	-40 to 105	430FR2353
MSP430FR2353TPTR.A	Active	Production	LQFP (PT) | 48	1000 | LARGE T&R	Yes	NIPDAU	Level-3-260C-168 HR	-40 to 105	430FR2353
MSP430FR2353TRHAR	Active	Production	VQFN (RHA) | 40	2500 | LARGE T&R	Yes	NIPDAU	Level-1-260C-UNLIM	-40 to 105	FR2353
MSP430FR2353TRHAR.A	Active	Production	VQFN (RHA) | 40	2500 | LARGE T&R	Yes	NIPDAU	Level-1-260C-UNLIM	-40 to 105	FR2353
MSP430FR2353TRHAT	Active	Production	VQFN (RHA) | 40	250 | SMALL T&R	Yes	NIPDAU	Level-1-260C-UNLIM	-40 to 105	FR2353
MSP430FR2353TRHAT.A	Active	Production	VQFN (RHA) | 40	250 | SMALL T&R	Yes	NIPDAU	Level-1-260C-UNLIM	-40 to 105	FR2353
MSP430FR2353TRSMR	Active	Production	VQFN (RSM) | 32	3000 | LARGE T&R	Yes	NIPDAU	Level-1-260C-UNLIM	-40 to 105	FR2353
MSP430FR2353TRSMR.A	Active	Production	VQFN (RSM) | 32	3000 | LARGE T&R	Yes	NIPDAU	Level-1-260C-UNLIM	-40 to 105	FR2353
MSP430FR2353TRSMT	Active	Production	VQFN (RSM) | 32	250 | SMALL T&R	Yes	SN	Level-1-260C-UNLIM	-40 to 105	FR2353
MSP430FR2353TRSMT.A	Active	Production	VQFN (RSM) | 32	250 | SMALL T&R	Yes	SN	Level-1-260C-UNLIM	-40 to 105	FR2353
MSP430FR2355TDBT	Active	Production	TSSOP (DBT) | 38	50 | TUBE	Yes	NIPDAU	Level-2-260C-1 YEAR	-40 to 105	430FR2355
MSP430FR2355TDBT.A	Active	Production	TSSOP (DBT) | 38	50 | TUBE	Yes	NIPDAU	Level-2-260C-1 YEAR	-40 to 105	430FR2355
MSP430FR2355TDBTR	Active	Production	TSSOP (DBT) | 38	2000 | LARGE T&R	Yes	NIPDAU	Level-2-260C-1 YEAR	-40 to 105	430FR2355

Orderable part number	Status (1)	Material type (2)	Package | Pins	Package qty | Carrier	RoHS (3)	Lead finish/ Ball material (4)	MSL rating/ Peak reflow (5)	Op temp (°C)	Part marking (6)
MSP430FR2355TDBTR.A	Active	Production	TSSOP (DBT) | 38	2000 | LARGE T&R	Yes	NIPDAU	Level-2-260C-1 YEAR	-40 to 105	430FR2355
MSP430FR2355TPT	Active	Production	LQFP (PT) | 48	250 | JEDEC TRAY (10+1)	Yes	NIPDAU	Level-3-260C-168 HR	-40 to 105	430FR2355
MSP430FR2355TPT.A	Active	Production	LQFP (PT) | 48	250 | JEDEC TRAY (10+1)	Yes	NIPDAU	Level-3-260C-168 HR	-40 to 105	430FR2355
MSP430FR2355TPTR	Active	Production	LQFP (PT) | 48	1000 | LARGE T&R	Yes	NIPDAU	Level-3-260C-168 HR	-40 to 105	430FR2355
MSP430FR2355TPTR.A	Active	Production	LQFP (PT) | 48	1000 | LARGE T&R	Yes	NIPDAU	Level-3-260C-168 HR	-40 to 105	430FR2355
MSP430FR2355TRHAR	Active	Production	VQFN (RHA) | 40	2500 | LARGE T&R	Yes	NIPDAU	Level-1-260C-UNLIM	-40 to 105	FR2355
MSP430FR2355TRHAR.A	Active	Production	VQFN (RHA) | 40	2500 | LARGE T&R	Yes	NIPDAU	Level-1-260C-UNLIM	-40 to 105	FR2355
MSP430FR2355TRHAT	Active	Production	VQFN (RHA) | 40	250 | SMALL T&R	Yes	NIPDAU	Level-1-260C-UNLIM	-40 to 105	FR2355
MSP430FR2355TRHAT.A	Active	Production	VQFN (RHA) | 40	250 | SMALL T&R	Yes	NIPDAU	Level-1-260C-UNLIM	-40 to 105	FR2355
MSP430FR2355TRSMR	Active	Production	VQFN (RSM) | 32	3000 | LARGE T&R	Yes	SN	Level-1-260C-UNLIM	-40 to 105	FR2355
MSP430FR2355TRSMR.A	Active	Production	VQFN (RSM) | 32	3000 | LARGE T&R	Yes	SN	Level-1-260C-UNLIM	-40 to 105	FR2355
MSP430FR2355TRSMT	Active	Production	VQFN (RSM) | 32	250 | SMALL T&R	Yes	SN	Level-1-260C-UNLIM	-40 to 105	FR2355
MSP430FR2355TRSMT.A	Active	Production	VQFN (RSM) | 32	250 | SMALL T&R	Yes	SN	Level-1-260C-UNLIM	-40 to 105	FR2355

(1) **Status:** For more details on status, see our product life cycle.

(2) **Material type:** When designated, preproduction parts are prototypes/experimental devices, and are not yet approved or released for full production. Testing and final process, including without limitation quality assurance, reliability performance testing, and/or process qualification, may not yet be complete, and this item is subject to further changes or possible discontinuation. If available for ordering, purchases will be subject to an additional waiver at checkout, and are intended for early internal evaluation purposes only. These items are sold without warranties of any kind.

(3) **RoHS values:** Yes, No, RoHS Exempt. See the TI RoHS Statement for additional information and value definition.

(4) **Lead finish/Ball material:** Parts may have multiple material finish options. Finish options are separated by a vertical ruled line. Lead finish/Ball material values may wrap to two lines if the finish value exceeds the maximum column width.

(5) **MSL rating/Peak reflow:** The moisture sensitivity level ratings and peak solder (reflow) temperatures. In the event that a part has multiple moisture sensitivity ratings, only the lowest level per JEDEC standards is shown. Refer to the shipping label for the actual reflow temperature that will be used to mount the part to the printed circuit board.

(6) **Part marking:** There may be an additional marking, which relates to the logo, the lot trace code information, or the environmental category of the part.

Multiple part markings will be inside parentheses. Only one part marking contained in parentheses and separated by a "~" will appear on a part. If a line is indented then it is a continuation of the previous line and the two combined represent the entire part marking for that device.

Important Information and Disclaimer: The information provided on this page represents TI's knowledge and belief as of the date that it is provided. TI bases its knowledge and belief on information provided by third parties, and makes no representation or warranty as to the accuracy of such information. Efforts are underway to better integrate information from third parties. TI has taken and continues to take reasonable steps to provide representative and accurate information but may not have conducted destructive testing or chemical analysis on incoming materials and chemicals. TI and TI suppliers consider certain information to be proprietary, and thus CAS numbers and other limited information may not be available for release.

In no event shall TI's liability arising out of such information exceed the total purchase price of the TI part(s) at issue in this document sold by TI to Customer on an annual basis.

TAPE AND REEL INFORMATION

REEL DIMENSIONS

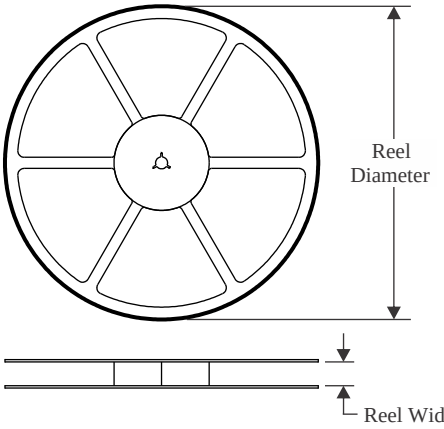

TAPE DIMENSIONS

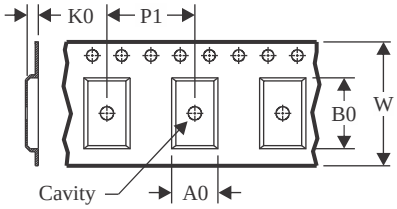

A0	Dimension designed to accommodate the component width
B0	Dimension designed to accommodate the component length
K0	Dimension designed to accommodate the component thickness
W	Overall width of the carrier tape
P1	Pitch between successive cavity centers

QUADRANT ASSIGNMENTS FOR PIN 1 ORIENTATION IN TAPE

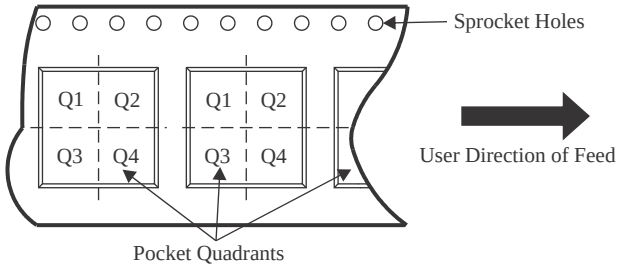

*All dimensions are nominal

Device	Package Type	Package Drawing	Pins	SPQ	Reel Diameter (mm)	Reel Width W1 (mm)	A0 (mm)	B0 (mm)	K0 (mm)	P1 (mm)	W (mm)	Pin1 Quadrant
M430FR2155TRSMTG4	VQFN	RSM	32	250	180.0	12.4	4.25	4.25	1.15	8.0	12.0	Q2
M430FR2355TRSMRG4	VQFN	RSM	32	3000	330.0	12.4	4.25	4.25	1.15	8.0	12.0	Q2
MSP430FR2153TDBTR	TSSOP	DBT	38	2000	330.0	16.4	6.9	10.2	1.8	12.0	16.0	Q1
MSP430FR2153TPTR	LQFP	PT	48	1000	330.0	16.4	9.6	9.6	1.9	12.0	16.0	Q2
MSP430FR2153TPTR	LQFP	PT	48	1000	330.0	16.4	9.6	9.6	1.9	12.0	16.0	Q2
MSP430FR2153TRHAR	VQFN	RHA	40	2500	330.0	16.4	6.3	6.3	1.1	12.0	16.0	Q2
MSP430FR2153TRHAT	VQFN	RHA	40	250	180.0	16.4	6.3	6.3	1.1	12.0	16.0	Q2
MSP430FR2153TRSMR	VQFN	RSM	32	3000	330.0	12.4	4.25	4.25	1.15	8.0	12.0	Q2
MSP430FR2153TRSMT	VQFN	RSM	32	250	180.0	12.4	4.25	4.25	1.15	8.0	12.0	Q2
MSP430FR2155TDBTR	TSSOP	DBT	38	2000	330.0	16.4	6.9	10.2	1.8	12.0	16.0	Q1
MSP430FR2155TPTR	LQFP	PT	48	1000	330.0	16.4	9.6	9.6	1.9	12.0	16.0	Q2
MSP430FR2155TPTR	LQFP	PT	48	1000	330.0	16.4	9.6	9.6	1.9	12.0	16.0	Q2
MSP430FR2155TRHAR	VQFN	RHA	40	2500	330.0	16.4	6.3	6.3	1.1	12.0	16.0	Q2
MSP430FR2155TRHAT	VQFN	RHA	40	250	180.0	16.4	6.3	6.3	1.1	12.0	16.0	Q2
MSP430FR2155TRSMR	VQFN	RSM	32	3000	330.0	12.4	4.25	4.25	1.15	8.0	12.0	Q2
MSP430FR2155TRSMR	VQFN	RSM	32	3000	330.0	12.4	4.3	4.3	1.3	8.0	12.0	Q2

Device	Package Type	Package Drawing	Pins	SPQ	Reel Diameter (mm)	Reel Width W1 (mm)	A0 (mm)	B0 (mm)	K0 (mm)	P1 (mm)	W (mm)	Pin1 Quadrant
MSP430FR2155TRSMT	VQFN	RSM	32	250	180.0	12.4	4.25	4.25	1.15	8.0	12.0	Q2
MSP430FR2353TDBTR	TSSOP	DBT	38	2000	330.0	16.4	6.9	10.2	1.8	12.0	16.0	Q1
MSP430FR2353TPTR	LQFP	PT	48	1000	330.0	16.4	9.6	9.6	1.9	12.0	16.0	Q2
MSP430FR2353TPTR	LQFP	PT	48	1000	330.0	16.4	9.6	9.6	1.9	12.0	16.0	Q2
MSP430FR2353TRHAR	VQFN	RHA	40	2500	330.0	16.4	6.3	6.3	1.1	12.0	16.0	Q2
MSP430FR2353TRHAT	VQFN	RHA	40	250	180.0	16.4	6.3	6.3	1.1	12.0	16.0	Q2
MSP430FR2353TRSMR	VQFN	RSM	32	3000	330.0	12.4	4.25	4.25	1.15	8.0	12.0	Q2
MSP430FR2353TRSMT	VQFN	RSM	32	250	180.0	12.4	4.25	4.25	1.15	8.0	12.0	Q2
MSP430FR2355TDBTR	TSSOP	DBT	38	2000	330.0	16.4	6.9	10.2	1.8	12.0	16.0	Q1
MSP430FR2355TPTR	LQFP	PT	48	1000	330.0	16.4	9.6	9.6	1.9	12.0	16.0	Q2
MSP430FR2355TPTR	LQFP	PT	48	1000	330.0	16.4	9.6	9.6	1.9	12.0	16.0	Q2
MSP430FR2355TRHAR	VQFN	RHA	40	2500	330.0	16.4	6.3	6.3	1.1	12.0	16.0	Q2
MSP430FR2355TRHAT	VQFN	RHA	40	250	180.0	16.4	6.3	6.3	1.1	12.0	16.0	Q2
MSP430FR2355TRSMR	VQFN	RSM	32	3000	330.0	12.4	4.25	4.25	1.15	8.0	12.0	Q2
MSP430FR2355TRSMT	VQFN	RSM	32	250	180.0	12.4	4.25	4.25	1.15	8.0	12.0	Q2

TAPE AND REEL BOX DIMENSIONS

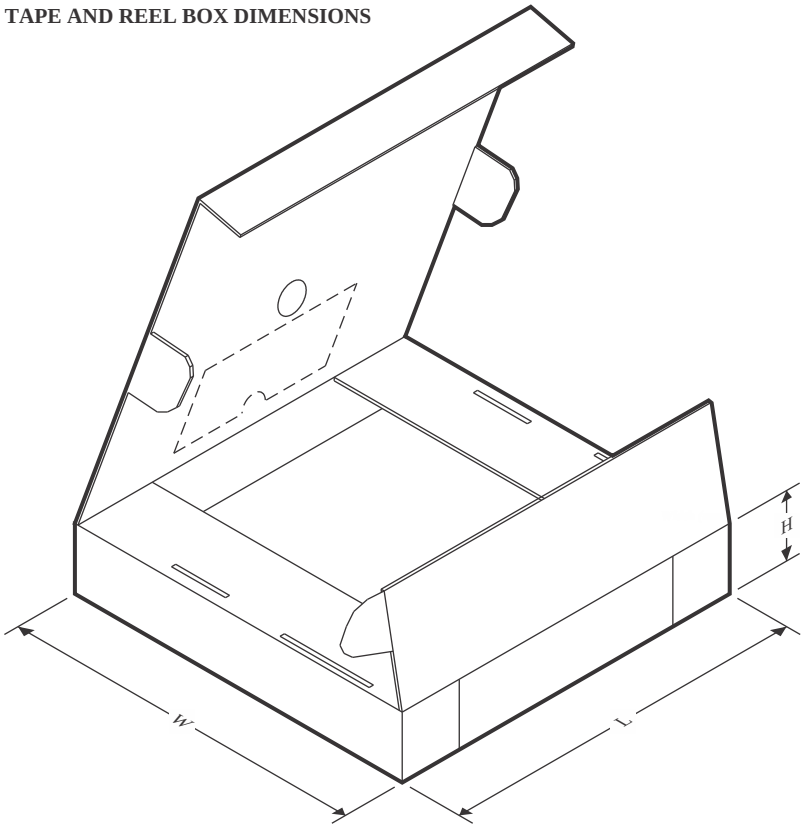

*All dimensions are nominal

Device	Package Type	Package Drawing	Pins	SPQ	Length (mm)	Width (mm)	Height (mm)
M430FR2155TRSMTG4	VQFN	RSM	32	250	210.0	185.0	35.0
M430FR2355TRSMRG4	VQFN	RSM	32	3000	367.0	367.0	35.0
MSP430FR2153TDBTR	TSSOP	DBT	38	2000	350.0	350.0	43.0
MSP430FR2153TPTR	LQFP	PT	48	1000	350.0	350.0	43.0
MSP430FR2153TPTR	LQFP	PT	48	1000	336.6	336.6	31.8
MSP430FR2153TRHAR	VQFN	RHA	40	2500	360.0	360.0	36.0
MSP430FR2153TRHAT	VQFN	RHA	40	250	210.0	185.0	35.0
MSP430FR2153TRSMR	VQFN	RSM	32	3000	367.0	367.0	35.0
MSP430FR2153TRSMT	VQFN	RSM	32	250	210.0	185.0	35.0
MSP430FR2155TDBTR	TSSOP	DBT	38	2000	350.0	350.0	43.0
MSP430FR2155TPTR	LQFP	PT	48	1000	336.6	336.6	31.8
MSP430FR2155TPTR	LQFP	PT	48	1000	350.0	350.0	43.0
MSP430FR2155TRHAR	VQFN	RHA	40	2500	360.0	360.0	36.0
MSP430FR2155TRHAT	VQFN	RHA	40	250	210.0	185.0	35.0
MSP430FR2155TRSMR	VQFN	RSM	32	3000	367.0	367.0	35.0
MSP430FR2155TRSMR	VQFN	RSM	32	3000	356.0	356.0	36.0
MSP430FR2155TRSMT	VQFN	RSM	32	250	210.0	185.0	35.0
MSP430FR2353TDBTR	TSSOP	DBT	38	2000	350.0	350.0	43.0

Device	Package Type	Package Drawing	Pins	SPQ	Length (mm)	Width (mm)	Height (mm)
MSP430FR2353TPTR	LQFP	PT	48	1000	336.6	336.6	31.8
MSP430FR2353TPTR	LQFP	PT	48	1000	350.0	350.0	43.0
MSP430FR2353TRHAR	VQFN	RHA	40	2500	360.0	360.0	36.0
MSP430FR2353TRHAT	VQFN	RHA	40	250	210.0	185.0	35.0
MSP430FR2353TRSMR	VQFN	RSM	32	3000	367.0	367.0	35.0
MSP430FR2353TRSMT	VQFN	RSM	32	250	210.0	185.0	35.0
MSP430FR2355TDBTR	TSSOP	DBT	38	2000	350.0	350.0	43.0
MSP430FR2355TPTR	LQFP	PT	48	1000	350.0	350.0	43.0
MSP430FR2355TPTR	LQFP	PT	48	1000	336.6	336.6	31.8
MSP430FR2355TRHAR	VQFN	RHA	40	2500	360.0	360.0	36.0
MSP430FR2355TRHAT	VQFN	RHA	40	250	210.0	185.0	35.0
MSP430FR2355TRSMR	VQFN	RSM	32	3000	367.0	367.0	35.0
MSP430FR2355TRSMT	VQFN	RSM	32	250	210.0	185.0	35.0

TUBE

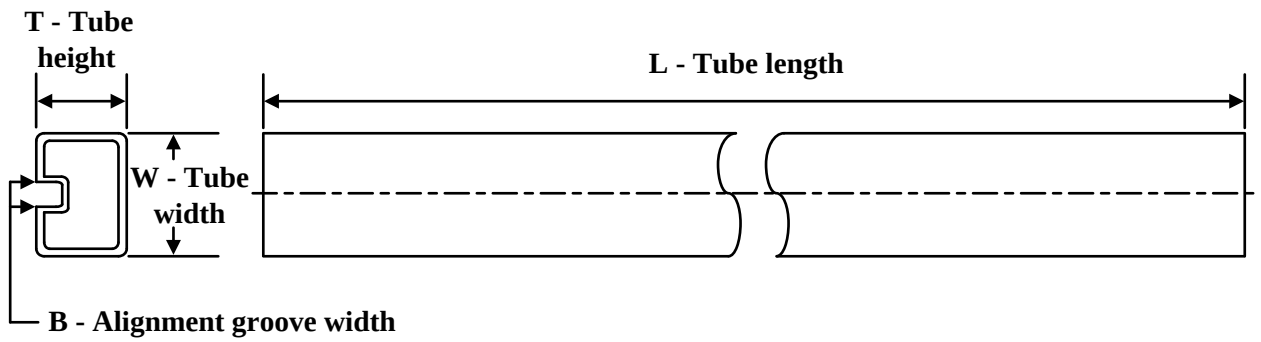

*All dimensions are nominal

Device	Package Name	Package Type	Pins	SPQ	L (mm)	W (mm)	T (µm)	B (mm)
MSP430FR2153TDBT	DBT	TSSOP	38	50	530	10.2	3600	3.5
MSP430FR2153TDBT.A	DBT	TSSOP	38	50	530	10.2	3600	3.5
MSP430FR2155TDBT	DBT	TSSOP	38	50	530	10.2	3600	3.5
MSP430FR2155TDBT.A	DBT	TSSOP	38	50	530	10.2	3600	3.5
MSP430FR2353TDBT	DBT	TSSOP	38	50	530	10.2	3600	3.5
MSP430FR2353TDBT.A	DBT	TSSOP	38	50	530	10.2	3600	3.5
MSP430FR2355TDBT	DBT	TSSOP	38	50	530	10.2	3600	3.5
MSP430FR2355TDBT.A	DBT	TSSOP	38	50	530	10.2	3600	3.5

TRAY

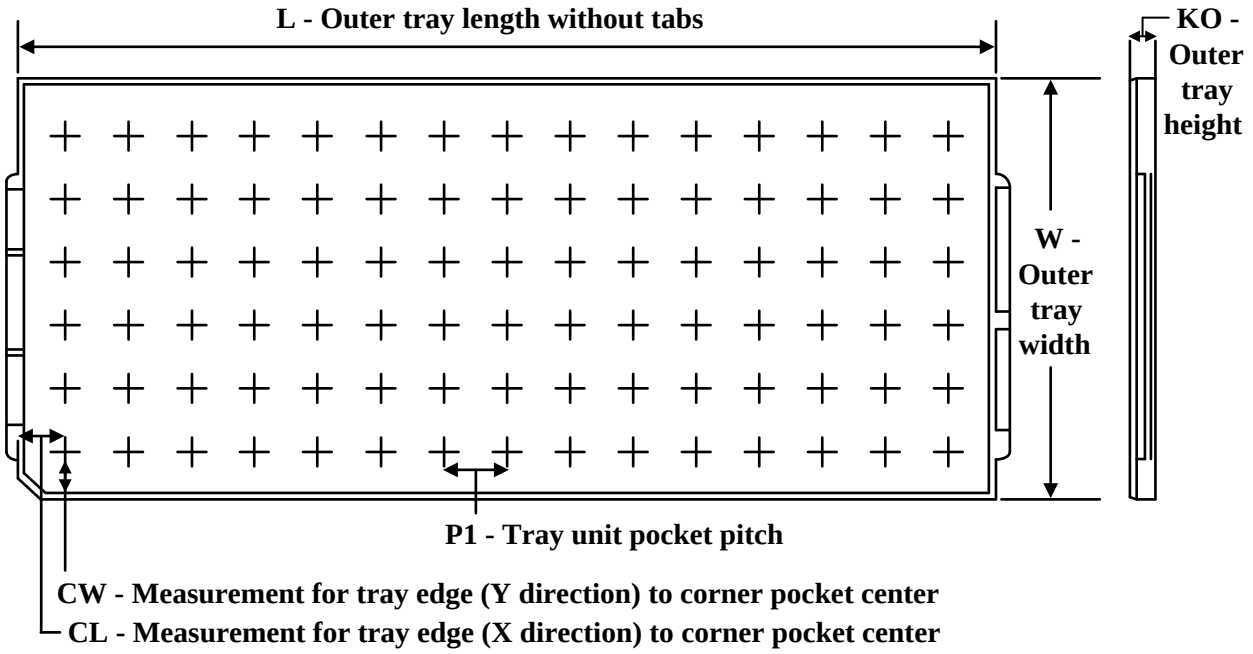

Chamfer on Tray corner indicates Pin 1 orientation of packed units.

*All dimensions are nominal

Device	Package Name	Package Type	Pins	SPQ	Unit array matrix	Max temperature (°C)	L (mm)	W (mm)	K0 (µm)	P1 (mm)	CL (mm)	CW (mm)
MSP430FR2153TPT	PT	LQFP	48	250	10 x 25	150	315	135.9	7620	12.2	11.1	11.25
MSP430FR2153TPT	PT	LQFP	48	250	10 x 25	150	315	135.9	7620	12.2	11.1	11.25
MSP430FR2153TPT.A	PT	LQFP	48	250	10 x 25	150	315	135.9	7620	12.2	11.1	11.25
MSP430FR2153TPT.A	PT	LQFP	48	250	10 x 25	150	315	135.9	7620	12.2	11.1	11.25
MSP430FR2155TPT	PT	LQFP	48	250	10 x 25	150	315	135.9	7620	12.2	11.1	11.25
MSP430FR2155TPT	PT	LQFP	48	250	10 x 25	150	315	135.9	7620	12.2	11.1	11.25
MSP430FR2155TPT.A	PT	LQFP	48	250	10 x 25	150	315	135.9	7620	12.2	11.1	11.25
MSP430FR2155TPT.A	PT	LQFP	48	250	10 x 25	150	315	135.9	7620	12.2	11.1	11.25
MSP430FR2353TPT	PT	LQFP	48	250	10 x 25	150	315	135.9	7620	12.2	11.1	11.25
MSP430FR2353TPT	PT	LQFP	48	250	10 x 25	150	315	135.9	7620	12.2	11.1	11.25
MSP430FR2353TPT.A	PT	LQFP	48	250	10 x 25	150	315	135.9	7620	12.2	11.1	11.25
MSP430FR2353TPT.A	PT	LQFP	48	250	10 x 25	150	315	135.9	7620	12.2	11.1	11.25
MSP430FR2355TPT	PT	LQFP	48	250	10 x 25	150	315	135.9	7620	12.2	11.1	11.25
MSP430FR2355TPT	PT	LQFP	48	250	10 x 25	150	315	135.9	7620	12.2	11.1	11.25
MSP430FR2355TPT.A	PT	LQFP	48	250	10 x 25	150	315	135.9	7620	12.2	11.1	11.25
MSP430FR2355TPT.A	PT	LQFP	48	250	10 x 25	150	315	135.9	7620	12.2	11.1	11.25

PACKAGE OUTLINE

DBT0038A

TSSOP - 1.2 mm max height

SMALL OUTLINE PACKAGE

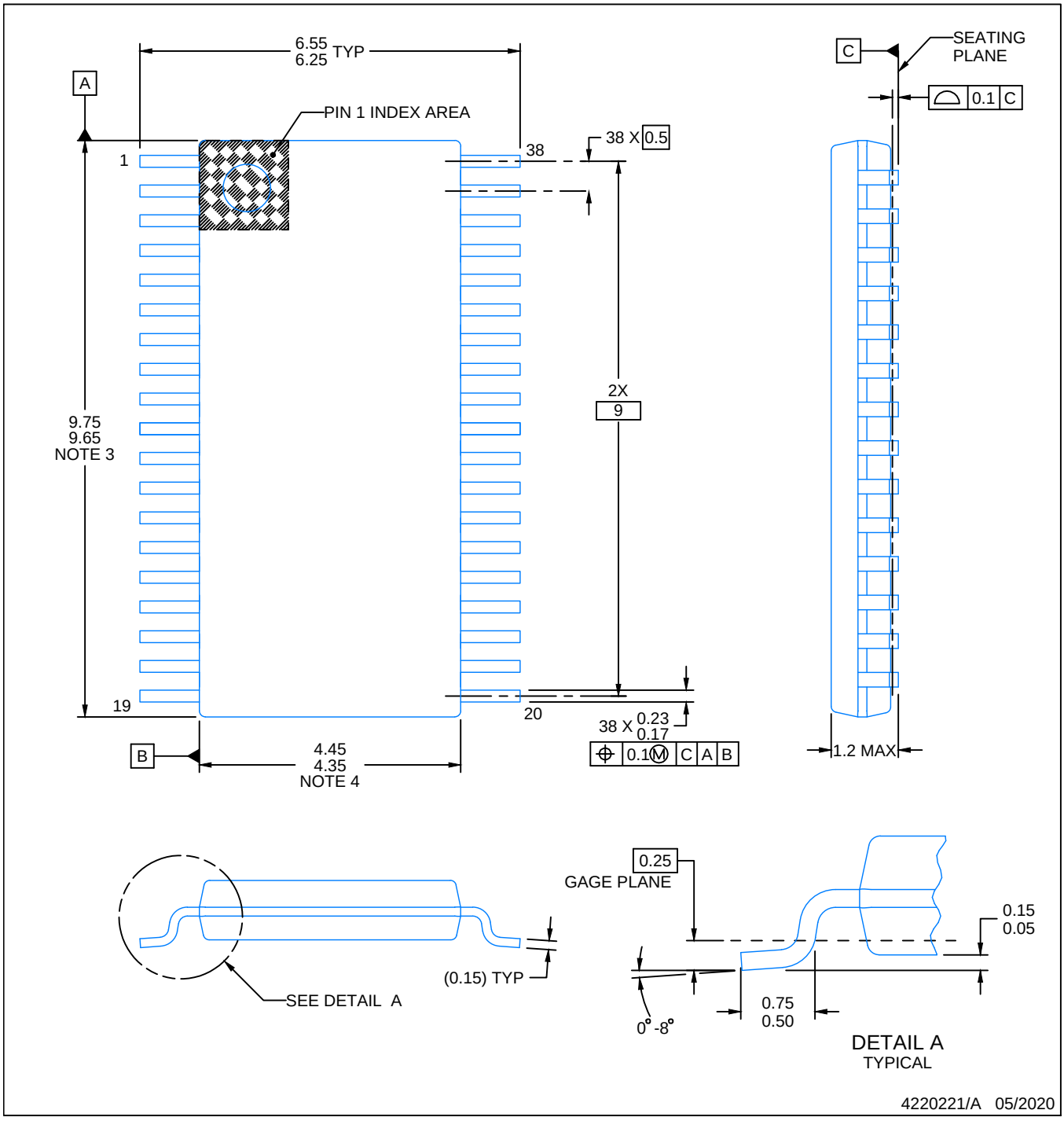

NOTES:

1. All linear dimensions are in millimeters. Any dimensions in parenthesis are for reference only. Dimensioning and tolerancing per ASME Y14.5M.
2. This drawing is subject to change without notice.
3. This dimension does not include mold flash, protrusions, or gate burrs. Mold flash, protrusions, or gate burrs shall not exceed 0.15 mm per side.
4. This dimension does not include interlead flash. Interlead flash shall not exceed 0.25 mm per side.
5. Reference JEDEC registration MO-153.

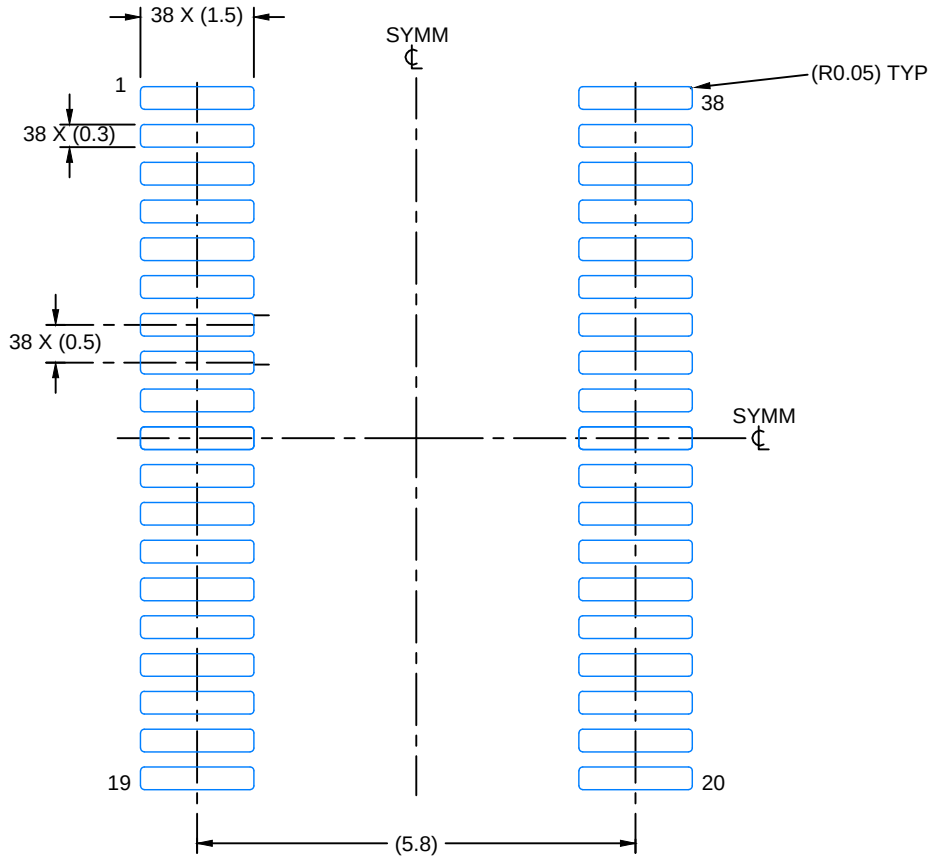

LAND PATTERN EXAMPLE
EXPOSED METAL SHOWN
SCALE: 10X

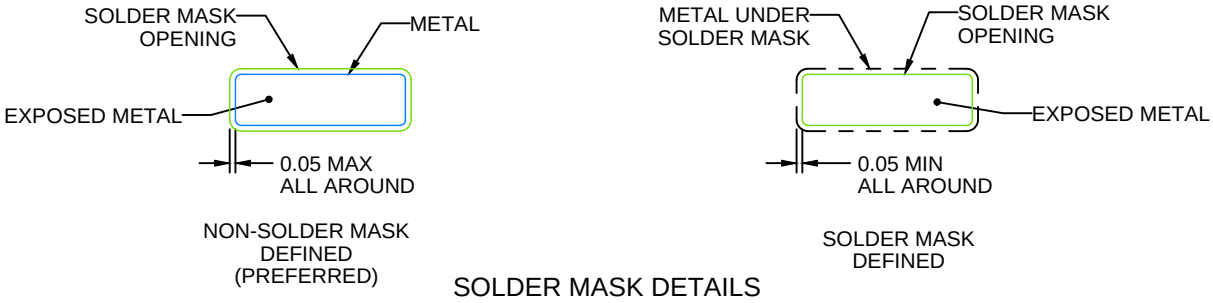

SOLDER MASK DETAILS

4220221/A 05/2020

NOTES: (continued)

6. Publication IPC-7351 may have alternate designs.
7. Solder mask tolerances between and around signal pads can vary based on board fabrication site.

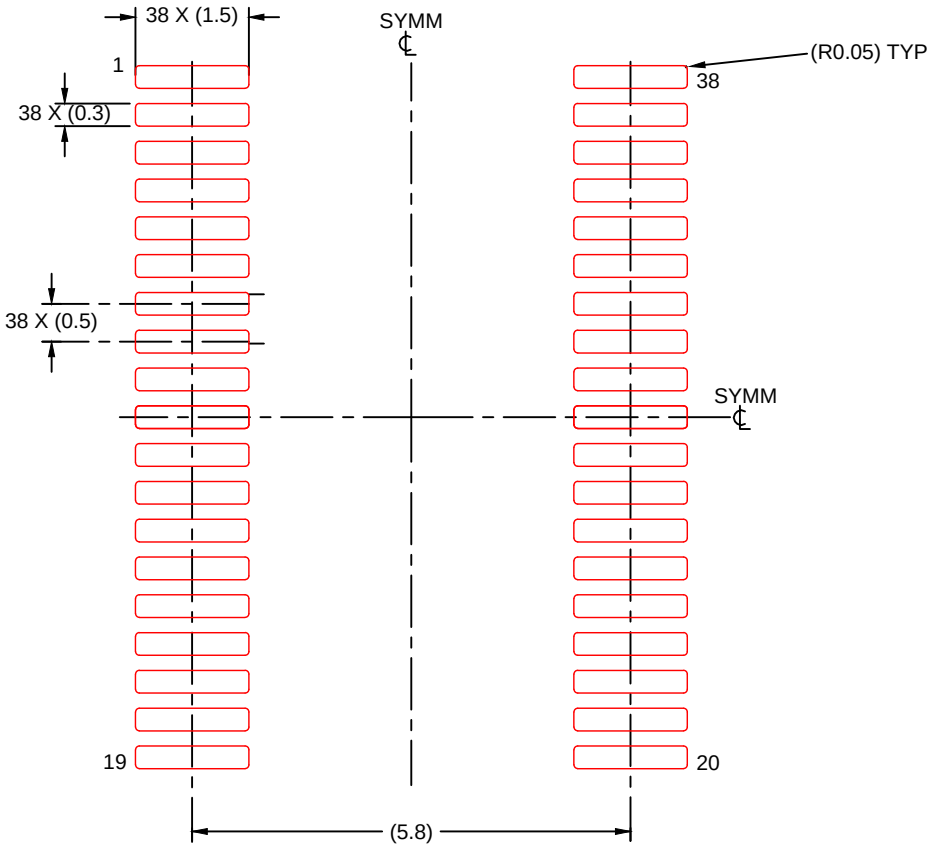

SOLDER PASTE EXAMPLE
BASED ON 0.125 mm THICK STENCIL
SCALE: 10X

4220221/A 05/2020

NOTES: (continued)

8. Laser cutting apertures with trapezoidal walls and rounded corners may offer better paste release. IPC-7525 may have alternate design recommendations.
9. Board assembly site may have different recommendations for stencil design.

GENERIC PACKAGE VIEW

RHA 40

VQFN - 1 mm max height

6 x 6, 0.5 mm pitch

PLASTIC QUAD FLATPACK - NO LEAD

This image is a representation of the package family, actual package may vary.
Refer to the product data sheet for package details.

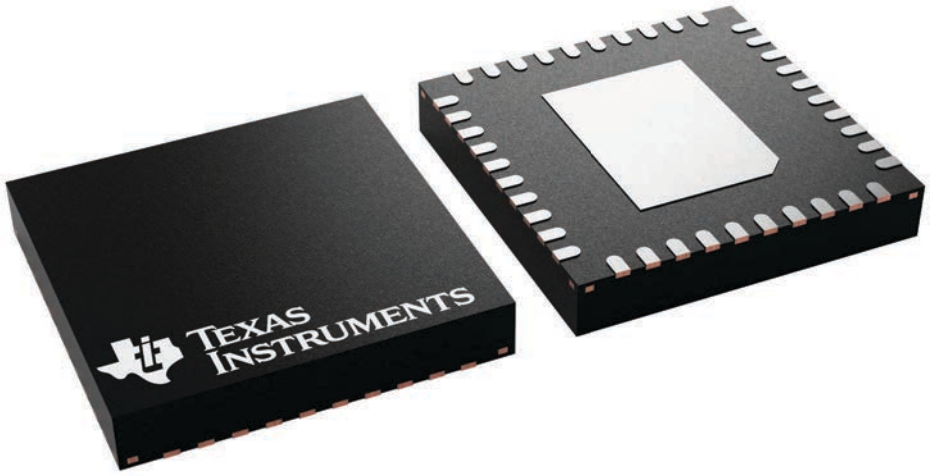

4225870/A

RHA0040E

PACKAGE OUTLINE

VQFN - 1 mm max height

PLASTIC QUAD FLATPACK - NO LEAD

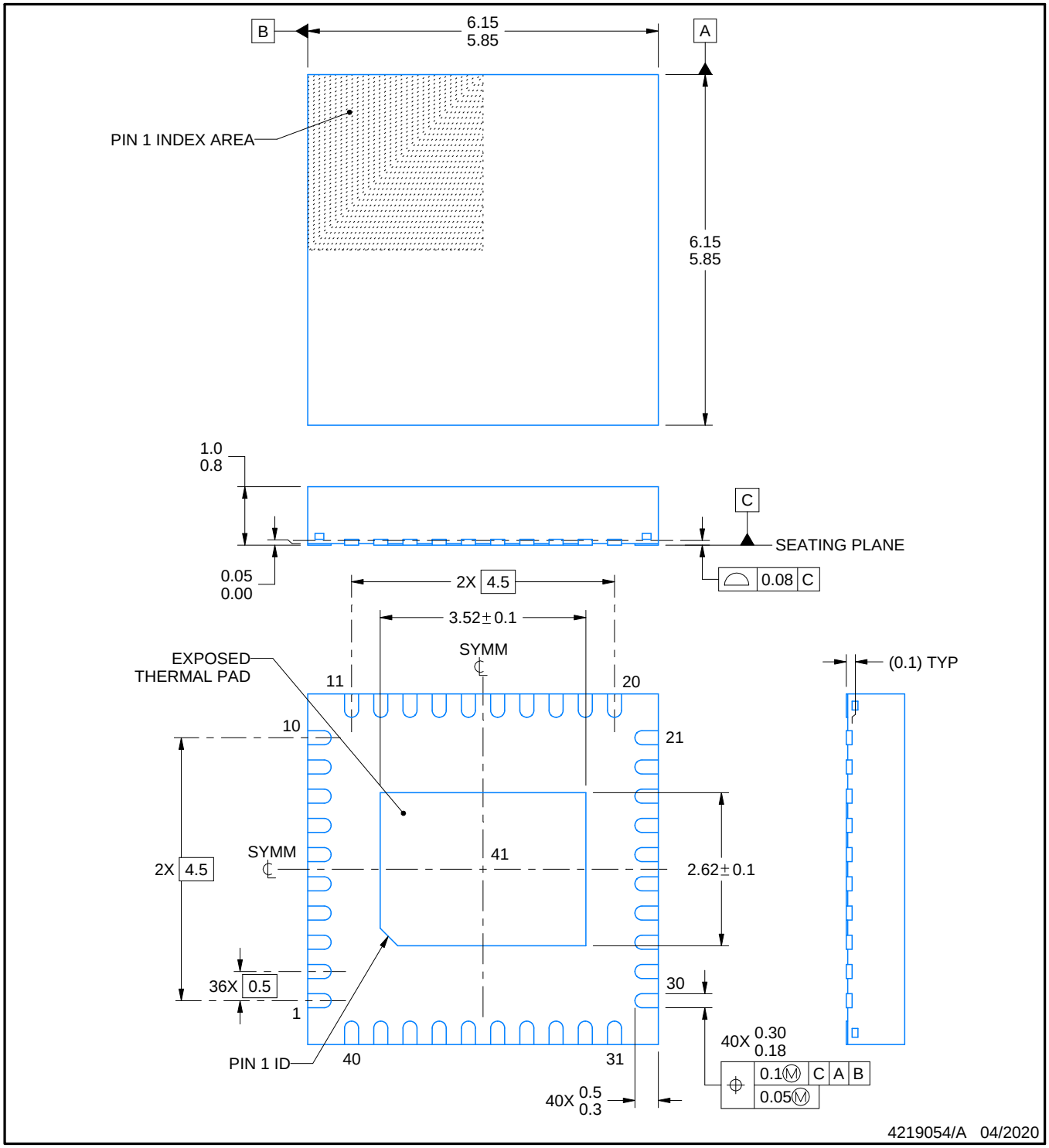

NOTES:

1. All linear dimensions are in millimeters. Any dimensions in parenthesis are for reference only. Dimensioning and tolerancing per ASME Y14.5M.
2. This drawing is subject to change without notice.
3. The package thermal pad must be soldered to the printed circuit board for thermal and mechanical performance.

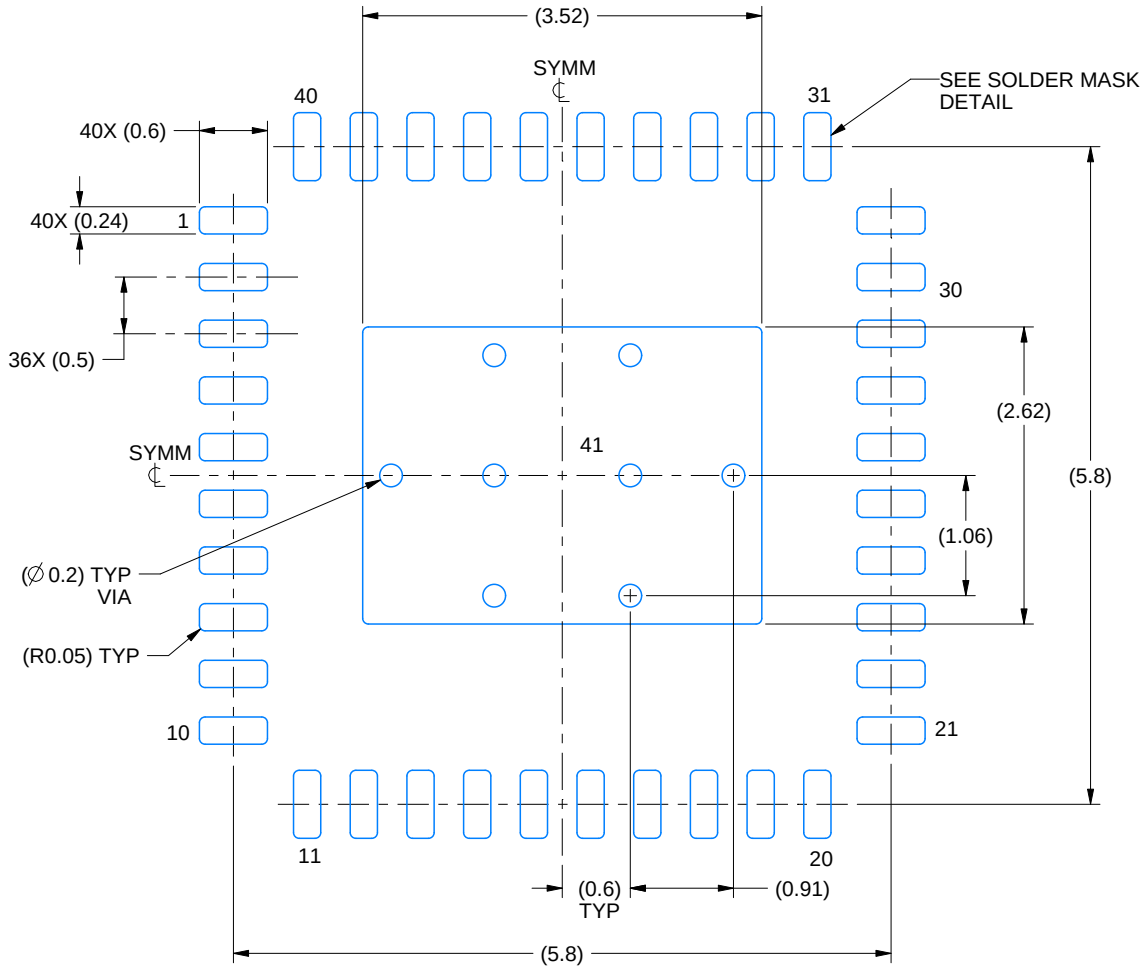

LAND PATTERN EXAMPLE
EXPOSED METAL SHOWN
SCALE: 15X

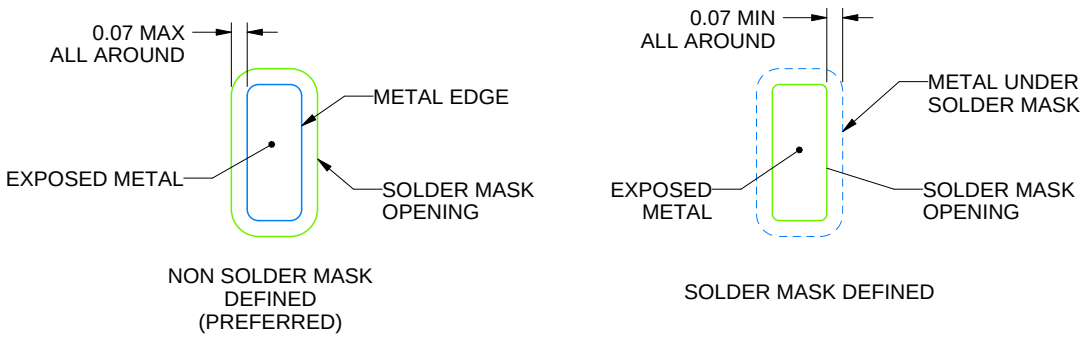

SOLDER MASK DETAILS

4219054/A 04/2020

NOTES: (continued)

4. This package is designed to be soldered to a thermal pad on the board. For more information, see Texas Instruments literature number SLUA271 (www.ti.com/lit/slua271).
5. Vias are optional depending on application, refer to device data sheet. If any vias are implemented, refer to their locations shown on this view. It is recommended that vias under paste be filled, plugged or tented.

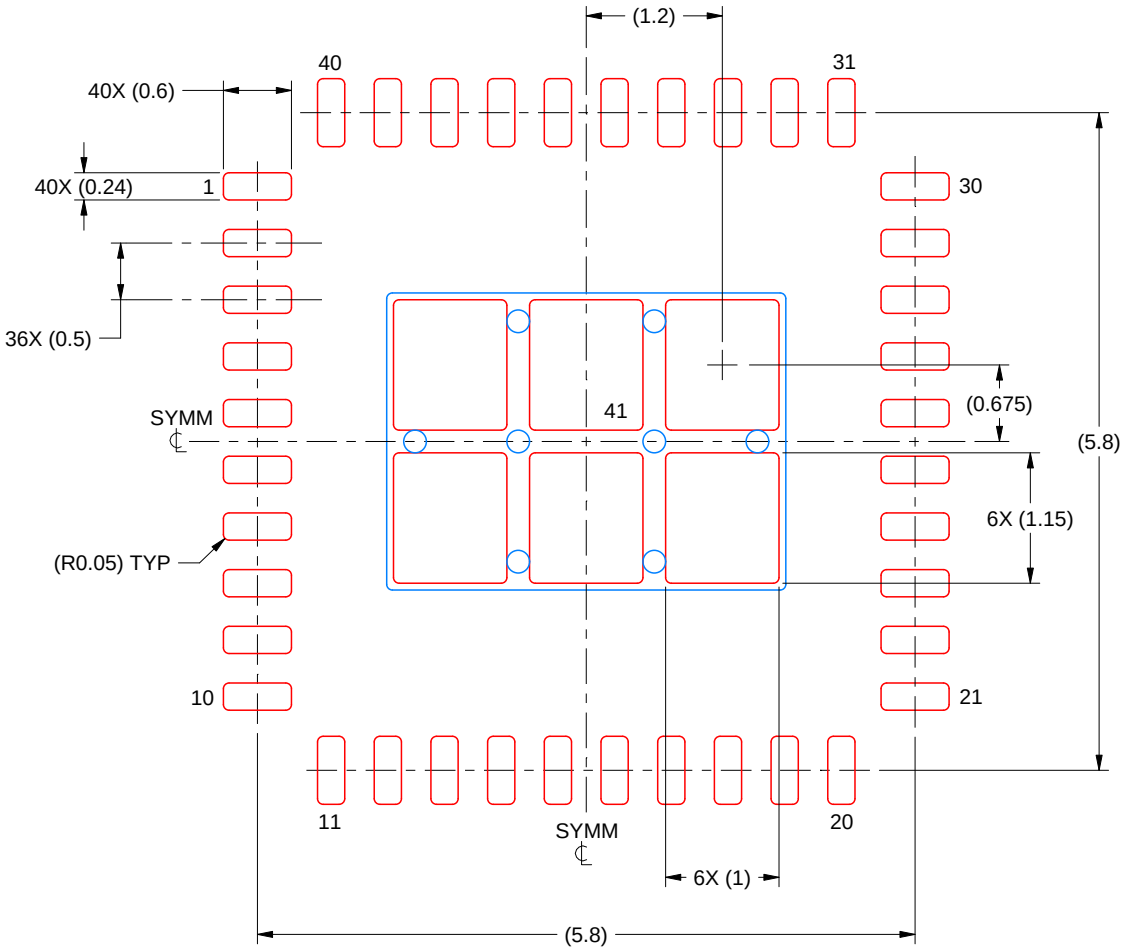

SOLDER PASTE EXAMPLE
BASED ON 0.125 MM THICK STENCIL
SCALE: 15X

EXPOSED PAD 41
75% PRINTED SOLDER COVERAGE BY AREA UNDER PACKAGE

4219054/A 04/2020

NOTES: (continued)

6. Laser cutting apertures with trapezoidal walls and rounded corners may offer better paste release. IPC-7525 may have alternate design recommendations.

GENERIC PACKAGE VIEW

RSM 32

VQFN - 1 mm max height

4 x 4, 0.4 mm pitch

PLASTIC QUAD FLATPACK - NO LEAD

This image is a representation of the package family, actual package may vary.
Refer to the product data sheet for package details.

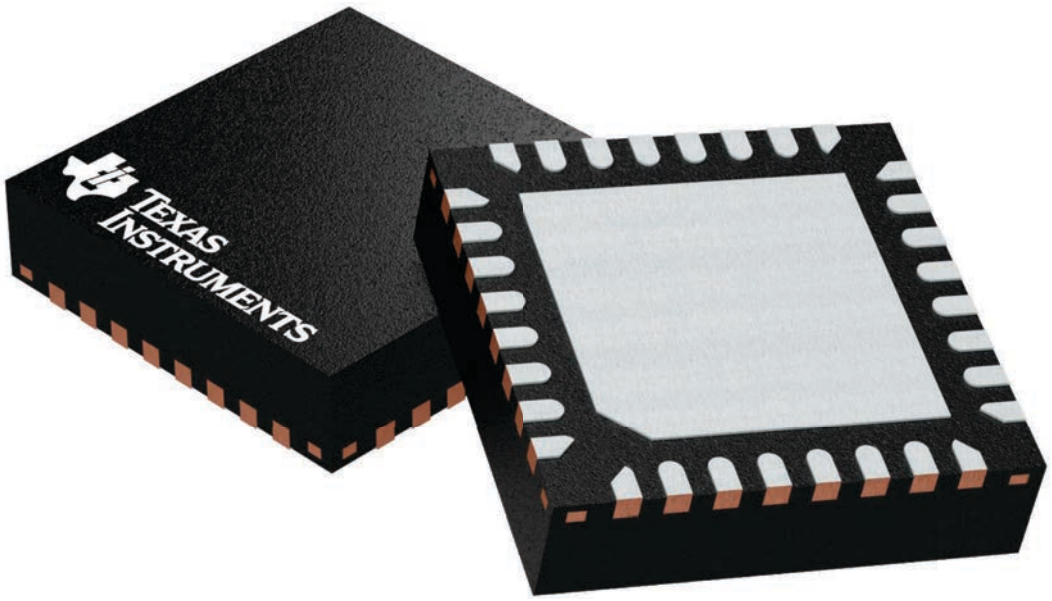

4224982/A

PACKAGE OUTLINE

RSM0032B

VQFN - 1 mm max height

PLASTIC QUAD FLATPACK - NO LEAD

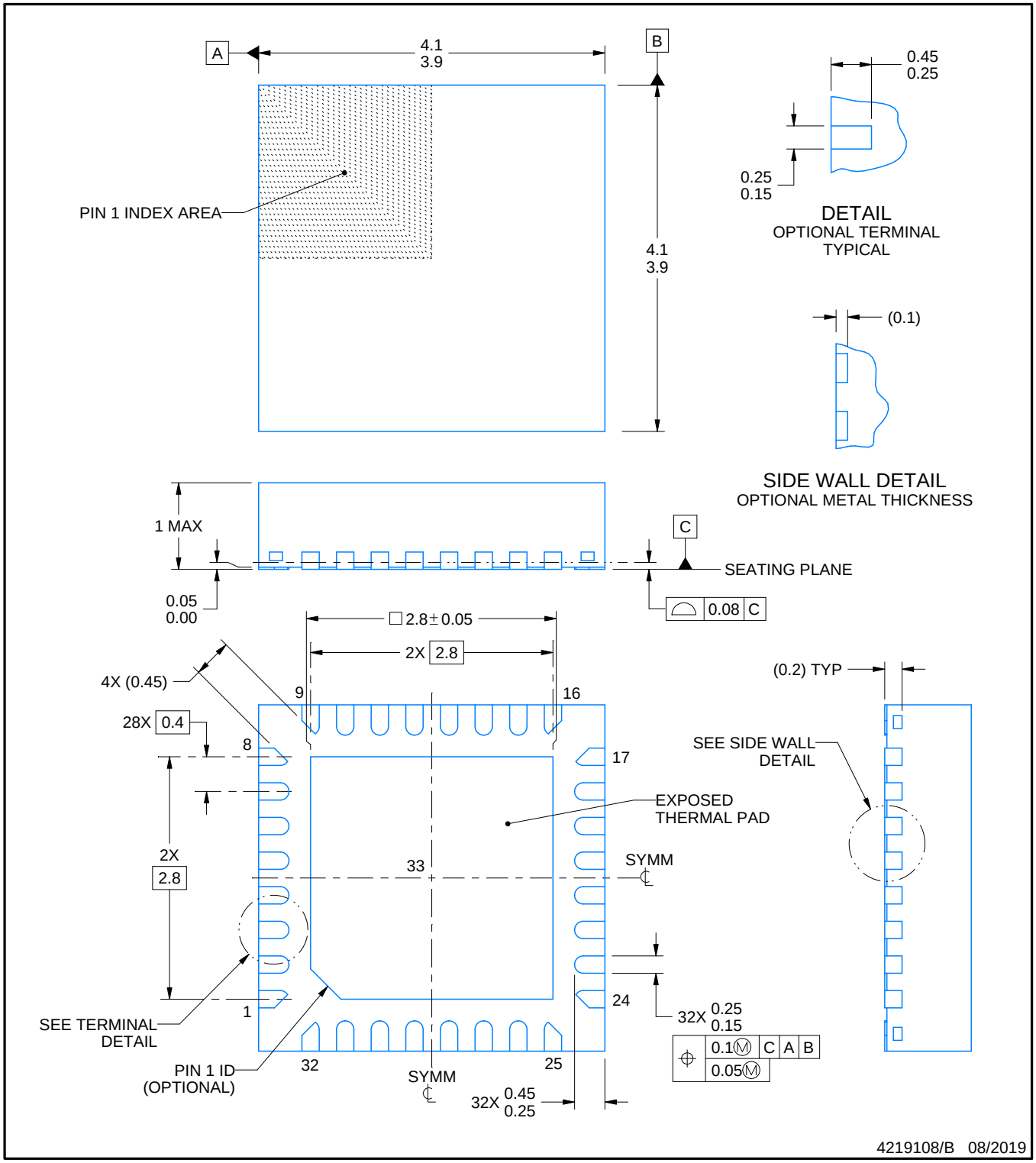

NOTES:

1. All linear dimensions are in millimeters. Any dimensions in parenthesis are for reference only. Dimensioning and tolerancing per ASME Y14.5M.
2. This drawing is subject to change without notice.
3. The package thermal pad must be soldered to the printed circuit board for thermal and mechanical performance.

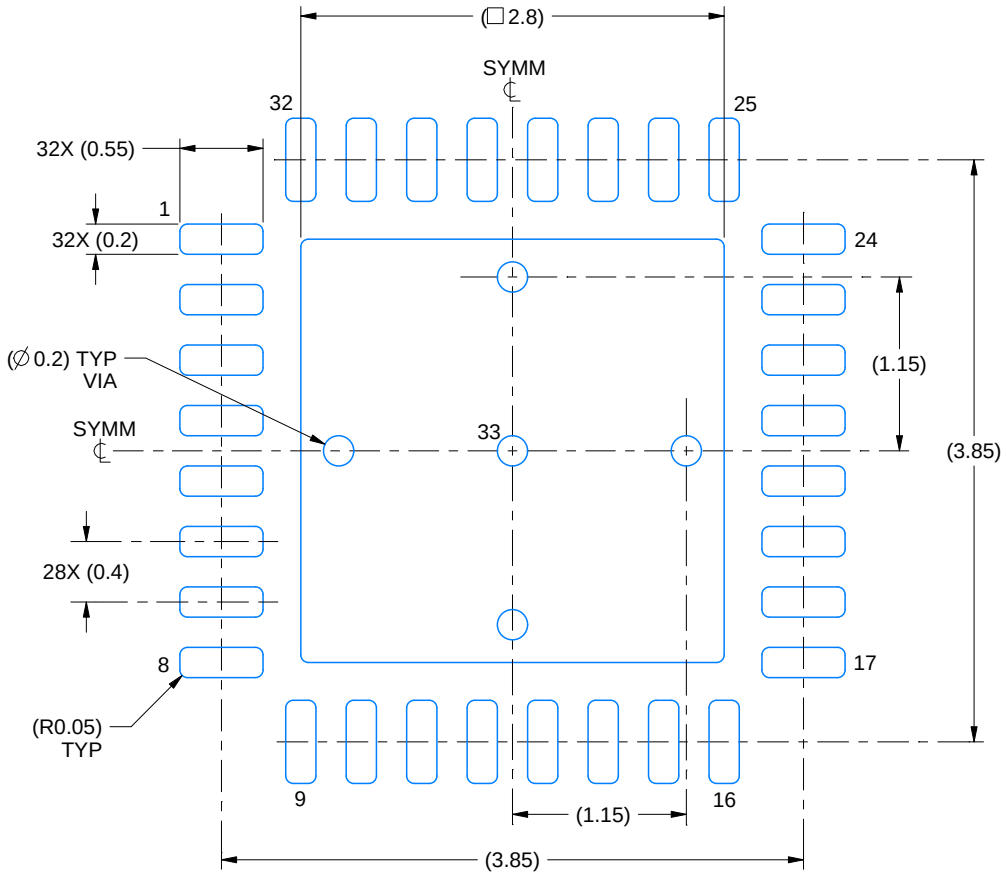

LAND PATTERN EXAMPLE
EXPOSED METAL SHOWN
SCALE:20X

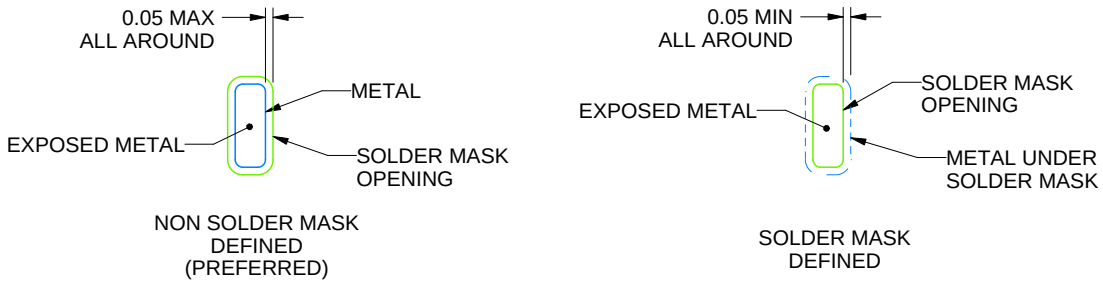

SOLDER MASK DETAILS

4219108/B 08/2019

NOTES: (continued)

4. This package is designed to be soldered to a thermal pad on the board. For more information, see Texas Instruments literature number SLUA271 (www.ti.com/lit/slua271).
5. Vias are optional depending on application, refer to device data sheet. If any vias are implemented, refer to their locations shown on this view. It is recommended that vias under paste be filled, plugged or tented.

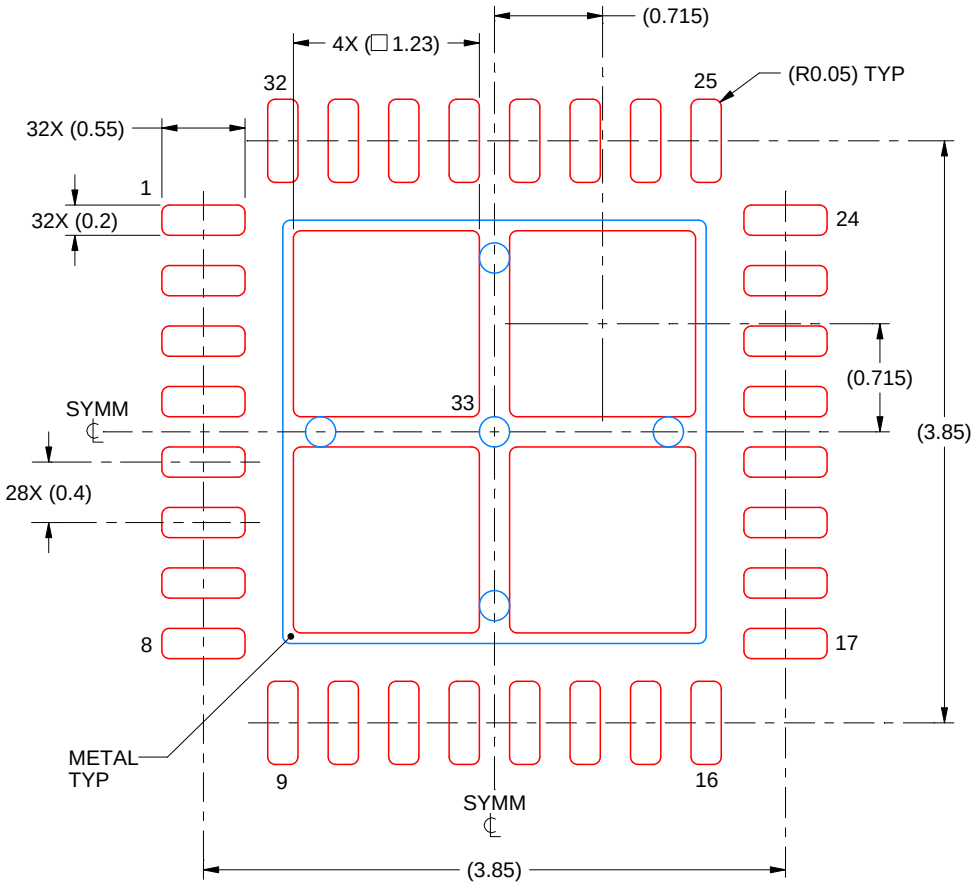

SOLDER PASTE EXAMPLE
BASED ON 0.1 mm THICK STENCIL

EXPOSED PAD 33:
77% PRINTED SOLDER COVERAGE BY AREA UNDER PACKAGE
SCALE:20X

4219108/B 08/2019

NOTES: (continued)

6. Laser cutting apertures with trapezoidal walls and rounded corners may offer better paste release. IPC-7525 may have alternate design recommendations.

PACKAGE OUTLINE

PT0048A

LQFP - 1.6 mm max height

LOW PROFILE QUAD FLATPACK

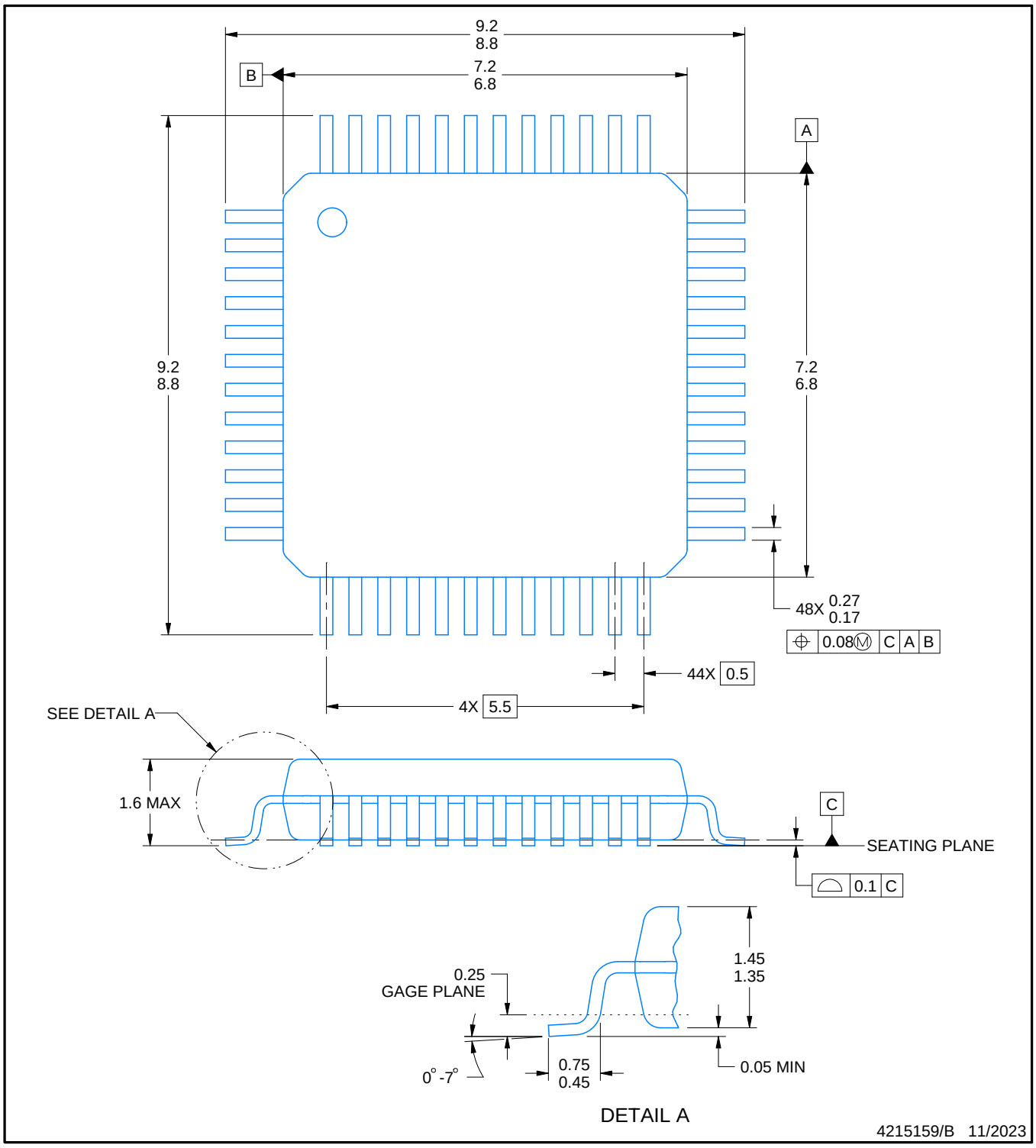

NOTES:

1. All linear dimensions are in millimeters. Any dimensions in parenthesis are for reference only. Dimensioning and tolerancing per ASME Y14.5M.
2. This drawing is subject to change without notice.
3. Reference JEDEC registration MS-026.
4. This may also be a thermally enhanced plastic package with leads conected to the die pads.

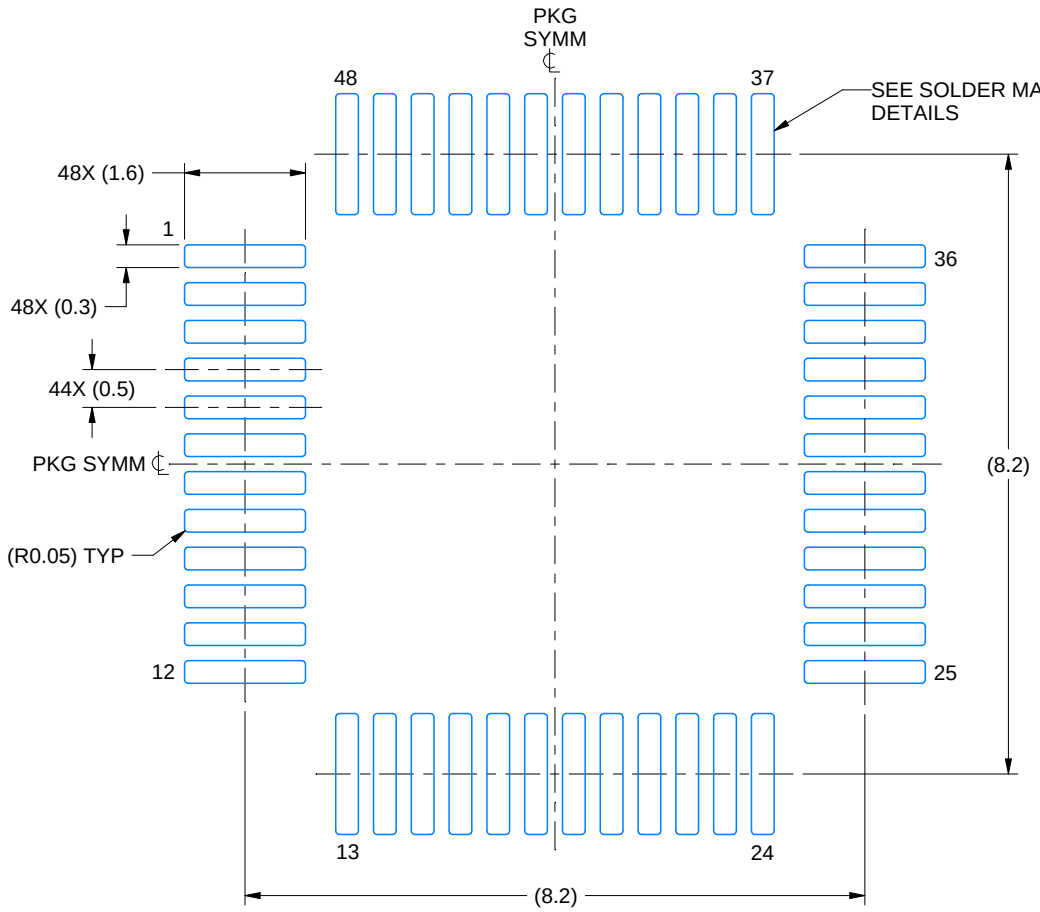

LAND PATTERN EXAMPLE
EXPOSED METAL SHOWN
SCALE 10.000

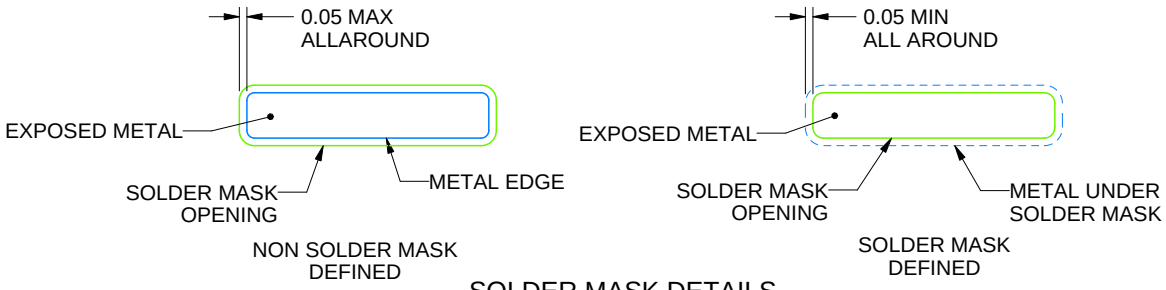

SOLDER MASK DETAILS

4215159/B 11/2023

NOTES: (continued)

5. Publication IPC-7351 may have alternate designs.
6. Solder mask tolerances between and around signal pads can vary based on board fabrication site.

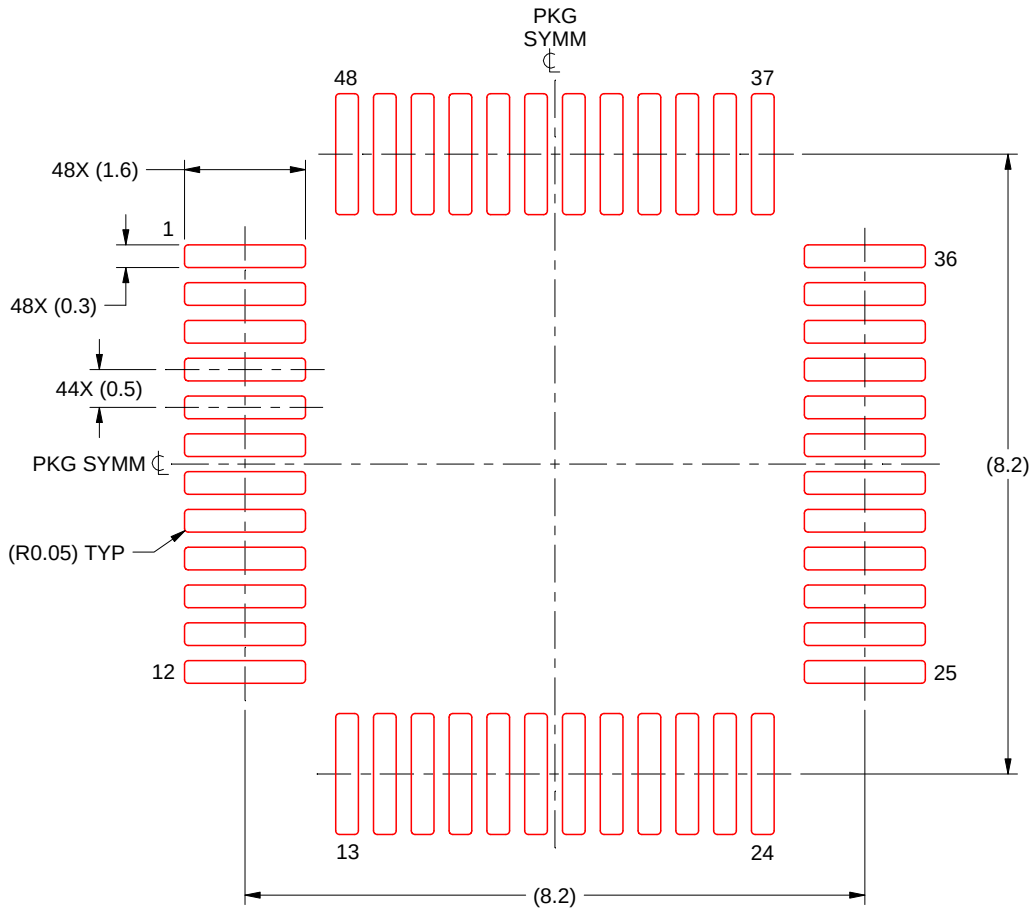

SOLDER PASTE EXAMPLE
BASED ON 0.1 mm THICK STENCIL
SCALE: 10X

4215159/B 11/2023

NOTES: (continued)

7. Laser cutting apertures with trapezoidal walls and rounded corners may offer better paste release. IPC-7525 may have alternate design recommendations.
8. Board assembly site may have different recommendations for stencil design.

重要通知和免责声明

TI“按原样”提供技术和可靠性数据（包括数据表）、设计资源（包括参考设计）、应用或其他设计建议、网络工具、安全信息和其他资源，不保证没有瑕疵且不做出任何明示或暗示的担保，包括但不限于对适销性、与某特定用途的适用性或不侵犯任何第三方知识产权的暗示担保。

这些资源可供使用 TI 产品进行设计的熟练开发人员使用。您将自行承担以下全部责任：(1) 针对您的应用选择合适的 TI 产品，(2) 设计、验证并测试您的应用，(3) 确保您的应用满足相应标准以及任何其他安全、安保法规或其他要求。

这些资源如有变更，恕不另行通知。TI 授权您仅可将这些资源用于研发本资源所述的 TI 产品的相关应用。严禁以其他方式对这些资源进行复制或展示。您无权使用任何其他 TI 知识产权或任何第三方知识产权。对于因您对这些资源的使用而对 TI 及其代表造成的任何索赔、损害、成本、损失和债务，您将全额赔偿，TI 对此概不负责。

TI 提供的产品受 TI 销售条款)、TI 通用质量指南 或 ti.com 上其他适用条款或 TI 产品随附的其他适用条款的约束。TI 提供这些资源并不会扩展或以其他方式更改 TI 针对 TI 产品发布的适用的担保或担保免责声明。 除非德州仪器 (TI) 明确将某产品指定为定制产品或客户特定产品，否则其产品均为按确定价格收入目录的标准通用器件。

TI 反对并拒绝您可能提出的任何其他或不同的条款。

版权所有 © 2026，德州仪器 (TI) 公司

最后更新日期：2025 年 10 月