# MCP629x 10MHz 轨至轨运算放大器

## 1 特性

- 增益带宽积产品：典型值 10MHz
- 工作电源电压范围：2.4V 至 5.5V
- 轨至轨输入/输出
- 低输入偏置电流：1pA
- 低静态电流：0.6mA
- 输入电压噪声：8.7nV/√Hz（f = 10kHz 时）
- 内部射频和 EMI 滤波器
- 工作温度范围：–40°C 至 125°C
- 单位增益稳定
- 由于具有电阻式开环输出阻抗，因此可在更高的容性负载下更轻松地实现稳定

## 2 应用

- 电源模块
- 烟雾探测器
- HVAC：暖通空调
- 电池供电 应用
- 传感器信号调节
- 光电二极管放大器
- 模拟滤波器
- 医疗仪器
- 笔记本电脑和 PDA
- 条形码扫描仪
- 音频接收器
- 汽车信息娱乐系统

低侧电机控制

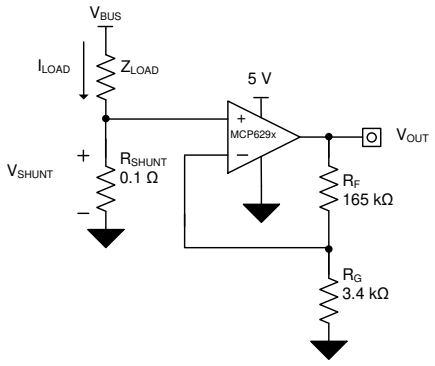


## 3 说明

MCP6291（单通道）、MCP6292（双通道）和 MCP6294（四通道）器件组成了一个通用低功耗运算放大器系列。具有轨至轨 输入和输出摆幅、低静态电流（每通道的典型值为 600µA）、10MHz 的较宽带宽和低噪声（10kHz 时为 8.7nV/√Hz）等特性，因此对于需要在成本与性能间实现良好平衡的各类 应用需求， 本系列器件非常有吸引力。其低输入偏置电流使该系列器件适合用于带有高源阻抗的 应用 。

MCP629x 采用稳健耐用的设计，方便电路设计人员使用。该器件具有单位增益稳定的集成 RFI 和 EMI 抑制滤波器，在过驱条件下不会出现反相并且具有高静电放电 (ESD) 保护（4kV 人体模型 (HBM)）。

MCP629x 系列的工作温度范围为 –40°C 至 125°C。该系列器件的电源电压范围为 2.4V 至 5.5V。

器件信息(1)

| 器件型号 | 封装 | 封装尺寸（标称值） |
|---|---|---|
| MCP6291 | SOT-23 (5) | 1.60mm × 2.90mm |
| | SC70 (5) | 1.25mm × 2.00mm |
| MCP6292 | SOIC (8) | 3.91mm × 4.90mm |
| | VSSOP (8) | 3.00mm × 3.00mm |
| | SOT-23 (8) | 1.60mm × 2.90mm |
| MCP6294 | SOIC (14) | 8.65mm × 3.91mm |
| | TSSOP (14) | 4.40mm × 5.00mm |

(1) 如需了解所有可用封装，请参阅数据表末尾的可订购产品附录。

小信号过冲与负载电容间的关系

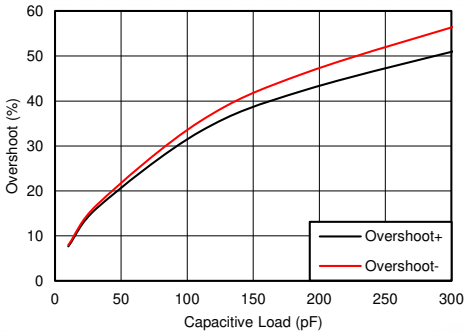


本文档旨在为方便起见，提供有关 TI 产品中文版本的信息，以确认产品的概要。 有关适用的官方英文版本的最新信息，请访问 www.ti.com，其内容始终优先。 TI 不保证翻译的准确性和有效性。 在实际设计之前，请务必参考最新版本的英文版本。

# 目录

**1** 特性 ... 1
**2** 应用 ... 1
**3** 说明 ... 1
**4** 修订历史记录 ... 2
**5** **Device Comparison Table** ... 4
**6** **Pin Configuration and Functions** ... 5
**7** **Specifications** ... 8
7.1 Absolute Maximum Ratings ... 8
7.2 ESD Ratings ... 8
7.3 Recommended Operating Conditions ... 8
7.4 Thermal Information: MCP6291 ... 8
7.5 Thermal Information: MCP6292 ... 9
7.6 Thermal Information: MCP6294 ... 9
7.7 Electrical Characteristics: $V_S$ (Total Supply Voltage) = (V+) – (V–) = 2.4 V to 5.5 V ... 10
7.8 Typical Characteristics ... 12
**8** **Detailed Description** ... 18
8.1 Overview ... 18
8.2 Functional Block Diagram ... 18
8.3 Feature Description ... 19
8.4 Device Functional Modes ... 19
**9** **Application and Implementation** ... 20
9.1 Application Information ... 20
9.2 Typical Application ... 20
**10** **Power Supply Recommendations** ... 22
10.1 Input and ESD Protection ... 22
**11** **Layout** ... 23
11.1 Layout Guidelines ... 23
11.2 Layout Example ... 23
**12** 器件和文档支持 ... 24
12.1 文档支持 ... 24
12.2 相关链接 ... 24
12.3 接收文档更新通知 ... 24
12.4 社区资源 ... 24
12.5 商标 ... 24
12.6 静电放电警告 ... 24
12.7 Glossary ... 24
**13** 机械、封装和可订购信息 ... 24

## 4 修订历史记录

**Changes from Revision C (January 2019) to Revision D** **Page**

- 已添加 向数据表添加了 SOT-23 (8) (DDF) 封装 ... 1

**Changes from Revision B (April 2018) to Revision C** **Page**

- 已删除 从*器件信息* 表中删除了 SOT-23 封装预览符号 ... 1
- 已添加 向*器件信息* 表添加了 SC70 封装 ... 1
- Added DCK package information to *Device Comparison Table* ... 4
- Deleted DBV package preview notation from *Pin Configuration and Functions* section ... 5
- Added DCK package drawing and pin functions to *Pin Configuration and Functions* section ... 5
- Added DBV (SOT-23) and DCK (SC70) thermal information ... 8

**Changes from Revision A (October 2017) to Revision B** **Page**

- Added DGK package to *Thermal Information* table ... 9

**Changes from Original (July 2017) to Revision A** **Page**

- 已删除 删除了*器件信息* 表中的 MCP6291 SC70、SOT-553 和 SOIC 封装 ... 1
- 已删除 删除了*器件信息* 表中的 MCP6292 WSON 和 VSSOP (10) 封装 ... 1
- 已更改 将*器件信息* 表中的 MCP6294 14 引脚 SOIC 封装从预览更改为生产数据 ... 1
- Deleted DCK, DRL, DSG, RTE and 8-pin D packages from *Device Comparison* table ... 4
- Deleted DRL (SOT-533) package from MCP6291 pinout image and table in *Pin Configuration and Functions* section ... 5
- Deleted MCP6291 DCK (SC70) and D (SOIC) package pinout drawings and pin information from *Pin Configuration and Functions* section ... 5
- Deleted MCP6292 DSG (WSON) and DGS (VSSOP) package pinout drawings and pin table information in *Pin Configuration and Functions* section ... 6


Copyright © 2017–2019, Texas Instruments Incorporated

- Deleted package preview note from MCP6294 pinout drawing in *Pin Configuration and Functions* section ..... 7
- Added MCP6294 *Thermal Information* table ..... 9

Copyright © 2017–2019, Texas Instruments Incorporated

# 5 Device Comparison Table

| DEVICE | NO. OF CHANNELS | PACKAGE LEADS | | | | | |
|---|---|---|---|---|---|---|---|
| | | DBV | DCK | D | DGK | PW | DDF |
| MCP6291 | 1 | 5 | 5 | — | — | — | — |
| MCP6292 | 2 | — | — | 8 | 8 | — | 8 |
| MCP6294 | 4 | — | — | 14 | — | 14 | — |


Copyright © 2017–2019, Texas Instruments Incorporated

# 6 Pin Configuration and Functions

**MCP6291 DBV Package**
**5-Pin SOT-23**
**Top View**

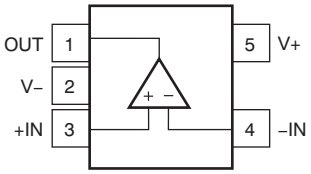


**MCP6291 DCK Package**
**5-Pin SC70**
**Top View**

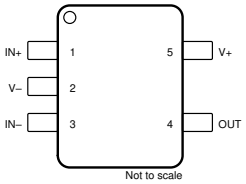


**Pin Functions: MCP6921**

| PIN | | | I/O | DESCRIPTION |
|---|---|---|---|---|
| NAME | NO. | | | |
| | SOT-23 (DBV) | SC70 (DCK) | | |
| –IN | 4 | 3 | I | Inverting input |
| +IN | 3 | 1 | I | Noninverting input |
| OUT | 1 | 4 | O | Output |
| V– | 2 | 8 | — | Negative (lowest) supply or ground (for single-supply operation) |
| V+ | 5 | 5 | — | Positive (highest) supply |

Copyright © 2017–2019, Texas Instruments Incorporated

**MCP6292 D, DGK, DDF Packages**
**8-Pin SOIC, VSSOP**
**Top View**

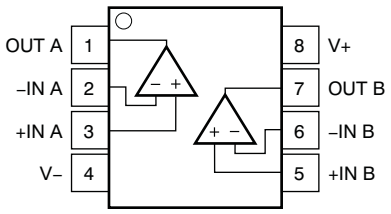


## Pin Functions: MCP6292

| PIN | | I/O | DESCRIPTION |
|---|---|---|---|
| NAME | NO. | | |
| –IN A | 2 | I | Inverting input, channel A |
| +IN A | 3 | I | Noninverting input, channel A |
| –IN B | 6 | I | Inverting input, channel B |
| +IN B | 5 | I | Noninverting input, channel B |
| OUT A | 1 | O | Output, channel A |
| OUT B | 7 | O | Output, channel B |
| V– | 4 | — | Negative (lowest) supply or ground (for single-supply operation) |
| V+ | 8 | — | Positive (highest) supply |


Copyright © 2017–2019, Texas Instruments Incorporated

**MCP6294 D, PW Packages**
**14-Pin SOIC, TSSOP**
**Top View**

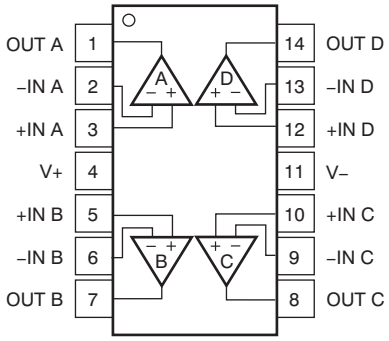


## Pin Functions: MCP6294

| PIN | | I/O | DESCRIPTION |
|---|---|---|---|
| NAME | NO. | | |
| –IN A | 2 | I | Inverting input, channel A |
| +IN A | 3 | I | Noninverting input, channel A |
| –IN B | 6 | I | Inverting input, channel B |
| +IN B | 5 | I | Noninverting input, channel B |
| –IN C | 9 | I | Inverting input, channel C |
| +IN C | 10 | I | Noninverting input, channel C |
| –IN D | 13 | I | Inverting input, channel D |
| +IN D | 12 | I | Noninverting input, channel D |
| OUT A | 1 | O | Output, channel A |
| OUT B | 7 | O | Output, channel B |
| OUT C | 8 | O | Output, channel C |
| OUT D | 14 | O | Output, channel D |
| V– | 11 | — | Negative (lowest) supply or ground (for single-supply operation) |
| V+ | 4 | — | Positive (highest) supply |

Copyright © 2017–2019, Texas Instruments Incorporated

# 7 Specifications

## 7.1 Absolute Maximum Ratings

over operating free-air temperature (unless otherwise noted)(1)

| | | | MIN | MAX | UNIT |
|---|---|---|---|---|---|
| Supply voltage | | | | 6 | V |
| Signal input pins | Voltage(2) | Common-mode | (V–) – 0.5 | (V+) + 0.5 | V |
| | | Differential | | (V+) – (V–) + 0.2 | |
| | Current(2) | | –10 | 10 | mA |
| Output short-circuit(3) | | | Continuous | | mA |
| Specified, $T_A$ | | | –40 | 125 | °C |
| Junction, $T_J$ | | | | 150 | °C |
| Storage, $T_{stg}$ | | | –65 | 150 | °C |

(1) Stresses beyond those listed under *Absolute Maximum Ratings* may cause permanent damage to the device. These are stress ratings only, and functional operation of the device at these or any other conditions beyond those indicated under *Recommended Operating Conditions* is not implied. Exposure to absolute-maximum-rated conditions for extended periods may affect device reliability.
(2) Input pins are diode-clamped to the power-supply rails. Current limit input signals that can swing more than 0.5 V beyond the supply rails to 10 mA or less.
(3) Short-circuit to ground, one amplifier per package.

## 7.2 ESD Ratings

over operating free-air temperature range (unless otherwise noted)

| | | | VALUE | UNIT |
|---|---|---|---|---|
| $V_{(ESD)}$ | Electrostatic discharge | Human-body model (HBM), per ANSI/ESDA/JEDEC JS-001(1) | ±4000 | V |
| | | Charged-device model (CDM), per JEDEC specification JESD22-C101(2) | ±1500 | |

(1) JEDEC document JEP155 states that 500-V HBM allows safe manufacturing with a standard ESD control process.
(2) JEDEC document JEP157 states that 250-V CDM allows safe manufacturing with a standard ESD control process.

## 7.3 Recommended Operating Conditions

over operating free-air temperature range (unless otherwise noted)

| | | MIN | MAX | UNIT |
|---|---|---|---|---|
| $V_S$ | Supply voltage | 2.4 | 5.5 | V |
| | Specified temperature | –40 | 125 | °C |

## 7.4 Thermal Information: MCP6291

| THERMAL METRIC(1) | | MCP6291 | | UNIT |
|---|---|---|---|---|
| | | DBV (SOT-23) | DCK (SC70) | |
| | | 5 PINS | 5 PINS | |
| $R_{\theta JA}$ | Junction-to-ambient thermal resistance | 221.7 | 263.3 | °C/W |
| $R_{\theta JC(top)}$ | Junction-to-case(top) thermal resistance | 144.7 | 75.5 | °C/W |
| $R_{\theta JB}$ | Junction-to-board thermal resistance | 49.7 | 51.0 | °C/W |
| $\psi_{JT}$ | Junction-to-top characterization parameter | 26.1 | 1.0 | °C/W |
| $\psi_{JB}$ | Junction-to-board characterization parameter | 49.0 | 50.3 | °C/W |

(1) For more information about traditional and new thermal metrics, see the *Semiconductor and IC Package Thermal Metrics* application report.


Copyright © 2017–2019, Texas Instruments Incorporated

## 7.5 Thermal Information: MCP6292

| THERMAL METRIC(1) | | MCP6292 | | | UNIT |
|---|---|---|---|---|---|
| | | D (SOIC) | DGK (VSSOP) | DDF (SOT-23) | |
| | | 8 PINS | 8 PINS | 8 PINS | |
| $R_{\theta JA}$ | Junction-to-ambient thermal resistance | 157.6 | 201.2 | 184.4 | °C/W |
| $R_{\theta JC(top)}$ | Junction-to-case (top) thermal resistance | 104.6 | 85.7 | 112.8 | °C/W |
| $R_{\theta JB}$ | Junction-to-board thermal resistance | 99.7 | 122.9 | 99.9 | °C/W |
| $\psi_{JT}$ | Junction-to-top characterization parameter | 55.6 | 21.2 | 18.7 | °C/W |
| $\psi_{JB}$ | Junction-to-board characterization parameter | 99.2 | 121.4 | 99.3 | °C/W |

(1) For more information about traditional and new thermal metrics, see the *Semiconductor and IC Package Thermal Metrics* application report.

## 7.6 Thermal Information: MCP6294

| THERMAL METRIC(1) | | MCP6294 | | UNIT |
|---|---|---|---|---|
| | | D (SOIC) | PW (TSSOP) | |
| | | 14 PINS | 14 PINS | |
| $R_{\theta JA}$ | Junction-to-ambient thermal resistance | 106.9 | 135.8 | °C/W |
| $R_{\theta JC(top)}$ | Junction-to-case(top) thermal resistance | 64 | 64 | °C/W |
| $R_{\theta JB}$ | Junction-to-board thermal resistance | 63 | 79 | °C/W |
| $\psi_{JT}$ | Junction-to-top characterization parameter | 25.9 | 15.7 | °C/W |
| $\psi_{JB}$ | Junction-to-board characterization parameter | 62.7 | 78.4 | °C/W |

(1) For more information about traditional and new thermal metrics, see the *Semiconductor and IC Package Thermal Metrics* application report.

Copyright © 2017–2019, Texas Instruments Incorporated

## 7.7 Electrical Characteristics: $V_S$ (Total Supply Voltage) = (V+) – (V–) = 2.4 V to 5.5 V

at $T_A$ = 25°C, $R_L$ = 10 kΩ connected to $V_S$ / 2, $V_{CM}$ = $V_S$ / 2, and $V_{OUT}$ = $V_S$ / 2 (unless otherwise noted)

| PARAMETER | | TEST CONDITIONS | MIN | TYP | MAX | UNIT |
|---|---|---|---|---|---|---|
| **OFFSET VOLTAGE** | | | | | | |
| $V_{OS}$ | Input offset voltage | $V_S$ = 5 V | | ±0.3 | ±3 | mV |
| | | $V_S$ = 5 V, $T_A$ = –40°C to 125°C | | | ±5 | |
| $dV_{OS}/dT$ | Drift | $V_S$ = 5 V, $T_A$ = –40°C to 125°C | | ±1.1 | | µV/°C |
| PSRR | Power-supply rejection ratio | $V_S$ = 2.4 V – 5.5 V, $V_{CM}$ = (V–) | | ±7 | | µV/V |
| | Channel separation, DC | At DC | | 100 | | dB |
| **INPUT VOLTAGE RANGE** | | | | | | |
| $V_{CM}$ | Common-mode voltage range | $V_S$ = 2.4 V to 5.5 V | (V–) – 0.1 | | (V+) + 0.1 | V |
| CMRR | Common-mode rejection ratio | $V_S$ = 5.5 V<br>(V–) – 0.1 V < $V_{CM}$ < (V+) – 1.4 V<br>$T_A$ = –40°C to 125°C | 80 | 103 | | dB |
| | | $V_S$ = 5.5 V<br>$V_{CM}$ = –0.1 V to 5.6 V<br>$T_A$ = –40°C to 125°C | 57 | 87 | | |
| | | $V_S$ = 2.4 V<br>(V–) – 0.1 V < $V_{CM}$ < (V+) – 1.4 V<br>$T_A$ = –40°C to 125°C | | 88 | | |
| | | $V_S$ = 2.4 V<br>$V_{CM}$ = –0.1 V to 1.9 V<br>$T_A$ = –40°C to 125°C | | 81 | | |
| **INPUT BIAS CURRENT** | | | | | | |
| $I_B$ | Input bias current | | | ±1 | | pA |
| $I_{OS}$ | Input offset current | | | ±0.05 | | pA |
| **NOISE** | | | | | | |
| $E_n$ | Input voltage noise (peak-to-peak) | $V_S$ = 5 V, f = 0.1 Hz to 10 Hz | | 4.77 | | $\mu V_{PP}$ |
| $e_n$ | Input voltage noise density | $V_S$ = 5 V, f = 10 kHz, $R_L$ = 10 kΩ | | 8.7 | | $nV/\sqrt{Hz}$ |
| | | $V_S$ = 5 V, f = 1 kHz, $R_L$ = 10 kΩ | | 16 | | |
| $i_n$ | Input current noise density | f = 1 kHz | | 10 | | $fA/\sqrt{Hz}$ |
| **INPUT CAPACITANCE** | | | | | | |
| $C_{ID}$ | Differential | | | 2 | | pF |
| $C_{IC}$ | Common-mode | | | 4 | | pF |
| **OPEN-LOOP GAIN** | | | | | | |
| $A_{OL}$ | Open-loop voltage gain | $V_S$ = 2.4 V<br>(V–) + 0.04 V < $V_O$ < (V+) – 0.04 V<br>$R_L$ = 10 kΩ | | 100 | | dB |
| | | $V_S$ = 5.5 V<br>(V–) + 0.05 V < $V_O$ < (V+) – 0.05 V<br>$R_L$ = 10 kΩ | 104 | 130 | | |
| | | $V_S$ = 2.4 V<br>(V–) + 0.06 V < $V_O$ < (V+) – 0.06 V<br>$R_L$ = 2 kΩ | | 100 | | |
| | | $V_S$ = 5.5 V<br>(V–) + 0.15 V < $V_O$ < (V+) – 0.15 V<br>$R_L$ = 2 kΩ | | 130 | | |
| **FREQUENCY RESPONSE** | | | | | | |
| GBP | Gain bandwidth product | $V_S$ = 5 V, G = 1 | | 10 | | MHz |
| $\varphi_m$ | Phase margin | $V_S$ = 5 V, G = 1 | | 55 | | ° |
| SR | Slew rate | $V_S$ = 5 V, G = 1 | | 6.5 | | V/µs |
| $t_S$ | Settling time | To 0.1%, $V_S$ = 5 V, 2-V step , G = 1<br>$C_L$ = 100 pF | | 0.5 | | µs |
| | | To 0.01%, $V_S$ = 5 V, 2-V step , G = 1<br>$C_L$ = 100 pF | | 1 | | |
| $t_{OR}$ | Overload recovery time | $V_S$ = 5 V<br>$V_{IN}$ × gain > $V_S$ | | 0.2 | | µs |


Copyright © 2017–2019, Texas Instruments Incorporated

## Electrical Characteristics: $V_S$ (Total Supply Voltage) = (V+) – (V–) = 2.4 V to 5.5 V (continued)

at $T_A$ = 25°C, $R_L$ = 10 kΩ connected to $V_S$ / 2, $V_{CM}$ = $V_S$ / 2, and $V_{OUT}$ = $V_S$ / 2 (unless otherwise noted)

| PARAMETER | | TEST CONDITIONS | MIN | TYP | MAX | UNIT |
|---|---|---|---|---|---|---|
| THD + N | Total harmonic distortion + noise(1) | $V_S$ = 5 V<br>$V_O$ = 1 $V_{RMS}$<br>G = 1, f = 1 kHz | | 0.0008% | | |
| **OUTPUT** | | | | | | |
| $V_O$ | Voltage output swing from supply rails | $V_S$ = 5.5 V, $R_L$ = 10 kΩ | | | 15 | mV |
| | | $V_S$ = 5.5 V, $R_L$ = 2 kΩ | | | 50 | |
| $I_{SC}$ | Short-circuit current | $V_S$ = 5 V | | ±50 | | mA |
| $Z_O$ | Open-loop output impedance | $V_S$ = 5 V, f = 10 MHz | | 100 | | Ω |
| **POWER SUPPLY** | | | | | | |
| $I_Q$ | Quiescent current per amplifier | $V_S$ = 5.5 V, $I_O$ = 0 mA | | 600 | 1300 | µA |

(1) Third-order filter; bandwidth = 80 kHz at –3 dB.

版权 © 2017–2019, Texas Instruments Incorporated

## 7.8 Typical Characteristics

at $T_A$ = 25°C, $V_S$ = 5.5 V, $R_L$ = 10 kΩ connected to $V_S$ / 2, $V_{CM}$ = $V_S$ / 2, and $V_{OUT}$ = $V_S$ / 2 (unless otherwise noted)

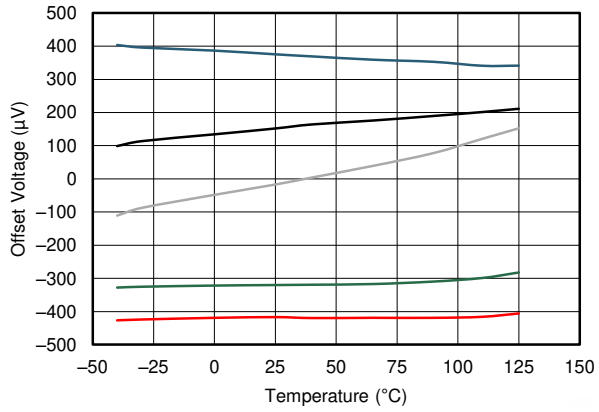


图 1. Offset Voltage vs Temperature

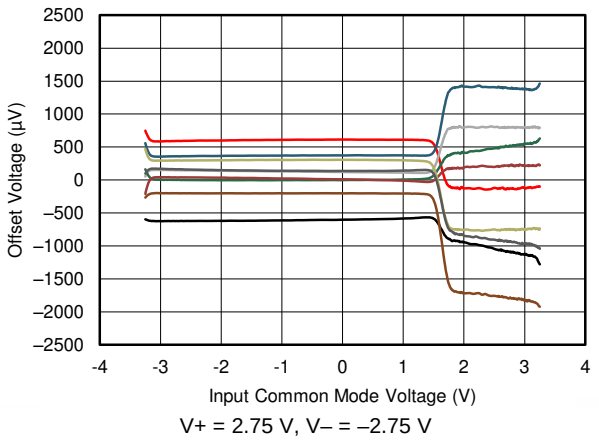


图 2. Offset Voltage vs Common-Mode Voltage

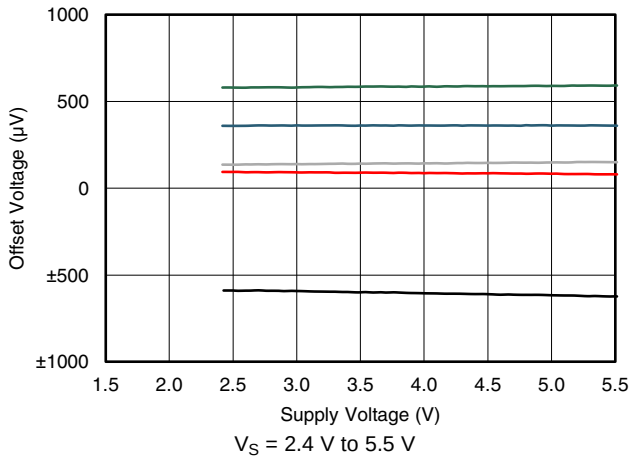


图 3. Offset Voltage vs Power Supply

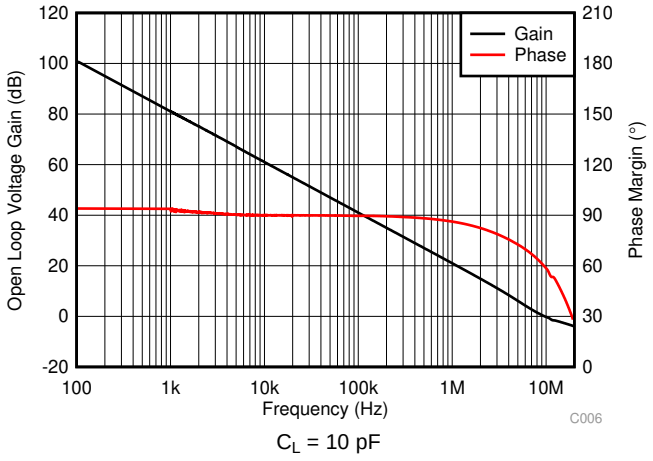


图 4. Open-Loop Gain and Phase vs Frequency

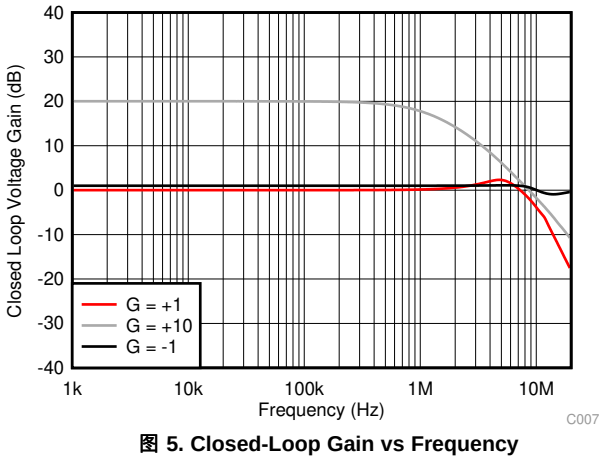


图 5. Closed-Loop Gain vs Frequency

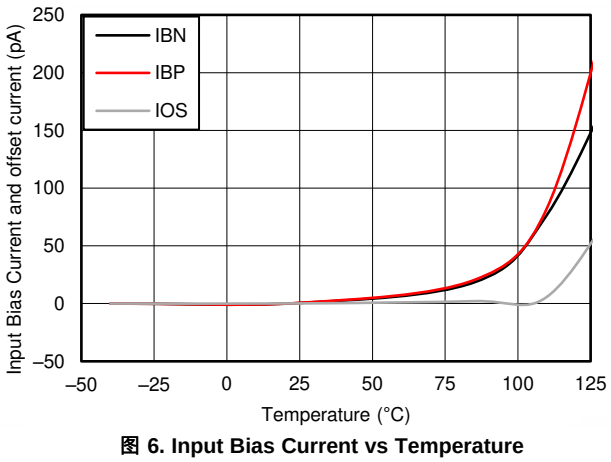


图 6. Input Bias Current vs Temperature


版权 © 2017–2019, Texas Instruments Incorporated

## Typical Characteristics (接下页)

at $T_A$ = 25°C, $V_S$ = 5.5 V, $R_L$ = 10 kΩ connected to $V_S$ / 2, $V_{CM}$ = $V_S$ / 2, and $V_{OUT}$ = $V_S$ / 2 (unless otherwise noted)

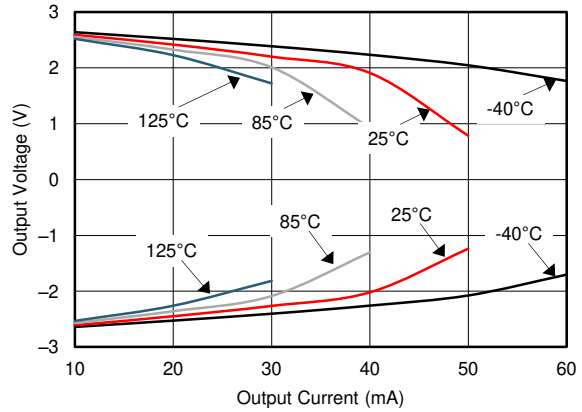


**图 7. Output Voltage Swing vs Output Current**

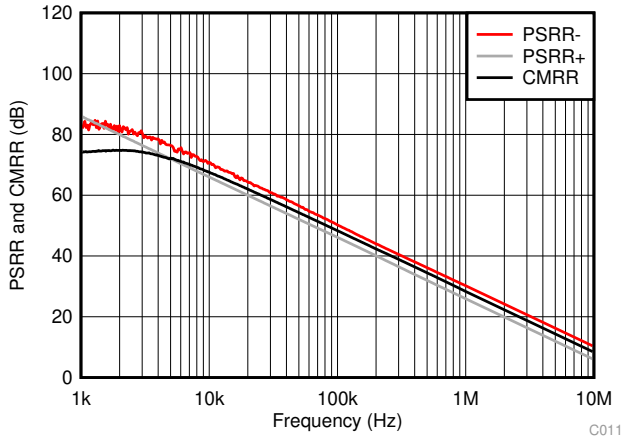


**图 8. CMRR and PSRR vs Frequency (Referred to Input)**

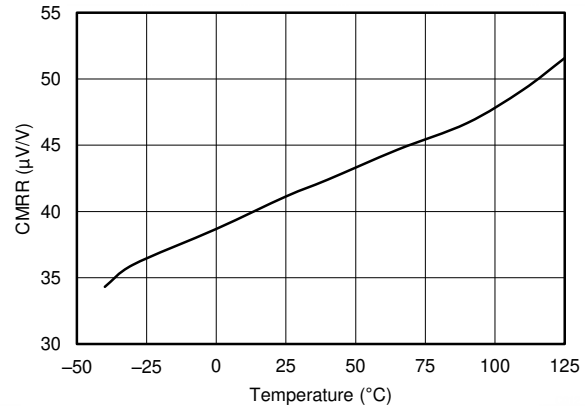


**图 9. CMRR vs Temperature**

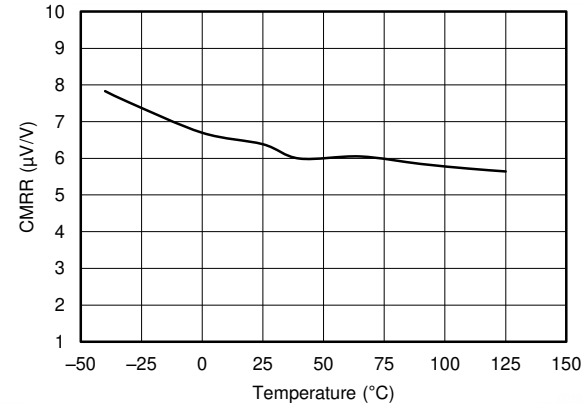


**图 10. CMRR vs Temperature**

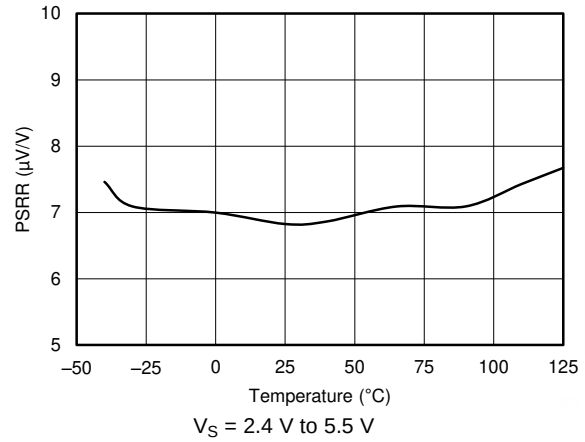


**图 11. PSRR vs Temperature**

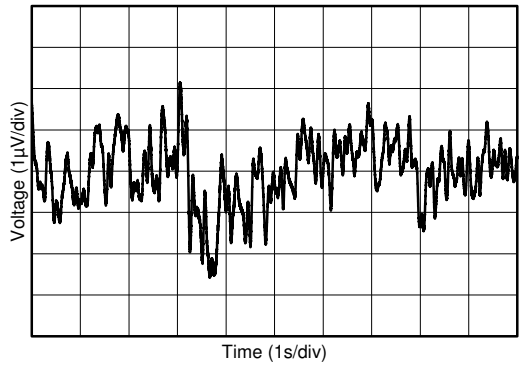


**图 12. 0.1-Hz to 10-Hz Input Voltage Noise**

## Typical Characteristics (接下页)

at $T_A$ = 25°C, $V_S$ = 5.5 V, $R_L$ = 10 kΩ connected to $V_S$ / 2, $V_{CM}$ = $V_S$ / 2, and $V_{OUT}$ = $V_S$ / 2 (unless otherwise noted)

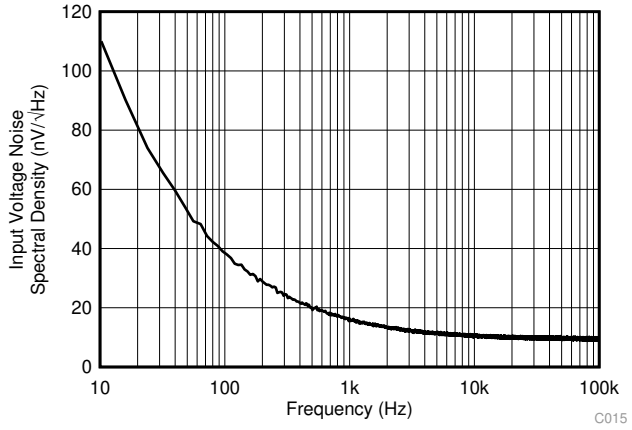


图 13. Input Voltage Noise Spectral Density vs Frequency

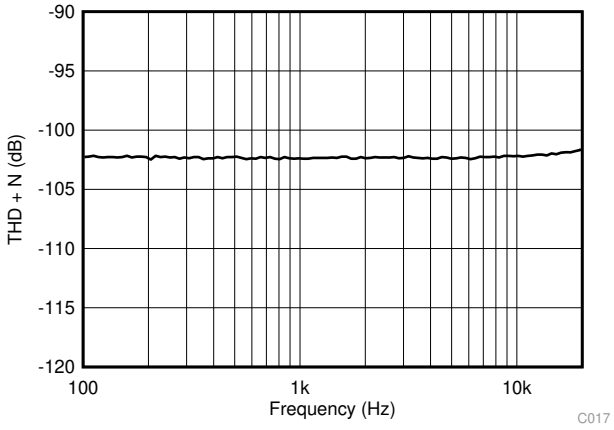


$V_S$ = 5.5 V　$V_{CM}$ = 2.5 V　$R_L$ = 2 kΩ
$V_{OUT}$ = 0.5 $V_{RMS}$　G = 1　BW = 80 kHz

图 14. THD + N vs Frequency

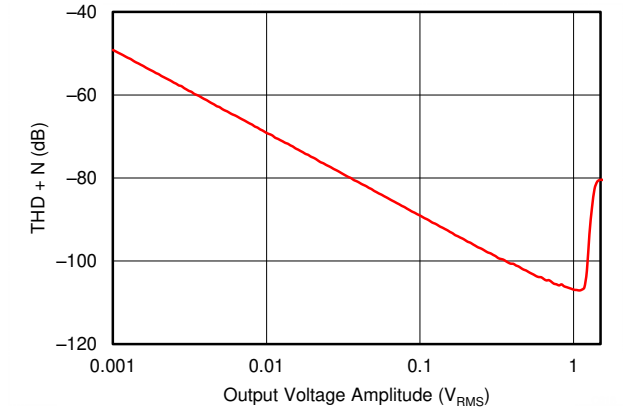


$V_S$ = 5.5 V　$V_{CM}$ = 2.5 V　$R_L$ = 2 kΩ
G = 1　BW = 80 kHz　f = 1 kHz

图 15. THD + N vs Amplitude

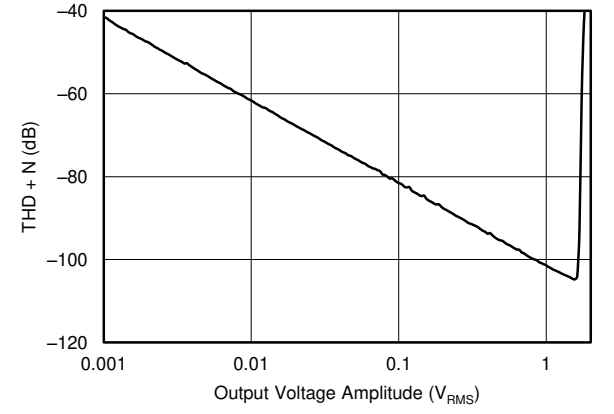


$V_S$ = 5.5 V　$V_{CM}$ = 2.5 V　$R_L$ = 2 kΩ
G = –1　BW = 80 kHz　f = 1 kHz

图 16. THD + N vs Amplitude

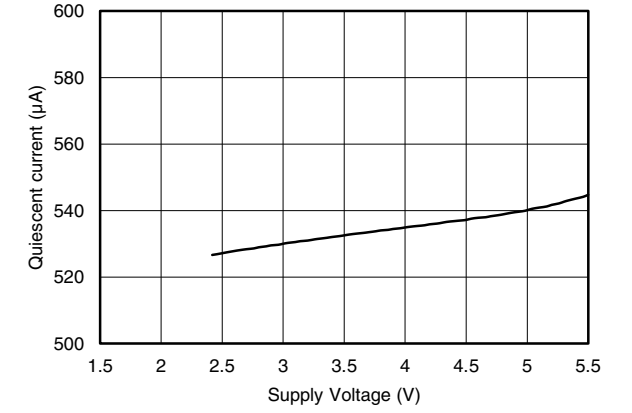


图 17. Quiescent Current vs Supply Voltage

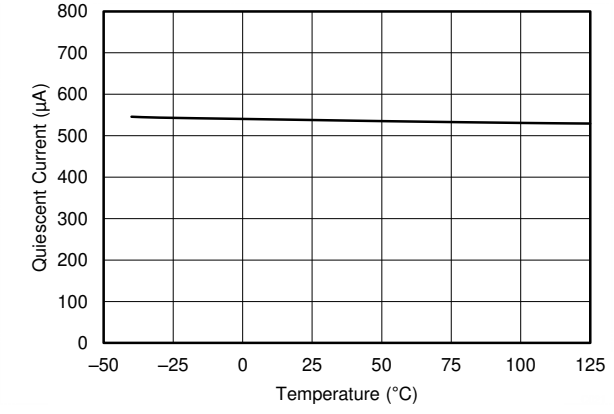


图 18. Quiescent Current vs Temperature


版权 © 2017–2019, Texas Instruments Incorporated

## Typical Characteristics (接下页)

at $T_A$ = 25°C, $V_S$ = 5.5 V, $R_L$ = 10 kΩ connected to $V_S$ / 2, $V_{CM}$ = $V_S$ / 2, and $V_{OUT}$ = $V_S$ / 2 (unless otherwise noted)

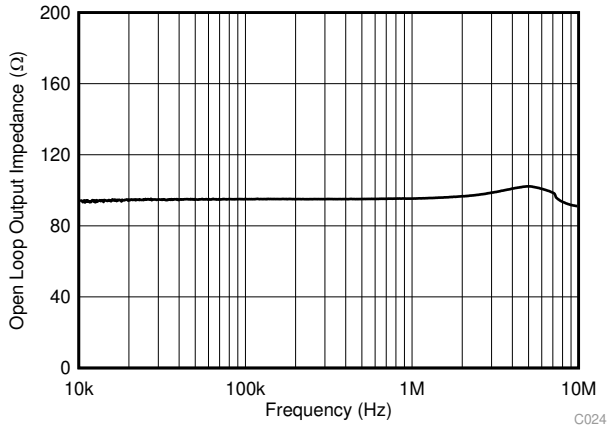


**图 19. Open-Loop Output Impedance vs Frequency**

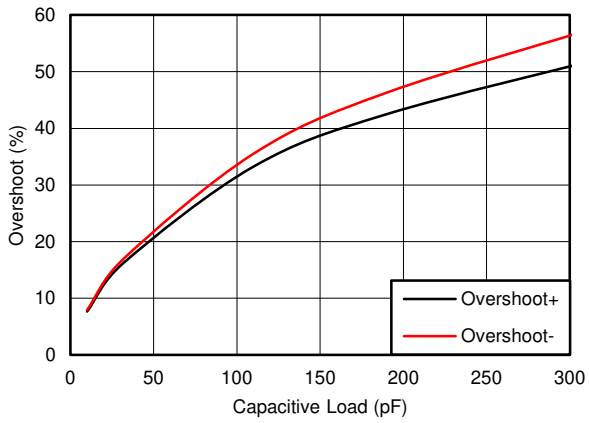


V+ = 2.75 V V– = –2.75 V G = 1 V/V
$R_L$ = 10 kΩ $V_{OUT}$ step = 100 $mV_{p-p}$

**图 20. Small-Signal Overshoot vs Load Capacitance**

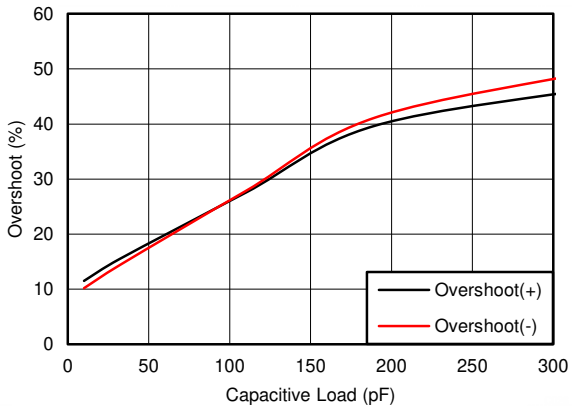


V+ = 2.75 V V– = –2.75 V G = –1 V/V
$R_L$ = 10 kΩ $V_{OUT}$ step = 100 $mV_{p-p}$

**图 21. Small-Signal Overshoot vs Load Capacitance**

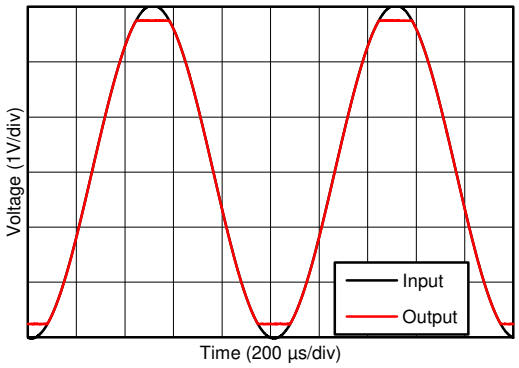


V+ = 2.75 V, V– = –2.75 V

**图 22. No Phase Reversal**

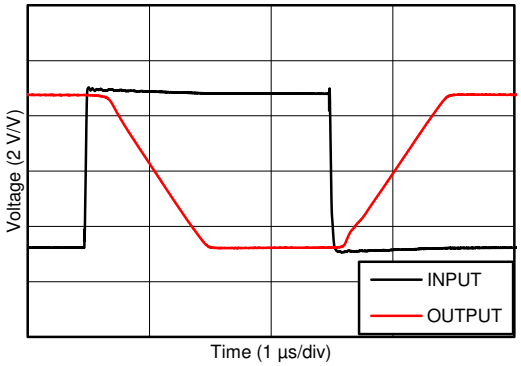


V+ = 2.75 V V– = –2.75 V G = –10 V/V

**图 23. Overload Recovery**

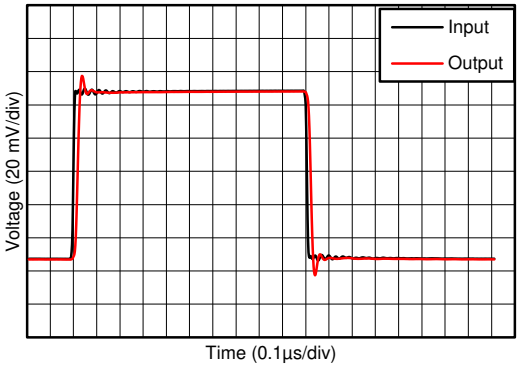


V+ = 2.75 V V– = –2.75 V G = 1 V/V

**图 24. Small-Signal Step Response**

## Typical Characteristics (接下页)

at $T_A$ = 25°C, $V_S$ = 5.5 V, $R_L$ = 10 kΩ connected to $V_S$ / 2, $V_{CM}$ = $V_S$ / 2, and $V_{OUT}$ = $V_S$ / 2 (unless otherwise noted)

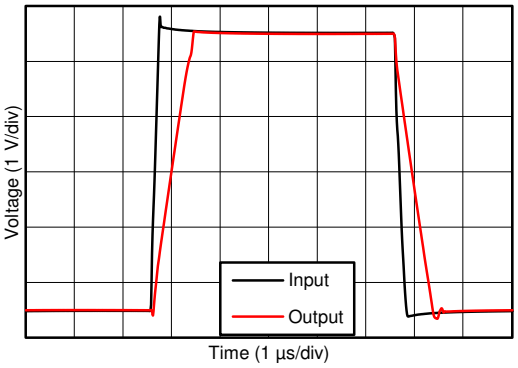


V+ = 2.75 V　　V– = –2.75 V　　$C_L$ = 100 pF
G = 1 V/V

**图 25. Large-Signal Step Response**

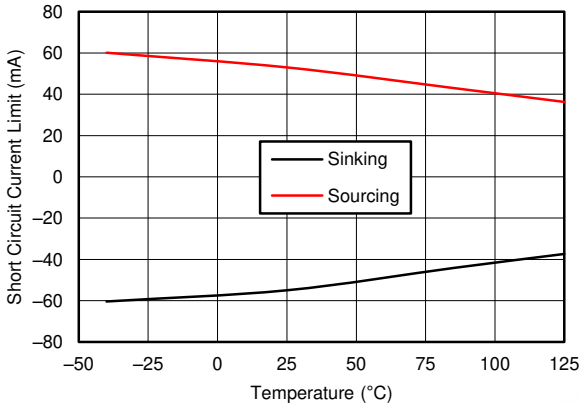


**图 26. Short-Circuit Current vs Temperature**

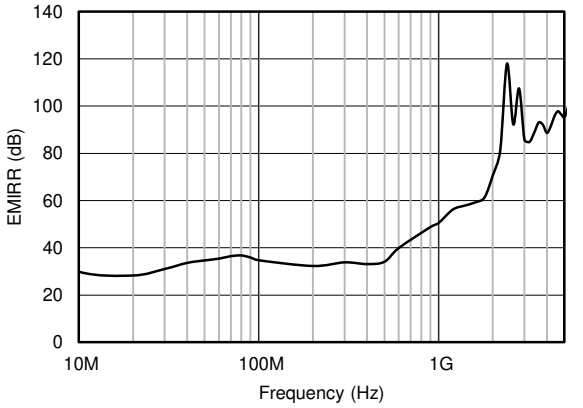


$P_{RF}$ = –10 dBm

**图 27. Electromagnetic Interference Rejection Ratio Referred to Noninverting Input (EMIRR+) vs Frequency**

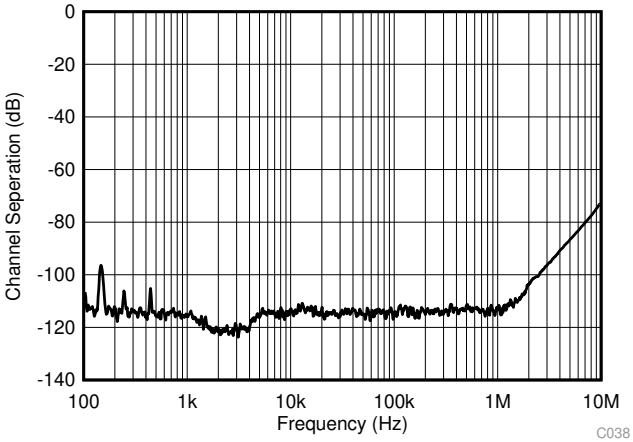


V+ = 2.75 V, V– = –2.75 V

**图 28. Channel Separation vs Frequency**

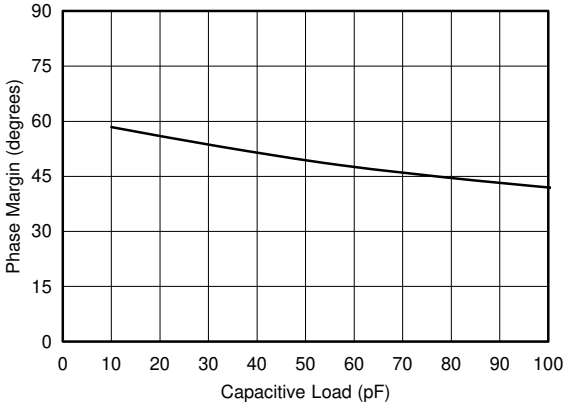


$V_S$ = 5.5 V

**图 29. Phase Margin vs Capacitive Load**

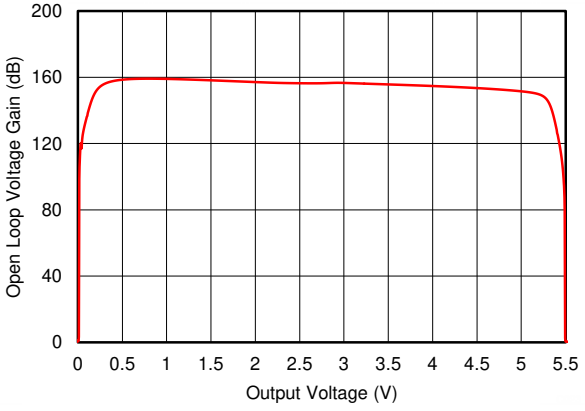


$V_S$ = 5.5 V

**图 30. Open Loop Voltage Gain vs Output Voltage**


版权 © 2017–2019, Texas Instruments Incorporated

## Typical Characteristics (接下页)

at $T_A$ = 25°C, $V_S$ = 5.5 V, $R_L$ = 10 kΩ connected to $V_S$ / 2, $V_{CM}$ = $V_S$ / 2, and $V_{OUT}$ = $V_S$ / 2 (unless otherwise noted)

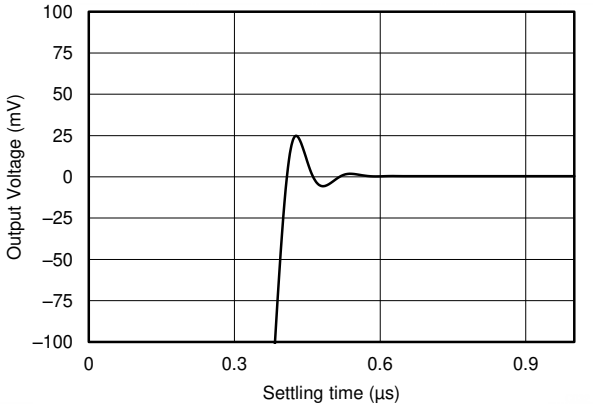


**图 31. Large Signal Settling Time (Positive)**

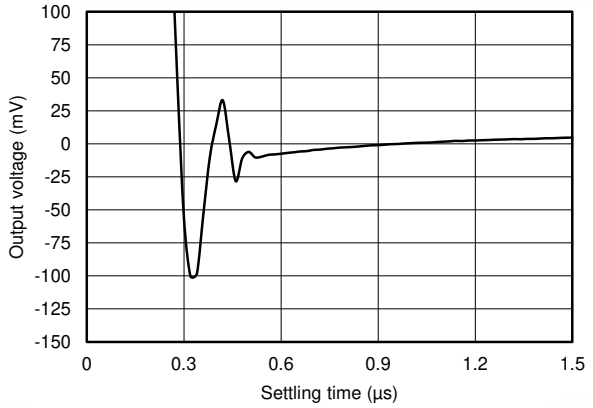


**图 32. Large Signal Settling Time (Negative)**

# 8 Detailed Description

## 8.1 Overview

The MCP629x series is a family of low-power, rail-to-rail input and output op amps. These devices operate from 2.4 V to 5.5 V, are unity-gain stable, and are designed for a wide range of general-purpose applications. The input common-mode voltage range includes both rails and allows the MCP629x series to be used in any single-supply application. Rail-to-rail input and output swing significantly increases dynamic range in low-supply applications and are designed for driving sampling analog-to-digital converters (ADCs).

## 8.2 Functional Block Diagram

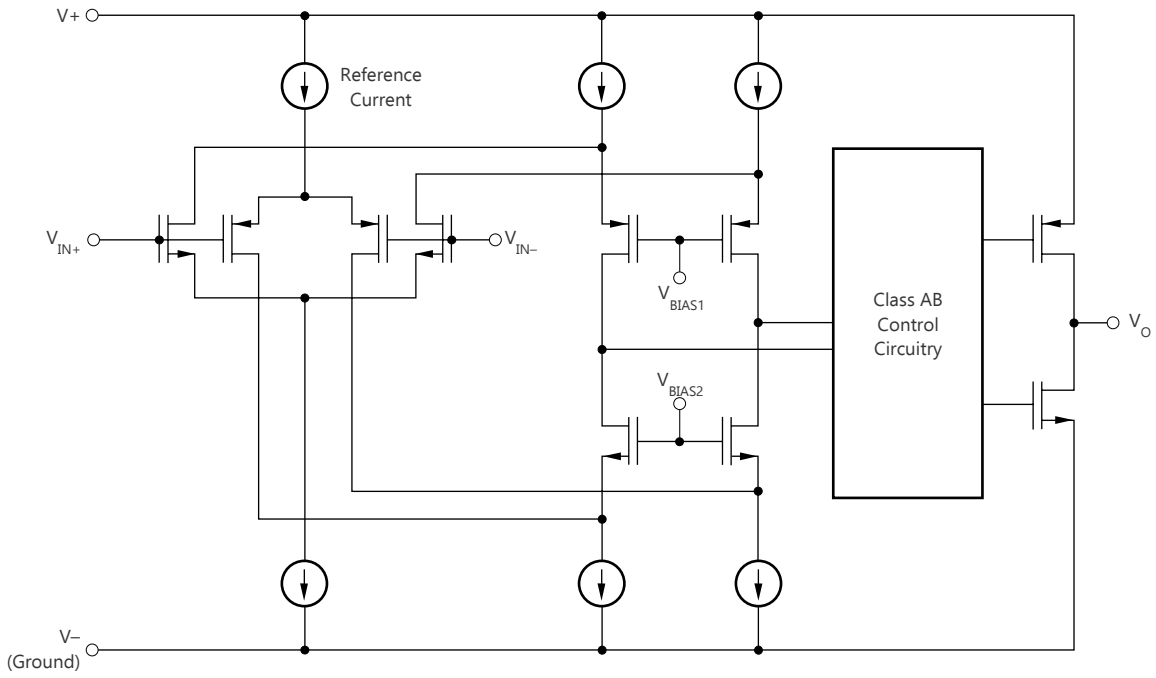



版权 © 2017–2019, Texas Instruments Incorporated

## 8.3 Feature Description

### 8.3.1 Rail-to-Rail Input

The input common-mode voltage range of the MCP629x family extends 100 mV beyond the supply rails for the full supply voltage range of 2.4 V to 5.5 V. This performance is achieved with a complementary input stage: an N-channel input differential pair in parallel with a P-channel differential pair, as the *Functional Block Diagram* shows. The N-channel pair is active for input voltages close to the positive rail, typically (V+) – 1.4 V to 100 mV above the positive supply, whereas the P-channel pair is active for inputs from 100 mV below the negative supply to approximately (V+) – 1.4 V. There is a small transition region, typically (V+) – 1.2 V to (V+) – 1 V, in which both pairs are on. This 200-mV transition region can vary up to 200 mV with process variation. Thus, the transition region (with both stages on) can range from (V+) – 1.4 V to (V+) – 1.2 V on the low end, and up to (V+) – 1 V to (V+) – 0.8 V on the high end. Within this transition region, PSRR, CMRR, offset voltage, offset drift, and THD can degrade compared to device operation outside this region.

### 8.3.2 Rail-to-Rail Output

Designed as a low-power, low-voltage operational amplifier, the MCP629x series delivers a robust output drive capability. A class AB output stage with common-source transistors achieves full rail-to-rail output swing capability. For resistive loads of 10 kΩ, the output swings to within 15 mV of either supply rail, regardless of the applied power-supply voltage. Different load conditions change the ability of the amplifier to swing close to the rails.

### 8.3.3 Overload Recovery

Overload recovery is defined as the time required for the operational amplifier output to recover from a saturated state to a linear state. The output devices of the operational amplifier enter a saturation region when the output voltage exceeds the rated operating voltage, because of the high input voltage or the high gain. After the device enters the saturation region, the charge carriers in the output devices require time to return to the linear state. After the charge carriers return to the linear state, the device begins to slew at the specified slew rate. Therefore, the propagation delay (in case of an overload condition) is the sum of the overload recovery time and the slew time. The overload recovery time for the MCP629x series is approximately 200 ns.

## 8.4 Device Functional Modes

The MCP629x family has a single functional mode. These devices are powered on as long as the power-supply voltage is between 2.4 V (±1.2 V) and 5.5 V (±2.75 V).

版权 © 2017–2019, Texas Instruments Incorporated

# 9 Application and Implementation

**注**

Information in the following applications sections is not part of the TI component specification, and TI does not warrant its accuracy or completeness. TI's customers are responsible for determining suitability of components for their purposes. Customers should validate and test their design implementation to confirm system functionality.

## 9.1 Application Information

The MCP629x series features 10-MHz bandwidth and 6.5-V/µs slew rate with only 600µA of supply current per channel, providing good AC performance at low power consumption. DC applications are well served with a low input noise voltage of 8.7 nV / $\sqrt{Hz}$ at 10 kHz, low input bias current, and a typical input offset voltage of 0.3 mV.

## 9.2 Typical Application

图 33 shows the MCP629x configured in a low-side, motor-control application.

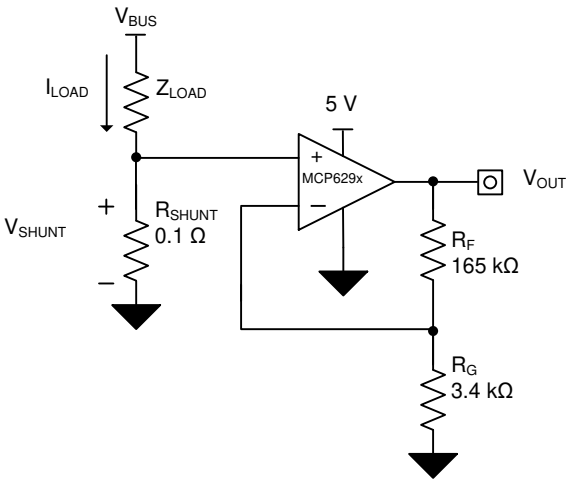


**图 33. MCP629x in a Low-Side, Motor-Control Application**

### 9.2.1 Design Requirements

The design requirements for this design are:

- Load current: 0 A to 1 A
- Output voltage: 4.95 V
- Maximum shunt voltage: 100 mV


版权 © 2017–2019, Texas Instruments Incorporated

## Typical Application (接下页)

### 9.2.2 Detailed Design Procedure

The transfer function of the circuit in 图 33 is shown in 公式 1.

$$V_{OUT} = I_{LOAD} \times R_{SHUNT} \times Gain \quad (1)$$

The load current ($I_{LOAD}$) produces a voltage drop across the shunt resistor ($R_{SHUNT}$). The load current is set from 0 A to 1 A. To keep the shunt voltage below 100 mV at maximum load current, the largest shunt resistor is defined using 公式 2.

$$R_{SHUNT} = \frac{V_{SHUNT_MAX}}{I_{LOAD_MAX}} = \frac{100mV}{1A} = 100m\Omega \quad (2)$$

Using 公式 2, $R_{SHUNT}$ is 100 mΩ. The voltage drop produced by $I_{LOAD}$ and $R_{SHUNT}$ is amplified by the MCP629x to produce an output voltage of roughly 0 V to 4.95 V. The gain needed by the MCP629x to produce the necessary output voltage is calculated using 公式 3:

$$Gain = \frac{\left(V_{OUT_MAX} - V_{OUT_MIN}\right)}{\left(V_{IN_MAX} - V_{IN_MIN}\right)} \quad (3)$$

Using 公式 3, the required gain is calculated to be 49.5 V/V, which is set with resistors $R_F$ and $R_G$. 公式 4 is used to size the resistors, $R_F$ and $R_G$, to set the gain of the MCP629x to 49.5 V/V.

$$Gain = 1 + \frac{\left(R_F\right)}{\left(R_G\right)} \quad (4)$$

Choosing $R_F$ as 165 kΩ and $R_G$ as 3.4 kΩ provides a combination that equals roughly 49.5 V/V. 图 34 shows the measured transfer function of the circuit shown in 图 33.

### 9.2.3 Application Curve

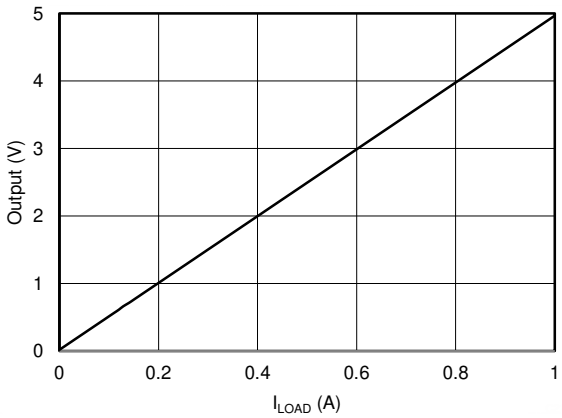


**图 34. Low-Side, Current-Sense Transfer Function**

# 10 Power Supply Recommendations

The MCP629x series is specified for operation from 2.4 V to 5.5 V (±1.2 V to ±2.75 V); many specifications apply from –40°C to 125°C. The *Typical Characteristics* section presents parameters that can exhibit significant variance with regard to operating voltage or temperature.

**CAUTION**

Supply voltages larger than 6 V can permanently damage the device; see the *Absolute Maximum Ratings* table.

Place 0.1-µF bypass capacitors close to the power-supply pins to reduce errors coupling in from noisy or high-impedance power supplies. For more detailed information on bypass capacitor placement, see the *Layout Example* section.

## 10.1 Input and ESD Protection

The MCP629x series incorporates internal ESD protection circuits on all pins. For input and output pins, this protection primarily consists of current-steering diodes connected between the input and power-supply pins. These ESD protection diodes provide in-circuit, input overdrive protection, as long as the current is limited to 10-mA, as stated in the *Absolute Maximum Ratings* table. 图 35 shows how a series input resistor is added to the driven input to limit the input current. The added resistor contributes thermal noise at the amplifier input and the value must be kept to a minimum in noise-sensitive applications.

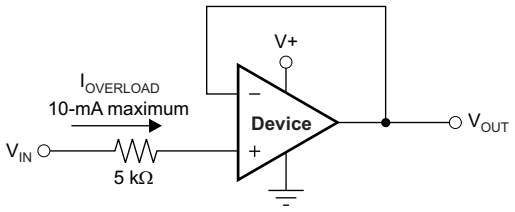


**图 35. Input Current Protection**


版权 © 2017–2019, Texas Instruments Incorporated

# 11 Layout

## 11.1 Layout Guidelines

For best operational performance of the device, use good printed-circuit board (PCB) layout practices, including:

- Noise can propagate into analog circuitry through the power pins of the circuit as a whole and of op amp itself. Bypass capacitors reduce the coupled noise by providing low-impedance power sources local to the analog circuitry.
  - Connect low-ESR, 0.1-µF ceramic bypass capacitors between each supply pin and ground, placed as close to the device as possible. A single bypass capacitor from V+ to ground is applicable for single-supply applications.
- Separate grounding for analog and digital portions of circuitry is one of the simplest and most-effective methods of noise suppression. One or more layers on multilayer PCBs are usually devoted to ground planes. A ground plane helps distribute heat and reduces electromagnetic interference (EMI) noise pickup. Make sure to physically separate digital and analog grounds, paying attention to the flow of the ground current. For more detailed information, see *Circuit Board Layout Techniques*.
- To reduce parasitic coupling, run the input traces as far away from the supply or output traces as possible. If these traces cannot be kept separate, crossing the sensitive trace perpendicular is much better as opposed to in parallel with the noisy trace.
- Place the external components as close to the device as possible. As shown in 图 37, keeping RF and RG close to the inverting input minimizes parasitic capacitance on the inverting input.
- Keep the length of input traces as short as possible. Always remember that the input traces are the most sensitive part of the circuit.
- Consider a driven, low-impedance guard ring around the critical traces. A guard ring can significantly reduce leakage currents from nearby traces that are at different potentials.
- Cleaning the PCB following board assembly is recommended for best performance.
- Any precision integrated circuit can experience performance shifts resulting from moisture ingress into the plastic package. Following any aqueous PCB cleaning process, baking the PCB assembly is recommended to remove moisture introduced into the device packaging during the cleaning process. A low-temperature, post-cleaning bake at 85°C for 30 minutes is sufficient for most circumstances.

## 11.2 Layout Example

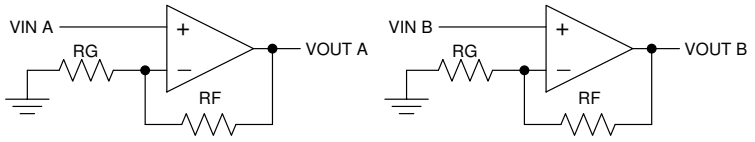


**图 36. Schematic Representation for 图 37**

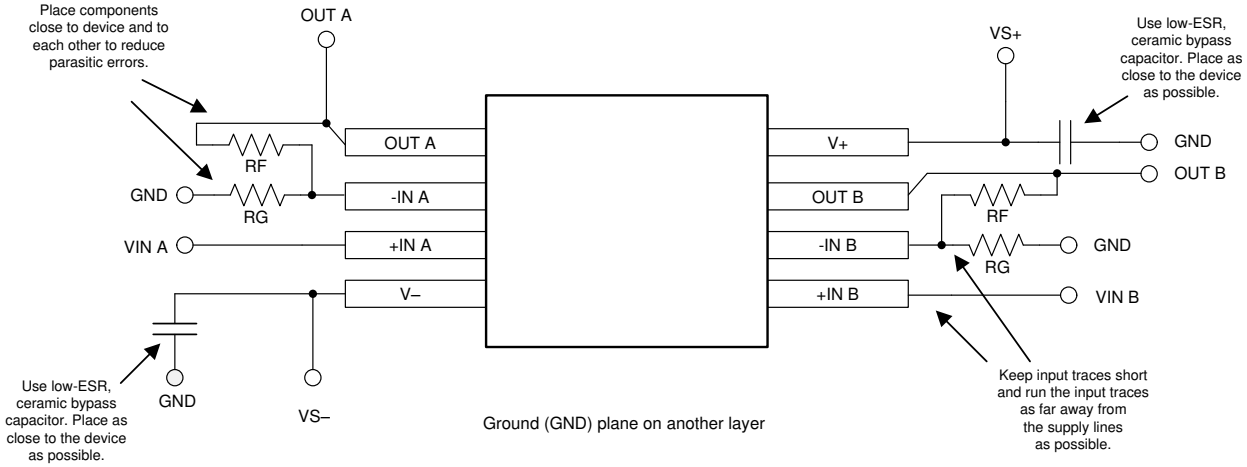


**图 37. Layout Example**

# 12 器件和文档支持

## 12.1 文档支持

### 12.1.1 相关文档

请参阅如下相关文档：

*《电路板布局技巧》*(SLOA089)

## 12.2 相关链接

下表列出了快速访问链接。类别包括技术文档、支持和社区资源、工具和软件，以及立即订购快速访问。

**表 1.** 相关链接

| 器件 | 产品文件夹 | 立即订购 | 技术文档 | 工具与软件 | 支持和社区 |
|---|---|---|---|---|---|
| MCP6291 | 请单击此处 | 请单击此处 | 请单击此处 | 请单击此处 | 请单击此处 |
| MCP6292 | 请单击此处 | 请单击此处 | 请单击此处 | 请单击此处 | 请单击此处 |
| MCP6294 | 请单击此处 | 请单击此处 | 请单击此处 | 请单击此处 | 请单击此处 |

## 12.3 接收文档更新通知

要接收文档更新通知，请导航至 ti.com. 上的器件产品文件夹。单击右上角的*通知我*进行注册，即可每周接收产品信息更改摘要。有关更改的详细信息，请查看任何已修订文档中包含的修订历史记录。

## 12.4 社区资源

TI E2E™ support forums are an engineer's go-to source for fast, verified answers and design help — straight from the experts. Search existing answers or ask your own question to get the quick design help you need.

Linked content is provided "AS IS" by the respective contributors. They do not constitute TI specifications and do not necessarily reflect TI's views; see TI's Terms of Use.

## 12.5 商标

E2E is a trademark of Texas Instruments.
All other trademarks are the property of their respective owners.

## 12.6 静电放电警告



ESD 可能会损坏该集成电路。德州仪器 (TI) 建议通过适当的预防措施处理所有集成电路。如果不遵守正确的处理措施和安装程序，可能会损坏集成电路。

ESD 的损坏小至导致微小的性能降级，大至整个器件故障。 精密的集成电路可能更容易受到损坏，这是因为非常细微的参数更改都可能会导致器件与其发布的规格不相符。

## 12.7 Glossary

SLYZ022 — *TI Glossary*.

This glossary lists and explains terms, acronyms, and definitions.

# 13 机械、封装和可订购信息

以下页面包含机械、封装和可订购信息。这些信息是指定器件的最新可用数据。数据如有变更，恕不另行通知，且不会对此文档进行修订。如需获取此数据表的浏览器版本，请查阅左侧的导航栏。


版权 © 2017–2019, Texas Instruments Incorporated

## PACKAGING INFORMATION

| Orderable part number | Status (1) | Material type (2) | Package \| Pins | Package qty \| Carrier | RoHS (3) | Lead finish/ Ball material (4) | MSL rating/ Peak reflow (5) | Op temp (°C) | Part marking (6) |
|---|---|---|---|---|---|---|---|---|---|
| MCP6291IDBVR | Active | Production | SOT-23 (DBV) \| 5 | 3000 \| LARGE T&R | Yes | NIPDAU \| SN | Level-1-260C-UNLIM | -40 to 125 | 1U3F |
| MCP6291IDBVR.A | Active | Production | SOT-23 (DBV) \| 5 | 3000 \| LARGE T&R | Yes | NIPDAU | Level-1-260C-UNLIM | -40 to 125 | 1U3F |
| MCP6291IDBVRG4 | Active | Production | SOT-23 (DBV) \| 5 | 3000 \| LARGE T&R | Yes | NIPDAU | Level-1-260C-UNLIM | -40 to 125 | 1U3F |
| MCP6291IDBVRG4.A | Active | Production | SOT-23 (DBV) \| 5 | 3000 \| LARGE T&R | Yes | NIPDAU | Level-1-260C-UNLIM | -40 to 125 | 1U3F |
| MCP6291IDCKR | Active | Production | SC70 (DCK) \| 5 | 3000 \| LARGE T&R | Yes | POST-PLAT AG SPOT \| SN | Level-2-260C-1 YEAR | -40 to 125 | 1EL |
| MCP6291IDCKR.A | Active | Production | SC70 (DCK) \| 5 | 3000 \| LARGE T&R | Yes | SN | Level-2-260C-1 YEAR | -40 to 125 | 1EL |
| MCP6292IDDFR | Active | Production | SOT-23-THIN (DDF) \| 8 | 3000 \| LARGE T&R | Yes | NIPDAU | Level-1-260C-UNLIM | -40 to 125 | M292 |
| MCP6292IDDFR.A | Active | Production | SOT-23-THIN (DDF) \| 8 | 3000 \| LARGE T&R | Yes | NIPDAU | Level-1-260C-UNLIM | -40 to 125 | M292 |
| MCP6292IDGKR | Active | Production | VSSOP (DGK) \| 8 | 2500 \| LARGE T&R | Yes | NIPDAU \| NIPDAUAG \| SN | Level-2-260C-1 YEAR | -40 to 125 | M292 |
| MCP6292IDGKR.A | Active | Production | VSSOP (DGK) \| 8 | 2500 \| LARGE T&R | Yes | NIPDAU | Level-2-260C-1 YEAR | -40 to 125 | M292 |
| MCP6292IDGKT | Active | Production | VSSOP (DGK) \| 8 | 250 \| SMALL T&R | Yes | NIPDAU \| NIPDAUAG \| SN | Level-2-260C-1 YEAR | -40 to 125 | M292 |
| MCP6292IDGKT.A | Active | Production | VSSOP (DGK) \| 8 | 250 \| SMALL T&R | Yes | NIPDAU | Level-2-260C-1 YEAR | -40 to 125 | M292 |
| MCP6292IDR | Active | Production | SOIC (D) \| 8 | 2500 \| LARGE T&R | Yes | NIPDAU | Level-1-260C-UNLIM | -40 to 125 | MC6292 |
| MCP6292IDR.A | Active | Production | SOIC (D) \| 8 | 2500 \| LARGE T&R | Yes | NIPDAU | Level-1-260C-UNLIM | -40 to 125 | MC6292 |
| MCP6294IDR | Active | Production | SOIC (D) \| 14 | 2500 \| LARGE T&R | Yes | NIPDAU | Level-2-260C-1 YEAR | -40 to 125 | MCP6294D |
| MCP6294IDR.A | Active | Production | SOIC (D) \| 14 | 2500 \| LARGE T&R | Yes | NIPDAU | Level-2-260C-1 YEAR | -40 to 125 | MCP6294D |
| MCP6294IPWR | Active | Production | TSSOP (PW) \| 14 | 2000 \| LARGE T&R | Yes | NIPDAU \| SN | Level-2-260C-1 YEAR | -40 to 125 | MCP6294 |
| MCP6294IPWR.A | Active | Production | TSSOP (PW) \| 14 | 2000 \| LARGE T&R | Yes | SN | Level-2-260C-1 YEAR | -40 to 125 | MCP6294 |
| MCP6294IPWT | Active | Production | TSSOP (PW) \| 14 | 250 \| SMALL T&R | Yes | NIPDAU \| SN | Level-2-260C-1 YEAR | -40 to 125 | MCP6294 |
| MCP6294IPWT.A | Active | Production | TSSOP (PW) \| 14 | 250 \| SMALL T&R | Yes | SN | Level-2-260C-1 YEAR | -40 to 125 | MCP6294 |

(1) **Status:** For more details on status, see our product life cycle.

(2) **Material type:** When designated, preproduction parts are prototypes/experimental devices, and are not yet approved or released for full production. Testing and final process, including without limitation quality assurance, reliability performance testing, and/or process qualification, may not yet be complete, and this item is subject to further changes or possible discontinuation. If available for ordering, purchases will be subject to an additional waiver at checkout, and are intended for early internal evaluation purposes only. These items are sold without warranties of any kind.

(3) **RoHS values:** Yes, No, RoHS Exempt. See the TI RoHS Statement for additional information and value definition.

(4) **Lead finish/Ball material:** Parts may have multiple material finish options. Finish options are separated by a vertical ruled line. Lead finish/Ball material values may wrap to two lines if the finish value exceeds the maximum column width.

(5) **MSL rating/Peak reflow:** The moisture sensitivity level ratings and peak solder (reflow) temperatures. In the event that a part has multiple moisture sensitivity ratings, only the lowest level per JEDEC standards is shown. Refer to the shipping label for the actual reflow temperature that will be used to mount the part to the printed circuit board.

(6) **Part marking:** There may be an additional marking, which relates to the logo, the lot trace code information, or the environmental category of the part.

Multiple part markings will be inside parentheses. Only one part marking contained in parentheses and separated by a "~" will appear on a part. If a line is indented then it is a continuation of the previous line and the two combined represent the entire part marking for that device.

**Important Information and Disclaimer:**The information provided on this page represents TI's knowledge and belief as of the date that it is provided. TI bases its knowledge and belief on information provided by third parties, and makes no representation or warranty as to the accuracy of such information. Efforts are underway to better integrate information from third parties. TI has taken and continues to take reasonable steps to provide representative and accurate information but may not have conducted destructive testing or chemical analysis on incoming materials and chemicals. TI and TI suppliers consider certain information to be proprietary, and thus CAS numbers and other limited information may not be available for release.

In no event shall TI's liability arising out of such information exceed the total purchase price of the TI part(s) at issue in this document sold by TI to Customer on an annual basis.

## TAPE AND REEL INFORMATION

**REEL DIMENSIONS**

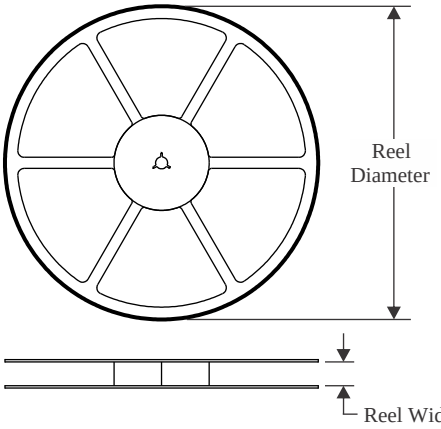


**TAPE DIMENSIONS**

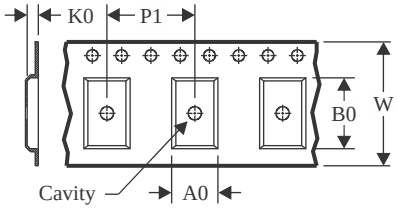


| | |
|---|---|
| A0 | Dimension designed to accommodate the component width |
| B0 | Dimension designed to accommodate the component length |
| K0 | Dimension designed to accommodate the component thickness |
| W | Overall width of the carrier tape |
| P1 | Pitch between successive cavity centers |

**QUADRANT ASSIGNMENTS FOR PIN 1 ORIENTATION IN TAPE**

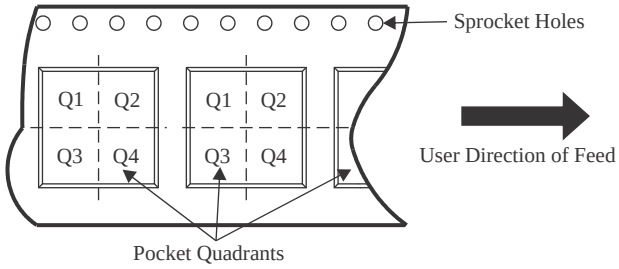


*All dimensions are nominal

| Device | Package Type | Package Drawing | Pins | SPQ | Reel Diameter (mm) | Reel Width W1 (mm) | A0 (mm) | B0 (mm) | K0 (mm) | P1 (mm) | W (mm) | Pin1 Quadrant |
|---|---|---|---|---|---|---|---|---|---|---|---|---|
| MCP6291IDBVR | SOT-23 | DBV | 5 | 3000 | 180.0 | 8.4 | 3.2 | 3.2 | 1.4 | 4.0 | 8.0 | Q3 |
| MCP6291IDBVR | SOT-23 | DBV | 5 | 3000 | 180.0 | 8.4 | 3.2 | 3.2 | 1.4 | 4.0 | 8.0 | Q3 |
| MCP6291IDBVRG4 | SOT-23 | DBV | 5 | 3000 | 180.0 | 8.4 | 3.2 | 3.2 | 1.4 | 4.0 | 8.0 | Q3 |
| MCP6291IDCKR | SC70 | DCK | 5 | 3000 | 178.0 | 8.4 | 2.25 | 2.45 | 1.2 | 4.0 | 8.0 | Q3 |
| MCP6292IDDFR | SOT-23-THIN | DDF | 8 | 3000 | 180.0 | 8.4 | 3.2 | 3.2 | 1.4 | 4.0 | 8.0 | Q3 |
| MCP6292IDGKR | VSSOP | DGK | 8 | 2500 | 330.0 | 12.4 | 5.3 | 3.4 | 1.4 | 8.0 | 12.0 | Q1 |
| MCP6292IDGKT | VSSOP | DGK | 8 | 250 | 330.0 | 12.4 | 5.3 | 3.4 | 1.4 | 8.0 | 12.0 | Q1 |
| MCP6292IDR | SOIC | D | 8 | 2500 | 330.0 | 12.4 | 6.4 | 5.2 | 2.1 | 8.0 | 12.0 | Q1 |
| MCP6294IDR | SOIC | D | 14 | 2500 | 330.0 | 16.4 | 6.5 | 9.0 | 2.1 | 8.0 | 16.0 | Q1 |
| MCP6294IPWR | TSSOP | PW | 14 | 2000 | 330.0 | 12.4 | 6.9 | 5.6 | 1.6 | 8.0 | 12.0 | Q1 |
| MCP6294IPWR | TSSOP | PW | 14 | 2000 | 330.0 | 12.4 | 6.9 | 5.6 | 1.6 | 8.0 | 12.0 | Q1 |
| MCP6294IPWT | TSSOP | PW | 14 | 250 | 330.0 | 12.4 | 6.9 | 5.6 | 1.6 | 8.0 | 12.0 | Q1 |

TAPE AND REEL BOX DIMENSIONS

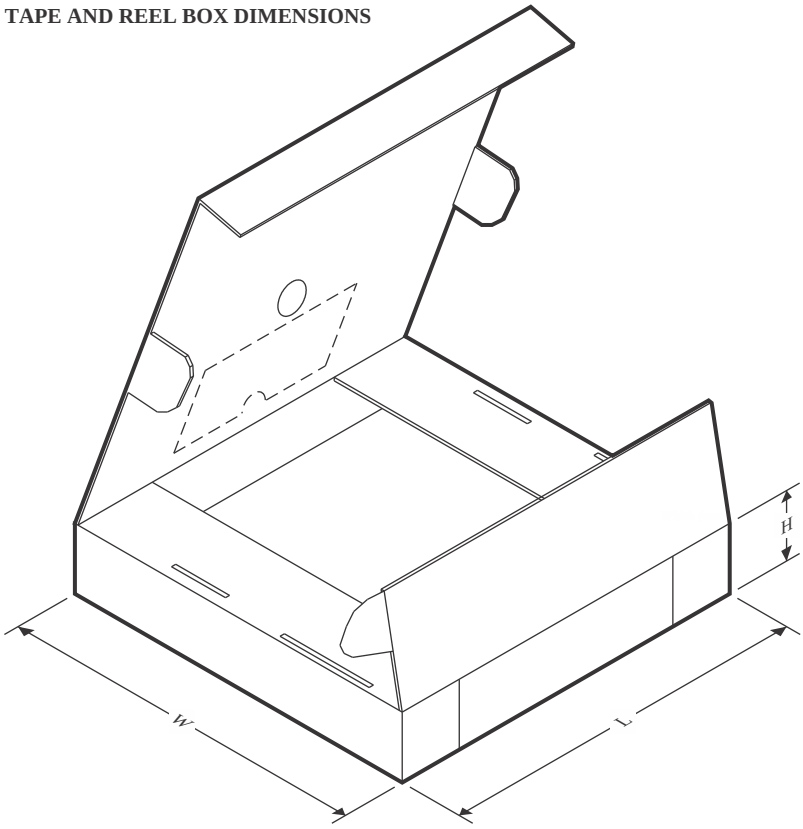


*All dimensions are nominal

| Device | Package Type | Package Drawing | Pins | SPQ | Length (mm) | Width (mm) | Height (mm) |
|---|---|---|---|---|---|---|---|
| MCP6291IDBVR | SOT-23 | DBV | 5 | 3000 | 210.0 | 185.0 | 35.0 |
| MCP6291IDBVR | SOT-23 | DBV | 5 | 3000 | 210.0 | 185.0 | 35.0 |
| MCP6291IDBVRG4 | SOT-23 | DBV | 5 | 3000 | 210.0 | 185.0 | 35.0 |
| MCP6291IDCKR | SC70 | DCK | 5 | 3000 | 208.0 | 191.0 | 35.0 |
| MCP6292IDDFR | SOT-23-THIN | DDF | 8 | 3000 | 210.0 | 185.0 | 35.0 |
| MCP6292IDGKR | VSSOP | DGK | 8 | 2500 | 356.0 | 356.0 | 36.0 |
| MCP6292IDGKT | VSSOP | DGK | 8 | 250 | 353.0 | 353.0 | 32.0 |
| MCP6292IDR | SOIC | D | 8 | 2500 | 353.0 | 353.0 | 32.0 |
| MCP6294IDR | SOIC | D | 14 | 2500 | 353.0 | 353.0 | 32.0 |
| MCP6294IPWR | TSSOP | PW | 14 | 2000 | 353.0 | 353.0 | 32.0 |
| MCP6294IPWR | TSSOP | PW | 14 | 2000 | 366.0 | 364.0 | 50.0 |
| MCP6294IPWT | TSSOP | PW | 14 | 250 | 353.0 | 353.0 | 32.0 |

# PACKAGE OUTLINE

## DCK0005A

## SOT - 1.1 max height

SMALL OUTLINE TRANSISTOR

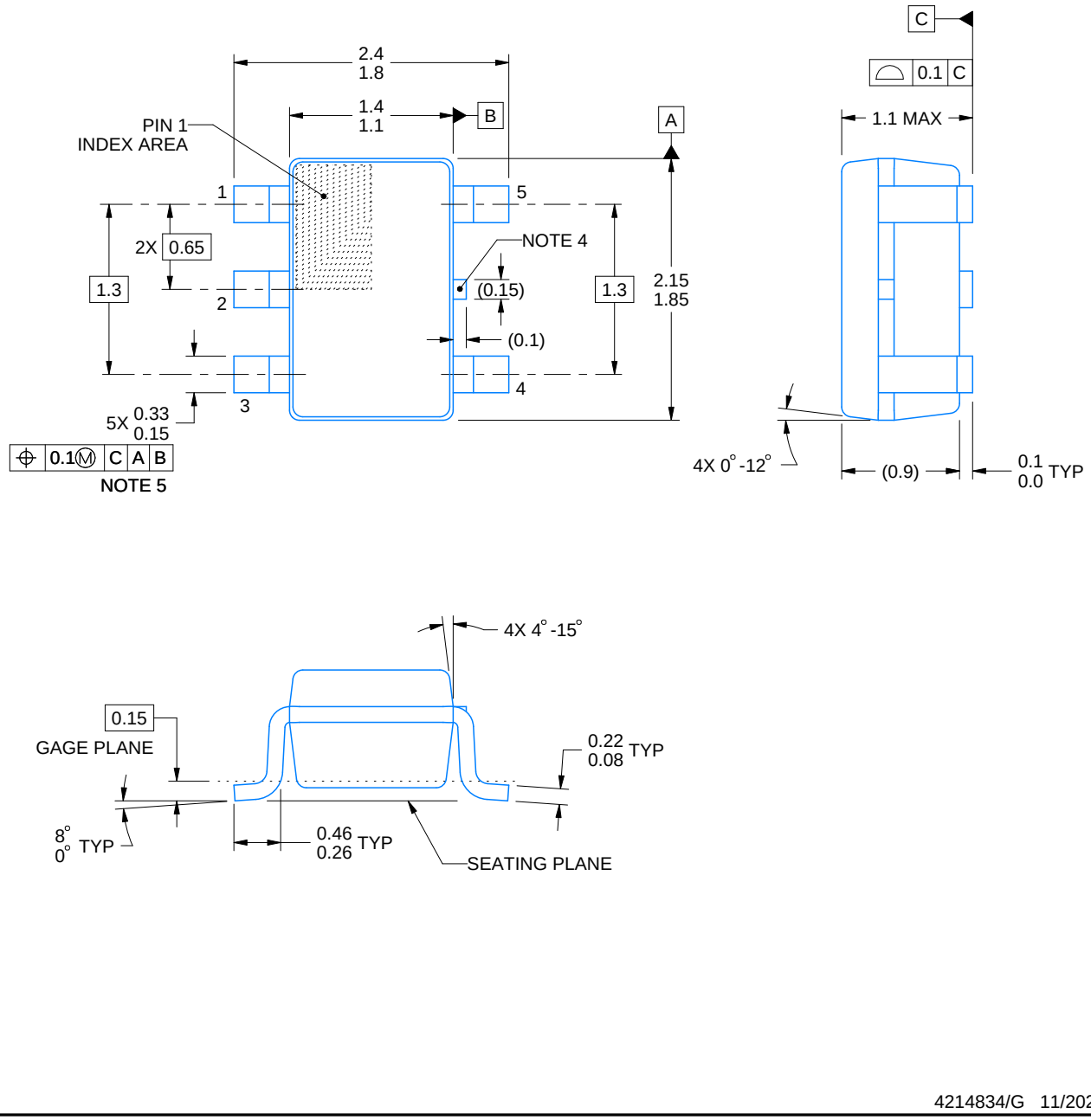


4214834/G 11/2024

NOTES:

1. All linear dimensions are in millimeters. Any dimensions in parenthesis are for reference only. Dimensioning and tolerancing per ASME Y14.5M.
2. This drawing is subject to change without notice.
3. Refernce JEDEC MO-203.
4. Support pin may differ or may not be present.
5. Lead width does not comply with JEDEC.
6. Body dimensions do not include mold flash, protrusions, or gate burrs. Mold flash, protrusions, or gate burrs shall not exceed 0.25mm per side

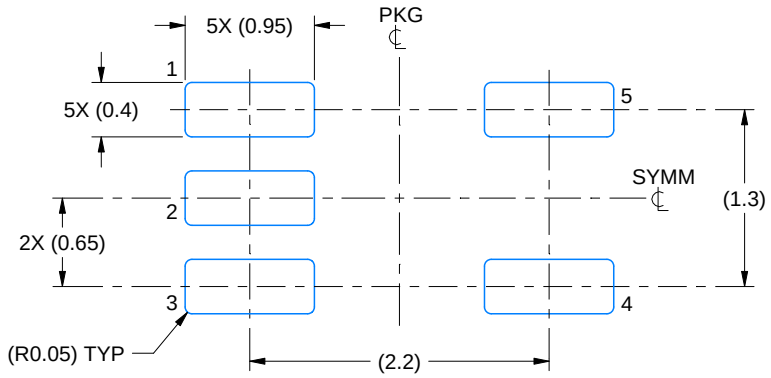


LAND PATTERN EXAMPLE
EXPOSED METAL SHOWN
SCALE:18X

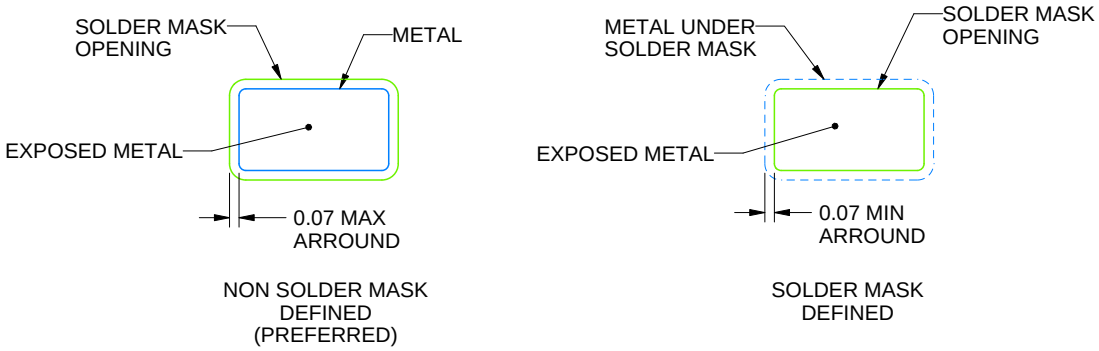


SOLDER MASK DETAILS

4214834/G 11/2024

NOTES: (continued)

7. Publication IPC-7351 may have alternate designs.
8. Solder mask tolerances between and around signal pads can vary based on board fabrication site.

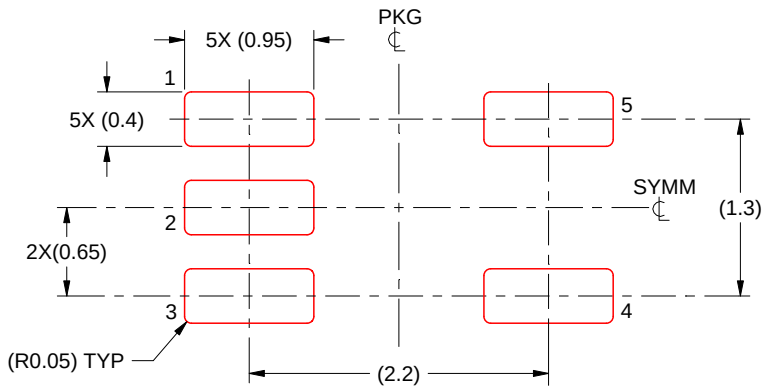


SOLDER PASTE EXAMPLE
BASED ON 0.125 THICK STENCIL
SCALE:18X

4214834/G 11/2024

NOTES: (continued)

9. Laser cutting apertures with trapezoidal walls and rounded corners may offer better paste release. IPC-7525 may have alternate design recommendations.
10. Board assembly site may have different recommendations for stencil design.

# PACKAGE OUTLINE

## DDF0008A

## SOT-23-THIN - 1.1 mm max height

PLASTIC SMALL OUTLINE

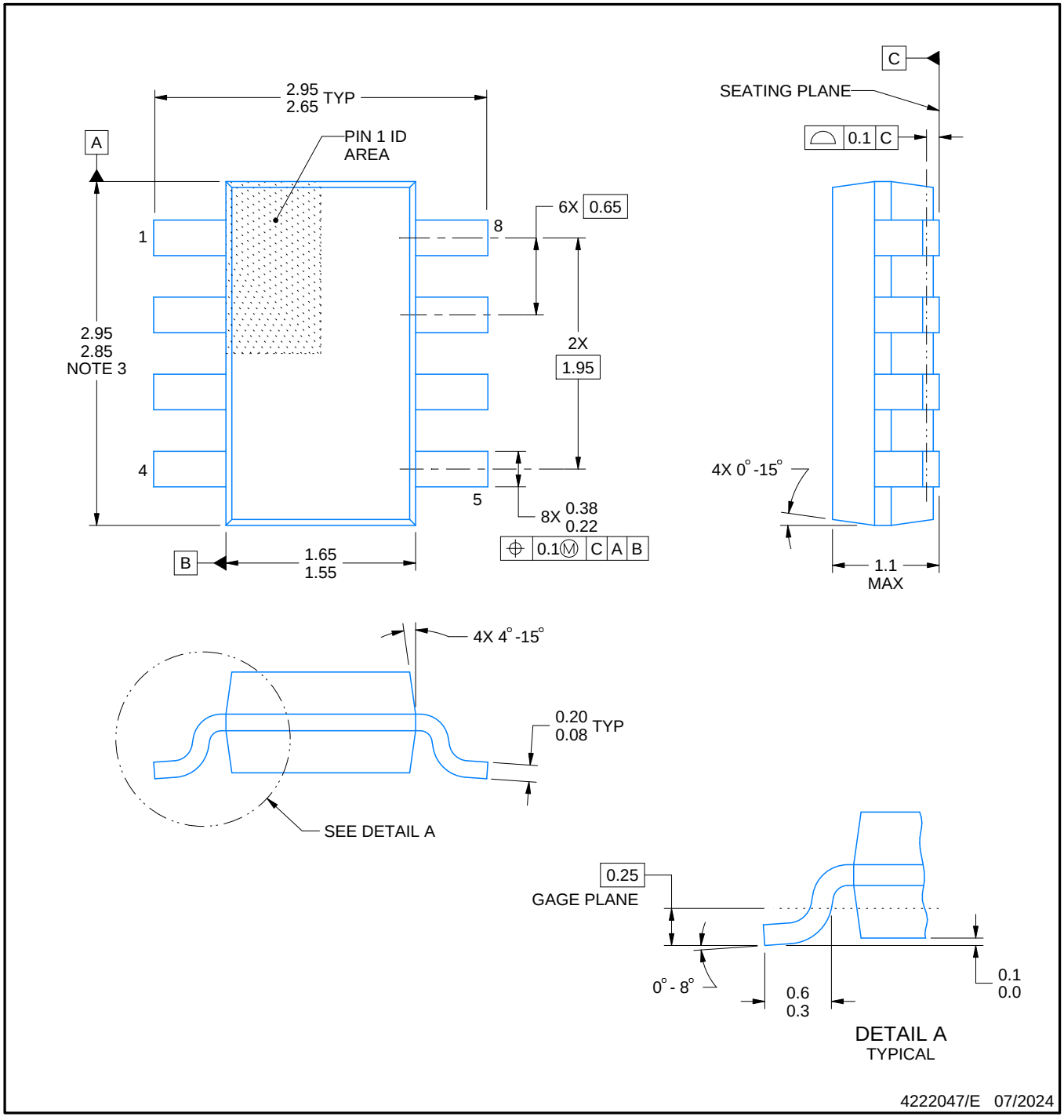


NOTES:

1. All linear dimensions are in millimeters. Any dimensions in parenthesis are for reference only. Dimensioning and tolerancing per ASME Y14.5M.
2. This drawing is subject to change without notice.
3. This dimension does not include mold flash, protrusions, or gate burrs. Mold flash, protrusions, or gate burrs shall not exceed 0.15 mm per side.

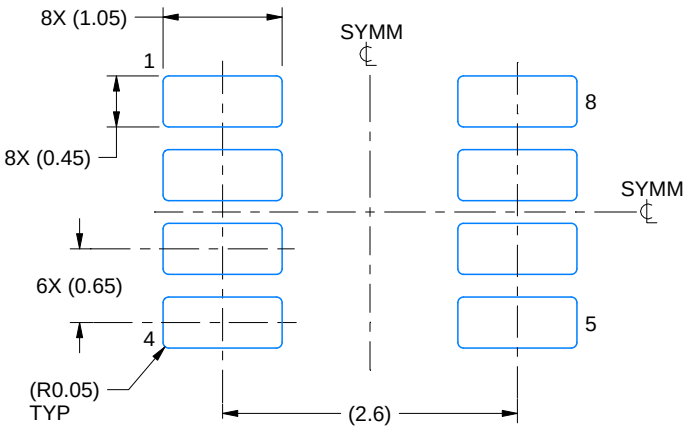


LAND PATTERN EXAMPLE
EXPOSED METAL SHOWN
SCALE:15X

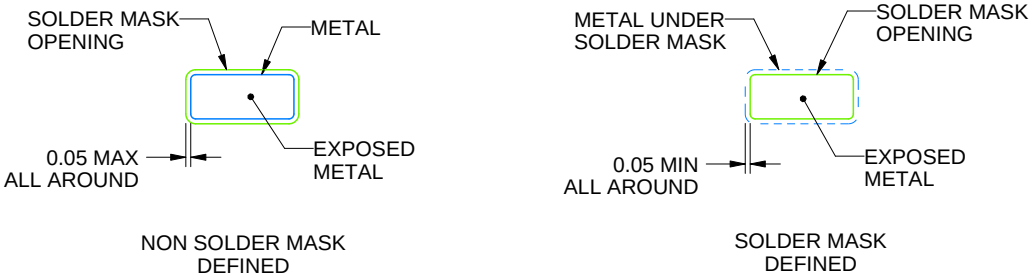


SOLDER MASK DETAILS

4222047/E 07/2024

NOTES: (continued)

4. Publication IPC-7351 may have alternate designs.
5. Solder mask tolerances between and around signal pads can vary based on board fabrication site.

# EXAMPLE STENCIL DESIGN

## DDF0008A

## SOT-23-THIN - 1.1 mm max height

PLASTIC SMALL OUTLINE

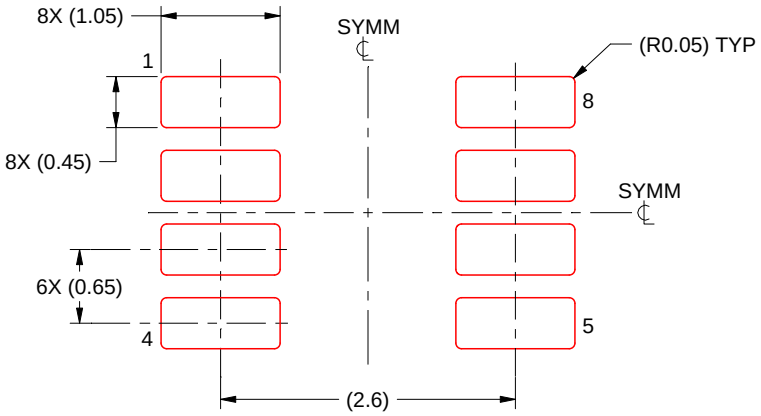


SOLDER PASTE EXAMPLE
BASED ON 0.125 mm THICK STENCIL
SCALE:15X

4222047/E 07/2024

NOTES: (continued)

6. Laser cutting apertures with trapezoidal walls and rounded corners may offer better paste release. IPC-7525 may have alternate design recommendations.
7. Board assembly site may have different recommendations for stencil design.

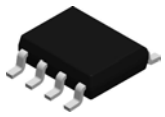

# PACKAGE OUTLINE

## D0008A

## SOIC - 1.75 mm max height

SMALL OUTLINE INTEGRATED CIRCUIT

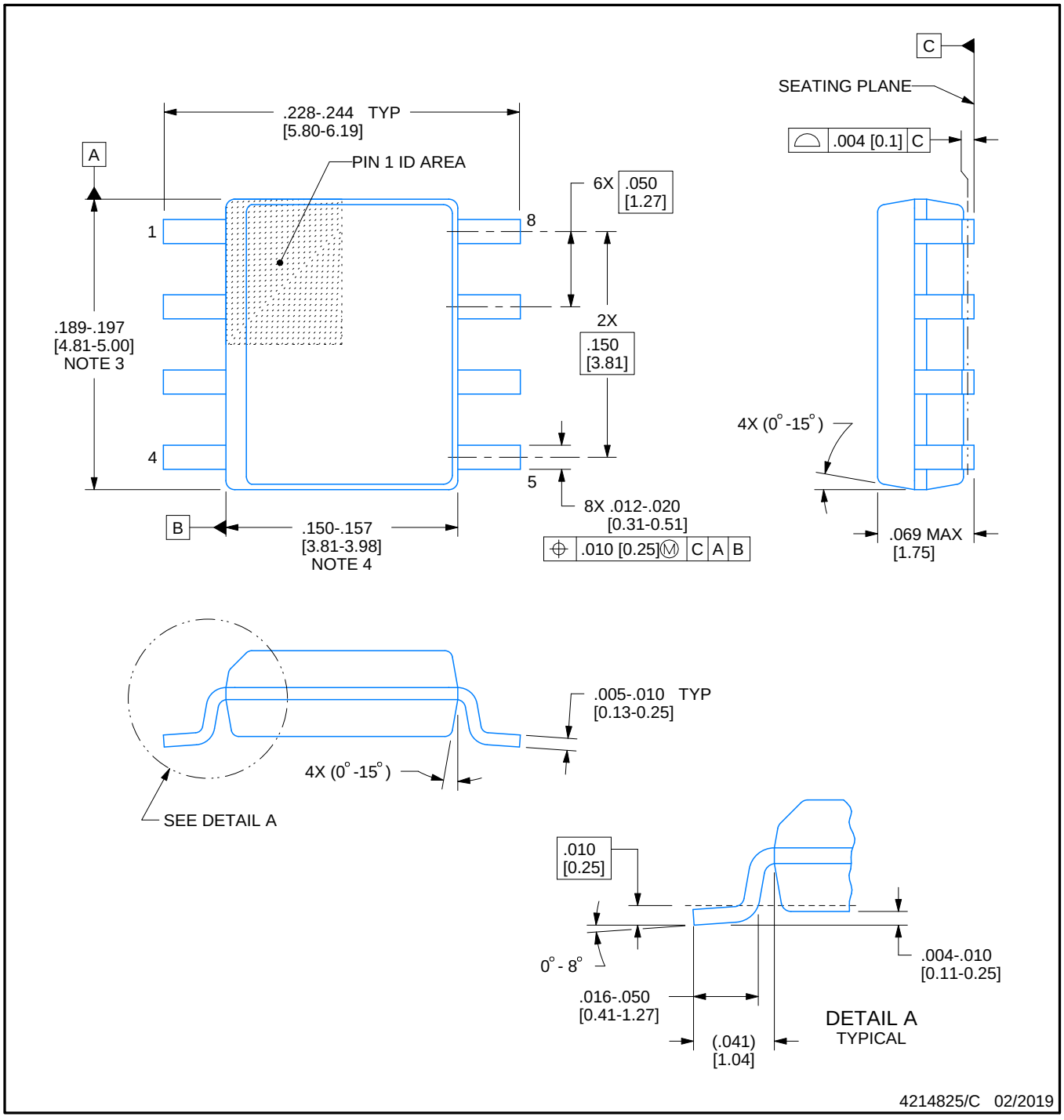


NOTES:

1. Linear dimensions are in inches [millimeters]. Dimensions in parenthesis are for reference only. Controlling dimensions are in inches. Dimensioning and tolerancing per ASME Y14.5M.
2. This drawing is subject to change without notice.
3. This dimension does not include mold flash, protrusions, or gate burrs. Mold flash, protrusions, or gate burrs shall not exceed .006 [0.15] per side.
4. This dimension does not include interlead flash.
5. Reference JEDEC registration MS-012, variation AA.

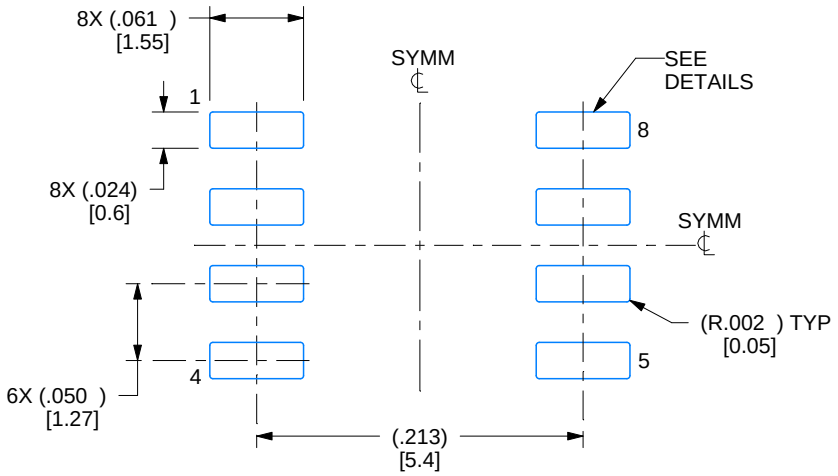


LAND PATTERN EXAMPLE
EXPOSED METAL SHOWN
SCALE:8X

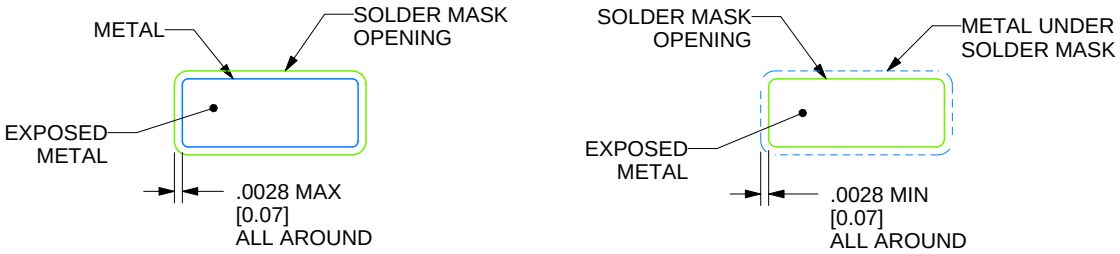


SOLDER MASK DETAILS

4214825/C 02/2019

NOTES: (continued)

6. Publication IPC-7351 may have alternate designs.
7. Solder mask tolerances between and around signal pads can vary based on board fabrication site.

# EXAMPLE STENCIL DESIGN

## D0008A

## SOIC - 1.75 mm max height

SMALL OUTLINE INTEGRATED CIRCUIT

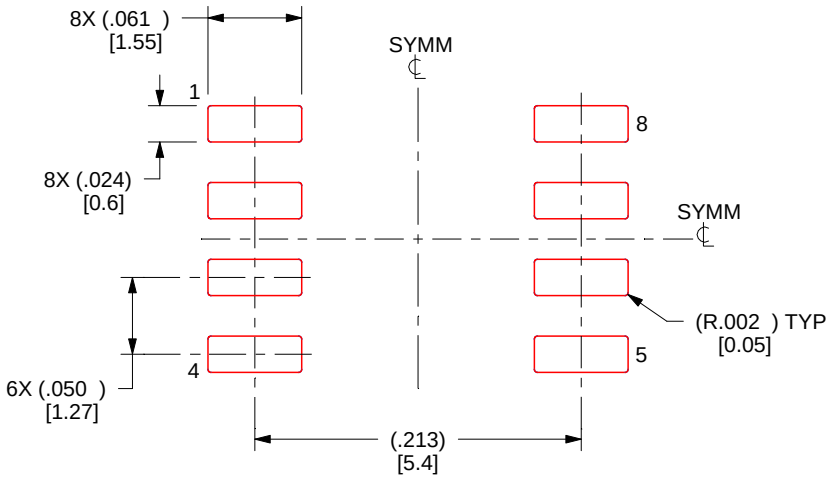


SOLDER PASTE EXAMPLE
BASED ON .005 INCH [0.125 MM] THICK STENCIL
SCALE:8X

4214825/C 02/2019

NOTES: (continued)

8. Laser cutting apertures with trapezoidal walls and rounded corners may offer better paste release. IPC-7525 may have alternate design recommendations.
9. Board assembly site may have different recommendations for stencil design.

# PACKAGE OUTLINE

## PW0014A

## TSSOP - 1.2 mm max height

SMALL OUTLINE PACKAGE

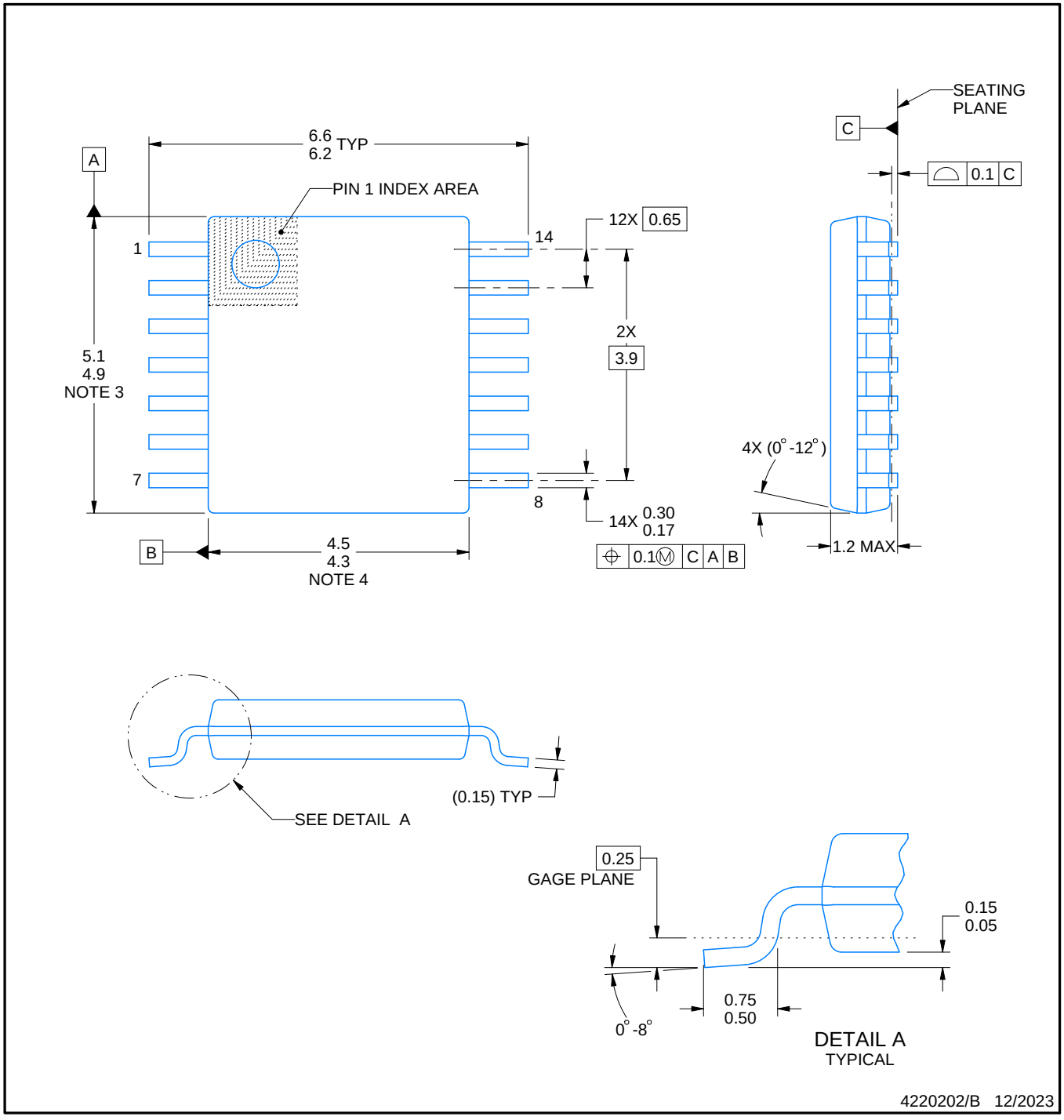


NOTES:

1. All linear dimensions are in millimeters. Any dimensions in parenthesis are for reference only. Dimensioning and tolerancing per ASME Y14.5M.
2. This drawing is subject to change without notice.
3. This dimension does not include mold flash, protrusions, or gate burrs. Mold flash, protrusions, or gate burrs shall not exceed 0.15 mm per side.
4. This dimension does not include interlead flash. Interlead flash shall not exceed 0.25 mm per side.
5. Reference JEDEC registration MO-153.

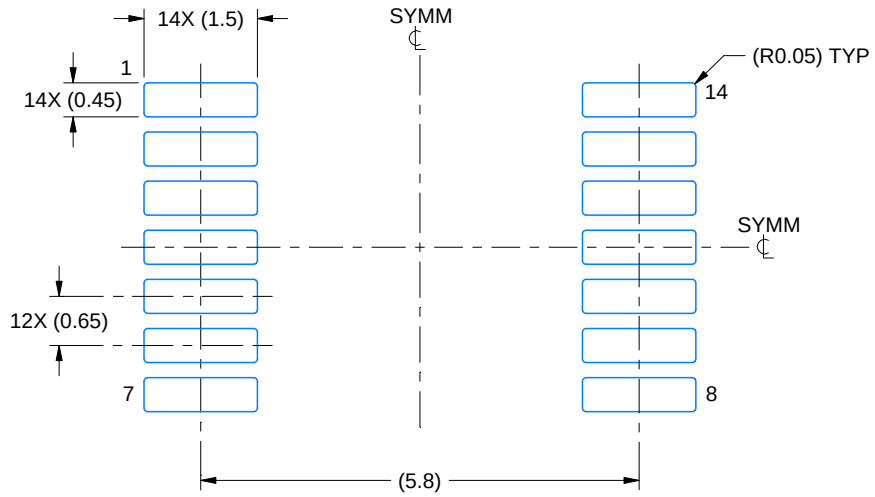


LAND PATTERN EXAMPLE
EXPOSED METAL SHOWN
SCALE: 10X

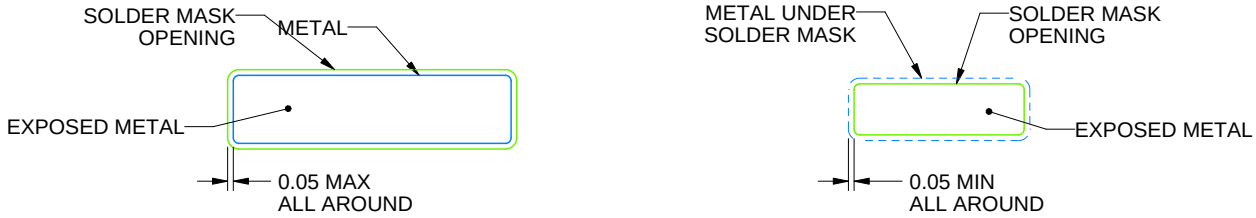


SOLDER MASK DETAILS

4220202/B 12/2023

NOTES: (continued)

6. Publication IPC-7351 may have alternate designs.
7. Solder mask tolerances between and around signal pads can vary based on board fabrication site.

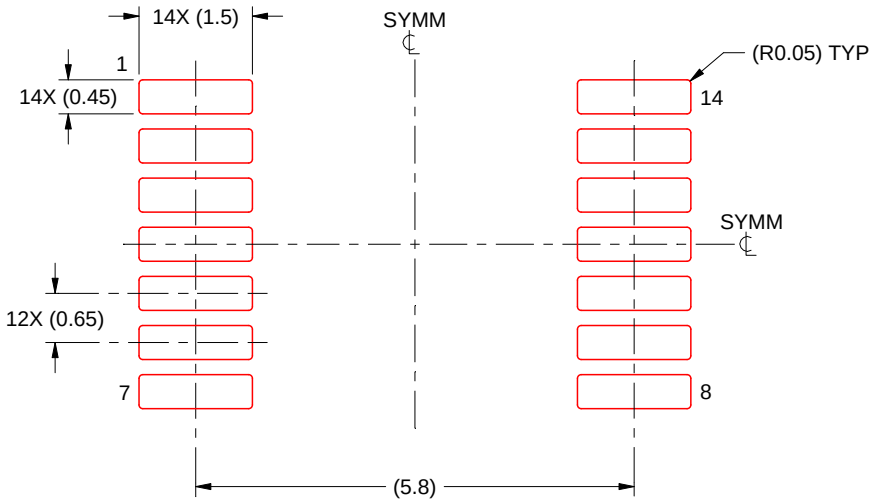


SOLDER PASTE EXAMPLE
BASED ON 0.125 mm THICK STENCIL
SCALE: 10X

4220202/B 12/2023

NOTES: (continued)

8. Laser cutting apertures with trapezoidal walls and rounded corners may offer better paste release. IPC-7525 may have alternate design recommendations.
9. Board assembly site may have different recommendations for stencil design.

# PACKAGE OUTLINE

## DBV0005A

## SOT-23 - 1.45 mm max height

SMALL OUTLINE TRANSISTOR

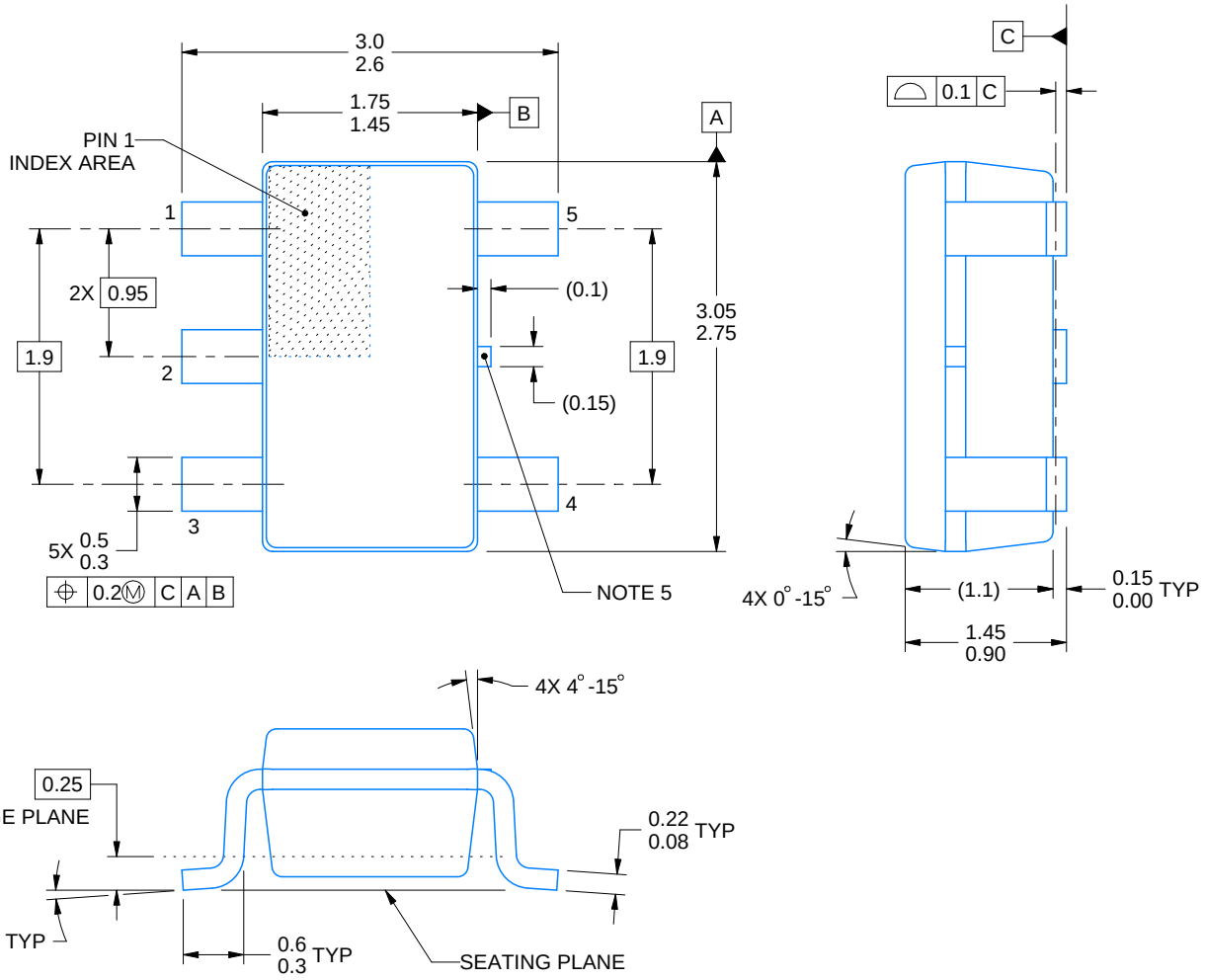


4214839/K 08/2024

NOTES:

1. All linear dimensions are in millimeters. Any dimensions in parenthesis are for reference only. Dimensioning and tolerancing per ASME Y14.5M.
2. This drawing is subject to change without notice.
3. Refernce JEDEC MO-178.
4. Body dimensions do not include mold flash, protrusions, or gate burrs. Mold flash, protrusions, or gate burrs shall not exceed 0.25 mm per side.
5. Support pin may differ or may not be present.

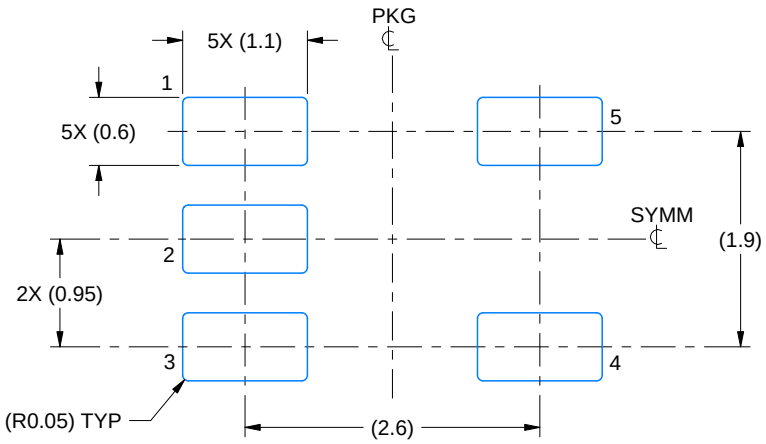


LAND PATTERN EXAMPLE
EXPOSED METAL SHOWN
SCALE:15X

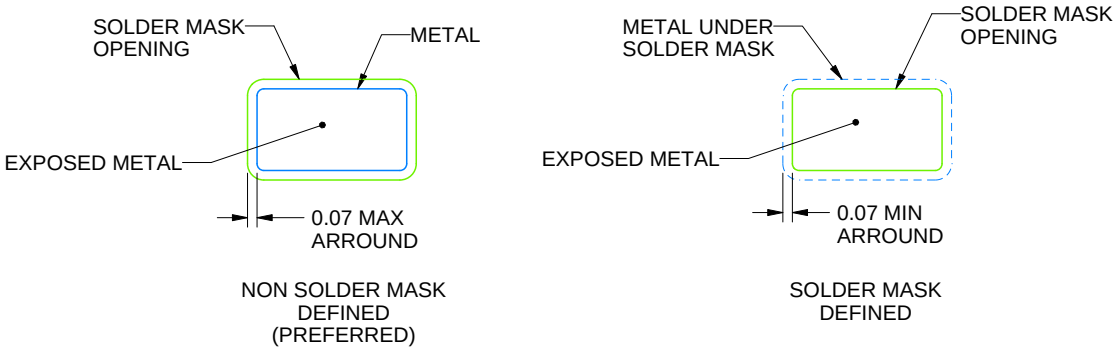


SOLDER MASK DETAILS

4214839/K 08/2024

NOTES: (continued)

6. Publication IPC-7351 may have alternate designs.
7. Solder mask tolerances between and around signal pads can vary based on board fabrication site.

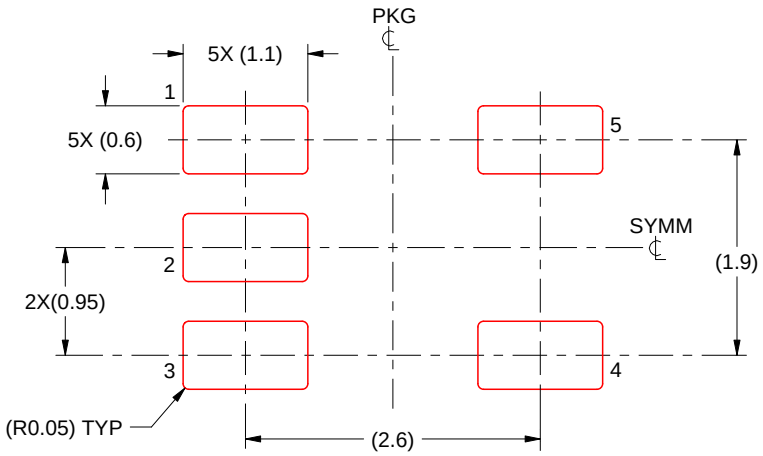


SOLDER PASTE EXAMPLE
BASED ON 0.125 mm THICK STENCIL
SCALE:15X

4214839/K 08/2024

NOTES: (continued)

8. Laser cutting apertures with trapezoidal walls and rounded corners may offer better paste release. IPC-7525 may have alternate design recommendations.
9. Board assembly site may have different recommendations for stencil design.

# PACKAGE OUTLINE

## DGK0008A

## VSSOP - 1.1 mm max height

SMALL OUTLINE PACKAGE

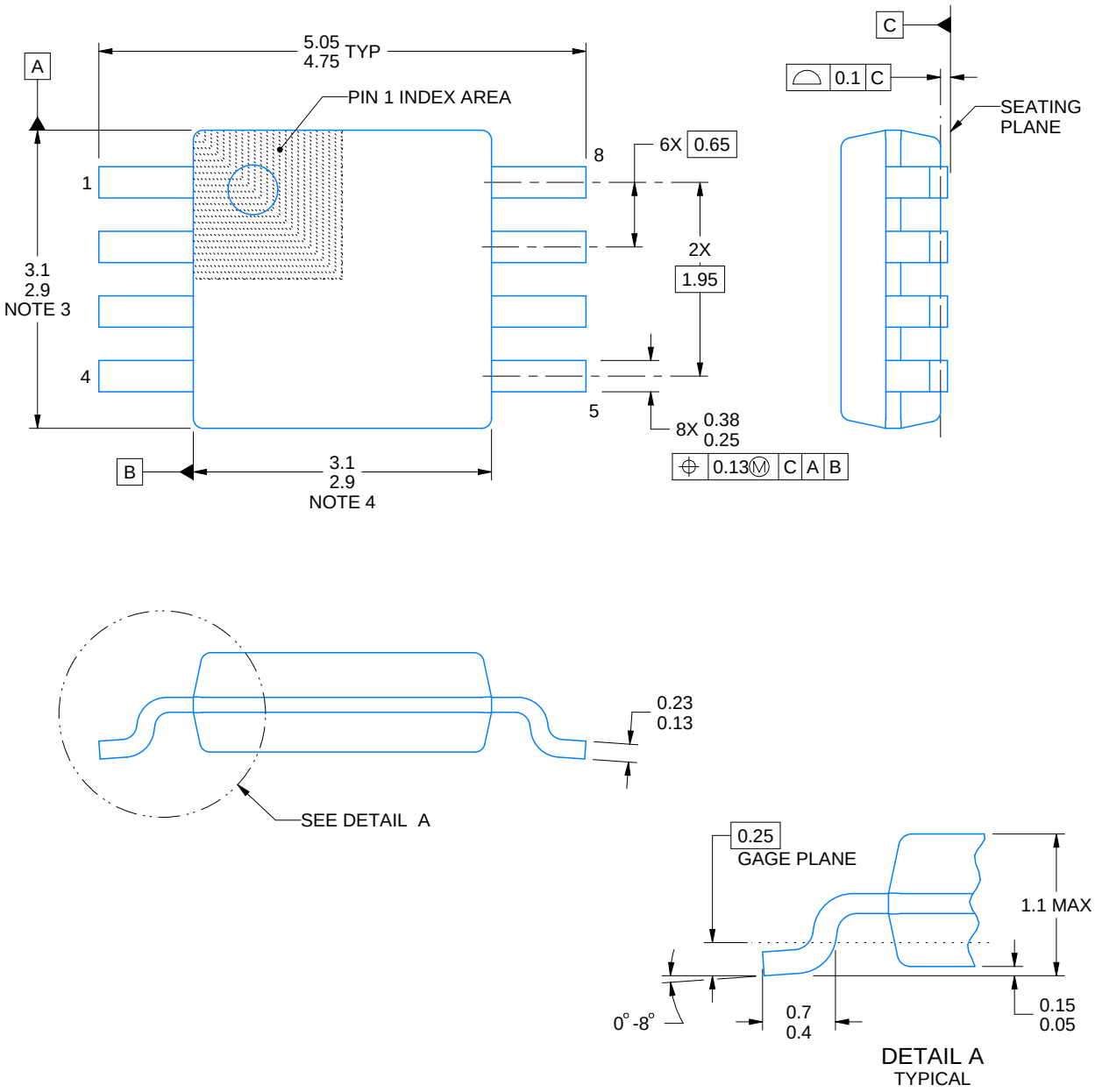


PowerPAD is a trademark of Texas Instruments.

NOTES:

1. All linear dimensions are in millimeters. Any dimensions in parenthesis are for reference only. Dimensioning and tolerancing per ASME Y14.5M.
2. This drawing is subject to change without notice.
3. This dimension does not include mold flash, protrusions, or gate burrs. Mold flash, protrusions, or gate burrs shall not exceed 0.15 mm per side.
4. This dimension does not include interlead flash. Interlead flash shall not exceed 0.25 mm per side.
5. Reference JEDEC registration MO-187.

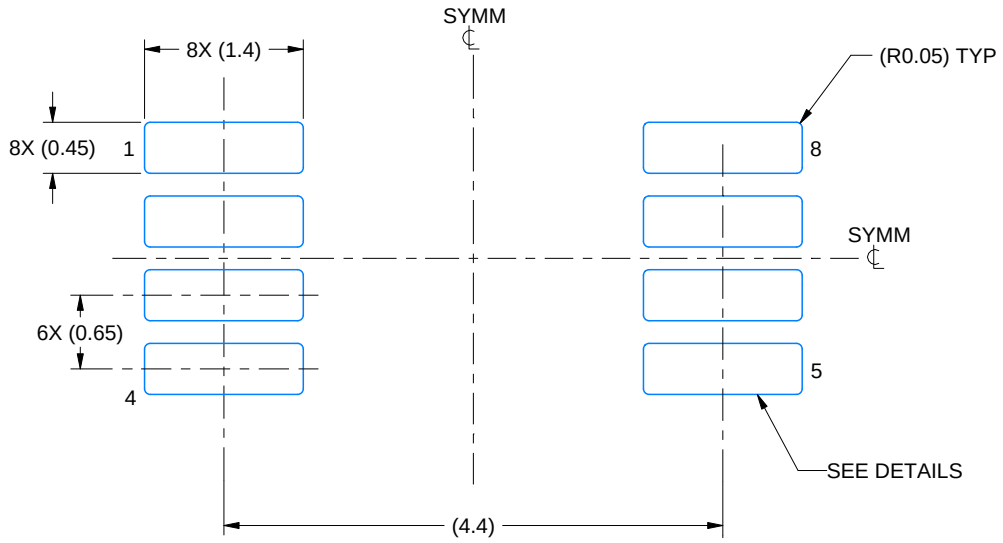


LAND PATTERN EXAMPLE
EXPOSED METAL SHOWN
SCALE: 15X

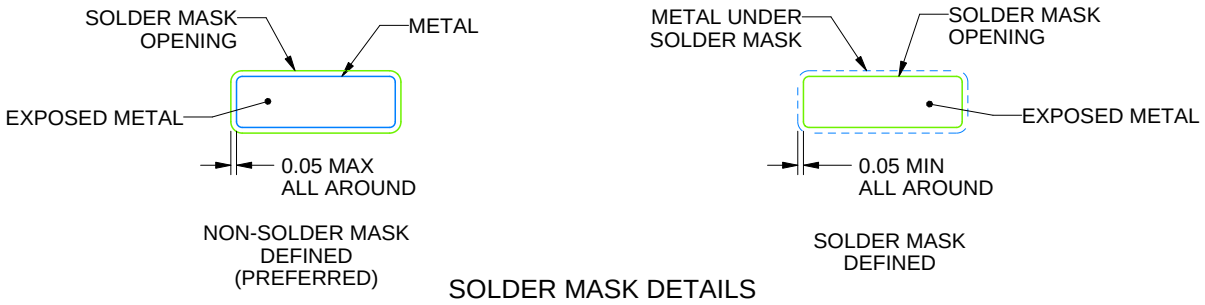


SOLDER MASK DETAILS

4214862/A 04/2023

NOTES: (continued)

6. Publication IPC-7351 may have alternate designs.
7. Solder mask tolerances between and around signal pads can vary based on board fabrication site.
8. Vias are optional depending on application, refer to device data sheet. If any vias are implemented, refer to their locations shown on this view. It is recommended that vias under paste be filled, plugged or tented.
9. Size of metal pad may vary due to creepage requirement.

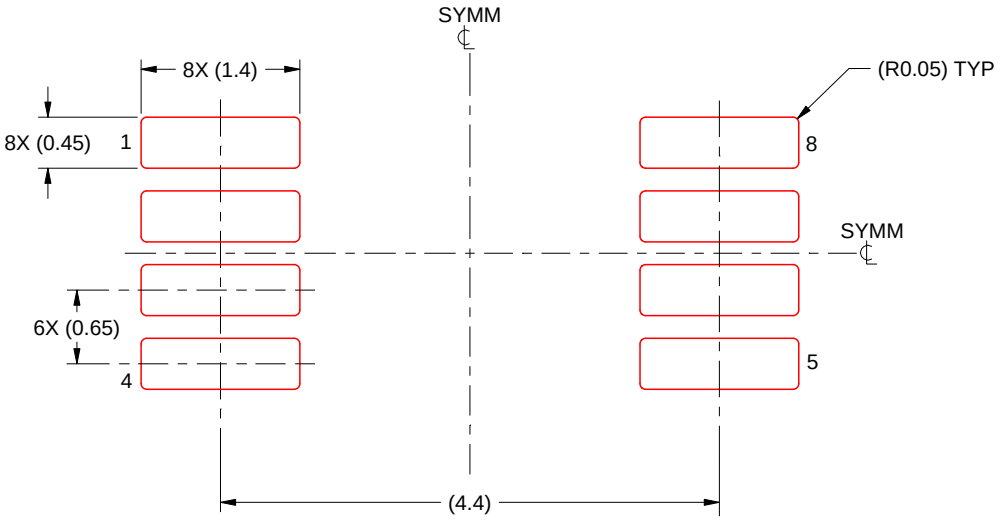


SOLDER PASTE EXAMPLE
SCALE: 15X

4214862/A 04/2023

NOTES: (continued)

11. Laser cutting apertures with trapezoidal walls and rounded corners may offer better paste release. IPC-7525 may have alternate design recommendations.
12. Board assembly site may have different recommendations for stencil design.

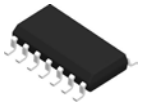

# PACKAGE OUTLINE

## D0014A

## SOIC - 1.75 mm max height

SMALL OUTLINE INTEGRATED CIRCUIT

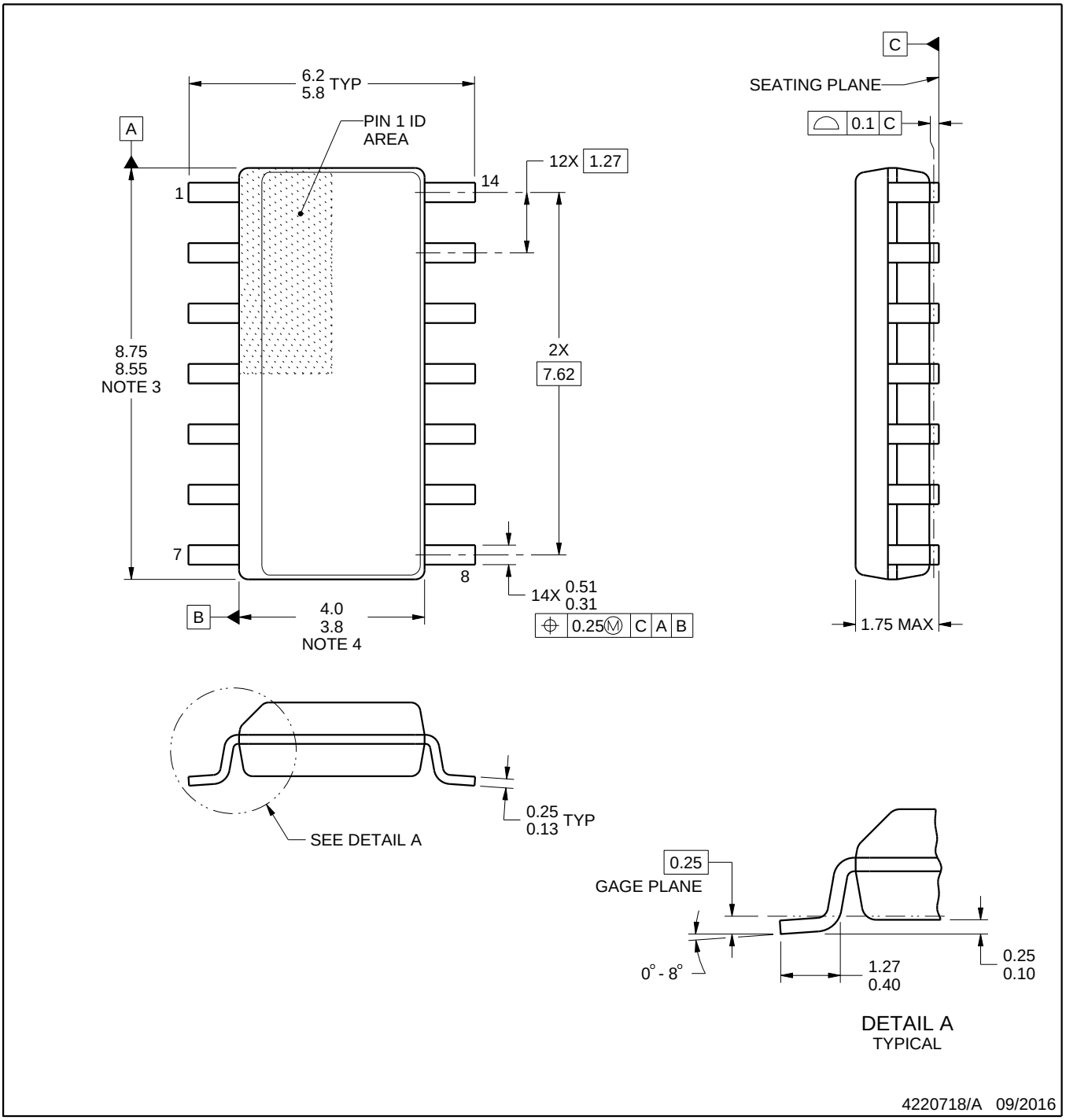


NOTES:

1. All linear dimensions are in millimeters. Dimensions in parenthesis are for reference only. Dimensioning and tolerancing per ASME Y14.5M.
2. This drawing is subject to change without notice.
3. This dimension does not include mold flash, protrusions, or gate burrs. Mold flash, protrusions, or gate burrs shall not exceed 0.15 mm, per side.
4. This dimension does not include interlead flash. Interlead flash shall not exceed 0.43 mm, per side.
5. Reference JEDEC registration MS-012, variation AB.

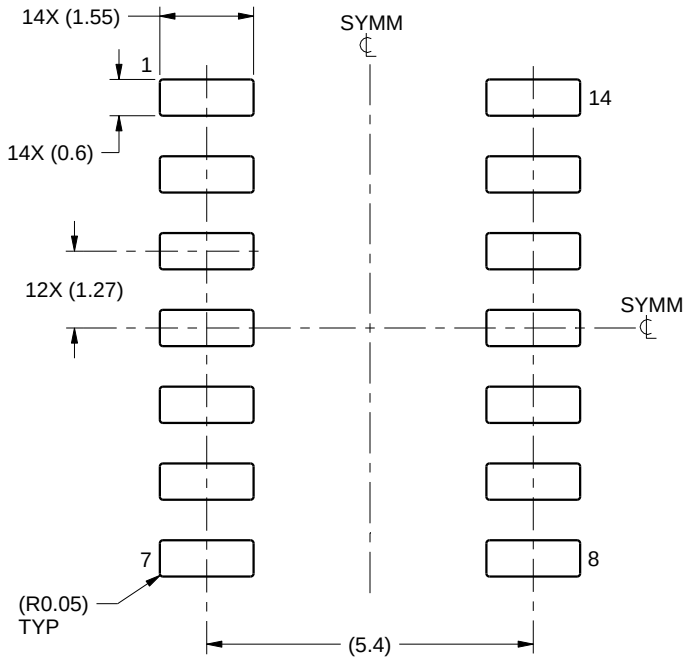


LAND PATTERN EXAMPLE
SCALE:8X

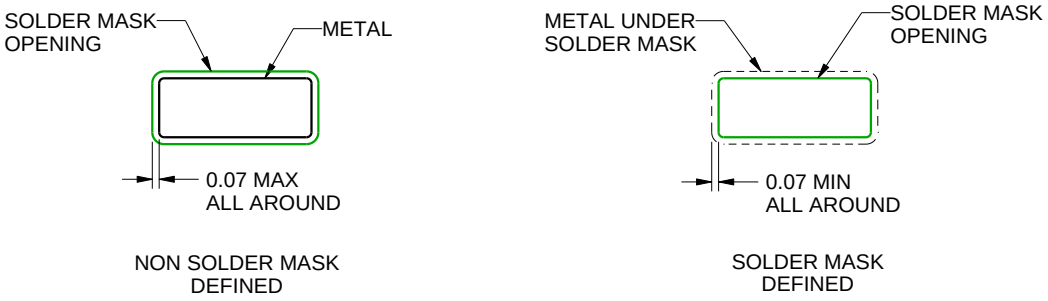


SOLDER MASK DETAILS

4220718/A 09/2016

NOTES: (continued)

6. Publication IPC-7351 may have alternate designs.
7. Solder mask tolerances between and around signal pads can vary based on board fabrication site.

# EXAMPLE STENCIL DESIGN

## D0014A

## SOIC - 1.75 mm max height

SMALL OUTLINE INTEGRATED CIRCUIT

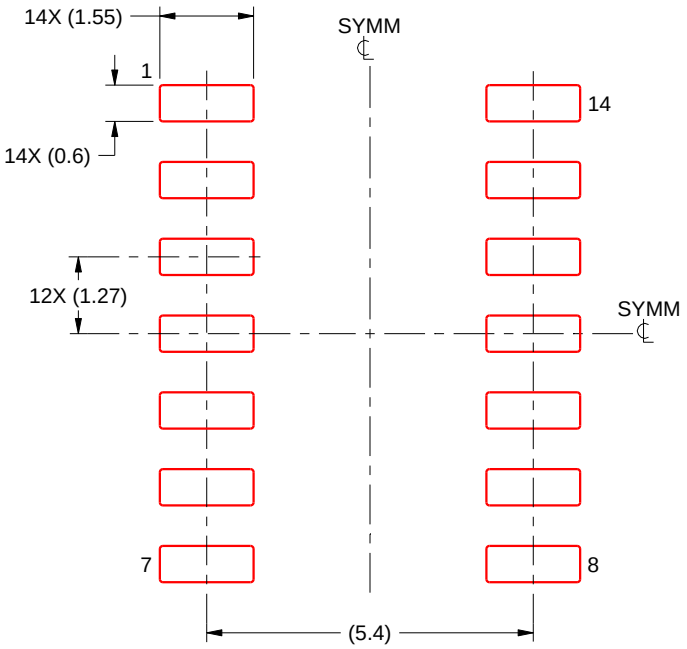


SOLDER PASTE EXAMPLE
BASED ON 0.125 mm THICK STENCIL
SCALE:8X

4220718/A 09/2016

NOTES: (continued)

8. Laser cutting apertures with trapezoidal walls and rounded corners may offer better paste release. IPC-7525 may have alternate design recommendations.
9. Board assembly site may have different recommendations for stencil design.

# 重要通知和免责声明

TI“按原样”提供技术和可靠性数据（包括数据表）、设计资源（包括参考设计）、应用或其他设计建议、网络工具、安全信息和其他资源，不保证没有瑕疵且不做出任何明示或暗示的担保，包括但不限于对适销性、与某特定用途的适用性或不侵犯任何第三方知识产权的暗示担保。

这些资源可供使用 TI 产品进行设计的熟练开发人员使用。您将自行承担以下全部责任：(1) 针对您的应用选择合适的 TI 产品，(2) 设计、验证并测试您的应用，(3) 确保您的应用满足相应标准以及任何其他安全、安保法规或其他要求。

这些资源如有变更，恕不另行通知。TI 授权您仅可将这些资源用于研发本资源所述的 TI 产品的相关应用。严禁以其他方式对这些资源进行复制或展示。您无权使用任何其他 TI 知识产权或任何第三方知识产权。对于因您对这些资源的使用而对 TI 及其代表造成的任何索赔、损害、成本、损失和债务，您将全额赔偿，TI 对此概不负责。

TI 提供的产品受 TI 销售条款)、TI 通用质量指南 或 ti.com 上其他适用条款或 TI 产品随附的其他适用条款的约束。TI 提供这些资源并不会扩展或以其他方式更改 TI 针对 TI 产品发布的适用的担保或担保免责声明。 除非德州仪器 (TI) 明确将某产品指定为定制产品或客户特定产品，否则其产品均为按确定价格收入目录的标准通用器件。

TI 反对并拒绝您可能提出的任何其他或不同的条款。

版权所有 © 2026，德州仪器 (TI) 公司

最后更新日期：2025 年 10 月