LF411QML Low Offset, Low Drift JFET Input Operational Amplifier

Check for Samples: LF411QML-SP

FEATURES

- **Available with Radiation Specification**
  - **ELDRS FREE 100 krad(Si)**
- **Internally Trimmed Offset Voltage: 0.5 mV(Typ)**
- **Input Offset Voltage Drift: 10 μV/°C**
- **Low Input Bias Current: 50 pA**
- **Low Input Noise Current: 0.01 pA/√Hz**
- **Wide Gain Bandwidth: 3 MHz**
- **High Slew Rate: 10V/μs**
- **Low Supply Current: 1.8 mA**
- **High Input Impedance: 10^{12}Ω**
- **Low Total Harmonic Distortion: A_V = 10, R_L = 10KΩ, V_O = 20V_{P-P}, BW = 20Hz - 20KHz <0.02%**
- **Low 1/f Noise Corner: 50 Hz**
- **Fast Settling Time to 0.01%: 2 μs**

DESCRIPTION

This device is a low cost, high speed, JFET input operational amplifier with very low input offset voltage and ensured input offset voltage drift. It requires low supply current yet maintains a large gain bandwidth product and fast slew rate. In addition, well matched high voltage JFET input devices provide very low input bias and offset currents. The LF411QML is pin compatible with the standard LM741 allowing designers to immediately upgrade the overall performance of existing designs.

This amplifier may be used in applications such as high speed integrators, fast D/A converters, sample and hold circuits and many other circuits requiring low input offset voltage and drift, low input bias current, high input impedance, high slew rate and wide bandwidth.

Connection Diagram

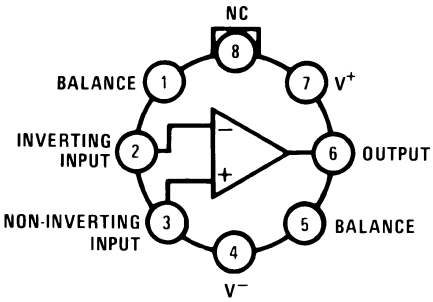

Pin 4 connected to case.

Figure 1. SDIP Package

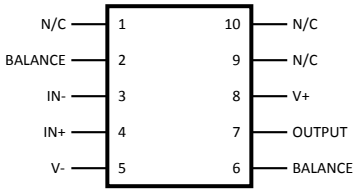

Figure 2. 10LD CLGA Package

Please be aware that an important notice concerning availability, standard warranty, and use in critical applications of Texas Instruments semiconductor products and disclaimers thereto appears at the end of this data sheet.

BI-FET II is a trademark of dcl_owner.
All other trademarks are the property of their respective owners.

PRODUCTION DATA information is current as of publication date. Products conform to specifications per the terms of the Texas Instruments standard warranty. Production processing does not necessarily include testing of all parameters.

Copyright © 2005–2013, Texas Instruments Incorporated

Simplified Schematic

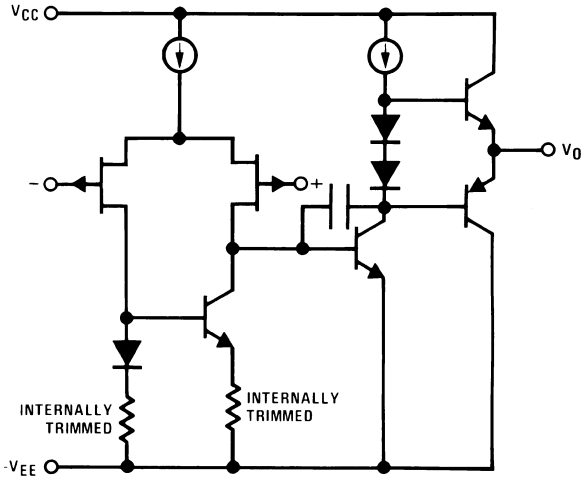

Detailed Schematic

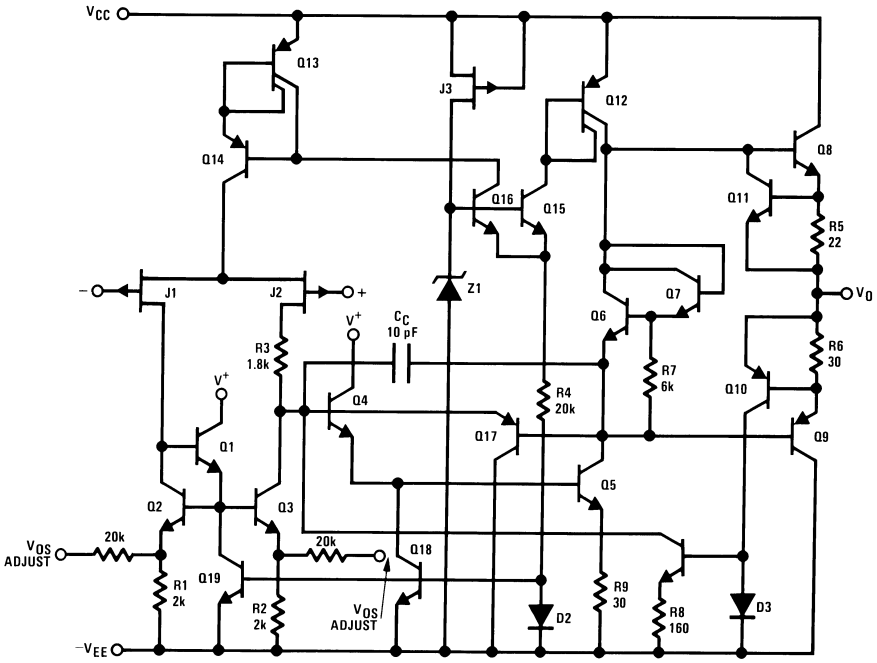

These devices have limited built-in ESD protection. The leads should be shorted together or the device placed in conductive foam during storage or handling to prevent electrostatic damage to the MOS gates.

Copyright © 2005–2013, Texas Instruments Incorporated

Absolute Maximum Ratings[1]

Supply Voltage			±18V
Differential Input Voltage			±30V
Input Voltage Range[2]			±15V
Output Short Circuit Duration			Continuous
Power Dissipation[3][4]		SDIP Package	670mW
		CLGA Package	670mW
T_{Jmax}	H Package		150°C
	WG Package		150°C
Thermal Resistance	θ_{JA}	SDIP Package Still Air	162°C/W
		SDIP Package 500LF/Min Air Flow	65°C/W
		CLGA Package Still Air	170°C/W
		CLGA Package 500LF/Min Air Flow	120°C/W
	θ_{JC}	SDIP Package	20°C/W
		CLGA Package	26°C/W
Operating Temperature Range			−55°C ≤ T_A ≤ 125°C
Storage Temperature Range			−65°C ≤ T_A ≤ 150°C
Lead Temperature (Soldering, 10 seconds)			260°C
Package Weight (Typical)		SDIP Package	TBD
		CLGA Package	220mg
ESD Tolerance [5]			750V

(1) Absolute Maximum Ratings indicate limits beyond which damage to the device may occur. Operating Ratings indicate conditions for which the device is functional, but do not ensure specific performance limits. For ensured specifications and test conditions, see the Electrical Characteristics. The ensured specifications apply only for the test conditions listed. Some performance characteristics may degrade when the device is not operated under the listed test conditions.
(2) Unless otherwise specified the absolute maximum negative input voltage is equal to the negative power supply voltage.
(3) The maximum power dissipation must be derated at elevated temperatures and is dictated by T_{Jmax} (maximum junction temperature), θ_{JA} (package junction to ambient thermal resistance), and T_A (ambient temperature). The maximum allowable power dissipation at any temperature is $P_{Dmax} = (T_{Jmax} - T_A)/\theta_{JA}$ or the number given in the Absolute Maximum Ratings, whichever is lower.
(4) Max. Power Dissipation is defined by the package characteristics. Operating the part near the Max. Power Dissipation may cause the part to operate outside ensured limits.
(5) Human body model, 100pF discharged through 1.5KΩ.

Copyright © 2005–2013, Texas Instruments Incorporated

Quality Conformance Inspection

Table 1. Mil-Std-883, Method 5005 - Group A

Subgroup	Description	Temp °C
1	Static tests at	+25
2	Static tests at	+125
3	Static tests at	-55
4	Dynamic tests at	+25
5	Dynamic tests at	+125
6	Dynamic tests at	-55
7	Functional tests at	+25
8A	Functional tests at	+125
8B	Functional tests at	-55
9	Switching tests at	+25
10	Switching tests at	+125
11	Switching tests at	-55
12	Settling time at	+25
13	Settling time at	+125
14	Settling time at	-55

Copyright © 2005–2013, Texas Instruments Incorporated

LF411 883 Electrical Characteristics
DC Parameters

The following conditions apply, unless otherwise specified.
DC: V_{CC} = ±15V, V_{CM} = 0V, R_S = 0Ω

Symbol	Parameter	Conditions	Notes	Min	Max	Unit	Sub-groups
V_{IO}	Input Offset Voltage	R_S = 10KΩ		-2.0	2.0	mV	1
				-3.7	3.7	mV	2
				-3.3	3.3	mV	3
I_{IO}	Input Offset Current			-0.1	0.1	nA	1
			See (1)	-25	25	nA	2
$\pm I_{IB}$	Input Bias Current			-0.2	0.2	nA	1
			See (1)	-50	50	nA	2
V_{CM}	Input Common Mode Voltage Range		See (2)	±9.0		V	1, 2, 3
CMRR	Common Mode Rejection Ratio	R_S ≤ 10KΩ, V_{CM} = ±9V		70		dB	1, 2, 3
+PSRR	Supply Voltage Rejection Ratio	$+V_{CC}$ = 6V, $-V_{CC}$ = -15V		70		dB	1, 2, 3
-PSRR	Supply Voltage Rejection Ratio	$+V_{CC}$ = 15V, $-V_{CC}$ = -6V		70		dB	1, 2, 3
I_S	Supply Current				3.4	mA	1, 2, 3
$-I_{OS}$	Output Short Circuit Current	$+V_I$ = -11V, $-V_I$ = 11V, R_S = 10KΩ		13	50	mA	1
				6.0	60	mA	2, 3
$+I_{OS}$	Output Short Circuit Current	$+V_I$ = 11V, $-V_I$ = -11V, R_S = 10KΩ		-50	-13	mA	1
				-60	-6.0	mA	2, 3
$+V_{IO\ Adj}$	Input Offset Voltage Adjustment			8.0		mV	1
$-V_{IO\ Adj}$	Input Offset Voltage Adjustment				-8.0	mV	1
$+A_{VS}$	Large Signal Voltage Gain	V_O = 0 to 10V, R_L = 2KΩ	See (3)	25		V/mV	4
		V_O = 0 to 10V, R_L = 2KΩ	See (3)	15		V/mV	5, 6
$-A_{VS}$	Large Signal Voltage Gain	V_O = 0 to -10V, R_L = 2KΩ	See (3)	25		V/mV	4
		V_O = 0 to -10V, R_L = 2KΩ	See (3)	15		V/mV	5, 6
V_O+	Output Voltage Swing	R_L = 10KΩ, $+V_I$ = 11V, $-V_I$ = -11V, R_S = 10KΩ		12		V	4, 5, 6
V_O-	Output Voltage Swing	R_L = 10KΩ, $+V_I$ = -11V, $-V_I$ = 11V, R_S = 10KΩ			-12	V	4, 5, 6

(1) R_S = 10KΩ @ +125°C.
(2) Parameters specified by CMRR test.
(3) Datalog in K = V/mV.

AC Parameters

The following conditions apply, unless otherwise specified.
AC: V_{CC} = ±15V, V_{CM} = 0V, R_S = 0Ω

Symbol	Parameter	Conditions	Notes	Min	Max	Unit	Sub-groups
SR+	Slew Rate	V_O = -5V to 5V		8.0		V/µS	7
SR-	Slew Rate	V_O = 5V to -5V		8.0		V/µS	7
GBW	Gain Bandwidth Product			2.7		MHz	7

Copyright © 2005–2013, Texas Instruments Incorporated

Space Level Electrical Characteristics
DC Parameters

The following conditions apply, unless otherwise specified.
DC: V_{CC} = ±15V, V_{CM} = 0V, R_S = 0Ω

Symbol	Parameter	Conditions	Notes	Min	Max	Unit	Sub-groups
V_{IO}	Input Offset Voltage	R_S = 10KΩ		-2.0	2.0	mV	1
				-3.7	3.7	mV	2
				-3.3	3.3	mV	3
I_{IO}	Input Offset Current			-0.1	0.1	nA	1
			See (1)	-25	25	nA	2
$\pm I_{IB}$	Input Bias Current			-0.2	0.2	nA	1
			See (1)	-50	50	nA	2
V_{CM}	Input Common Mode Voltage Range		See (2)	±9.0		V	1, 2, 3
CMRR	Common Mode Rejection Ratio	R_S ≤ 10KΩ, V_{CM} = ±9V		70		dB	1, 2, 3
+PSRR	Supply Voltage Rejection Ratio	$+V_{CC}$ = 6V, $-V_{CC}$ = -15V		70		dB	1, 2, 3
-PSRR	Supply Voltage Rejection Ratio	$+V_{CC}$ = 15V, $-V_{CC}$ = -6V		70		dB	1, 2, 3
I_S	Supply Current				3.4	mA	1, 2, 3
$-I_{OS}$	Output Short Circuit Current	$+V_I$ = -11V, $-V_I$ = 11V, R_S = 10KΩ		13	50	mA	1
				6.0	60	mA	2, 3
$+I_{OS}$	Output Short Circuit Current	$+V_I$ = 11V, $-V_I$ = -11V, R_S = 10KΩ		-50	-13	mA	1
				-60	-6.0	mA	2, 3
$+V_{IO\ Adj}$	Input Offset Voltage Adjustment			8.0		mV	1
$-V_{IO\ Adj}$	Input Offset Voltage Adjustment				-8.0	mV	1
$+A_{VS}$	Large Signal Voltage Gain	V_O = 0 to 10V, R_L = 2KΩ	See (3)	25		V/mV	4
		V_O = 0 to 10V, R_L = 2KΩ	See (3)	15		V/mV	5, 6
$-A_{VS}$	Large Signal Voltage Gain	V_O = 0 to -10V, R_L = 2KΩ	See (3)	25		V/mV	4
		V_O = 0 to -10V, R_L = 2KΩ	See (3)	15		V/mV	5, 6
V_O+	Output Voltage Swing	R_L = 10KΩ, $+V_I$ = 11V, $-V_I$ = -11V, R_S = 10KΩ		12		V	4, 5, 6
V_O-	Output Voltage Swing	R_L = 10KΩ, $+V_I$ = -11V, $-V_I$ = 11V, R_S = 10KΩ			-12	V	4, 5, 6

(1) R_S = 10KΩ @ +125°C.
(2) Parameters specified by CMRR test.
(3) Datalog in K = V/mV.

AC Parameters

The following conditions apply, unless otherwise specified.
AC: V_{CC} = ±15V, V_{CM} = 0V, R_S = 0Ω

Symbol	Parameter	Conditions	Notes	Min	Max	Unit	Sub-groups
SR+	Slew Rate	V_O = -5V to 5V		8.0		V/µS	7
SR-	Slew Rate	V_O = 5V to -5V		8.0		V/µS	7
GBW	Gain Bandwidth Product			2.7		MHz	7

Copyright © 2005–2013, Texas Instruments Incorporated

Space Level Electrical Characteristics (Continued)
DC Parameters - Drift Values

The following conditions apply, unless otherwise specified.
DC: V_{CC} = ±15V, V_{CM} = 0V, R_S = 0Ω "Delta calculations performed on Space Level devices at Group B Subgroup 5 ONLY"

Symbol	Parameter	Conditions	Notes	Min	Max	Unit	Sub-groups
V_{IO}	Input Offset Voltage			−1	1	mV	1
$+I_{IB}$	Input Bias Current			−0.1	0.1	nA	1
$-I_{IB}$	Input Bias Current			−0.1	0.1	nA	1

LF411–MLS 50k Radiation Electrical Characteristics
DC Parameters - Post Radiation Limits(1)

The following conditions apply, unless otherwise specified.
DC: V_{CC} = ±15V, V_{CM} = 0V, R_S = 0Ω Post Radiation Limits +25°C

Symbol	Parameter	Conditions	Notes	Min	Max	Unit	Sub-groups
I_{IO}	Input Offset Current			−0.25	0.25	nA	1
I_{IB+}	Input Bias Current			−1.0	1.0	nA	1
I_{IB-}	Input Bias Current			−1.0	1.0	nA	1

(1) Pre and post irradiation limits are identical to those listed under AC and DC electrical characteristics except as listed in the Post Radiation Limits Table. These parts may be dose rate sensitive in a space environment and demonstrate enhanced low dose rate effect. Radiation end point limits for the noted parameters are ensured only for the conditions as specified in MIL-STD-883, Method 1019

LF411MWGRLQMLV 100k Radiation Electrical Characteristics — ELDRS Free Only SMD# 5962R1122201
DC Parameters - Post Radiation Limits(1)

The following conditions apply, unless otherwise specified.
DC: V_{CC} = ±15V, V_{CM} = 0V, R_S = 0Ω Post Radiation Limits +25°C

Symbol	Parameter	Conditions	Notes	Min	Max	Unit	Sub-groups
I_{IO}	Input Offset Current			−1.0	1.0	nA	1
I_{IB+}	Input Bias Current			−0.20	6.0	nA	1
I_{IB-}	Input Bias Current			−0.20	6.0	nA	1

(1) Pre and post irradiation limits are identical to those listed under AC and DC electrical characteristics except as listed in the Post Radiation Limits Table. These parts may be sensitive in a high dose rate environment. Low dose rate testing has been performed on a wafer-by-wafer basis, per Test Method 1019, Condition D of MIL-STD-883, with no enhanced low dose rate sensitivity (ELDRS).

Typical Connection

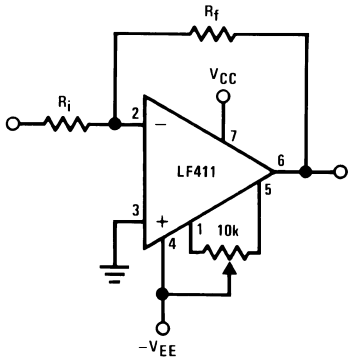

Typical Performance Characteristics

Input Bias Current

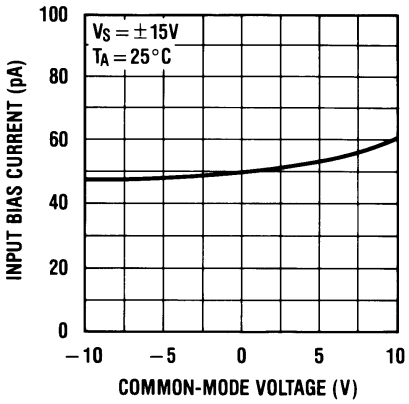

Figure 3.

Input Bias Current

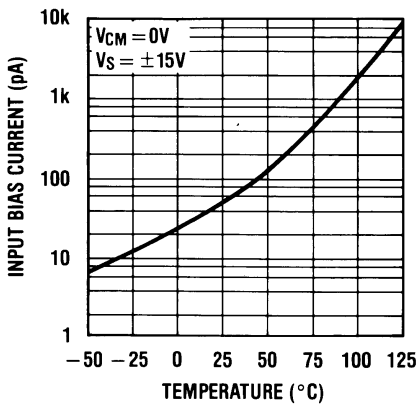

Figure 4.

Supply Current

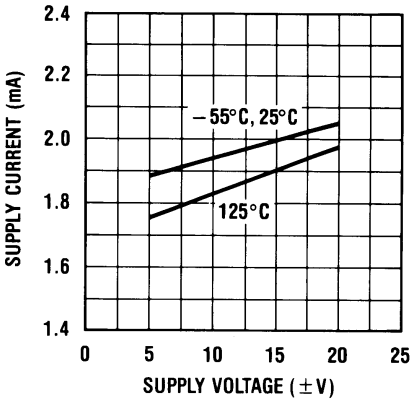

Figure 5.

Positive Common-Mode Input Voltage Limit

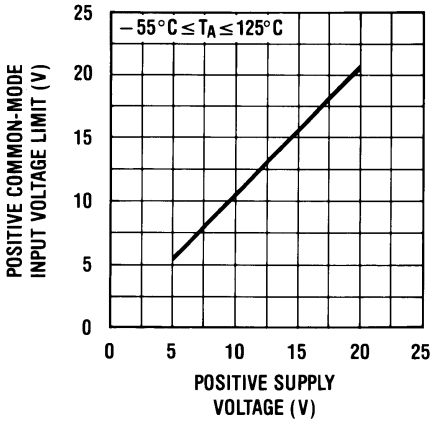

Figure 6.

Negative Common-Mode Input Voltage Limit

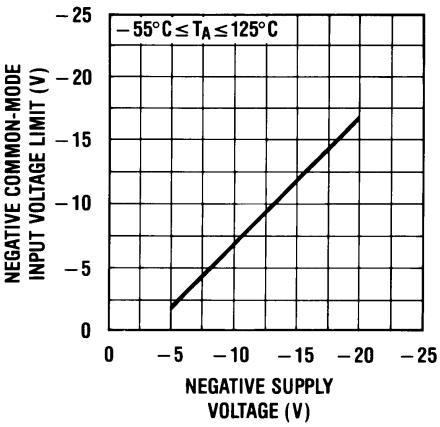

Figure 7.

Positive Current Limit

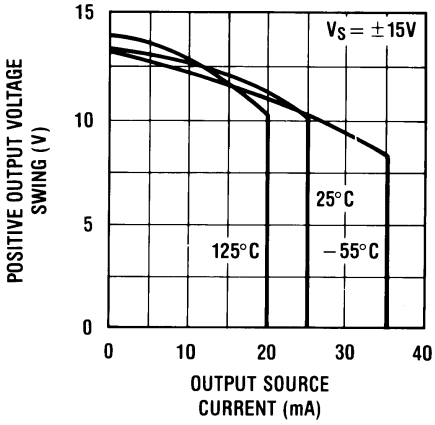

Figure 8.

Copyright © 2005–2013, Texas Instruments Incorporated

Typical Performance Characteristics (continued)

Negative Current Limit

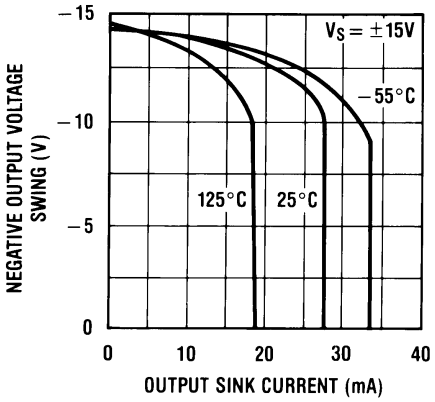

Figure 9.

Output Voltage Swing

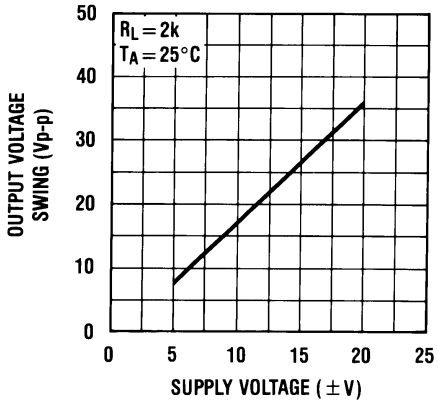

Figure 10.

Output Voltage Swing

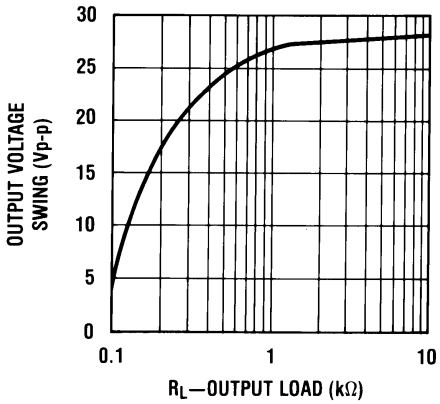

Figure 11.

Gain Bandwidth

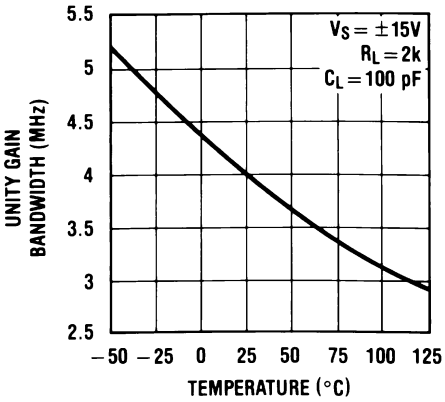

Figure 12.

Bode Plot

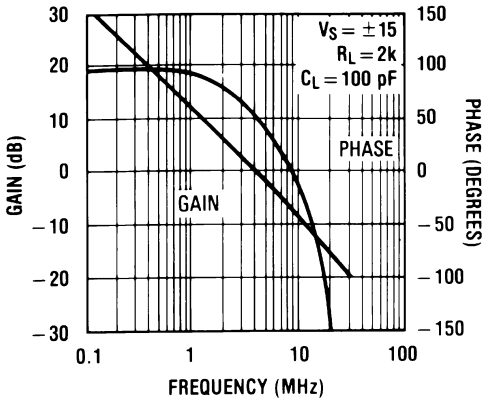

Figure 13.

Slew Rate

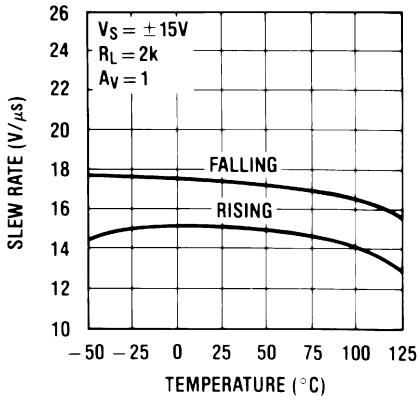

Figure 14.

Typical Performance Characteristics (continued)

Distortion vs Frequency

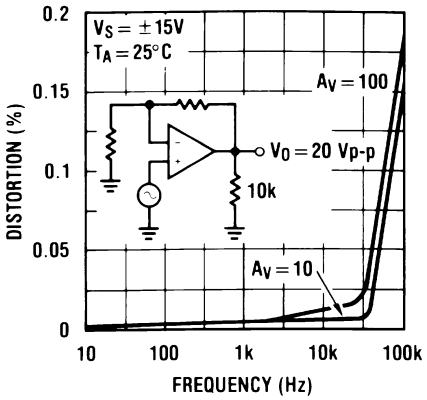

Figure 15.

Undistorted Output Voltage Swing

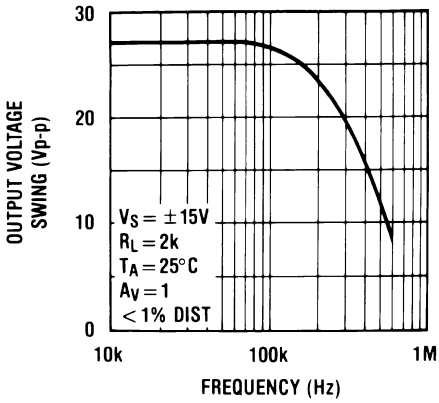

Figure 16.

Open Loop Frequency Response

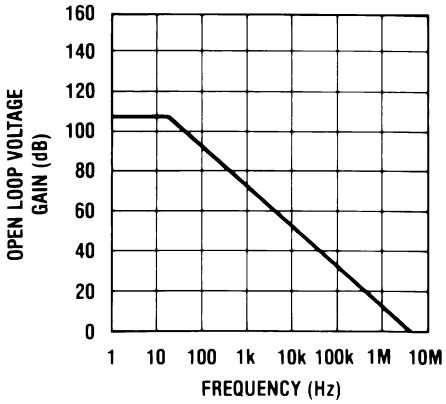

Figure 17.

Common-Mode Rejection Ratio

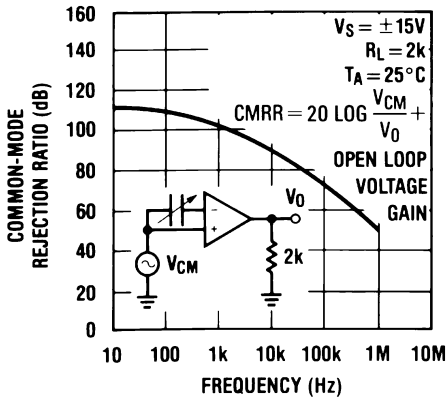

Figure 18.

Power Supply Rejection Ratio

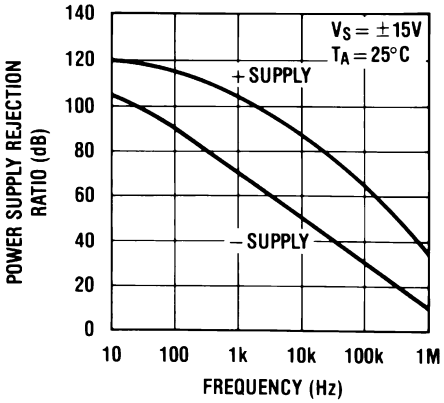

Figure 19.

Equivalent Input Noise Voltage

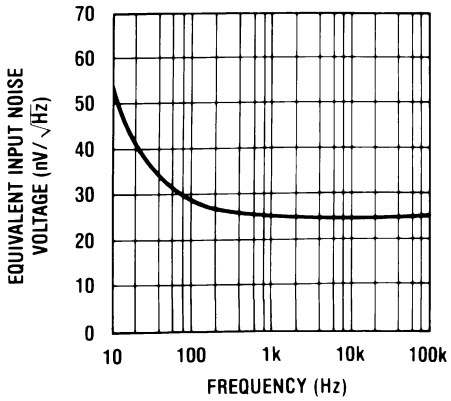

Figure 20.

Copyright © 2005–2013, Texas Instruments Incorporated

Typical Performance Characteristics (continued)

Open Loop Voltage Gain

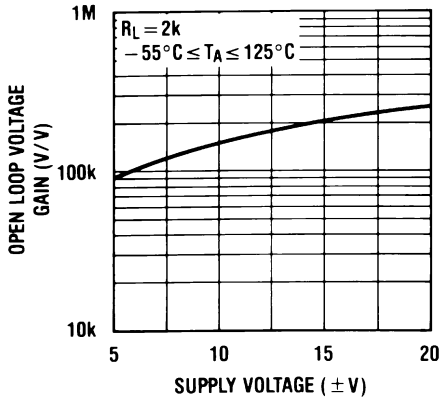

Figure 21.

Output Impedance

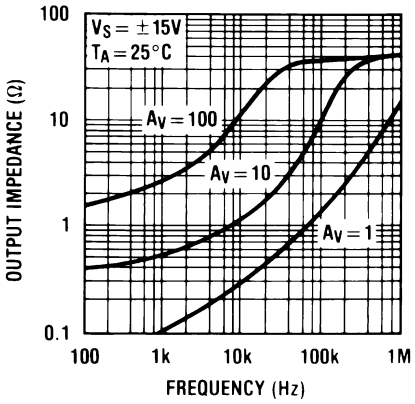

Figure 22.

Inverter Settling Time

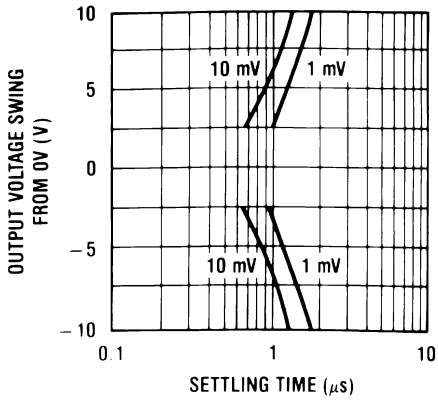

Figure 23.

Pulse Response

R_L=2 kΩ, C_L10 pF

Small Signal Inverting

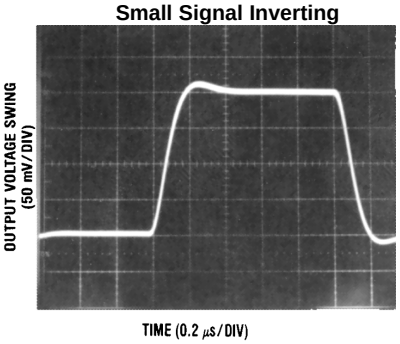

Small Signal Non-Inverting

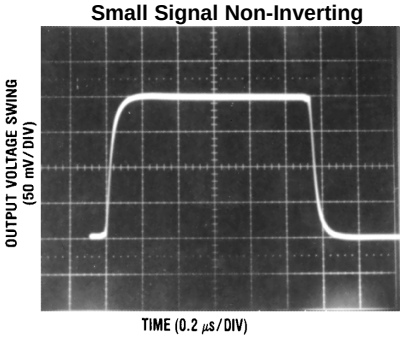

Large Signal Inverting

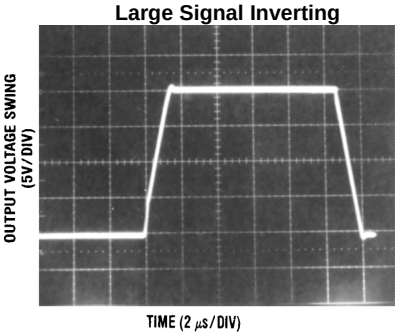

Large Signal Non-Inverting

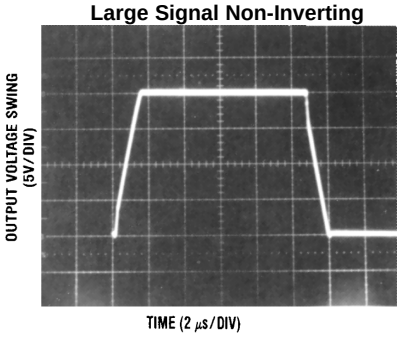

Current Limit (R_L=100Ω)

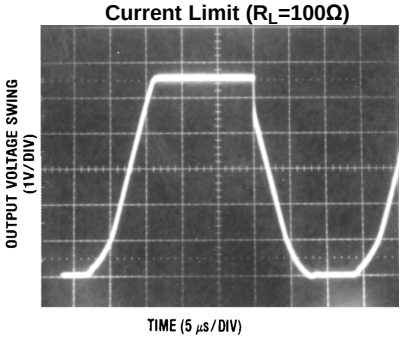

Copyright © 2005–2013, Texas Instruments Incorporated

APPLICATION HINTS

The LF411QML series of internally trimmed JFET input op amps (BI-FET II™) provide very low input offset voltage and ensured input offset voltage drift. These JFETs have large reverse breakdown voltages from gate to source and drain eliminating the need for clamps across the inputs. Therefore, large differential input voltages can easily be accommodated without a large increase in input current. The maximum differential input voltage is independent of the supply voltages. However, neither of the input voltages should be allowed to exceed the negative supply as this will cause large currents to flow which can result in a destroyed unit.

Exceeding the negative common-mode limit on either input will force the output to a high state, potentially causing a reversal of phase to the output. Exceeding the negative common-mode limit on both inputs will force the amplifier output to a high state. In neither case does a latch occur since raising the input back within the common-mode range again puts the input stage and thus the amplifier in a normal operating mode.

Exceeding the positive common-mode limit on a single input will not change the phase of the output; however, if both inputs exceed the limit, the output of the amplifier may be forced to a high state.

The amplifier will operate with a common-mode input voltage equal to the positive supply; however, the gain bandwidth and slew rate may be decreased in this condition. When the negative common-mode voltage swings to within 3V of the negative supply, an increase in input offset voltage may occur.

The LF411QML is biased by a zener reference which allows normal circuit operation on ±4.5V power supplies. Supply voltages less than these may result in lower gain bandwidth and slew rate.

The LF411QML will drive a 2 kΩ load resistance to ±10V over the full temperature range. If the amplifier is forced to drive heavier load currents, however, an increase in input offset voltage may occur on the negative voltage swing and finally reach an active current limit on both positive and negative swings.

Precautions should be taken to ensure that the power supply for the integrated circuit never becomes reversed in polarity or that the unit is not inadvertently installed backwards in a socket as an unlimited current surge through the resulting forward diode within the IC could cause fusing of the internal conductors and result in a destroyed unit.

As with most amplifiers, care should be taken with lead dress, component placement and supply decoupling in order to ensure stability. For example, resistors from the output to an input should be placed with the body close to the input to minimize “pick-up” and maximize the frequency of the feedback pole by minimizing the capacitance from the input to ground.

A feedback pole is created when the feedback around any amplifier is resistive. The parallel resistance and capacitance from the input of the device (usually the inverting input) to AC ground set the frequency of the pole. In many instances the frequency of this pole is much greater than the expected 3 dB frequency of the closed loop gain and consequently there is negligible effect on stability margin. However, if the feedback pole is less than approximately 6 times the expected 3 dB frequency, a lead capacitor should be placed from the output to the input of the op amp. The value of the added capacitor should be such that the RC time constant of this capacitor and the resistance it parallels is greater than or equal to the original feedback pole time constant.

Copyright © 2005–2013, Texas Instruments Incorporated

Typical Applications

Figure 24. High Speed Current Booster

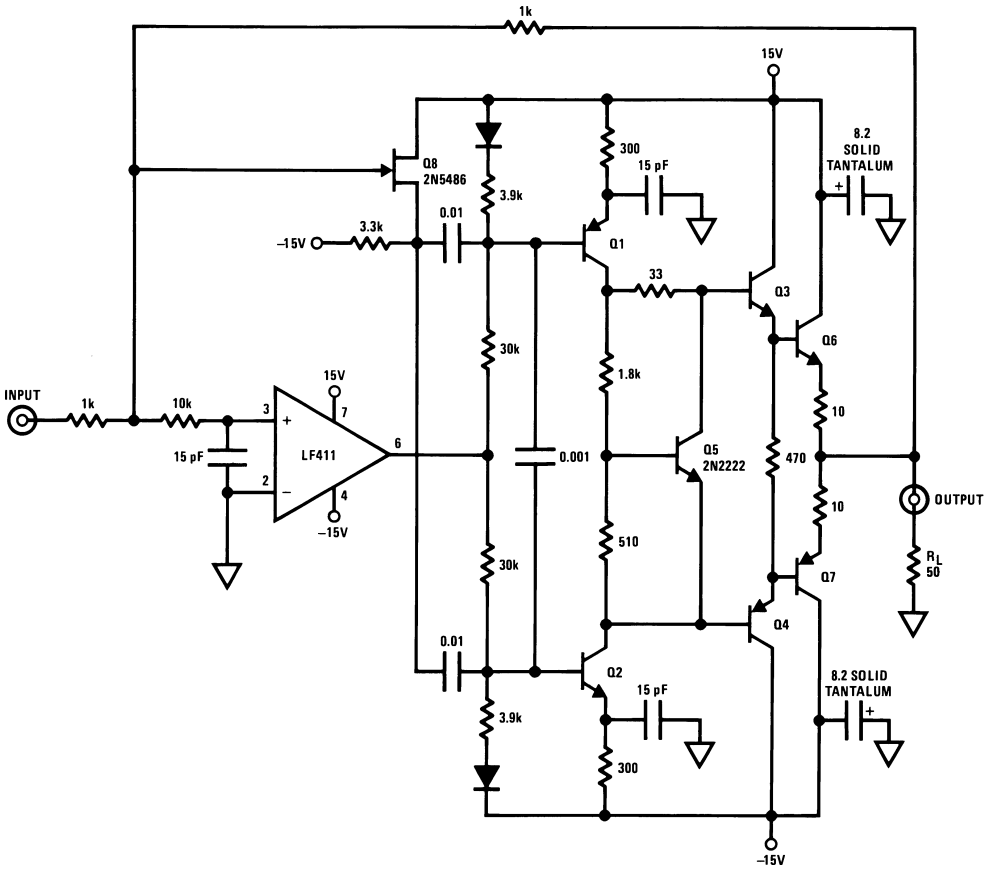

PNP=2N2905
NPN=2N2219 unless noted
TO-5 heat sinks for Q6-Q7

Figure 25. 10-Bit Linear DAC with No V_{OS} Adjust

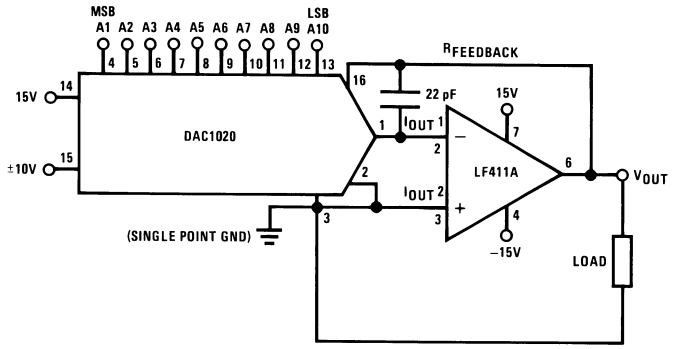

$$V_{OUT} = -V_{REF}\left(\frac{A1}{2} + \frac{A2}{4} + \frac{A3}{8} + \cdots \frac{A10}{1024}\right)$$

$$-10V \le V_{REF} \le 10V$$

$$0 \le V_{OUT} \le -\frac{1023}{1024}V_{REF}$$

where A_N=1 if the A_N digital input is high
A_N=0 if the A_N digital input is low

Copyright © 2005–2013, Texas Instruments Incorporated

Figure 26. Single Supply Analog Switch with Buffered Output

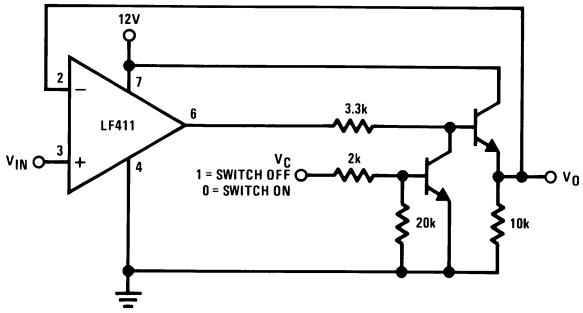

Table 2. Revision History

Date Released	Revision	Section	Originator	Changes
10/11/05	A	New Release to corporate format	L. Lytle	1 MDS data sheet was converted into the corporate data sheet format. MDS MNLF411M-X Rev 2A2 will be archived.
05/07/07	B	Features, Ordering Information Table, LF411-MLS Electricals	L. McGee	Added reference to Radiation and Radiation Electricals for LF411-MLS device. Revision A will be archived.
06/30/11	C	Features, Ordering Information Table, LF411-MLS 50k Post Radiation Electricals, LF411MWGRLQMLV Post Radiation Electricals	L. McGee & K.Kruckmeyer	Added LF411MWGRLQMLV to Ordering Info and modified Radiation Electricals to “Radiation” devices. Added 50k and 100k Post Radiation DC parameter tables. Revision B will be archived.
03/26/2013	C	All Sections		Changed layout of National Data Sheet to TI format

Copyright © 2005–2013, Texas Instruments Incorporated

PACKAGING INFORMATION

Orderable part number	Status (1)	Material type (2)	Package | Pins	Package qty | Carrier	RoHS (3)	Lead finish/ Ball material (4)	MSL rating/ Peak reflow (5)	Op temp (°C)	Part marking (6)
5962R1122201VZA	Active	Production	CFP (NAC) | 10	124 | JEDEC TRAY (5+1)	No	SNPB	Level-1-NA-UNLIM	-55 to 125	LF411MWG RLQMLV Q 5962R11222 01VZA ACO 01VZA >T
LF411MWGRLQMLV	Active	Production	CFP (NAC) | 10	124 | JEDEC TRAY (5+1)	No	SNPB	Level-1-NA-UNLIM	-55 to 125	LF411MWG RLQMLV Q 5962R11222 01VZA ACO 01VZA >T

(1) **Status:** For more details on status, see our product life cycle.

(2) **Material type:** When designated, preproduction parts are prototypes/experimental devices, and are not yet approved or released for full production. Testing and final process, including without limitation quality assurance, reliability performance testing, and/or process qualification, may not yet be complete, and this item is subject to further changes or possible discontinuation. If available for ordering, purchases will be subject to an additional waiver at checkout, and are intended for early internal evaluation purposes only. These items are sold without warranties of any kind.

(3) **RoHS values:** Yes, No, RoHS Exempt. See the TI RoHS Statement for additional information and value definition.

(4) **Lead finish/Ball material:** Parts may have multiple material finish options. Finish options are separated by a vertical ruled line. Lead finish/Ball material values may wrap to two lines if the finish value exceeds the maximum column width.

(5) **MSL rating/Peak reflow:** The moisture sensitivity level ratings and peak solder (reflow) temperatures. In the event that a part has multiple moisture sensitivity ratings, only the lowest level per JEDEC standards is shown. Refer to the shipping label for the actual reflow temperature that will be used to mount the part to the printed circuit board.

(6) **Part marking:** There may be an additional marking, which relates to the logo, the lot trace code information, or the environmental category of the part.

Multiple part markings will be inside parentheses. Only one part marking contained in parentheses and separated by a "~" will appear on a part. If a line is indented then it is a continuation of the previous line and the two combined represent the entire part marking for that device.

Important Information and Disclaimer: The information provided on this page represents TI's knowledge and belief as of the date that it is provided. TI bases its knowledge and belief on information provided by third parties, and makes no representation or warranty as to the accuracy of such information. Efforts are underway to better integrate information from third parties. TI has taken and continues to take reasonable steps to provide representative and accurate information but may not have conducted destructive testing or chemical analysis on incoming materials and chemicals. TI and TI suppliers consider certain information to be proprietary, and thus CAS numbers and other limited information may not be available for release.

In no event shall TI's liability arising out of such information exceed the total purchase price of the TI part(s) at issue in this document sold by TI to Customer on an annual basis.

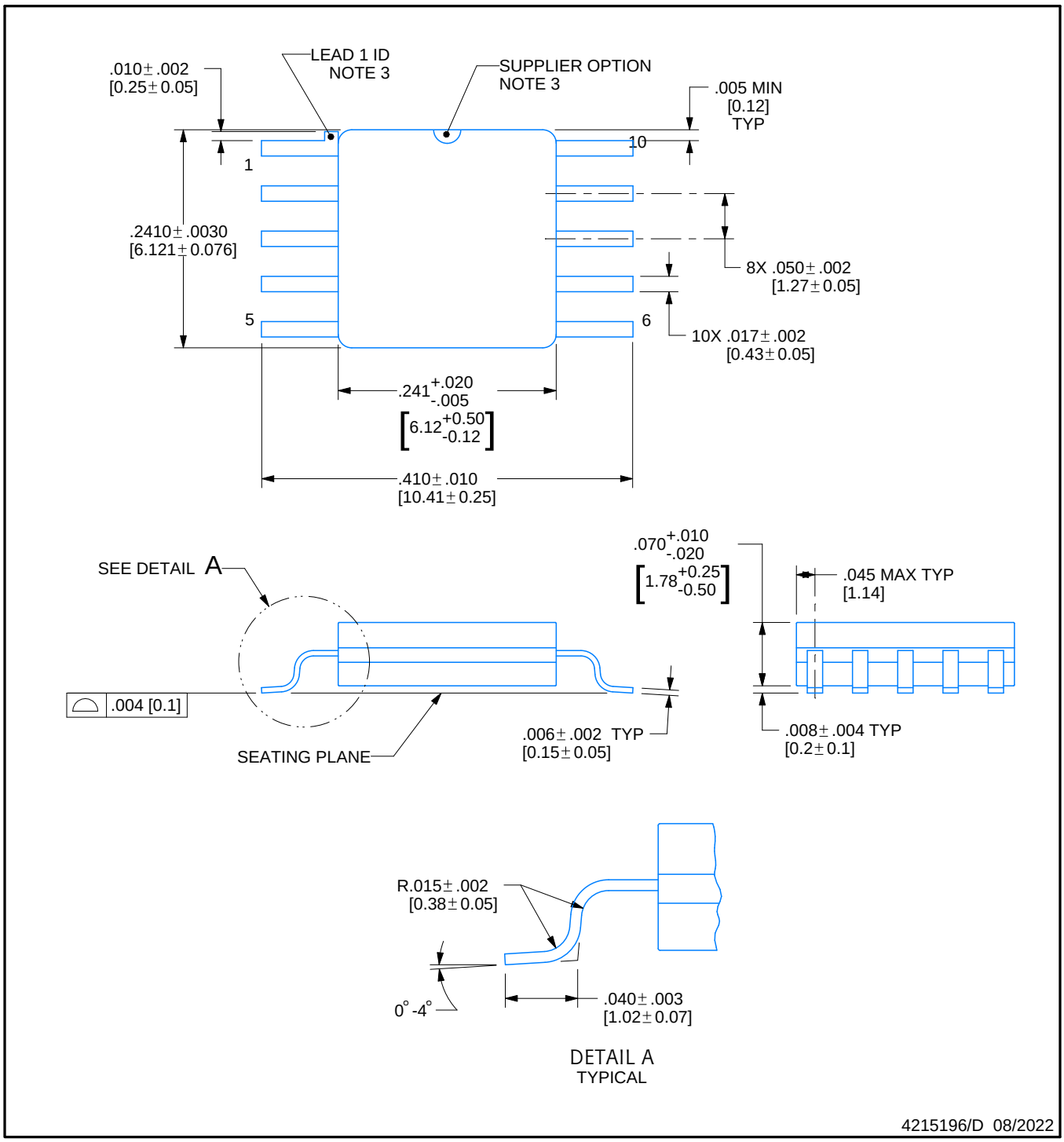

NOTES:

1. All controlling linear dimensions are in inches. Dimensions in brackets are in millimeters. Any dimension in brackets or parenthesis are for reference only. Dimensioning and tolerancing per ASME Y14.5M.
2. For solder thickness and composition, see the "Lead Finish Composition/Thickness" link in the packaging section of the Texas Instruments website
3. Lead 1 identification shall be:
   a) A notch or other mark within this area
   b) A tab on lead 1, either side
4. No JEDEC registration as of December 2021

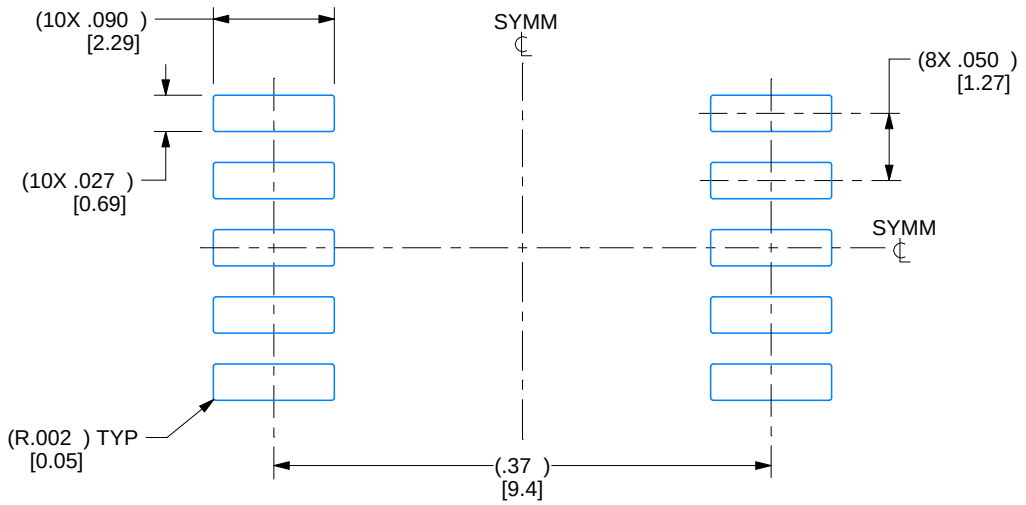

LAND PATTERN EXAMPLE
EXPOSED METAL SHOWN
SCALE: 7X

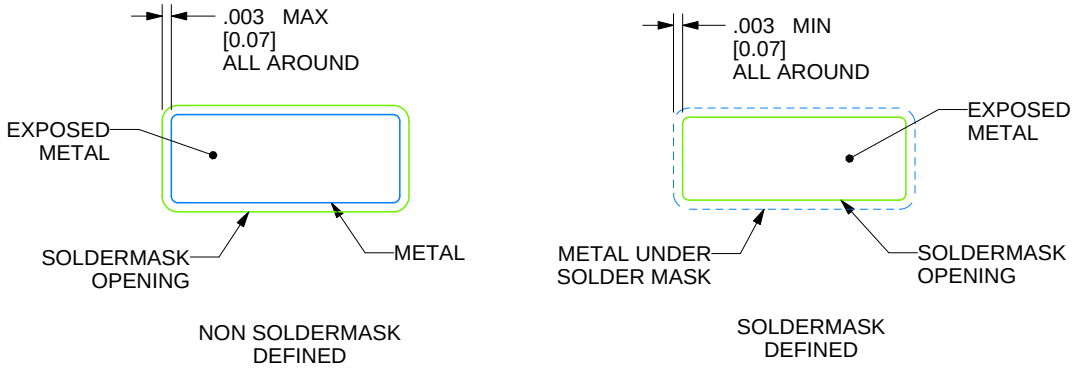

4215196/D 08/2022

REVISIONS

REV	DESCRIPTION	E.C.N.	DATE	BY/APP'D
A	RELEASE TO DOCUMENT CONTROL	2197877	12/30/2021	DAVID CHIN / ANIS FAUZI
B	NO CHANGE TO DRAWING; REVISION FOR YODA RELEASE;	2198820	02/14/2022	K. SINCERBOX
C	CHANGE PIN 1 ID LOCATION ON PIN	2198845	02/18/2022	D. CHIN / K. SINCERBOX
D	.2410± .0030 WAS .2700 +.0012/-.0002;	2200915	08/08/2022	D. CHIN / K. SINCERBOX

IMPORTANT NOTICE AND DISCLAIMER

TI PROVIDES TECHNICAL AND RELIABILITY DATA (INCLUDING DATASHEETS), DESIGN RESOURCES (INCLUDING REFERENCE DESIGNS), APPLICATION OR OTHER DESIGN ADVICE, WEB TOOLS, SAFETY INFORMATION, AND OTHER RESOURCES “AS IS” AND WITH ALL FAULTS, AND DISCLAIMS ALL WARRANTIES, EXPRESS AND IMPLIED, INCLUDING WITHOUT LIMITATION ANY IMPLIED WARRANTIES OF MERCHANTABILITY, FITNESS FOR A PARTICULAR PURPOSE OR NON-INFRINGEMENT OF THIRD PARTY INTELLECTUAL PROPERTY RIGHTS.

These resources are intended for skilled developers designing with TI products. You are solely responsible for (1) selecting the appropriate TI products for your application, (2) designing, validating and testing your application, and (3) ensuring your application meets applicable standards, and any other safety, security, regulatory or other requirements.

These resources are subject to change without notice. TI grants you permission to use these resources only for development of an application that uses the TI products described in the resource. Other reproduction and display of these resources is prohibited. No license is granted to any other TI intellectual property right or to any third party intellectual property right. TI disclaims responsibility for, and you fully indemnify TI and its representatives against any claims, damages, costs, losses, and liabilities arising out of your use of these resources.

TI’s products are provided subject to TI’s Terms of Sale, TI’s General Quality Guidelines, or other applicable terms available either on ti.com or provided in conjunction with such TI products. TI’s provision of these resources does not expand or otherwise alter TI’s applicable warranties or warranty disclaimers for TI products. Unless TI explicitly designates a product as custom or customer-specified, TI products are standard, catalog, general purpose devices.

TI objects to and rejects any additional or different terms you may propose.

Copyright © 2026, Texas Instruments Incorporated

Last updated 10/2025