ISO672x EMC 性能优异的通用基础型双通道数字隔离器

1 特性

- 提供功能安全
  - 可提供用于功能安全系统设计的文档：ISO6720、ISO6721
- 50Mbps 数据速率
- 稳健可靠的隔离栅：
  - 在 450V_{RMS} 工作电压下具有长工作寿命
  - 隔离等级高达 3000V_{RMS}
  - CMTI 典型值为 ±150kV/μs
- 宽电源电压范围：1.71V 到 1.89V 和 2.25V 到 5.5V
- 1.71V 至 5.5V 电平转换
- 默认输出*高电平* (ISO672xB) 和*低电平* (ISO672xFB) 选项
- 宽温度范围：–40°C 至 125°C
- 1Mbps 时的每通道电流典型值为 1.8mA
- 低传播延迟：11ns（典型值）
- 优异的电磁兼容性 (EMC)
  - 系统级 ESD、EFT 和浪涌抗扰性
  - 在整个隔离栅具有 ±8kV IEC 61000-4-2 接触放电保护
  - 低干扰 (EMI)
- 窄 SOIC (D-8) 封装
- 安全相关认证：
  - DIN EN IEC 60747-17 (VDE 0884-17)
  - UL 1577 组件认证计划
  - IEC 62368-1、IEC 61010-1、IEC 60601-1
  - GB 4943.1

2 应用

- 电源
- 电网、电表
- 电机驱动器
- 工厂自动化
- 楼宇自动化
- 照明
- 电器

3 说明

ISO672xB 器件是高性能双通道数字隔离器，可提供符合 UL 1577 的 3000V_{RMS}（D 封装）隔离额定值，非常适合具有此类需求的成本敏感型应用。这些器件还通过了 VDE、TUV、CSA 和 CQC 认证。

在隔离 CMOS 或 LVCMOS 数字 I/O 的同时，ISO672xB 器件可提供高电磁抗扰度和低辐射，同时具备低功耗特性。每条隔离通道的逻辑输入和输出缓冲器均由 TI 的双电容二氧化硅 (SiO_2) 绝缘栅相隔离。ISO6720B 器件具有 2 条同向隔离通道。ISO6721B 器件具有 2 条反向隔离通道。如果输入功率或信号出现损失，不带后缀 F 的器件默认输出*高电平*，带后缀 F 的器件默认输出*低电平*。更多详细信息，请参见器件功能模式部分。

这些器件与隔离式电源结合使用，有助于防止 UART、SPI、RS-485、RS-232 和 CAN 等数据总线损坏敏感电路。凭借创新型芯片设计和布线技术，ISO672xB 器件的电磁兼容性得到了显著增强，可缓解系统级 ESD、EFT 和浪涌问题并符合辐射标准。ISO672xB 系列器件可提供 8 引脚 SOIC 窄体 (D) 封装，是对前几代器件的引脚到引脚式升级。对于增强型隔离要求，请参考 ISO672x-Q1。

器件信息

器件型号(1)	封装	封装尺寸（标称值）
ISO6720B、ISO6720FB	D (8)	4.90mm x 3.91mm
ISO6721B、ISO6721FB		
ISO6721RB、ISO6721RFB		

(1) 如需了解所有可用封装，请参阅数据表末尾的可订购产品附录。

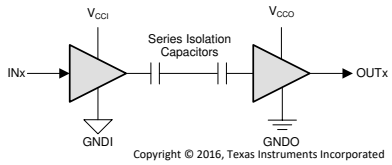

V_{CCI} = 输入电源，V_{CCO} = 输出电源
GNDI = 输入接地，GNDO = 输出接地

简化版原理图

本文档旨在为方便起见，提供有关 TI 产品中文版本的信息，以确认产品的概要。有关适用的官方英文版本的最新信息，请访问 www.ti.com，其内容始终优先。TI 不保证翻译的准确性和有效性。在实际设计之前，请务必参考最新版本的英文版本。

Table of Contents

1 特性 ... 1
2 应用 ... 1
3 说明 ... 1
4 Revision History ... 2
5 Pin Configuration and Functions ... 4
6 Specifications ... 5
6.1 Absolute Maximum Ratings ... 5
6.2 ESD Ratings ... 5
6.3 Recommended Operating Conditions ... 6
6.4 Thermal Information ... 7
6.5 Power Ratings ... 7
6.6 Insulation Specifications ... 8
6.7 Safety-Related Certifications ... 10
6.8 Safety Limiting Values ... 10
6.9 Electrical Characteristics—5-V Supply ... 12
6.10 Supply Current Characteristics—5-V Supply ... 12
6.11 Electrical Characteristics—3.3-V Supply ... 14
6.12 Supply Current Characteristics—3.3-V Supply ... 14
6.13 Electrical Characteristics—2.5-V Supply ... 16
6.14 Supply Current Characteristics—2.5-V Supply ... 16
6.15 Electrical Characteristics—1.8-V Supply ... 18
6.16 Supply Current Characteristics—1.8-V Supply ... 18
6.17 Switching Characteristics—5-V Supply ... 20
6.18 Switching Characteristics—3.3-V Supply ... 20
6.19 Switching Characteristics—2.5-V Supply ... 21
6.20 Switching Characteristics—1.8-V Supply ... 21
6.21 Insulation Characteristics Curves ... 22
6.22 Typical Characteristics ... 23
7 Parameter Measurement Information ... 25
8 Detailed Description ... 26
8.1 Overview ... 26
8.2 Functional Block Diagram ... 26
8.3 Feature Description ... 27
8.4 Device Functional Modes ... 28
9 Application and Implementation ... 29
9.1 Application Information ... 29
9.2 Typical Application ... 30
9.3 *Insulation Lifetime* ... 32
10 Power Supply Recommendations ... 34
11 Layout ... 35
11.1 Layout Guidelines ... 35
11.2 Layout Example ... 36
12 Device and Documentation Support ... 37
12.1 Device Support ... 37
12.2 Documentation Support ... 37
12.3 Receiving Notification of Documentation Updates ... 37
12.4 支持资源 ... 37
12.5 Trademarks ... 37
12.6 静电放电警告 ... 37
12.7 术语表 ... 37
13 Mechanical, Packaging, and Orderable Information ... 37

4 Revision History

注：以前版本的页码可能与当前版本的页码不同

Changes from Revision E (May 2022) to Revision F (February 2023) — **Page**

- 将整个文档中的标准名称从“DIN V VDE V 0884-11:2017-01”更改为“DIN EN IEC 60747-17 (VDE 0884-17)” ... 1
- 通篇删除了对标准 IEC/EN/CSA 60950-1 的引用 ... 1
- 通篇更新了标记为“计划”的标准，以包含证书编号 ... 1
- 通篇删除了所有标准名称中的标准版本和年份参考 ... 1
- Added Maximum impulse voltage (V_{IMP}) specification per DIN EN IEC 60747-17 (VDE 0884-17) ... 8
- Changed test conditions and values of Maximum surge isolation voltage (V_{IOSM}) specification per DIN EN IEC 60747-17 (VDE 0884-17) ... 8
- Clarified method b test conditions of Apparent charge (q_{PD}) ... 8
- Changed Maximum surge isolation voltage (V_{IOSM}) from 5000 V_{PK} to 6500 V_{PK} ... 10
- Changed working voltage lifetime margin from 30% to 20% and minimum required insulation lifetime from 26 years to 24 years ... 32
- Changed 图 9-8 per DIN EN IEC 60747-17 (VDE 0884-17) ... 32

Changes from Revision D (September 2021) to Revision E (May 2022) — **Page**

- Updated CMTI typical to 150 kV/us and minimum to 100 kV/us ... 5
- Switched the labels for V_{CC1} falling and V_{CC2} rising in the graph legend of *Power Supply Undervoltage Threshold vs Free-Air Temperature* ... 23

Copyright © 2023 Texas Instruments Incorporated

Changes from Revision C (May 2021) to Revision D (September 2021) **Page**

- 在数据表添加了 ISO6721RB 器件。 1

Changes from Revision B (March 2021) to Revision C (May 2021) **Page**

- Updated CISPR 22 to CISPR 32 27
- Updated *Insulation Lifetime Projection Data* image 32
- Updated *Power Supply Recommendations* document references 34
- Added the *Device Support* section 37

Changes from Revision A (December 2020) to Revision B (March 2021) **Page**

- Switched the line colors for V_{CC} at 2.5 V and V_{CC} at 3.3 V in 23
- Switched the labels for V_{CC1} falling and V_{CC2} rising in the graph legend of *Power Supply Undervoltage Threshold vs Free-Air Temperature* 23

Changes from Revision * (July 2020) to Revision A (December 2020) **Page**

- 将器件状态更改为“量产数据” 1

5 Pin Configuration and Functions

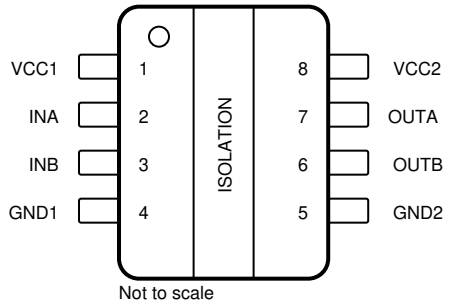

图 5-1. ISO6720B D Package 8-Pin SOIC Top View

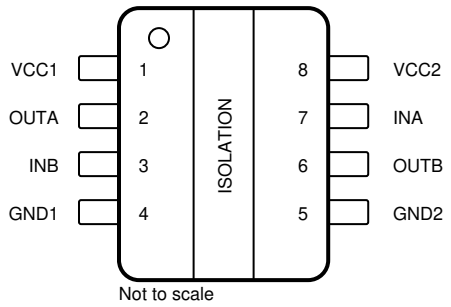

图 5-2. ISO6721B D Package 8-Pin SOIC Top View

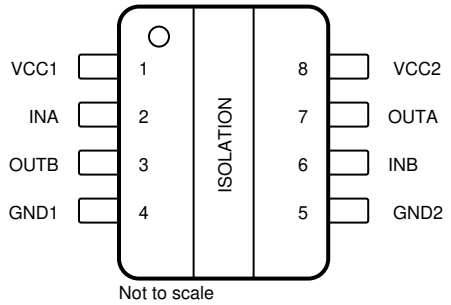

图 5-3. ISO6721RB D Package 8-Pin SOIC Top View

表 5-1. Pin Functions

PIN				I/O	DESCRIPTION
NAME	D PACKAGE				
	ISO6720B	ISO6721B	ISO6721RB		
GND1	4	4	4	—	Ground connection for V_{CC1}
GND2	5	5	5	—	Ground connection for V_{CC2}
INA	2	7	2	I	Input, channel A
INB	3	3	6	I	Input, channel B
OUTA	7	2	7	O	Output, channel A
OUTB	6	6	3	O	Output, channel B
V_{CC1}	1	1	1	—	Power supply, V_{CC1}
V_{CC2}	8	8	8	—	Power supply, V_{CC2}

Copyright © 2023 Texas Instruments Incorporated

6 Specifications

6.1 Absolute Maximum Ratings

See[1]

		MIN	MAX	UNIT
Supply Voltage [2]	V_{CC1} to GND1	-0.5	6	V
	V_{CC2} to GND2	-0.5	6	
Input/Output Voltage	INx to GNDx	-0.5	V_{CCX} + 0.5 [3]	V
	OUTx to GNDx	-0.5	V_{CCX} + 0.5 [3]	
Output Current	Io	-15	15	mA
Temperature	Operating junction temperature, T_J		150	°C
	Storage temperature, T_{stg}	-65	150	°C

(1) Stresses beyond those listed under Absolute Maximum Ratings may cause permanent damage to the device. These are stress ratings only, which do not imply functional operation of the device at these or any other conditions beyond those indicated under Recommended Operating Conditions. Exposure to absolute-maximum-rated conditions for extended periods may affect device reliability.
(2) All voltage values except differential I/O bus voltages are with respect to the local ground terminal (GND1 or GND2) and are peak voltage values
(3) Maximum voltage must not exceed 6 V.

6.2 ESD Ratings

			VALUE	UNIT
$V_{(ESD)}$	Electrostatic discharge	Human body model (HBM), per ANSI/ESDA/JEDEC JS-001, all pins[1]	±6000	V
		Charged device model (CDM), per JEDEC specification JESD22-C101, all pins[2]	±1500	
		Contact discharge per IEC 61000-4-2; Isolation barrier withstand test[3] [4]	±8000	

(1) JEDEC document JEP155 states that 500-V HBM allows safe manufacturing with a standard ESD control process.
(2) JEDEC document JEP157 states that 250-V CDM allows safe manufacturing with a standard ESD control process.
(3) IEC ESD strike is applied across the barrier with all pins on each side tied together creating a two-terminal device.
(4) Testing is carried out in air or oil to determine the intrinsic contact discharge capability of the device.

Copyright © 2023 Texas Instruments Incorporated

6.3 Recommended Operating Conditions

			MIN	NOM	MAX	UNIT
V_{CC1} (1)	Supply Voltage Side 1	V_{CC} = 1.8 V (3)	1.71		1.89	V
V_{CC1} (1)	Supply Voltage Side 1	V_{CC} = 2.5 V to 5 V (3)	2.25		5.5	V
V_{CC2} (1)	Supply Voltage Side 2	V_{CC} = 1.8 V (3)	1.71		1.89	V
V_{CC2} (1)	Supply Voltage Side 2	V_{CC} = 2.5 V to 5 V (3)	2.25		5.5	V
V_{CC} (UVLO+)	UVLO threshold when supply voltage is rising			1.53	1.71	V
V_{CC} (UVLO-)	UVLO threshold when supply voltage is falling		1.1	1.41		V
Vhys (UVLO)	Supply voltage UVLO hysteresis		0.08	0.13		V
V_{IH}	High level Input voltage		0.7 x V_{CCI} (2)		V_{CCI}	V
V_{IL}	Low level Input voltage		0		0.3 x V_{CCI}	V
I_{OH}	High level output current	V_{CCO} (2) = 5 V	-4			mA
		V_{CCO} = 3.3 V	-2			mA
		V_{CCO} = 2.5 V	-1			mA
		V_{CCO} = 1.8 V	-1			mA
I_{OL}	Low level output current	V_{CCO} = 5 V			4	mA
		V_{CCO} = 3.3 V			2	mA
		V_{CCO} = 2.5 V			1	mA
		V_{CCO} = 1.8 V			1	mA
DR	Data Rate		0		50	Mbps
T_A	Ambient temperature		-40	25	125	°C

(1) V_{CC1} and V_{CC2} can be set independent of one another
(2) V_{CCI} = Input-side V_{CC}; V_{CCO} = Output-side V_{CC}
(3) The channel outputs are in undetermined state when 1.89 V < V_{CC1}, V_{CC2} < 2.25 V and 1.05 V < V_{CC1}, V_{CC2} < 1.71 V

Copyright © 2023 Texas Instruments Incorporated

6.4 Thermal Information

THERMAL METRIC [1]		ISO672xB D (SOIC) 8 PINS	ISO6721RB D (SOIC) 8 PINS	UNIT
$R_{\theta JA}$	Junction-to-ambient thermal resistance	104.6	98.5	°C/W
$R_{\theta JC(top)}$	Junction-to-case (top) thermal resistance	48.9	33.8	°C/W
$R_{\theta JB}$	Junction-to-board thermal resistance	52.9	47	°C/W
ψ_{JT}	Junction-to-top characterization parameter	7.9	2.3	°C/W
ψ_{JB}	Junction-to-board characterization parameter	52.1	46.2	°C/W
$R_{\theta JC(bot)}$	Junction-to-case (bottom) thermal resistance	n/a	n/a	°C/W

(1) For more information about traditional and new thermal metrics, see the *Semiconductor and IC Package Thermal Metrics* application report.

6.5 Power Ratings

PARAMETER		TEST CONDITIONS	MIN	TYP	MAX	UNIT
ISO6720B						
P_D	Maximum power dissipation (both sides)	$V_{CC1} = V_{CC2} = 5.5$ V, $T_J = 150°C$, $C_L = 15$ pF, Input a 25-MHz 50% duty cycle square wave			72	mW
P_{D1}	Maximum power dissipation (side-1)				20	mW
P_{D2}	Maximum power dissipation (side-2)				52	mW
ISO6721B						
P_D	Maximum power dissipation (both sides)	$V_{CC1} = V_{CC2} = 5.5$ V, $T_J = 150°C$, $C_L = 15$ pF, Input a 25-MHz 50% duty cycle square wave			73	mW
P_{D1}	Maximum power dissipation (side-1)				37	mW
P_{D2}	Maximum power dissipation (side-2)				37	mW
ISO6721RB						
P_D	Maximum power dissipation (both sides)	$V_{CC1} = V_{CC2} = 5.5$ V, $T_J = 150°C$, $C_L = 15$ pF, Input a 25-MHz 50% duty cycle square wave			86	mW
P_{D1}	Maximum power dissipation (side-1)				43	mW
P_{D2}	Maximum power dissipation (side-2)				43	mW

Copyright © 2023 Texas Instruments Incorporated

6.6 Insulation Specifications

PARAMETER		TEST CONDITIONS	VALUE	UNIT
			8-D	
IEC 60664-1				
CLR	External clearance[1]	Side 1 to side 2 distance through air	>4	mm
CPG	External creepage[1]	Side 1 to side 2 distance across package surface	>4	mm
DTI	Distance through the insulation	Minimum internal gap (internal clearance)	>17	µm
CTI	Comparative tracking index	IEC 60112; UL 746A	>400	V
	Material Group	According to IEC 60664-1	II	
	Overvoltage category	Rated mains voltage ⩽ 150 V_{RMS}	I-IV	
		Rated mains voltage ⩽ 300 V_{RMS}	I-III	
DIN EN IEC 60747-17 (VDE 0884-17)[2]				
V_{IORM}	Maximum repetitive peak isolation voltage	AC voltage (bipolar)	637	V_{PK}
V_{IOWM}	Maximum isolation working voltage	AC voltage (sine wave); time-dependent dielectric breakdown (TDDB) test. See 图 9-8	450	V_{RMS}
		DC voltage	637	V_{DC}
V_{IOTM}	Maximum transient isolation voltage	$V_{TEST} = V_{IOTM}$, t = 60 s (qualification); $V_{TEST} = 1.2 \times V_{IOTM}$, t = 1 s (100% production)	4242	V_{PK}
V_{IMP}	Maximum impulse voltage[3]	Tested in air, 1.2/50-us waveform per IEC 62368-1	5000	V_{PK}
V_{IOSM}	Maximum surge isolation voltage[4]	V_{IOSM} ⩾ 1.3 x V_{IMP}; Tested in oil (qualification test), 1.2/50- µ s waveform per IEC 62368-1	6500	V_{PK}
q_{pd}	Apparent charge[5]	Method a: After I/O safety test subgroup 2/3, $V_{ini} = V_{IOTM}$, t_{ini} = 60 s; $V_{pd(m)} = 1.2 \times V_{IORM}$, t_m = 10 s	⩽ 5	pC
		Method a: After environmental tests subgroup 1, $V_{ini} = V_{IOTM}$, t_{ini} = 60 s; $V_{pd(m)} = 1.3 \times V_{IORM}$, t_m = 10 s	⩽ 5	
		Method b: At routine test (100% production) and preconditioning (type test); $V_{ini} = 1.2 \times V_{IOTM}$, t_{ini} = 1 s; $V_{pd(m)} = 1.5 \times V_{IORM}$, t_m = 1 s (method b1) or $V_{pd(m)} = V_{ini}$, $t_m = t_{ini}$ (method b2)	⩽ 5	
C_{IO}	Barrier capacitance, input to output[6]	$V_{IO} = 0.4 \times \sin(2 \pi ft)$, f = 1 MHz	~0.5	pF
R_{IO}	Insulation resistance, input to output[6]	V_{IO} = 500 V, T_A = 25°C	> 10^{12}	Ω
		V_{IO} = 500 V, 100°C ⩽ T_A ⩽ 125°C	> 10^{11}	
		V_{IO} = 500 V at T_S = 150°C	> 10^{9}	
	Pollution degree		2	
	Climatic category		40/125/21	
UL 1577				
V_{ISO}	Withstand isolation voltage	$V_{TEST} = V_{ISO}$, t = 60 s (qualification); $V_{TEST} = 1.2 \times V_{ISO}$, t = 1 s (100% production)	3000	V_{RMS}

(1) Creepage and clearance requirements should be applied according to the specific equipment isolation standards of an application. Care should be taken to maintain the creepage and clearance distance of a board design to ensure that the mounting pads of the isolator on the printed-circuit board do not reduce this distance. Creepage and clearance on a printed-circuit board become equal in certain cases. Techniques such as inserting grooves, ribs, or both on a printed circuit board are used to help increase these specifications.
(2) ISO672x is suitable for *basic electrical insulation* only within the safety ratings. Compliance with the safety ratings shall be ensured by means of suitable protective circuits.
(3) Testing is carried out in air to determine the surge immunity of the package.
(4) Testing is carried out in oil to determine the intrinsic surge immunity of the isolation barrier.

Copyright © 2023 Texas Instruments Incorporated

(5) Apparent charge is electrical discharge caused by a partial discharge (pd).
(6) All pins on each side of the barrier tied together creating a two-pin device.

6.7 Safety-Related Certifications

VDE	CSA	UL	CQC	TUV
Certified according to DIN EN IEC 60747-17 (VDE 0884-17)	Certified according to IEC 62368-1, IEC 61010-1 and IEC 60601	Certified according to UL 1577 Component Recognition Program	Certified according to GB 4943.1	Certified according to EN 61010-1 and EN 62368-1
Maximum transient isolation voltage, 4242 V_{PK}; Maximum repetitive peak isolation voltage, 637 V_{PK}; Maximum surge isolation voltage, 6500 V_{PK}	400 V_{RMS} basic insulation per CSA 62368-1 and IEC 62368-1; 300 V_{RMS} basic insulation per CSA 61010-1 and IEC 61010-1 (pollution degree 2, material group III) 1 MOPP (Means of Patient Protection) per CSA 60601-1 and IEC 60601-1, 250 V_{RMS} (D-8) max working voltage	Single protection, 3000 V_{RMS}	Basic insulation, Altitude ≤ 5000 m, Tropical Climate, 250 V_{RMS} maximum working voltage	3000 V_{RMS} (D-8) Basic insulation per EN 61010-1 up to working voltage of 300 V_{RMS} (D-8) 3000 V_{RMS} (D-8) basic insulation per EN 62368-1 up to working voltage of 400 V_{RMS} (D-8)
Certificate number: 40047657	Master contract number: 220991	File number: E181974	Certificate number: CQC21001305151	Client ID number: 077311

6.8 Safety Limiting Values

Safety limiting[(1)] intends to minimize potential damage to the isolation barrier upon failure of input or output circuitry.

PARAMETER		TEST CONDITIONS	MIN	TYP	MAX	UNIT
D-8 PACKAGE - ISO672xB						
I_S	Safety input, output, or supply current [(1)]	$R_{\theta JA}$ =104.6°C/W, V_I = 5.5 V, T_J = 150°C, T_A = 25°C See 图 6-1			217.2	mA
		$R_{\theta JA}$ = 104.6°C/W, V_I = 3.6 V, T_J = 150°C, T_A = 25°C See 图 6-1			332	mA
		$R_{\theta JA}$ = 104.6°C/W, V_I = 2.75 V, T_J = 150°C, T_A = 25°C See 图 6-1			434.5	mA
		$R_{\theta JA}$ = 104.6°C/W, V_I = 1.89 V, T_J = 150°C, T_A = 25°C See 图 6-1			628.9	mA
P_S	Safety input, output, or total power [(1)]	$R_{\theta JA}$ = 104.6°C/W, T_J = 150°C, T_A = 25°C See 图 6-2			1195	mW
T_S	Maximum safety temperature [(1)]				150	°C

Copyright © 2023 Texas Instruments Incorporated

Safety limiting[(1)] intends to minimize potential damage to the isolation barrier upon failure of input or output circuitry.

PARAMETER		TEST CONDITIONS	MIN	TYP	MAX	UNIT
D-8 PACKAGE - ISO6721RB						
I_S	Safety input, output, or supply current [(1)]	$R_{\theta JA}$ = 98.5°C/W, V_I = 5.5 V, T_J = 150°C, T_A = 25°C See 图 6-3			230.7	mA
		$R_{\theta JA}$ = 98.5°C/W, V_I = 3.6 V, T_J = 150°C, T_A = 25°C See 图 6-3			352.5	mA
		$R_{\theta JA}$ = 98.5°C/W, V_I = 2.75 V, T_J = 150°C, T_A = 25°C See 图 6-3			461.5	mA
		$R_{\theta JA}$ = 98.5°C/W, V_I = 1.89 V, T_J = 150°C, T_A = 25°C See 图 6-3			671.4	mA
P_S	Safety input, output, or total power [(1)]	$R_{\theta JA}$ = 98.5°C/W, T_J = 150°C, T_A = 25°C See 图 6-4			1269	mW
T_S	Maximum safety temperature [(1)]				150	°C

(1) The maximum safety temperature, T_S, has the same value as the maximum junction temperature, T_J, specified for the device. The I_S and P_S parameters represent the safety current and safety power respectively. The maximum limits of I_S and P_S should not be exceeded. These limits vary with the ambient temperature, T_A.
The junction-to-air thermal resistance, $R_{\theta JA}$, in the table is that of a device installed on a high-K test board for leaded surface-mount packages. Use these equations to calculate the value for each parameter:
$T_J = T_A + R_{\theta JA} \times P$, where P is the power dissipated in the device.
$T_{J(max)} = T_S = T_A + R_{\theta JA} \times P_S$, where $T_{J(max)}$ is the maximum allowed junction temperature.
$P_S = I_S \times V_I$, where V_I is the maximum input voltage.

6.9 Electrical Characteristics—5-V Supply

V_{CC1} = V_{CC2} = 5 V ± 10% (over recommended operating conditions unless otherwise noted)

PARAMETER		TEST CONDITIONS	MIN	TYP	MAX	UNIT
V_{OH}	High-level output voltage	I_{OH} = -4 mA; See 图 7-1	V_{CCO} - 0.4			V
V_{OL}	Low-level output voltage	I_{OL} = 4 mA; See 图 7-1			0.4	V
$V_{IT+(IN)}$	Rising input switching threshold				0.7 x V_{CCI} (1)	V
$V_{IT-(IN)}$	Falling input switching threshold		0.3 x V_{CCI}			V
$V_{I(HYS)}$	Input threshold voltage hysteresis		0.1 x V_{CCI}			V
I_{IH}	High-level input current	V_{IH} = V_{CCI} (1) at INx			10	µA
I_{IL}	Low-level input current	V_{IL} = 0 V at INx	-10			µA
CMTI	Common mode transient immunity	V_I = V_{CC} or 0 V, V_{CM} = 1200 V	100	150		kV/us
C_i	Input Capacitance (2)	V_I = V_{CC}/ 2 + 0.4×sin(2 π ft), f = 2 MHz, V_{CC} = 5 V ; See 图 7-3		2.8		pF

(1) V_{CCI} = Input-side V_{CC}; V_{CCO} = Output-side V_{CC}
(2) Measured from input pin to same side ground.

6.10 Supply Current Characteristics—5-V Supply

V_{CC1} = V_{CC2} = 5 V ± 10% (over recommended operating conditions unless otherwise noted)

PARAMETER	TEST CONDITIONS		SUPPLY CURRENT	MIN	TYP	MAX	UNIT
ISO6720B							
Supply current - DC signal (2)	V_I = V_{CCI} (1)(ISO6720B), V_I = 0 V (ISO6720B with F suffix)		I_{CC1}		1.1	1.7	mA
			I_{CC2}		1.3	2.1	
	V_I = 0V (ISO6720B), V_I = V_{CC1} (ISO6720B with F suffix)		I_{CC1}		3.2	4.6	
			I_{CC2}		1.4	2.3	
Supply current - AC signal (3)	All channels switching with square wave clock input; C_L = 15 pF	1 Mbps	I_{CC1}		2.1	3.1	
			I_{CC2}		1.5	2.3	
		10 Mbps	I_{CC1}		2.2	3.2	
			I_{CC2}		2.7	3.6	
		50 Mbps	I_{CC1}		2.5	3.6	
			I_{CC2}		7.9	9.5	
ISO6721B							
Supply current - DC signal (2)	V_I = V_{CCI} (1)(ISO6721B); V_I = 0 V (ISO6721B with F suffix)		I_{CC1}, I_{CC2}		1.2	2.1	mA
	V_I = 0 V (ISO6721B); V_I = V_{CCI} (ISO6721B with F suffix)		I_{CC1}, I_{CC2}		2.3	3.5	
Supply current - AC signal (3)	All channels switching with square wave clock input; C_L = 15 pF	1 Mbps	I_{CC1}, I_{CC2}		1.9	2.9	
		10 Mbps	I_{CC1}, I_{CC2}		2.5	3.6	
		50 Mbps	I_{CC1}, I_{CC2}		5.2	6.7	

Copyright © 2023 Texas Instruments Incorporated

V_{CC1} = V_{CC2} = 5 V ± 10% (over recommended operating conditions unless otherwise noted)

PARAMETER	TEST CONDITIONS		SUPPLY CURRENT	MIN	TYP	MAX	UNIT
ISO6721RB							
Supply current - DC signal (2)	V_I = V_{CCI} (1)(ISO6721R); V_I = 0 V (ISO6721R with F suffix)		I_{CC1} , I_{CC2}		2.1	3.3	mA
	V_I = 0 V (ISO6721R); V_I = V_{CCI} (ISO6721R with F suffix)		I_{CC1} , I_{CC2}		3.2	4.7	
Supply current - AC signal (3)	All channels switching with square wave clock input; C_L = 15 pF	1 Mbps	I_{CC1}, I_{CC2}		2.7	4.1	
		10 Mbps	I_{CC1}, I_{CC2}		3.3	4.7	
		50 Mbps	I_{CC1}, I_{CC2}		6.0	7.7	

(1) V_{CCI} = Input-side V_{CC}
(2) Supply current valid for ENx = V_{CCx} and ENx = 0V
(3) Supply current valid for ENx = V_{CCx}

6.11 Electrical Characteristics—3.3-V Supply

V_{CC1} = V_{CC2} = 3.3 V ± 10% (over recommended operating conditions unless otherwise noted)

PARAMETER		TEST CONDITIONS	MIN	TYP	MAX	UNIT
V_{OH}	High-level output voltage	I_{OH} = -2mA ; See 图 7-1	V_{CCO} - 0.2			V
V_{OL}	Low-level output voltage	I_{OL} = 2mA ; See 图 7-1			0.2	V
$V_{IT+(IN)}$	Rising input switching threshold				0.7 x V_{CCI} (1)	V
$V_{IT-(IN)}$	Falling input switching threshold		0.3 x V_{CCI}			V
$V_{I(HYS)}$	Input threshold voltage hysteresis		0.1 x V_{CCI}			V
I_{IH}	High-level input current	V_{IH} = V_{CCI} (1) at INx			10	µA
I_{IL}	Low-level input current	V_{IL} = 0 V at INx	-10			µA
CMTI	Common mode transient immunity	V_I = V_{CC} or 0 V, V_{CM} = 1200 V	100	150		kV/us
C_i	Input Capacitance(2)	V_I = V_{CC}/ 2 + 0.4×sin(2 π ft), f = 2 MHz, V_{CC} = 3.3 V ; See 图 7-3		2.8		pF

(1) V_{CCI} = Input-side V_{CC}; V_{CCO} = Output-side V_{CC}
(2) Measured from input pin to same side ground.

6.12 Supply Current Characteristics—3.3-V Supply

V_{CC1} = V_{CC2} = 3.3 V ± 10% (over recommended operating conditions unless otherwise noted)

PARAMETER	TEST CONDITIONS		SUPPLY CURRENT	MIN	TYP	MAX	UNIT
ISO6720B							
Supply current - DC signal (2)	V_I = V_{CCI} (1) (ISO6720B), V_I = 0 V (ISO6720B with F suffix)		I_{CC1}		1.1	1.6	mA
			I_{CC2}		1.3	2	
	V_I = 0V (ISO6720B), V_I = V_{CC1} (ISO6720B with F suffix)		I_{CC1}		3.2	4.5	
			I_{CC2}		1.4	2.2	
Supply current - AC signal (3)	All channels switching with square wave clock input; C_L = 15 pF	1 Mbps	I_{CC1}		2.1	3.1	
			I_{CC2}		1.4	2.2	
		10 Mbps	I_{CC1}		2.2	3.1	
			I_{CC2}		2.3	3.2	
		50 Mbps	I_{CC1}		2.4	3.4	
			I_{CC2}		6	7.3	
ISO6721B							
Supply current - DC signal (2)	V_I = V_{CCI} (1) (ISO6721B); V_I = 0 V (ISO6721B with F suffix)		I_{CC1}, I_{CC2}		1.2	2.1	mA
	V_I = 0 V (ISO6721B); V_I = V_{CCI} (ISO6721B with F suffix)		I_{CC1}, I_{CC2}		2.3	3.5	
Supply current - AC signal (3)	All channels switching with square wave clock input; C_L = 15 pF	1 Mbps	I_{CC1}, I_{CC2}		1.8	2.8	
		10 Mbps	I_{CC1}, I_{CC2}		2.3	3.3	
		50 Mbps	I_{CC1}, I_{CC2}		4.2	5.5	

Copyright © 2023 Texas Instruments Incorporated

V_{CC1} = V_{CC2} = 3.3 V ± 10% (over recommended operating conditions unless otherwise noted)

PARAMETER	TEST CONDITIONS		SUPPLY CURRENT	MIN	TYP	MAX	UNIT
ISO6721RB							
Supply current - DC signal (2)	V_I = V_{CCI} (1) (ISO6721R); V_I = 0 V (ISO6721R with F suffix)		I_{CC1} , I_{CC2}		2.1	3.3	mA
	V_I = 0 V (ISO6721R); V_I = V_{CCI} (ISO6721R with F suffix)		I_{CC1} , I_{CC2}		3.2	4.7	mA
Supply current - AC signal (3)	All channels switching with square wave clock input; C_L = 15 pF	1 Mbps	I_{CC1}, I_{CC2}		2.7	4.0	mA
		10 Mbps	I_{CC1}, I_{CC2}		3.1	4.5	mA
		50 Mbps	I_{CC1}, I_{CC2}		5.0	6.7	mA

(1) V_{CCI} = Input-side V_{CC}
(2) Supply current valid for ENx = V_{CCx} and ENx = 0V
(3) Supply current valid for ENx = V_{CCx}

6.13 Electrical Characteristics—2.5-V Supply

V_{CC1} = V_{CC2} = 2.5 V ± 10% (over recommended operating conditions unless otherwise noted)

PARAMETER		TEST CONDITIONS	MIN	TYP	MAX	UNIT
V_{OH}	High-level output voltage	I_{OH} = -1mA ; See 图 7-1	V_{CCO} - 0.1			V
V_{OL}	Low-level output voltage	I_{OL} = 1mA ; See 图 7-1			0.1	V
$V_{IT+(IN)}$	Rising input switching threshold				0.7 x V_{CCI} (1)	V
$V_{IT-(IN)}$	Falling input switching threshold		0.3 x V_{CCI}			V
$V_{I(HYS)}$	Input threshold voltage hysteresis		0.1 x V_{CCI}			V
I_{IH}	High-level input current	V_{IH} = V_{CCI} (1) at INx			10	µA
I_{IL}	Low-level input current	V_{IL} = 0 V at INx	-10			µA
CMTI	Common mode transient immunity	V_I = V_{CC} or 0 V, V_{CM} = 1200 V	100	150		kV/us
C_i	Input Capacitance(2)	V_I = V_{CC}/ 2 + 0.4×sin(2 π ft), f = 2 MHz, V_{CC} = 2.5 V ; See 图 7-3		2.8		pF

(1) V_{CCI} = Input-side V_{CC}; V_{CCO} = Output-side V_{CC}
(2) Measured from input pin to same side ground.

6.14 Supply Current Characteristics—2.5-V Supply

V_{CC1} = V_{CC2} = 2.5 V ± 10% (over recommended operating conditions unless otherwise noted)

PARAMETER	TEST CONDITIONS		SUPPLY CURRENT	MIN	TYP	MAX	UNIT
ISO6720B							
Supply current - DC signal (2)	V_I = V_{CCI} (1)(ISO6720B), V_I = 0 V (ISO6720B with F suffix)		I_{CC1}		1.1	1.6	mA
			I_{CC2}		1.3	2	
	V_I = 0V (ISO6720B), V_I = V_{CC1} (ISO6720B with F suffix)		I_{CC1}		3.1	4.5	
			I_{CC2}		1.4	2.2	
Supply current - AC signal (3)	All channels switching with square wave clock input; C_L = 15 pF	1 Mbps	I_{CC1}		2.1	3.1	
			I_{CC2}		1.4	2.2	
		10 Mbps	I_{CC1}		2.1	3.1	
			I_{CC2}		2	2.9	
		50 Mbps	I_{CC1}		2.3	3.3	
			I_{CC2}		4.8	6	
ISO6721B							
Supply current - DC signal (2)	V_I = V_{CCI} (1) (ISO6721B); V_I = 0 V (ISO6721B with F suffix)		I_{CC1}, I_{CC2}		1.2	2.1	mA
	V_I = 0 V (ISO6721B); V_I = V_{CCI} (ISO6721B with F suffix)		I_{CC1}, I_{CC2}		2.3	3.5	
Supply current - AC signal (3)	All channels switching with square wave clock input; C_L = 15 pF	1 Mbps	I_{CC1}, I_{CC2}		1.8	2.8	
		10 Mbps	I_{CC1}, I_{CC2}		2.1	3.2	
		50 Mbps	I_{CC1}, I_{CC2}		3.6	4.9	

Copyright © 2023 Texas Instruments Incorporated

V_{CC1} = V_{CC2} = 2.5 V ± 10% (over recommended operating conditions unless otherwise noted)

PARAMETER	TEST CONDITIONS		SUPPLY CURRENT	MIN	TYP	MAX	UNIT
ISO6721RB							
Supply current - DC signal (2)	V_I = V_{CCI} (1)(ISO6721R); V_I = 0 V (ISO6721R with F suffix)		I_{CC1} , I_{CC2}		2.1	3.3	mA
	V_I = 0 V (ISO6721R); V_I = V_{CCI} (ISO6721R with F suffix)		I_{CC1} , I_{CC2}		3.2	4.7	mA
Supply current - AC signal (3)	All channels switching with square wave clock input; C_L = 15 pF	1 Mbps	I_{CC1}, I_{CC2}		2.7	4.0	mA
		10 Mbps	I_{CC1}, I_{CC2}		3.0	4.4	mA
		50 Mbps	I_{CC1}, I_{CC2}		4.4	6	mA

(1) V_{CCI} = Input-side V_{CC}
(2) Supply current valid for ENx = V_{CCx} and ENx = 0V
(3) Supply current valid for ENx = V_{CCx}

6.15 Electrical Characteristics—1.8-V Supply

V_{CC1} = V_{CC2} = 1.8 V ± 5% (over recommended operating conditions unless otherwise noted)

PARAMETER		TEST CONDITIONS	MIN	TYP	MAX	UNIT
V_{OH}	High-level output voltage	I_{OH} = -1mA ; See 图 7-1	V_{CCO} - 0.1			V
V_{OL}	Low-level output voltage	I_{OL} = 1mA ; See 图 7-1			0.1	V
$V_{IT+(IN)}$	Rising input switching threshold				0.7 x V_{CCI} (1)	V
$V_{IT-(IN)}$	Falling input switching threshold		0.3 x V_{CCI}			V
$V_{I(HYS)}$	Input threshold voltage hysteresis		0.1 x V_{CCI}			V
I_{IH}	High-level input current	V_{IH} = V_{CCI} (1) at INx			10	µA
I_{IL}	Low-level input current	V_{IL} = 0 V at INx	-10			µA
CMTI	Common mode transient immunity	V_I = V_{CC} or 0 V, V_{CM} = 1200 V	100	150		kV/us
C_i	Input Capacitance(2)	V_I = V_{CC}/ 2 + 0.4×sin(2 π ft), f = 2 MHz, V_{CC} = 1.8 V ; See 图 7-3		2.8		pF

(1) V_{CCI} = Input-side V_{CC}; V_{CCO} = Output-side V_{CC}
(2) Measured from input pin to same side ground.

6.16 Supply Current Characteristics—1.8-V Supply

V_{CC1} = V_{CC2} = 1.8 V ± 5% (over recommended operating conditions unless otherwise noted)

PARAMETER	TEST CONDITIONS		SUPPLY CURRENT	MIN	TYP	MAX	UNIT
ISO6720B							
Supply current - DC signal (2)	V_I = V_{CCI} (1) (ISO6720B), V_I = 0 V (ISO6720B with F suffix)		I_{CC1}		0.8	1.5	mA
			I_{CC2}		1.2	2.1	
	V_I = 0V (ISO6720B), V_I = V_{CC1} (ISO6720B with F suffix)		I_{CC1}		2.8	4.3	
			I_{CC2}		1.3	2.2	
Supply current - AC signal (3)	All channels switching with square wave clock input; C_L = 15 pF	1 Mbps	I_{CC1}		1.8	2.9	
			I_{CC2}		1.3	2.2	
		10 Mbps	I_{CC1}		1.8	2.9	
			I_{CC2}		1.8	2.7	
		50 Mbps	I_{CC1}		2	3.1	
			I_{CC2}		3.8	4.9	
ISO6721B							
Supply current - DC signal (2)	V_I = V_{CCI} (1) (ISO6721B); V_I = 0 V (ISO6721B with F suffix)		I_{CC1}, I_{CC2}		1.1	2	mA
	V_I = 0 V (ISO6721B); V_I = V_{CCI} (ISO6721B with F suffix)		I_{CC1}, I_{CC2}		2.1	3.4	
Supply current - AC signal (3)	All channels switching with square wave clock input; C_L = 15 pF	1 Mbps	I_{CC1}, I_{CC2}		1.6	2.7	
		10 Mbps	I_{CC1}, I_{CC2}		1.9	3	
		50 Mbps	I_{CC1}, I_{CC2}		3	4.2	

Copyright © 2023 Texas Instruments Incorporated

V_{CC1} = V_{CC2} = 1.8 V ± 5% (over recommended operating conditions unless otherwise noted)

PARAMETER	TEST CONDITIONS		SUPPLY CURRENT	MIN	TYP	MAX	UNIT
ISO6721RB							
Supply current - DC signal (2)	V_I = V_{CCI} (1)(ISO6721R); V_I = 0 V (ISO6721R with F suffix)		I_{CC1} , I_{CC2}		1.8	3.1	mA
	V_I = 0 V (ISO6721R); V_I = V_{CCI} (ISO6721R with F suffix)		I_{CC1} , I_{CC2}		2.9	4.5	mA
Supply current - AC signal (3)	All channels switching with square wave clock input; C_L = 15 pF	1 Mbps	I_{CC1}, I_{CC2}		2.4	3.8	mA
		10 Mbps	I_{CC1}, I_{CC2}		2.6	4.1	mA
		50 Mbps	I_{CC1}, I_{CC2}		3.7	5.3	mA

(1) V_{CCI} = Input-side V_{CC}
(2) Supply current valid for ENx = V_{CCx} and ENx = 0V
(3) Supply current valid for ENx = V_{CCx}

6.17 Switching Characteristics—5-V Supply

V_{CC1} = V_{CC2} = 5 V ± 10% (over recommended operating conditions unless otherwise noted)

PARAMETER		TEST CONDITIONS	MIN	TYP	MAX	UNIT
t_{PLH}, t_{PHL}	Propagation delay time	See 图 7-1		11	18	ns
$t_{P(dft)}$	Propagation delay drift			8		ps/℃
t_{UI}	Minimum pulse width	See 图 7-1	20			ns
PWD	Pulse width distortion[(1)] $\lvert t_{PHL} - t_{PLH} \rvert$	See 图 7-1		0.2	7	ns
$t_{sk(o)}$	Channel-to-channel output skew time [(2)]	Same direction channels			6	ns
$t_{sk(p-p)}$	Part-to-part skew time [(3)]				6	ns
t_r	Output signal rise time	See 图 7-1		2.6	4.5	ns
t_f	Output signal fall time			2.6	4.5	ns
t_{PU}	Time from UVLO to valid output data				300	us
t_{DO}	Default output delay time from input power loss	Measured from the time V_{CC} goes below 1.2V. See 图 7-2		0.1	0.3	us
t_{ie}	Time interval error	2^{16} – 1 PRBS data at 50 Mbps		1		ns

(1) Also known as pulse skew.
(2) $t_{sk(o)}$ is the skew between outputs of a single device with all driving inputs connected together and the outputs switching in the same direction while driving identical loads.
(3) $t_{sk(pp)}$ is the magnitude of the difference in propagation delay times between any terminals of different devices switching in the same direction while operating at identical supply voltages, temperature, input signals and loads.

6.18 Switching Characteristics—3.3-V Supply

V_{CC1} = V_{CC2} = 3.3 V ± 10% (over recommended operating conditions unless otherwise noted)

PARAMETER		TEST CONDITIONS	MIN	TYP	MAX	UNIT
t_{PLH}, t_{PHL}	Propagation delay time	See 图 7-1		11	18	ns
$t_{P(dft)}$	Propagation delay drift			9.2		ps/℃
t_{UI}	Minimum pulse width	See 图 7-1	20			ns
PWD	Pulse width distortion[(1)] $\lvert t_{PHL} - t_{PLH} \rvert$	See 图 7-1		0.5	7	ns
$t_{sk(o)}$	Channel-to-channel output skew time [(2)]	Same direction channels			6	ns
$t_{sk(p-p)}$	Part-to-part skew time [(3)]				6	ns
t_r	Output signal rise time	See 图 7-1		1.6	3.2	ns
t_f	Output signal fall time			1.6	3.2	ns
t_{PU}	Time from UVLO to valid output data				300	us
t_{DO}	Default output delay time from input power loss	Measured from the time V_{CC} goes below 1.2V. See 图 7-2		0.1	0.3	us
t_{ie}	Time interval error	2^{16} – 1 PRBS data at 50 Mbps		1		ns

(1) Also known as pulse skew.
(2) $t_{sk(o)}$ is the skew between outputs of a single device with all driving inputs connected together and the outputs switching in the same direction while driving identical loads.
(3) $t_{sk(pp)}$ is the magnitude of the difference in propagation delay times between any terminals of different devices switching in the same direction while operating at identical supply voltages, temperature, input signals and loads.

Copyright © 2023 Texas Instruments Incorporated

6.19 Switching Characteristics—2.5-V Supply

V_{CC1} = V_{CC2} = 2.5 V ± 10% (over recommended operating conditions unless otherwise noted)

PARAMETER		TEST CONDITIONS	MIN	TYP	MAX	UNIT
t_{PLH}, t_{PHL}	Propagation delay time	See 图 7-1		12	20.5	ns
$t_{P(dft)}$	Propagation delay drift			14.3		ps/℃
t_{UI}	Minimum pulse width	See 图 7-1	20			ns
PWD	Pulse width distortion[(1)] $\lvert t_{PHL} - t_{PLH} \rvert$	See 图 7-1		0.6	7.1	ns
$t_{sk(o)}$	Channel-to-channel output skew time[(2)]	Same direction channels			6	ns
$t_{sk(p-p)}$	Part-to-part skew time[(3)]				6.1	ns
t_r	Output signal rise time	See 图 7-1		2	4	ns
t_f	Output signal fall time			2	4	ns
t_{PU}	Time from UVLO to valid output data				300	us
t_{DO}	Default output delay time from input power loss	Measured from the time V_{CC} goes below 1.2V. See 图 7-2		0.1	0.3	us
t_{ie}	Time interval error	2^{16} – 1 PRBS data at 50 Mbps		1		ns

(1) Also known as pulse skew.
(2) $t_{sk(o)}$ is the skew between outputs of a single device with all driving inputs connected together and the outputs switching in the same direction while driving identical loads.
(3) $t_{sk(pp)}$ is the magnitude of the difference in propagation delay times between any terminals of different devices switching in the same direction while operating at identical supply voltages, temperature, input signals and loads.

6.20 Switching Characteristics—1.8-V Supply

V_{CC1} = V_{CC2} = 1.8 V ± 5% (over recommended operating conditions unless otherwise noted)

PARAMETER		TEST CONDITIONS	MIN	TYP	MAX	UNIT
t_{PLH}, t_{PHL}	Propagation delay time	See 图 7-1		15	24	ns
$t_{P(dft)}$	Propagation delay drift			15.2		ps/℃
t_{UI}	Minimum pulse width	See 图 7-1	20			ns
PWD	Pulse width distortion[(1)] $\lvert t_{PHL} - t_{PLH} \rvert$	See 图 7-1		0.7	8.2	ns
$t_{sk(o)}$	Channel-to-channel output skew time[(2)]	Same direction channels			6	ns
$t_{sk(p-p)}$	Part-to-part skew time[(3)]				8.8	ns
t_r	Output signal rise time	See 图 7-1		2.7	5.3	ns
t_f	Output signal fall time			2.7	5.3	ns
t_{PU}	Time from UVLO to valid output data				300	us
t_{DO}	Default output delay time from input power loss	Measured from the time V_{CC} goes below 1.2V. See 图 7-2		0.1	0.3	us
t_{ie}	Time interval error	2^{16} – 1 PRBS data at 50 Mbps		1		ns

(1) Also known as pulse skew.
(2) $t_{sk(o)}$ is the skew between outputs of a single device with all driving inputs connected together and the outputs switching in the same direction while driving identical loads.
(3) $t_{sk(pp)}$ is the magnitude of the difference in propagation delay times between any terminals of different devices switching in the same direction while operating at identical supply voltages, temperature, input signals and loads.

6.21 Insulation Characteristics Curves

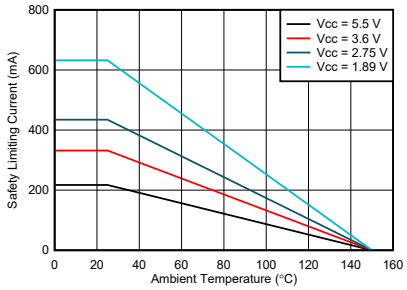

图 6-1. Thermal Derating Curve for Safety Limiting Current for D-8 Package - ISO672x

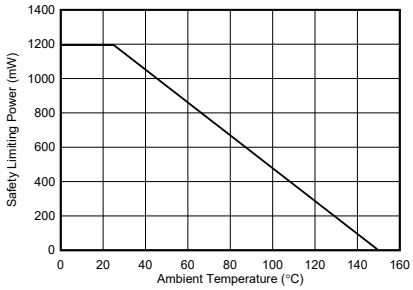

图 6-2. Thermal Derating Curve for Safety Limiting Power for D-8 Package - ISO672x

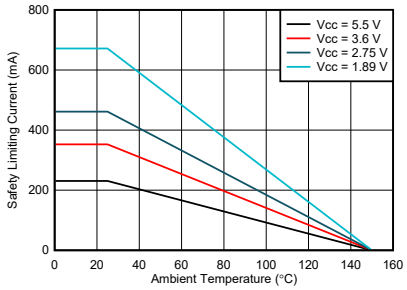

图 6-3. Thermal Derating Curve for Safety Limiting Current for D-8 Package - ISO6721R

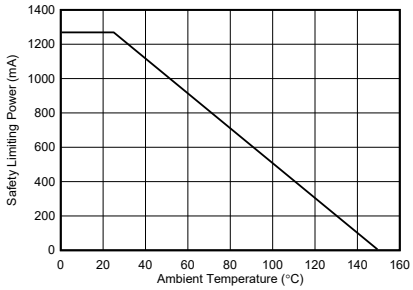

图 6-4. Thermal Derating Curve for Safety Limiting Power for D-8 Package - ISO6721R

Copyright © 2023 Texas Instruments Incorporated

6.22 Typical Characteristics

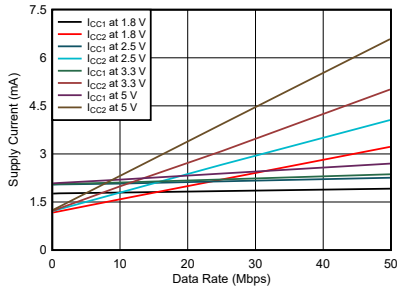

T_A = 25°C C_L = 15 pF

图 6-5. ISO6720B Supply Current vs Data Rate (With 15-pF Load)

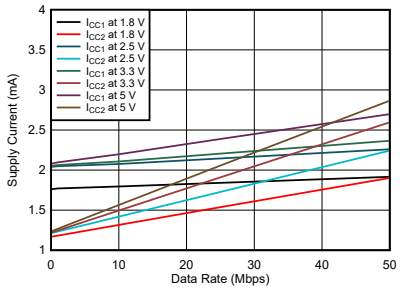

T_A = 25°C C_L = No Load

图 6-6. ISO6720B Supply Current vs Data Rate (With No Load)

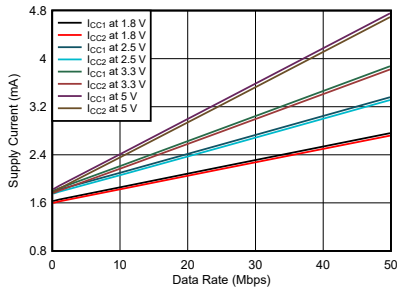

T_A = 25°C C_L = 15 pF

图 6-7. ISO6721B Supply Current vs Data Rate (With 15-pF Load)

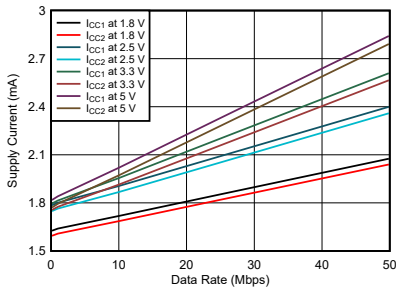

T_A = 25°C C_L = No Load

图 6-8. ISO6721B Supply Current vs Data Rate (With No Load)

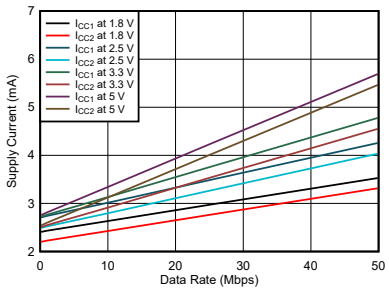

T_A = 25°C C_L = 15 pF

图 6-9. ISO6721RB Supply Current vs Data Rate (With 15-pF Load)

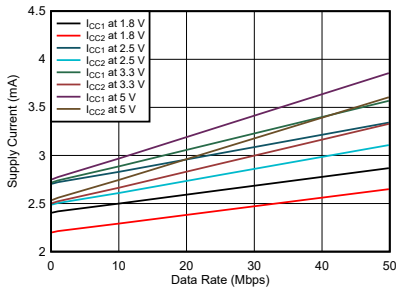

T_A = 25°C C_L = No Load

图 6-10. ISO6721RB Supply Current vs Data Rate (With No Load)

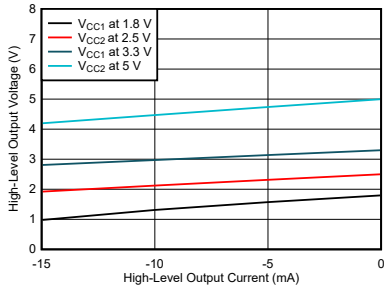

T_A = 25°C

图 6-11. High-Level Output Voltage vs High-level Output Current

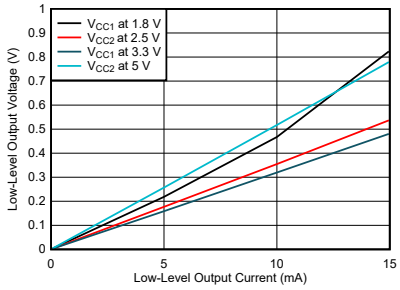

T_A = 25°C

图 6-12. Low-Level Output Voltage vs Low-Level Output Current

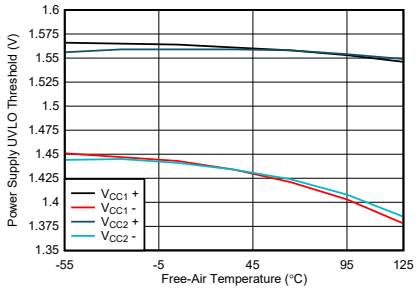

图 6-13. Power Supply Undervoltage Threshold vs Free-Air Temperature

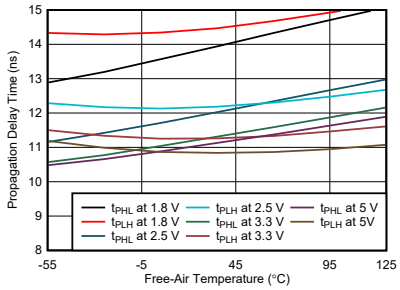

图 6-14. Propagation Delay Time vs Free-Air Temperature

Copyright © 2023 Texas Instruments Incorporated

7 Parameter Measurement Information

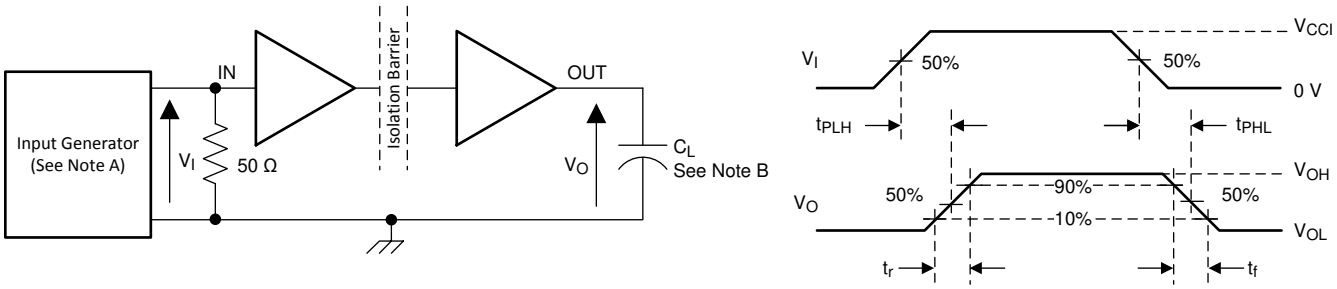

A. The input pulse is supplied by a generator having the following characteristics: PRR ≤ 50 kHz, 50% duty cycle, t_r ≤ 3 ns, t_f ≤ 3 ns, Z_O = 50 Ω. At the input, 50 Ω resistor is required to terminate Input Generator signal. It is not needed in actual application.

B. C_L = 15 pF and includes instrumentation and fixture capacitance within ±20%.

图 7-1. Switching Characteristics Test Circuit and Voltage Waveforms

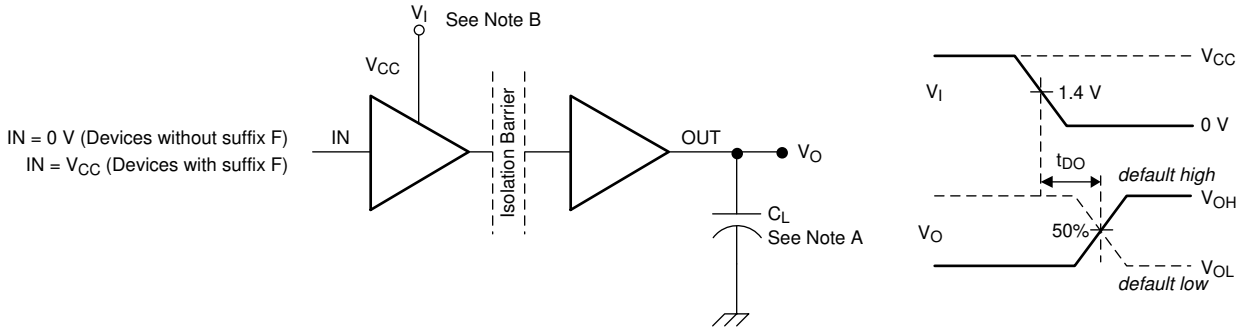

A. C_L = 15 pF and includes instrumentation and fixture capacitance within ±20%.

B. Power Supply Ramp Rate = 10 mV/ns

图 7-2. Default Output Delay Time Test Circuit and Voltage Waveforms

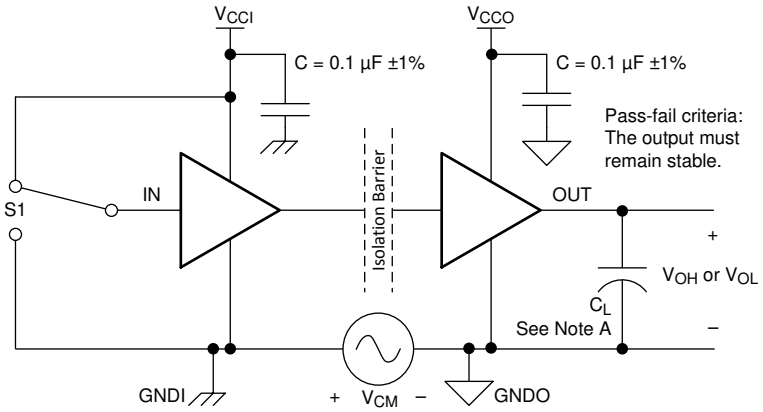

A. C_L = 15 pF and includes instrumentation and fixture capacitance within ±20%.

图 7-3. Common-Mode Transient Immunity Test Circuit

8 Detailed Description

8.1 Overview

The ISO672xB family of devices has an ON-OFF keying (OOK) modulation scheme to transmit the digital data across a silicon dioxide based isolation barrier. The transmitter sends a high frequency carrier across the barrier to represent one digital state and sends no signal to represent the other digital state. The receiver demodulates the signal after advanced signal conditioning and produces the output through a buffer stage. These devices also incorporate advanced circuit techniques to maximize the CMTI performance and minimize the radiated emissions due the high frequency carrier and IO buffer switching. The conceptual block diagram of a digital capacitive isolator, 图 8-1, shows a functional block diagram of a typical channel.

8.2 Functional Block Diagram

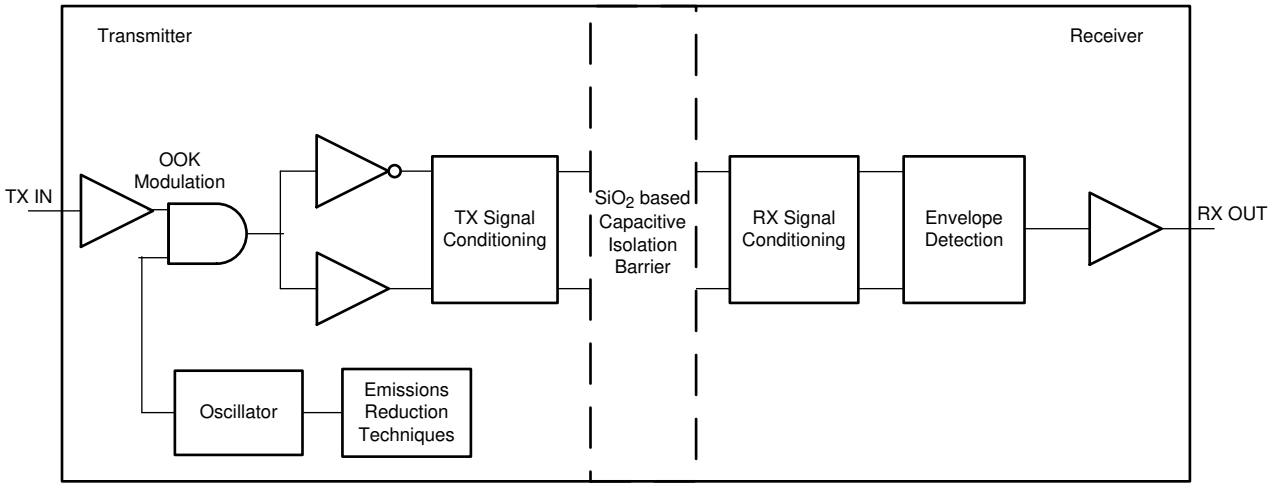

图 8-1. Conceptual Block Diagram of a Digital Capacitive Isolator

图 8-2 shows a conceptual detail of how the OOK scheme works.

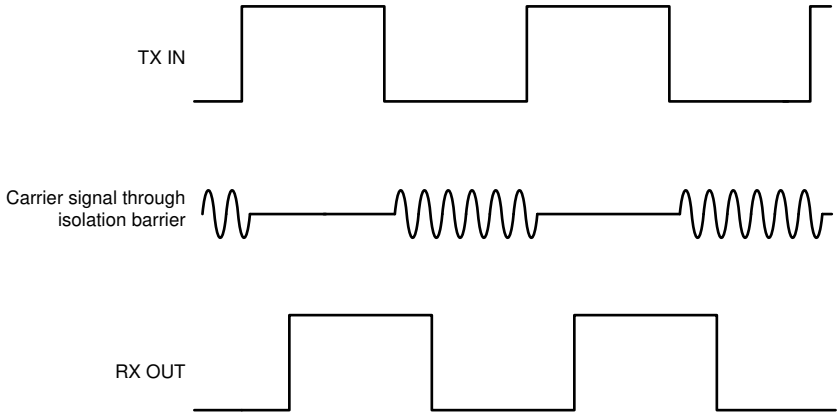

图 8-2. On-Off Keying (OOK) Based Modulation Scheme

Copyright © 2023 Texas Instruments Incorporated

8.3 Feature Description

The ISO672xB family of devices is available in two channel configurations and default output state options to enable a variety of application uses. 表 8-1 lists the device features of the ISO672xB devices.

表 8-1. Device Features

PART NUMBER	MAXIMUM DATA RATE	CHANNEL DIRECTION	DEFAULT OUTPUT STATE	PACKAGE	RATED ISOLATION(1)
ISO6720B	50 Mbps	2 Forward, 0 Reverse	High	D-8	3000 V_{RMS} / 4242 V_{PK}
ISO6720FB	50 Mbps	2 Forward, 0 Reverse	Low	D-8	3000 V_{RMS} / 4242 V_{PK}
ISO6721B	50 Mbps	1 Forward, 1 Reverse	High	D-8	3000 V_{RMS} / 4242 V_{PK}
ISO6721FB	50 Mbps	1 Forward, 1 Reverse	Low	D-8	3000 V_{RMS} / 4242 V_{PK}
ISO6721RB	50 Mbps	1 Forward, 1 Reverse	High	D-8	3000 V_{RMS} / 4242 V_{PK}
ISO6721RFB	50 Mbps	1 Forward, 1 Reverse	Low	D-8	3000 V_{RMS} / 4242 V_{PK}

(1) See Safety-Related Certifications for detailed isolation ratings.

8.3.1 Electromagnetic Compatibility (EMC) Considerations

Many applications in harsh industrial environment are sensitive to disturbances such as electrostatic discharge (ESD), electrical fast transient (EFT), surge and electromagnetic emissions. These electromagnetic disturbances are regulated by international standards such as IEC 61000-4-x and CISPR 32. Although system-level performance and reliability depends, to a large extent, on the application board design and layout, the ISO672xB family of devices incorporates many chip-level design improvements for overall system robustness. Some of these improvements include:

- Robust ESD protection cells for input and output signal pins and inter-chip bond pads.
- Low-resistance connectivity of ESD cells to supply and ground pins.
- Enhanced performance of high voltage isolation capacitor for better tolerance of ESD, EFT and surge events.
- Bigger on-chip decoupling capacitors to bypass undesirable high energy signals through a low impedance path.
- PMOS and NMOS devices isolated from each other by using guard rings to avoid triggering of parasitic SCRs.
- Reduced common mode currents across the isolation barrier by ensuring purely differential internal operation.

Copyright © 2023 Texas Instruments Incorporated

8.4 Device Functional Modes

表 8-2 lists the functional modes for the ISO672xB devices.

表 8-2. Function Table

V_{CCI} (1)	V_{CCO}	INPUT (INx)(2)	OUTPUT (OUTx)	COMMENTS
PU	PU	H	H	Normal Operation: A channel output assumes the logic state of the input.
		L	L	
		Open	Default	Default mode: When INx is open, the corresponding channel output goes to the default logic state. The default is *High* for ISO672xB and *Low* for ISO672xB with F suffix.
PD	PU	X	Default	Default mode: When V_{CCI} is unpowered, a channel output assumes the logic state based on the selected default option. The default is *High* for ISO672xB and *Low* for ISO672xB with F suffix. When V_{CCI} transitions from unpowered to powered-up, a channel output assumes the logic state of the input. When V_{CCI} transitions from powered-up to unpowered, channel output assumes the selected default state.
X	PD	X	Undetermined	When V_{CCO} is unpowered, a channel output is undetermined(3). When V_{CCO} transitions from unpowered to powered-up, a channel output assumes the logic state of the input

(1) V_{CCI} = Input-side V_{CC}; V_{CCO} = Output-side V_{CC}; PU = Powered up ($V_{CC} \geqslant 1.71$V); PD = Powered down ($V_{CC} \leqslant 1.05$ V); X = Irrelevant; H = High level; L = Low level
(2) A strongly driven input signal can weakly power the floating V_{CC} via an internal protection diode and cause undetermined output.
(3) The outputs are in undetermined state when 1.89 V < V_{CCI}, V_{CCO} < 2.25 V and 1.05 V < V_{CCI}, V_{CCO} < 1.71 V

8.4.1 Device I/O Schematics

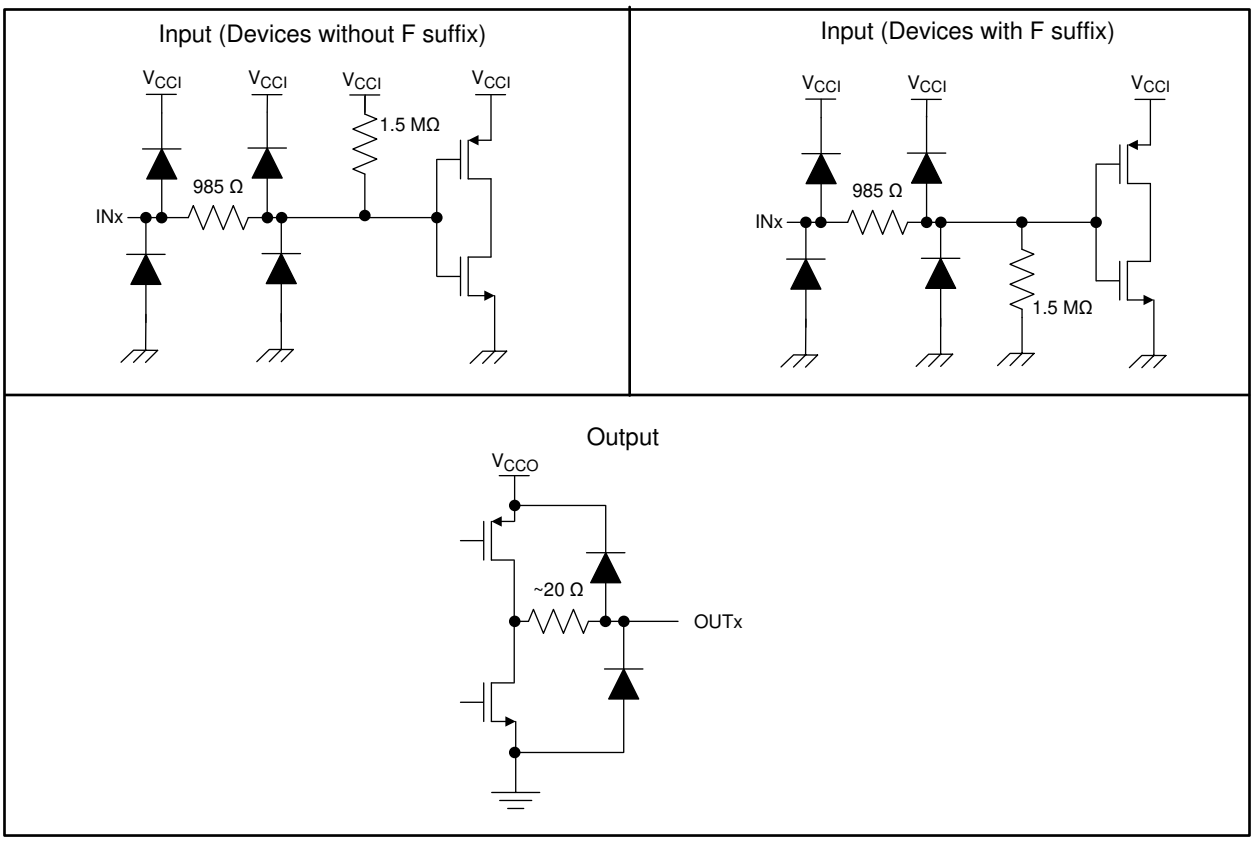

图 8-3. Device I/O Schematics

Copyright © 2023 Texas Instruments Incorporated

9 Application and Implementation

备注

Information in the following applications sections is not part of the TI component specification, and TI does not warrant the accuracy or completeness. TI’s customers are responsible for determining suitability of components for their purposes. Customers should validate and test their design implementation to confirm system functionality.

9.1 Application Information

The ISO672xB devices are high-performance, dual-channel digital isolators. The devices use single-ended CMOS-logic switching technology. The supply voltage range is from 1.71 V to 5.5 V for both supplies, V_{CC1} and V_{CC2}. Since an isolation barrier separates the two sides, each side can be sourced independently with any voltage within recommended operating conditions. As an example, it is possible to supply ISO672xB V_{CC1} with 3.3 V (which is within 1.71 V to 1.89 V and 2.25 V to 5 V) and V_{CC2} with 5 V (which is also within 1.71 V to 1.89 V and 2.25 V to 5 V). You can use the digital isolator as a logic-level translator in addition to providing isolation. When designing with digital isolators, keep in mind that because of the single-ended design structure, digital isolators do not conform to any specific interface standard and are only intended for isolating single-ended CMOS or TTL digital signal lines. The isolator is typically placed between the data controller (that is, MCU or FPGA), and a data converter or a line transceiver, regardless of the interface type or standard.

Copyright © 2023 Texas Instruments Incorporated

9.2 Typical Application

For industrial applications, the ISO672xB device can be used with Texas Instruments' mixed signal microcontroller, digital-to-analog converter, transformer driver, and voltage regulator to create an isolated 4-mA to 20-mA current loop.

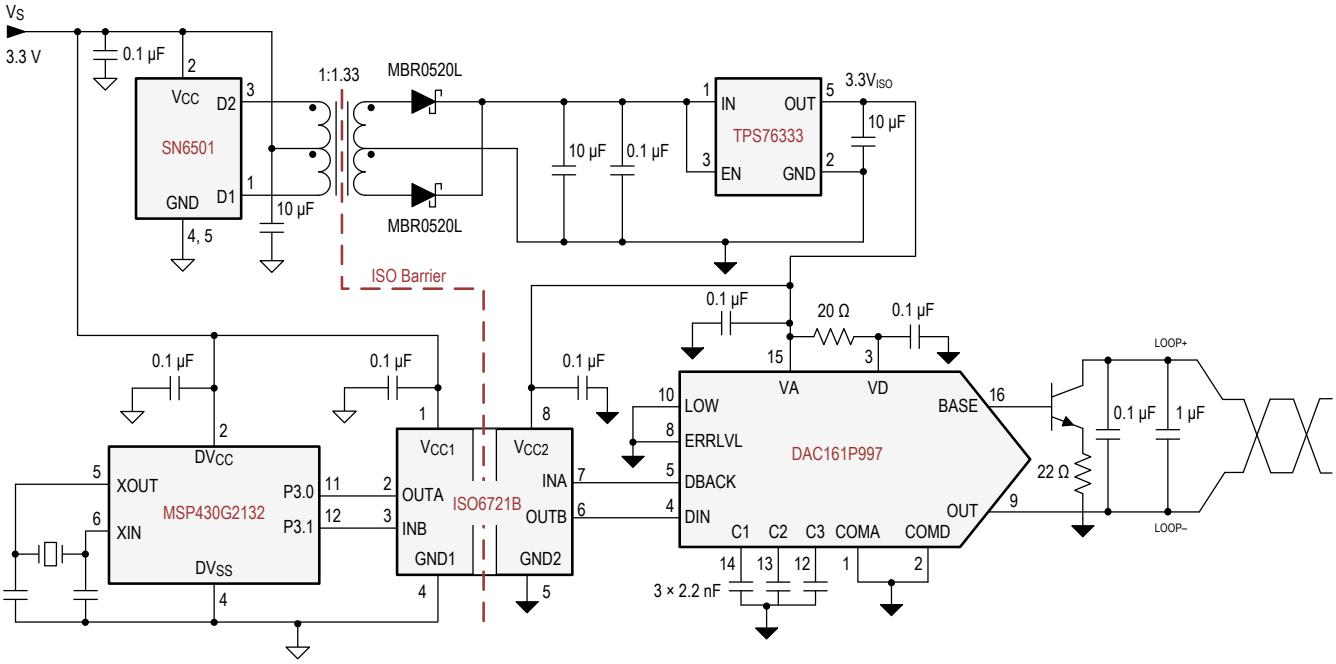

图 9-1. Isolated 4-mA to 20-mA Current Loop

Copyright © 2023 Texas Instruments Incorporated

9.2.1 Design Requirements

To design with these devices, use the parameters listed in 表 9-1.

表 9-1. Design Parameters

PARAMETER	VALUE
Supply voltage, V_{CC1} and V_{CC2}	1.71 V to 1.89 V and 2.25 V to 5.5 V
Decoupling capacitor between V_{CC1} and GND1	0.1 µF
Decoupling capacitor from V_{CC2} and GND2	0.1 µF

9.2.2 Detailed Design Procedure

Unlike optocouplers, which require external components to improve performance, provide bias, or limit current, the ISO672xB devices only require two external bypass capacitors to operate.

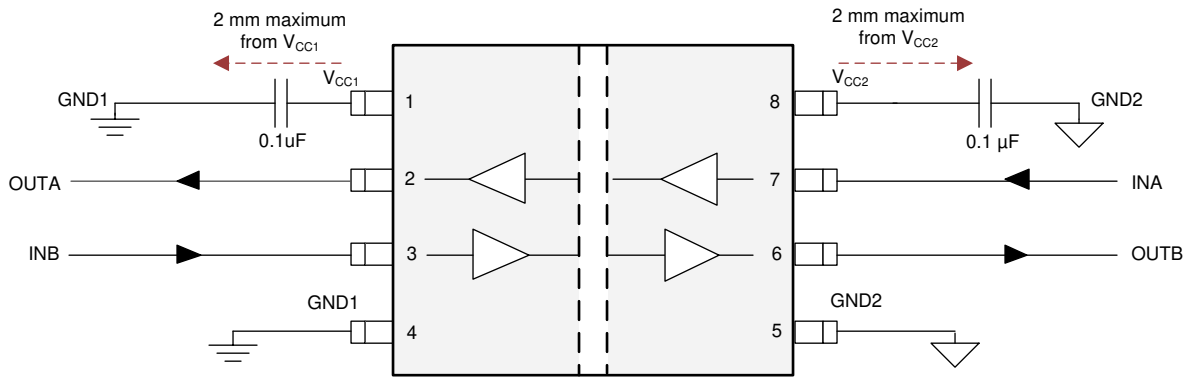

图 9-2. Typical ISO672xB Circuit Hook-up

9.2.3 Application Curve

The following typical eye diagrams of the ISO672xB family of devices indicate low jitter and wide open eye at the maximum data rate of 50 Mbps.

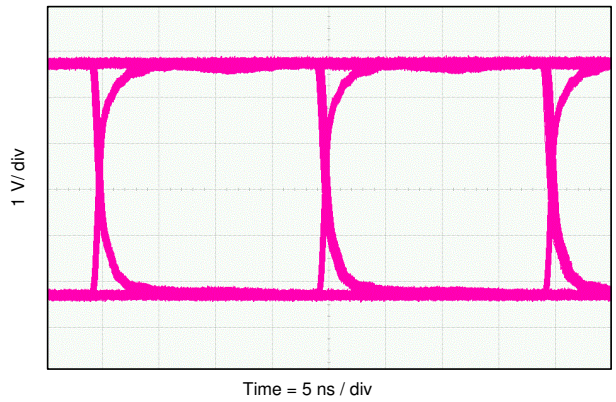

图 9-3. Eye Diagram at 50 Mbps PRBS 2^{16} – 1, 5 V and 25°C

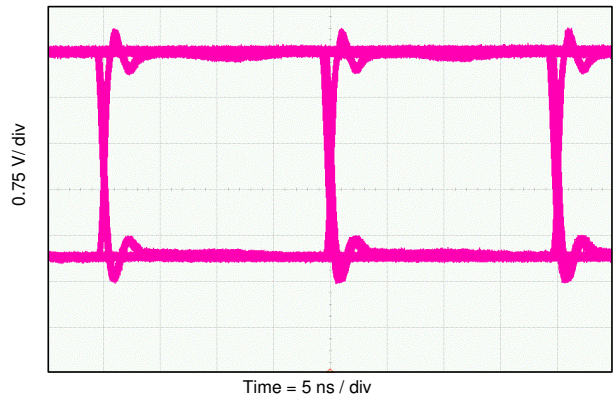

图 9-4. Eye Diagram at 50 Mbps PRBS 2^{16} – 1, 3.3 V and 25°C

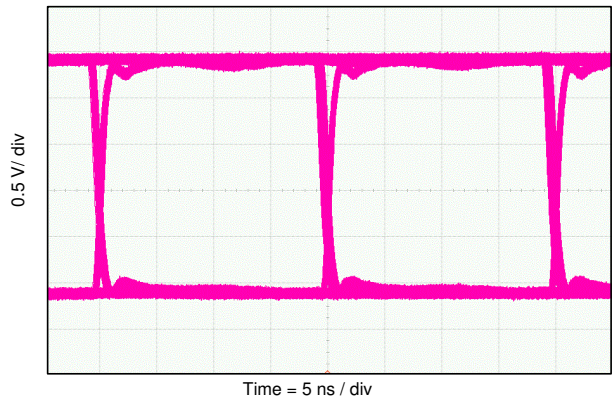

图 9-5. Eye Diagram at 50 Mbps PRBS 2^{16} – 1, 2.5 V and 25°C

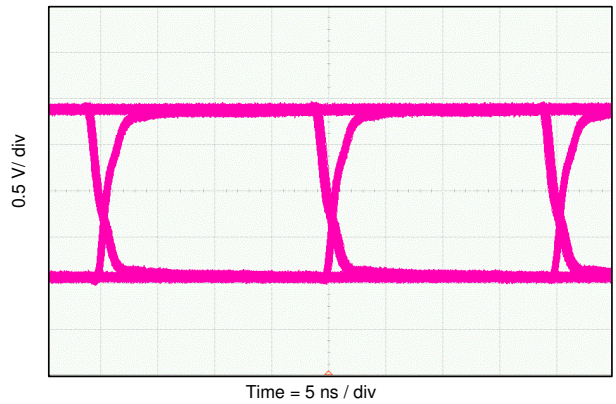

图 9-6. Eye Diagram at 50 Mbps PRBS 2^{16} – 1, 1.8 V and 25°C

9.3 *Insulation Lifetime*

Insulation lifetime projection data is collected by using industry-standard Time Dependent Dielectric Breakdown (TDDB) test method. In this test, all pins on each side of the barrier are tied together creating a two-terminal device and high voltage applied between the two sides; See 图 9-7 for TDDB test setup. The insulation breakdown data is collected at various high voltages switching at 60 Hz over temperature. For basic insulation, VDE standard requires the use of TDDB projection line with failure rate of less than 1000 part per million (ppm). For reinforced insulation, VDE standard requires the use of TDDB projection line with failure rate of less than 1 part per million (ppm).

Even though the expected minimum insulation lifetime is 20 years, at the specified working isolation voltage, VDE basic and reinforced certifications require additional safety margin of 20% for working voltage. For basic certification, device lifetime requires a safety margin of 20% translating to a minimum required insulation lifetime of 24 years at a working voltage that is 20% higher than the specified value.

图 9-8 shows the intrinsic capability of the isolation barrier to withstand high voltage stress over its lifetime. Based on the TDDB data, the intrinsic capability of the insulation is 450 V_{RMS} with a lifetime of >100 years in the 8D package . Other factors, such as package size, pollution degree, material group, etc. can further limit the working voltage of the component. At the lower working voltages, the corresponding insulation lifetime is much longer than 100 years in the 8-D package.

Copyright © 2023 Texas Instruments Incorporated

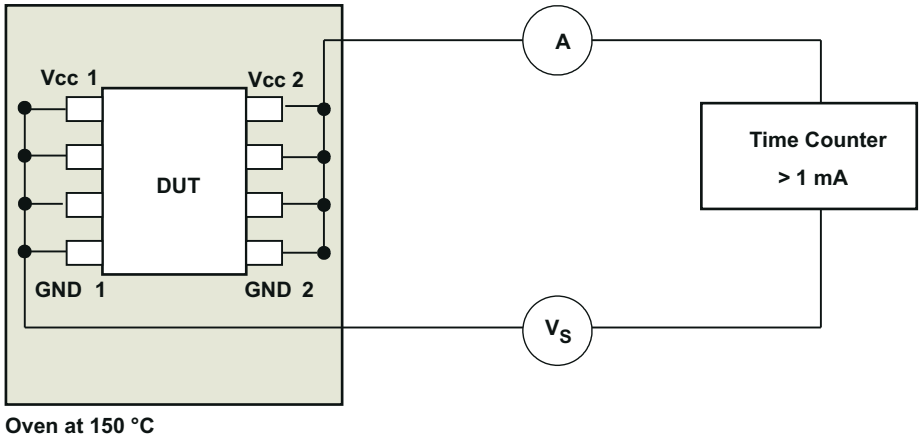

图 9-7. Test Setup for Insulation Lifetime Measurement

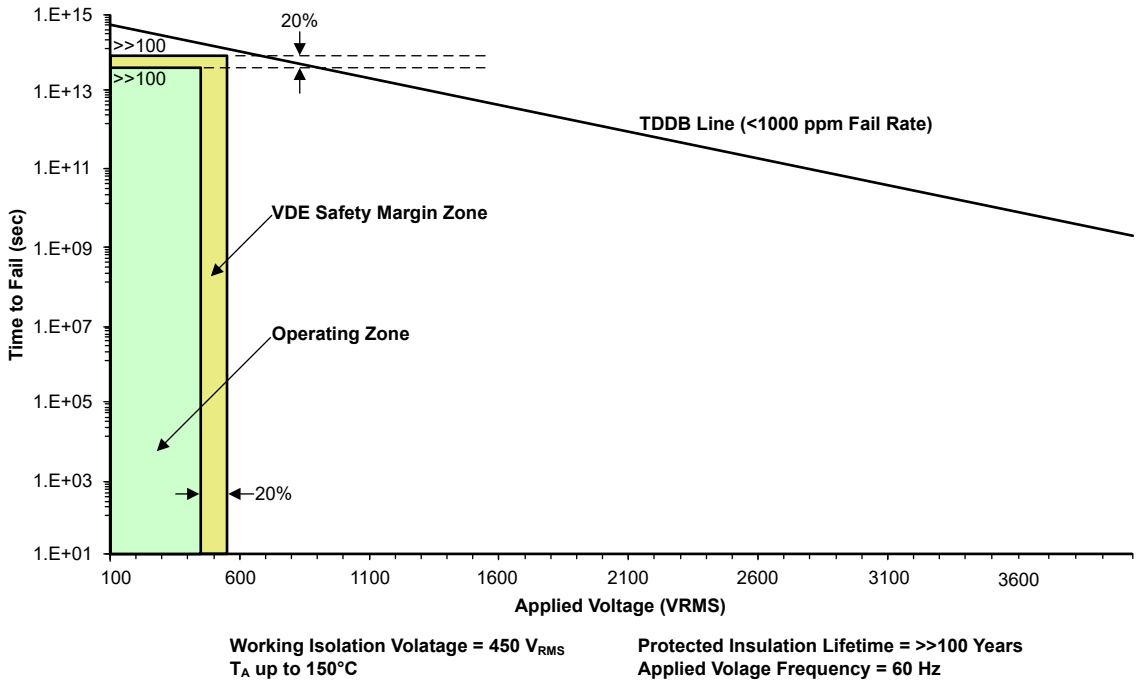

图 9-8. Insulation Lifetime Projection Data for 8-D Package

10 Power Supply Recommendations

To help ensure reliable operation at data rates and supply voltages, a 0.1-µF bypass capacitor is recommended at the input and output supply pins (V_{CC1} and V_{CC2}). The capacitors should be placed as close to the supply pins as possible. If only a single primary-side power supply is available in an application, isolated power can be generated for the secondary-side with the help of a transformer driver. For industrial applications, please use Texas Instruments' SN6501 or SN6505B. For such applications, detailed power supply design and transformer selection recommendations are available in *SN6501 Transformer Drivers for Isolated Power Supplies* or *SN6505B-Q1 Low-noise, 1-A Transformer Drivers for Isolated Power Supplies*.

Copyright © 2023 Texas Instruments Incorporated

11 Layout

11.1 Layout Guidelines

A minimum of two layers is required to accomplish a cost optimized and low EMI PCB design. To further improve EMI, a four layer board can be used (see 节 11.2). Layer stacking for a four layer board should be in the following order (top-to-bottom): high-speed signal layer, ground plane, power plane and low-frequency signal layer.

- Routing the high-speed traces on the top layer avoids the use of vias (and the introduction of their inductances) and allows for clean interconnects between the isolator and the transmitter and receiver circuits of the data link.
- Placing a solid ground plane next to the high-speed signal layer establishes controlled impedance for transmission line interconnects and provides an excellent low-inductance path for the return current flow.
- Placing the power plane next to the ground plane creates additional high-frequency bypass capacitance of approximately 100 pF/in^2.
- Routing the slower speed control signals on the bottom layer allows for greater flexibility as these signal links usually have margin to tolerate discontinuities such as vias.

If an additional supply voltage plane or signal layer is needed, add a second power or ground plane system to the stack to keep it symmetrical. This makes the stack mechanically stable and prevents it from warping. Also the power and ground plane of each power system can be placed closer together, thus increasing the high-frequency bypass capacitance significantly.

For detailed layout recommendations, refer to the *Digital Isolator Design Guide*.

11.1.1 PCB Material

For digital circuit boards operating at less than 150 Mbps, (or rise and fall times greater than 1 ns), and trace lengths of up to 10 inches, use standard FR-4 UL94V-0 printed circuit board. This PCB is preferred over cheaper alternatives because of lower dielectric losses at high frequencies, less moisture absorption, greater strength and stiffness, and the self-extinguishing flammability-characteristics.

Copyright © 2023 Texas Instruments Incorporated

11.2 Layout Example

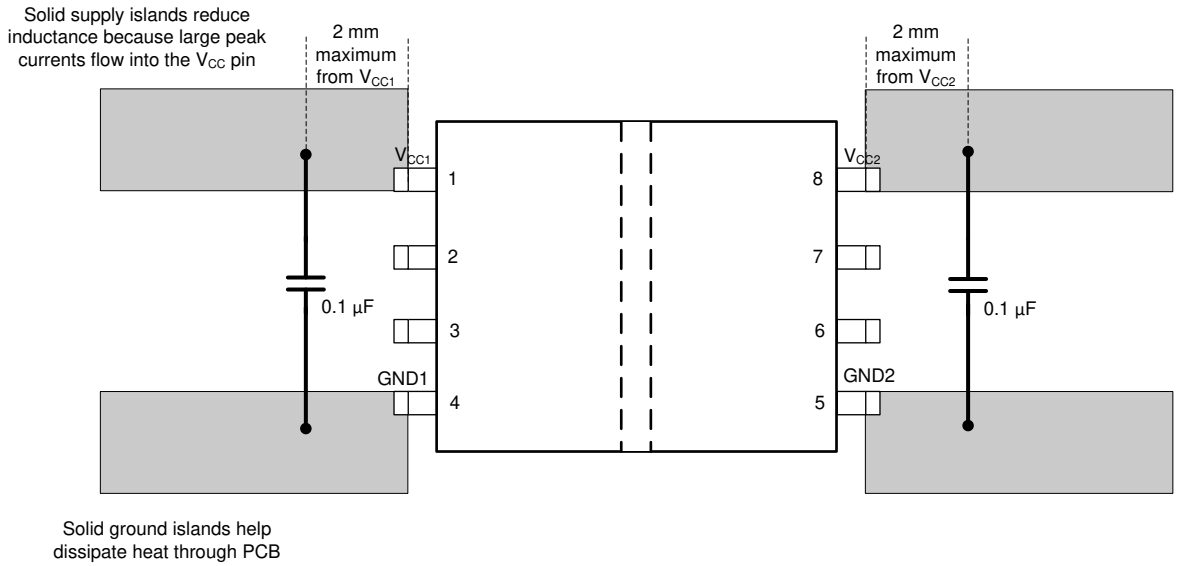

图 11-1. Layout Example

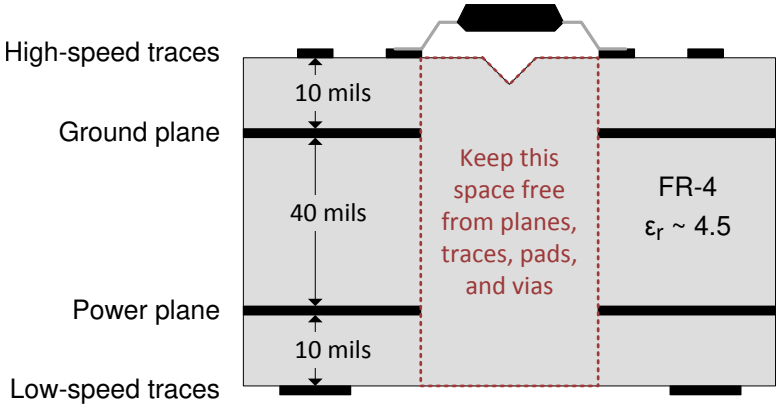

图 11-2. Four Layer Board Layout Example

Copyright © 2023 Texas Instruments Incorporated

12 Device and Documentation Support

12.1 Device Support

12.1.1 Development Support

For development support, refer to:

- Isolated CAN Flexible Data (FD) Rate Repeater Reference Design
- Isolated 16-Channel AC Analog Input Module Reference Design Using Dual Simultaneously Sampled ADCs
- Polyphase Shunt Metrology with Isolated AFE Reference Design
- Reference Design for Power-Isolated Ultra-Compact Analog Output Module

12.2 Documentation Support

12.2.1 Related Documentation

For related documentation, see the following:

- Texas Instruments, *Digital Isolator Design Guide*
- Texas Instruments, *How to use isolation to improve ESD, EFT and Surge immunity in industrial systems* application report
- Texas Instruments, *Isolation Glossary*
- Texas Instruments, *Enabling high voltage signal isolation quality and reliability*
- Texas Instruments, *DAC161P997 Single-Wire 16-bit DAC for 4- to 20-mA Loops* data sheet
- Texas Instruments, MSP430G2132 *Mixed Signal Microcontroller* data sheet
- Texas Instruments, *SN6501 Transformer Driver for Isolated Power Supplies* data sheet
- Texas Instruments, TPS76333 *Low-Power 150-mA Low-Dropout Linear Regulators* data sheet

12.3 Receiving Notification of Documentation Updates

To receive notification of documentation updates, navigate to the device product folder on ti.com. In the upper right corner, click on *Alert me* to register and receive a weekly digest of any product information that has changed. For change details, review the revision history included in any revised document.

12.4 支持资源

TI E2E™ 支持论坛是工程师的重要参考资料，可直接从专家获得快速、经过验证的解答和设计帮助。搜索现有解答或提出自己的问题可获得所需的快速设计帮助。

链接的内容由各个贡献者“按原样”提供。这些内容并不构成 TI 技术规范，并且不一定反映 TI 的观点；请参阅 TI 的《使用条款》。

12.5 Trademarks

TI E2E™ is a trademark of Texas Instruments.
所有商标均为其各自所有者的财产。

12.6 静电放电警告

静电放电 (ESD) 会损坏这个集成电路。德州仪器 (TI) 建议通过适当的预防措施处理所有集成电路。如果不遵守正确的处理和安装程序，可能会损坏集成电路。

ESD 的损坏小至导致微小的性能降级，大至整个器件故障。精密的集成电路可能更容易受到损坏，这是因为非常细微的参数更改都可能会导致器件与其发布的规格不相符。

12.7 术语表

TI 术语表　　本术语表列出并解释了术语、首字母缩略词和定义。

13 Mechanical, Packaging, and Orderable Information

The following pages include mechanical packaging and orderable information. This information is the most current data available for the designated devices. This data is subject to change without notice and revision of this document. For browser-based versions of this data sheet, refer to the left-hand navigation.

PACKAGE OUTLINE

D0008B

SOIC - 1.75 mm max height

SMALL OUTLINE INTEGRATED CIRCUIT

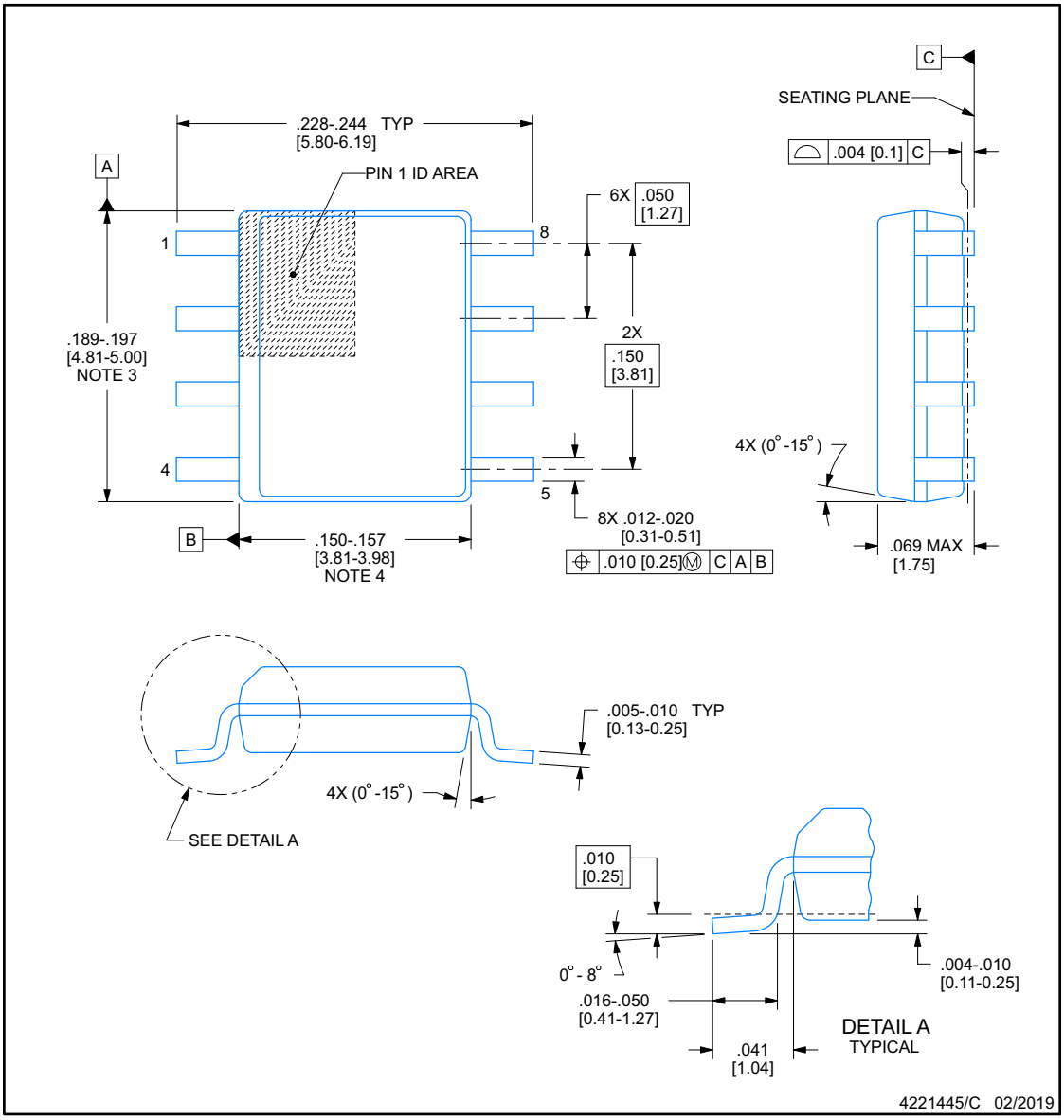

NOTES:

1. Linear dimensions are in inches [millimeters]. Dimensions in parenthesis are for reference only. Controlling dimensions are in inches. Dimensioning and tolerancing per ASME Y14.5M.
2. This drawing is subject to change without notice.
3. This dimension does not include mold flash, protrusions, or gate burrs. Mold flash, protrusions, or gate burrs shall not exceed .006 [0.15], per side.
4. This dimension does not include interlead flash.
5. Reference JEDEC registration MS-012, variation AA.

TEXAS INSTRUMENTS
www.ti.com

Copyright © 2023 Texas Instruments Incorporated

EXAMPLE BOARD LAYOUT

D0008B

SOIC - 1.75 mm max height

SMALL OUTLINE INTEGRATED CIRCUIT

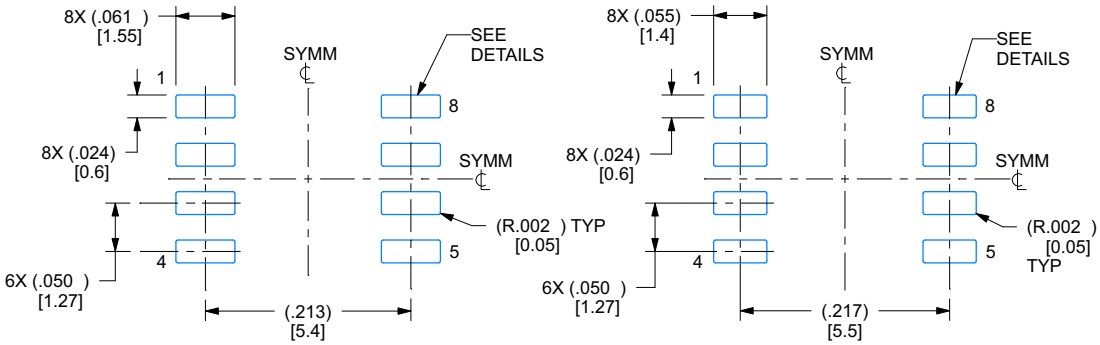

IPC-7351 NOMINAL
.150 [3.85] CLEARANCE / CREEPAGE

HV / ISOLATION OPTION
.162 [4.1] CLEARANCE / CREEPAGE

LAND PATTERN EXAMPLE
EXPOSED METAL SHOWN
SCALE:6X

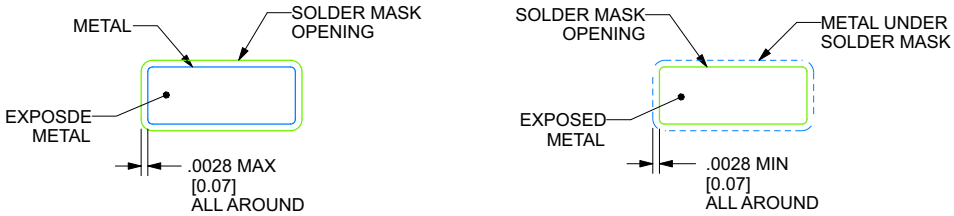

NON SOLDER MASK
DEFINED

SOLDER MASK
DEFINED

SOLDER MASK DETAILS

4221445/C 02/2019

NOTES: (continued)

6. Publication IPC-7351 may have alternate designs.
7. Solder mask tolerances between and around signal pads can vary based on board fabrication site.

Copyright © 2023 Texas Instruments Incorporated

EXAMPLE STENCIL DESIGN

D0008B **SOIC - 1.75 mm max height**

SMALL OUTLINE INTEGRATED CIRCUIT

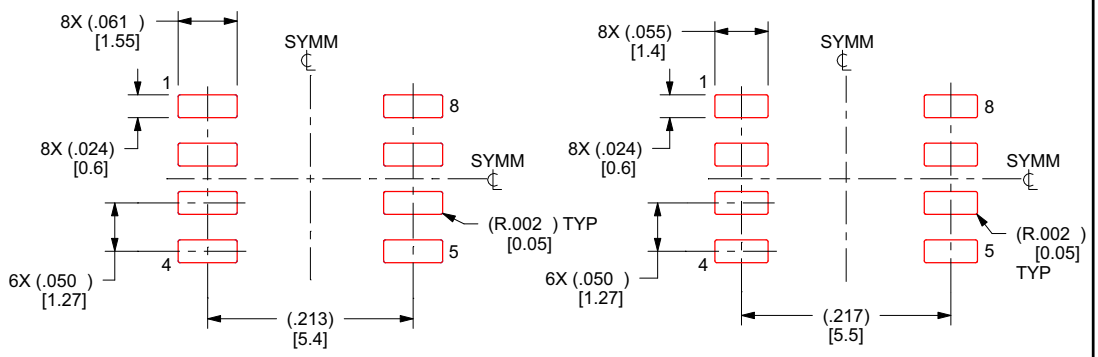

IPC-7351 NOMINAL
.150 [3.85] CLEARANCE / CREEPAGE

HV / ISOLATION OPTION
.162 [4.1] CLEARANCE / CREEPAGE

SOLDER PASTE EXAMPLE
BASED ON .005 INCH [0.127 MM] THICK STENCIL
SCALE:6X

4221445/C 02/2019

NOTES: (continued)

8. Laser cutting apertures with trapezoidal walls and rounded corners may offer better paste release. IPC-7525 may have alternate design recommendations.
9. Board assembly site may have different recommendations for stencil design.

Copyright © 2023 Texas Instruments Incorporated

PACKAGING INFORMATION

Orderable part number	Status (1)	Material type (2)	Package | Pins	Package qty | Carrier	RoHS (3)	Lead finish/ Ball material (4)	MSL rating/ Peak reflow (5)	Op temp (°C)	Part marking (6)
ISO6720BDR	Active	Production	SOIC (D) | 8	3000 | LARGE T&R	Yes	NIPDAU	Level-2-260C-1 YEAR	-40 to 125	6720B
ISO6720BDR.A	Active	Production	SOIC (D) | 8	3000 | LARGE T&R	Yes	NIPDAU	Level-2-260C-1 YEAR	-40 to 125	6720B
ISO6720FBDR	Active	Production	SOIC (D) | 8	3000 | LARGE T&R	Yes	NIPDAU	Level-2-260C-1 YEAR	-40 to 125	6720FB
ISO6720FBDR.A	Active	Production	SOIC (D) | 8	3000 | LARGE T&R	Yes	NIPDAU	Level-2-260C-1 YEAR	-40 to 125	6720FB
ISO6721BDR	Active	Production	SOIC (D) | 8	3000 | LARGE T&R	Yes	NIPDAU	Level-2-260C-1 YEAR	-40 to 125	6721B
ISO6721BDR.A	Active	Production	SOIC (D) | 8	3000 | LARGE T&R	Yes	NIPDAU	Level-2-260C-1 YEAR	-40 to 125	6721B
ISO6721FBDR	Active	Production	SOIC (D) | 8	3000 | LARGE T&R	Yes	NIPDAU	Level-2-260C-1 YEAR	-40 to 125	6721FB
ISO6721FBDR.A	Active	Production	SOIC (D) | 8	3000 | LARGE T&R	Yes	NIPDAU	Level-2-260C-1 YEAR	-40 to 125	6721FB
ISO6721RBDR	Active	Production	SOIC (D) | 8	3000 | LARGE T&R	Yes	NIPDAU	Level-2-260C-1 YEAR	-40 to 125	21RB
ISO6721RBDR.A	Active	Production	SOIC (D) | 8	3000 | LARGE T&R	Yes	NIPDAU	Level-2-260C-1 YEAR	-40 to 125	21RB
ISO6721RFBDR	Active	Production	SOIC (D) | 8	3000 | LARGE T&R	Yes	NIPDAU	Level-2-260C-1 YEAR	-40 to 125	21RFB
ISO6721RFBDR.A	Active	Production	SOIC (D) | 8	3000 | LARGE T&R	Yes	NIPDAU	Level-2-260C-1 YEAR	-40 to 125	21RFB
ISO6721RFBDRG4	Active	Production	SOIC (D) | 8	3000 | LARGE T&R	Yes	NIPDAU	Level-2-260C-1 YEAR	-40 to 125	21RFB
ISO6721RFBDRG4.A	Active	Production	SOIC (D) | 8	3000 | LARGE T&R	Yes	NIPDAU	Level-2-260C-1 YEAR	-40 to 125	21RFB

(1) **Status:** For more details on status, see our product life cycle.

(2) **Material type:** When designated, preproduction parts are prototypes/experimental devices, and are not yet approved or released for full production. Testing and final process, including without limitation quality assurance, reliability performance testing, and/or process qualification, may not yet be complete, and this item is subject to further changes or possible discontinuation. If available for ordering, purchases will be subject to an additional waiver at checkout, and are intended for early internal evaluation purposes only. These items are sold without warranties of any kind.

(3) **RoHS values:** Yes, No, RoHS Exempt. See the TI RoHS Statement for additional information and value definition.

(4) **Lead finish/Ball material:** Parts may have multiple material finish options. Finish options are separated by a vertical ruled line. Lead finish/Ball material values may wrap to two lines if the finish value exceeds the maximum column width.

(5) **MSL rating/Peak reflow:** The moisture sensitivity level ratings and peak solder (reflow) temperatures. In the event that a part has multiple moisture sensitivity ratings, only the lowest level per JEDEC standards is shown. Refer to the shipping label for the actual reflow temperature that will be used to mount the part to the printed circuit board.

(6) **Part marking:** There may be an additional marking, which relates to the logo, the lot trace code information, or the environmental category of the part.

Multiple part markings will be inside parentheses. Only one part marking contained in parentheses and separated by a "~" will appear on a part. If a line is indented then it is a continuation of the previous line and the two combined represent the entire part marking for that device.

Important Information and Disclaimer: The information provided on this page represents TI's knowledge and belief as of the date that it is provided. TI bases its knowledge and belief on information provided by third parties, and makes no representation or warranty as to the accuracy of such information. Efforts are underway to better integrate information from third parties. TI has taken and continues to take reasonable steps to provide representative and accurate information but may not have conducted destructive testing or chemical analysis on incoming materials and chemicals. TI and TI suppliers consider certain information to be proprietary, and thus CAS numbers and other limited information may not be available for release.

In no event shall TI's liability arising out of such information exceed the total purchase price of the TI part(s) at issue in this document sold by TI to Customer on an annual basis.

OTHER QUALIFIED VERSIONS OF ISO6720, ISO6721, ISO6721R :

- Automotive : ISO6720-Q1, ISO6721-Q1, ISO6721R-Q1

NOTE: Qualified Version Definitions:

- Automotive - Q100 devices qualified for high-reliability automotive applications targeting zero defects

TAPE AND REEL INFORMATION

REEL DIMENSIONS

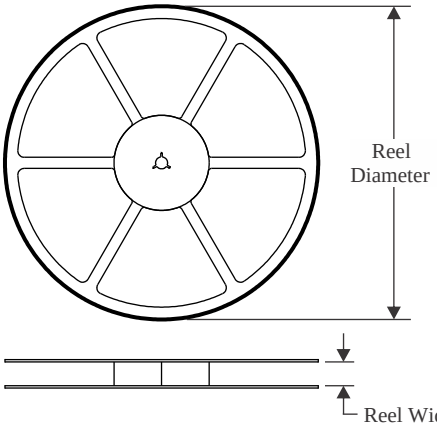

TAPE DIMENSIONS

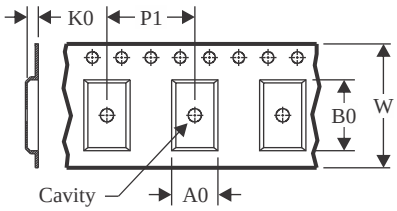

A0	Dimension designed to accommodate the component width
B0	Dimension designed to accommodate the component length
K0	Dimension designed to accommodate the component thickness
W	Overall width of the carrier tape
P1	Pitch between successive cavity centers

QUADRANT ASSIGNMENTS FOR PIN 1 ORIENTATION IN TAPE

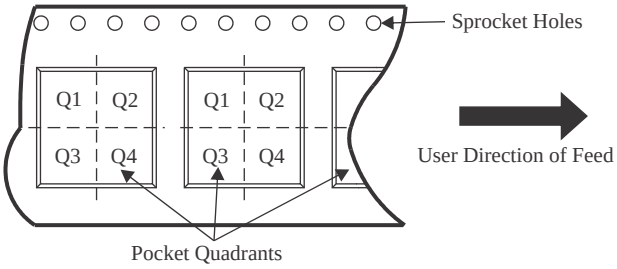

*All dimensions are nominal

Device	Package Type	Package Drawing	Pins	SPQ	Reel Diameter (mm)	Reel Width W1 (mm)	A0 (mm)	B0 (mm)	K0 (mm)	P1 (mm)	W (mm)	Pin1 Quadrant
ISO6720BDR	SOIC	D	8	3000	330.0	12.4	6.5	5.4	2.0	8.0	12.0	Q1
ISO6720FBDR	SOIC	D	8	3000	330.0	12.4	6.5	5.4	2.0	8.0	12.0	Q1
ISO6721BDR	SOIC	D	8	3000	330.0	12.4	6.5	5.4	2.0	8.0	12.0	Q1
ISO6721BDR	SOIC	D	8	3000	330.0	12.4	6.4	5.2	2.1	8.0	12.0	Q1
ISO6721FBDR	SOIC	D	8	3000	330.0	12.4	6.5	5.4	2.0	8.0	12.0	Q1
ISO6721RBDR	SOIC	D	8	3000	330.0	12.4	6.5	5.4	2.0	8.0	12.0	Q1
ISO6721RBDR	SOIC	D	8	3000	330.0	12.4	6.4	5.2	2.1	8.0	12.0	Q1
ISO6721RFBDR	SOIC	D	8	3000	330.0	12.4	6.5	5.4	2.0	8.0	12.0	Q1
ISO6721RFBDRG4	SOIC	D	8	3000	330.0	12.4	6.5	5.4	2.0	8.0	12.0	Q1
ISO6721RFBDRG4	SOIC	D	8	3000	330.0	12.4	6.4	5.2	2.1	8.0	12.0	Q1

TAPE AND REEL BOX DIMENSIONS

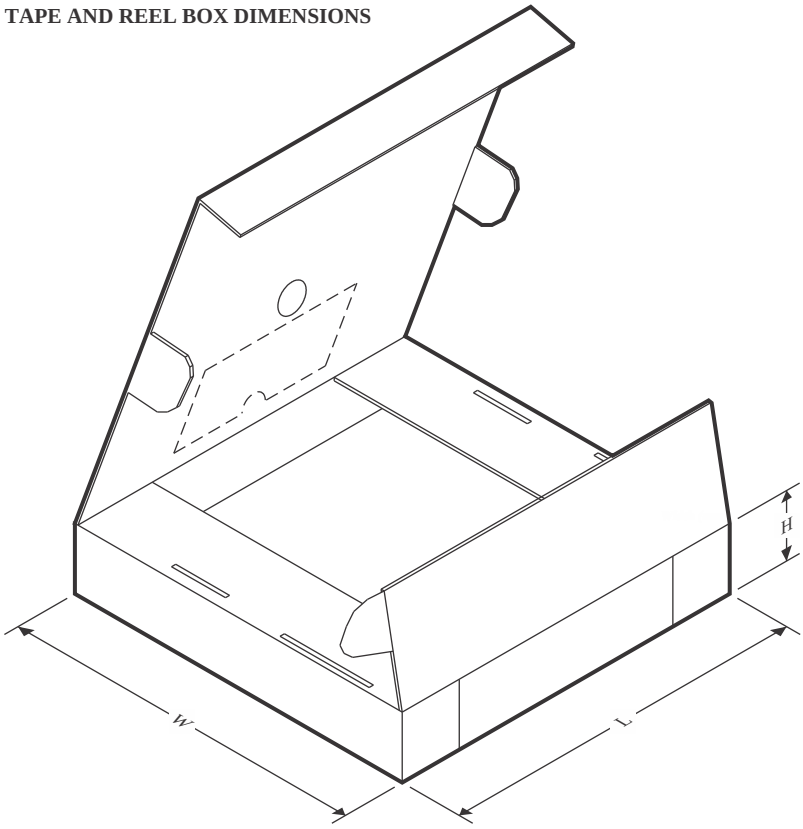

*All dimensions are nominal

Device	Package Type	Package Drawing	Pins	SPQ	Length (mm)	Width (mm)	Height (mm)
ISO6720BDR	SOIC	D	8	3000	356.0	356.0	36.0
ISO6720FBDR	SOIC	D	8	3000	356.0	356.0	36.0
ISO6721BDR	SOIC	D	8	3000	356.0	356.0	36.0
ISO6721BDR	SOIC	D	8	3000	353.0	353.0	32.0
ISO6721FBDR	SOIC	D	8	3000	356.0	356.0	36.0
ISO6721RBDR	SOIC	D	8	3000	356.0	356.0	36.0
ISO6721RBDR	SOIC	D	8	3000	353.0	353.0	32.0
ISO6721RFBDR	SOIC	D	8	3000	356.0	356.0	36.0
ISO6721RFBDRG4	SOIC	D	8	3000	356.0	356.0	36.0
ISO6721RFBDRG4	SOIC	D	8	3000	353.0	353.0	32.0

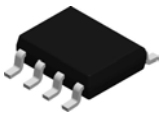

PACKAGE OUTLINE

D0008A

SOIC - 1.75 mm max height

SMALL OUTLINE INTEGRATED CIRCUIT

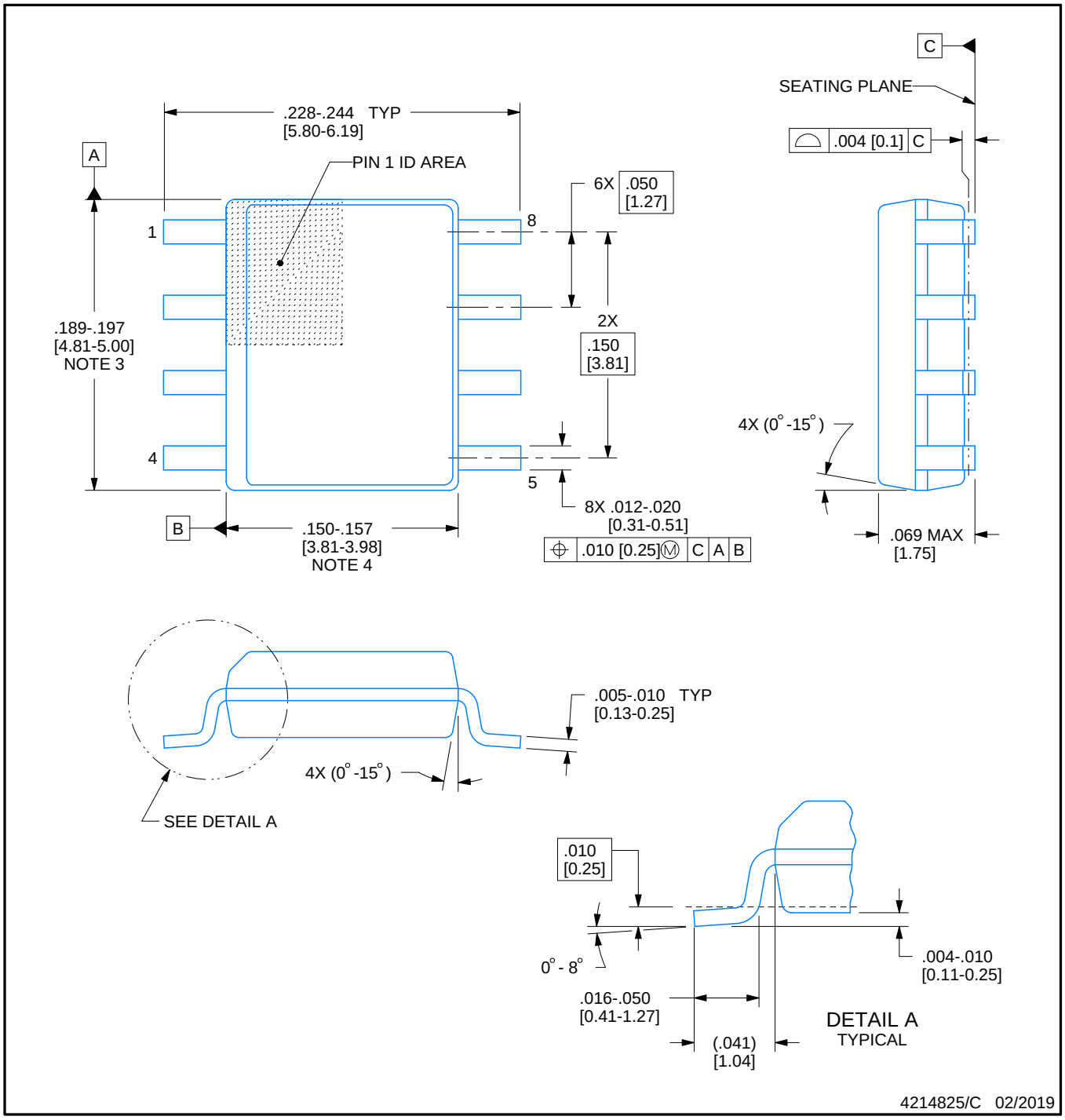

NOTES:

1. Linear dimensions are in inches [millimeters]. Dimensions in parenthesis are for reference only. Controlling dimensions are in inches. Dimensioning and tolerancing per ASME Y14.5M.
2. This drawing is subject to change without notice.
3. This dimension does not include mold flash, protrusions, or gate burrs. Mold flash, protrusions, or gate burrs shall not exceed .006 [0.15] per side.
4. This dimension does not include interlead flash.
5. Reference JEDEC registration MS-012, variation AA.

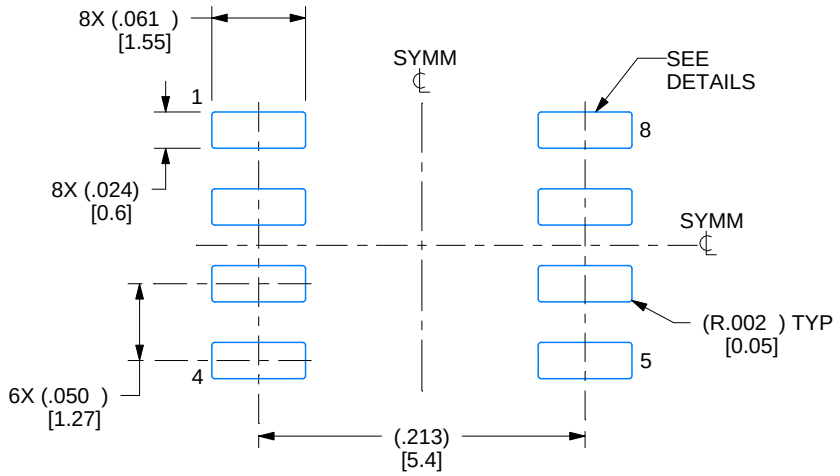

LAND PATTERN EXAMPLE
EXPOSED METAL SHOWN
SCALE:8X

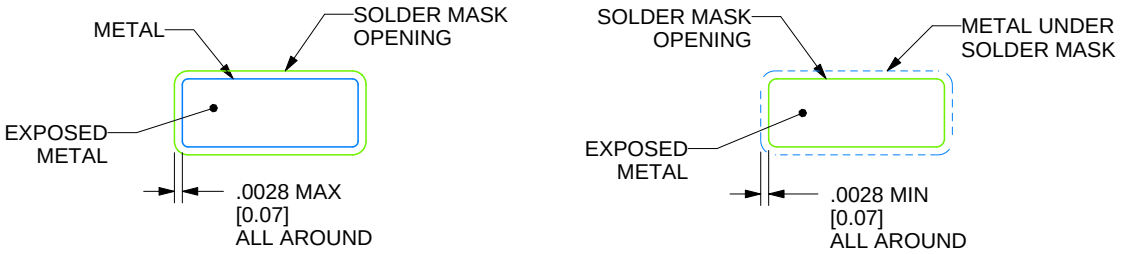

SOLDER MASK DETAILS

4214825/C 02/2019

NOTES: (continued)

6. Publication IPC-7351 may have alternate designs.
7. Solder mask tolerances between and around signal pads can vary based on board fabrication site.

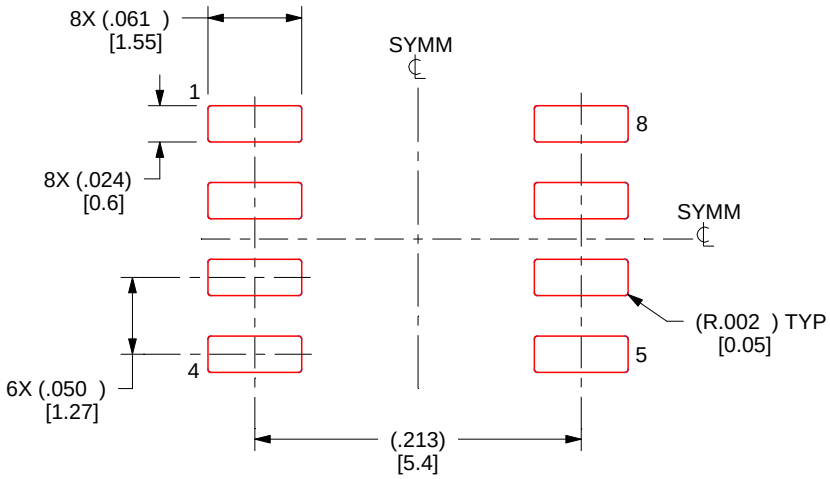

SOLDER PASTE EXAMPLE
BASED ON .005 INCH [0.125 MM] THICK STENCIL
SCALE:8X

4214825/C 02/2019

NOTES: (continued)

8. Laser cutting apertures with trapezoidal walls and rounded corners may offer better paste release. IPC-7525 may have alternate design recommendations.
9. Board assembly site may have different recommendations for stencil design.

重要通知和免责声明

TI“按原样”提供技术和可靠性数据（包括数据表）、设计资源（包括参考设计）、应用或其他设计建议、网络工具、安全信息和其他资源，不保证没有瑕疵且不做出任何明示或暗示的担保，包括但不限于对适销性、与某特定用途的适用性或不侵犯任何第三方知识产权的暗示担保。

这些资源可供使用 TI 产品进行设计的熟练开发人员使用。您将自行承担以下全部责任：(1) 针对您的应用选择合适的 TI 产品，(2) 设计、验证并测试您的应用，(3) 确保您的应用满足相应标准以及任何其他安全、安保法规或其他要求。

这些资源如有变更，恕不另行通知。TI 授权您仅可将这些资源用于研发本资源所述的 TI 产品的相关应用。严禁以其他方式对这些资源进行复制或展示。您无权使用任何其他 TI 知识产权或任何第三方知识产权。对于因您对这些资源的使用而对 TI 及其代表造成的任何索赔、损害、成本、损失和债务，您将全额赔偿，TI 对此概不负责。

TI 提供的产品受 TI 销售条款)、TI 通用质量指南 或 ti.com 上其他适用条款或 TI 产品随附的其他适用条款的约束。TI 提供这些资源并不会扩展或以其他方式更改 TI 针对 TI 产品发布的适用的担保或担保免责声明。 除非德州仪器 (TI) 明确将某产品指定为定制产品或客户特定产品，否则其产品均为按确定价格收入目录的标准通用器件。

TI 反对并拒绝您可能提出的任何其他或不同的条款。

版权所有 © 2026，德州仪器 (TI) 公司

最后更新日期：2025 年 10 月