DRV8308 无刷直流电机控制器

1 特性

- 三相无刷直流电机控制器
  - 具有可编程增益和滤波器的数字闭环速度控制
- 通过 10 至 130mA 可配置栅极驱动器驱动 6 个 N 沟道 MOSFET
- 通过霍尔传感器实现换向
  - 时序可提前/延迟
  - 120° 或 180°正弦电流控制
  - 通过单输入控制电机转速
- 工作电源电压范围：8.5V 至 32V
- 灵活的配置方法
  - 读取内部非易失性存储器
  - 读取外部 EEPROM
  - 写入串行外设接口 (SPI)
- 可配置的电机限流器
- 针对霍尔传感器的 5V 稳压器
- 低功耗待机模式
- 集成过流、过压和过热保护

2 应用

- 工业泵、风扇和阀门
- 白色家电
- 电动工具和草坪设备
- 打印机

3 说明

DRV8308 采用高级功能和一个简单的输入接口来 控制传感器式无刷直流电机作为前置驱动器，它可在 10mA 至 130mA 范围内配置电流以驱动 6 个外部 N 沟道 MOSFET 的栅极，从而实现优异的开关特性。

3 个电机相位根据霍尔传感器输入进行换向。当电机达到稳定速度后，DRV8308 控制器可仅使用 1 个霍尔传感器将传感器失配导致的抖动降至最少。霍尔信号驱动时序可提前或延迟 0.1% 以优化电源效率。可选 180° 换向模式可驱动通过电机的正弦电流，并最大限度减少可闻噪声和转矩波纹。电机峰值电流可通过调整感测电阻进行控制。

DRV8308 控制器实现了闭环速度控制，能够使电机在较宽的负载转矩范围内以精准的转速运转。此系统会将 FG 走线或霍尔传感器生成的电机速度与 CLKIN 引脚的基准频率相匹配。DRV8308 控制器也可利用占空比命令（通过时钟或寄存器设置实现）来驱动电机开环。

DRV8308 具备多重保护 特性， 增强了系统的稳健性，例如可处理并报告过流、过压、低压和过热等故障。

器件信息(1)

器件型号	封装	封装尺寸（标称值）
DRV8308	VQFN (40)	6.00mm x 6.00mm

(1) 如需了解所有可用封装，请参阅数据表末尾的可订购产品附录。

简化的原理图

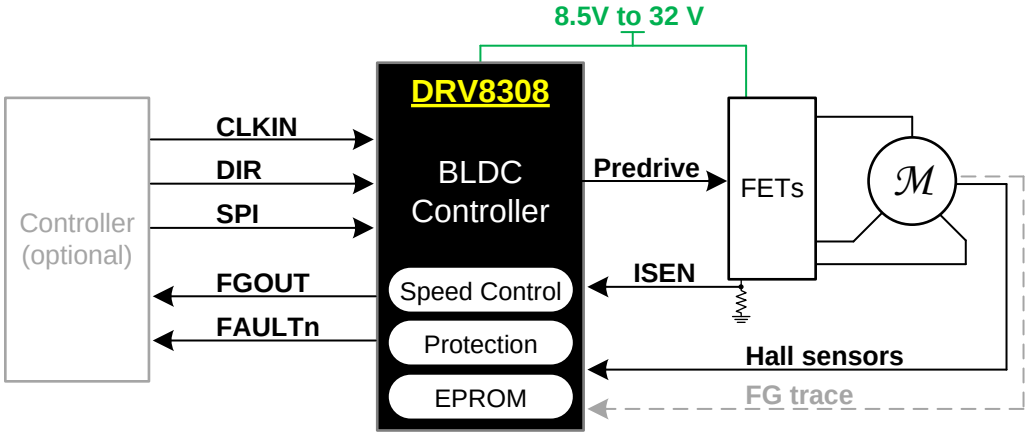

An IMPORTANT NOTICE at the end of this data sheet addresses availability, warranty, changes, use in safety-critical applications, intellectual property matters and other important disclaimers. PRODUCTION DATA.

目录

1 特性 ... 1
2 应用 ... 1
3 说明 ... 1
4 修订历史记录 ... 2
5 **Pin Configurations and Functions** ... 3
6 **Specifications** ... 6
6.1 Absolute Maximum Ratings ... 6
6.2 Handling Ratings ... 6
6.3 Recommended Operating Conditions ... 6
6.4 Thermal Information ... 7
6.5 Electrical Characteristics ... 8
6.6 SPI Timing Requirements ... 10
6.7 Typical Characteristics ... 11
7 **Detailed Description** ... 12
7.1 Overview ... 12
7.2 Functional Block Diagram ... 13
7.3 Feature Description ... 14
7.4 Device Functional Modes ... 30
7.5 Programming ... 35
7.6 Register Map ... 36
8 **Application and Implementation** ... 41
8.1 Application Information ... 41
8.2 Typical Application ... 44
8.3 Do's and Don'ts ... 49
9 **Power Supply Recommendations** ... 50
10 **Layout** ... 50
10.1 Layout Guidelines ... 50
10.2 Layout Example ... 50
11 器件和文档支持 ... 51
11.1 文档支持 ... 51
11.2 接收文档更新通知 ... 51
11.3 社区资源 ... 51
11.4 商标 ... 51
11.5 静电放电警告 ... 51
11.6 Glossary ... 51
12 机械、封装和可订购信息 ... 51

4 修订历史记录

注：之前版本的页码可能与当前版本有所不同。

Changes from Revision A (October 2014) to Revision B — **Page**

- 已删除 从*特性* 部分中删除了锁定转子检测和重启 ... 1
- 已删除 从*说明中删除了锁定转子检测* ... 1
- Deleted Rotor Stall Detection from FAULTn description in the *Pin Functions* ... 4
- Deleted extra notes in the *Thermal Information* table (refer to the *Semiconductor and IC Package Thermal Metrics* application report for this information ... 7
- Deleted RLOCK from tRETRY in the *Electrical Characteristics* ... 9
- Deleted tLOCK from the *Electrical Characteristics* ... 9
- Deleted Locked Rotor Detection from *Overview* ... 12
- Updated direction change behavior in the *Commutation* section ... 17
- Deleted the *Rotor Lockup (RLOCK)* section in the*Protectton Circuits* section ... 29
- Changed the LRTIME bit to reserved in the *Register Description* table ... 39
- Changed the RLOCK bit to reserved in the *Register Description* table ... 40
- 已添加 *接收文档更新通知* 和*社区资源* 部分 ... 51

Changes from Original (February 2014) to Revision A — **Page**

- Added *Handling Rating* table, *Feature Description* section, *Device Functional Modes*, *Application and Implementation* section, *Power Supply Recommendations* section, *Layout* section, *Device and Documentation Support* section, and *Mechanical, Packaging*, and *Orderable Information* section ... 6

Copyright © 2014–2017, Texas Instruments Incorporated

5 Pin Configurations and Functions

RHA Package
40-Pin VQFN With Exposed Thermal Pad
Top View

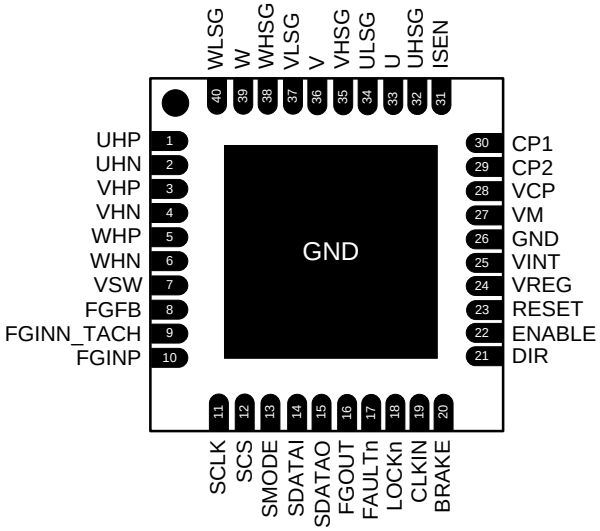

Pin Functions

PIN		I/O(1)	DESCRIPTION	EXTERNAL COMPONENTS OR CONNECTIONS
NAME	NO.			
POWER AND GROUND				
CP1	30	PWR	Charge pump flying capacitor	Connect a 0.1-μF 35-V capacitor between CP1 and CP2
CP2	29	PWR		
GND	26, PPAD	PWR	Ground reference. Pin 26 and the exposed thermal pad are internally connected.	Connect to board GND
VCP	28	PWR	Charge pump storage capacitor	Connect a 1-μF 35-V ceramic capacitor to VM
VINT	25	PWR	Internal 1.8-V core voltage regulator bypass	Bypass to GND with a 1-μF 6.3-V ceramic capacitor
VM	27	PWR	Motor supply voltage	Connect to motor supply voltage. Bypass to GND with a 0.1-μF ceramic capacitor, plus a large electrolytic capacitor (47 μF or larger is recommended), with a voltage rating of 1.5× to 2.5× VM.
VREG	24	PWR	5-V regulator output. Active when ENABLE is active.	Bypass to GND with a 0.1-μF 10-V ceramic capacitor. Can provide 5-V power to Hall sensors.
VSW	7	PWR	Switched VM power output. When ENABLE is active, VM is applied to this pin.	Can be used for powering Hall elements, along with added series resistance.
CONTROL				
BRAKE	20	I	Causes motor to brake. Polarity is programmable. Internal pulldown resistor.	
CLKIN	19	I	The clock input, used in Clock Frequency Mode and Clock PWM Mode. Internal pulldown resistor.	
DIR	21	I	Sets motor rotation direction. Polarity is programmable. Internal pulldown resistor.	

(1) I = input, O = output, OD = open-drain output, I/O = input/output

Copyright © 2014–2017, Texas Instruments Incorporated

Pin Functions (continued)

PIN		I/O[1]	DESCRIPTION	EXTERNAL COMPONENTS OR CONNECTIONS
NAME	NO.			
ENABLE	22	I	Enables and disables motor. Polarity is programmable. Internal pulldown resistor.	
FAULTn	17	OD	Fault indicator – active low when overcurrent, or overtemperature. Open-drain output.	
FGOUT	16	OD	Outputs a TACH signal generated from the FG amplifier or Hall sensors. Open-drain output.	
LOCKn	18	OD	Outputs a signal that indicates the speed loop is locked. Open-drain output.	
RESET	23	I	Active high to reset all internal logic. Internal pulldown resistor.	
SERIAL INTERFACE				
SCLK[2]	11	I/OD	Serial clock	SPI mode: Serial clock input. Data is clocked on rising edges. Internal pulldown resistor. EEPROM mode: Connect to EEPROM CLK. Open-drain output requires external pullup.
SCS[2]	12	I/OD	Serial chip select	SPI mode: Active high enables serial interface operation. Internal pulldown resistor. EEPROM mode: Connect to EEPROM CS. Open-drain output requires external pullup.
SDATAI	14	I	Serial data input	SPI mode: Serial data input. Internal pulldown resistor. EEPROM mode: Serial data input. Connect to EEPROM DO terminal.
SDATAO	15	OD	Serial data output	SPI mode: Serial data output. Open-drain output. EEPROM mode: Connect to EEPROM DI. Open-drain output requires external pullup.
SMODE	13	I	Serial mode	SPI mode: leave open or connect to ground for SPI interface mode. EEPROM mode: Connect to logic high to for EEPROM mode.
POWER STAGE INTERFACE				
ISEN	31	I	Low-side current sense resistor	Connect to low-side current sense resistor
U	33	I	Measures motor phase voltages for V_{FETOCP}	Connect to motor windings
V	36	I		
W	39	I		
UHSG	32	O	High-side FET gate outputs	Connect to high-side 1/2-H N-channel FET gate
VHSG	35	O		
WHSG	38	O		
ULSG	34	O	Low-side FET gate outputs	Connect to low-side 1/2-H N-channel FET gate
VLSG	37	O		
WLSG	40	O		
HALL AND FG INTERFACE				
FGFB	8	O	FG amplifier feedback pin	Connect feedback network to FGIN–
FGINN_TACH	9	I[3]	FG amplifier negative input or TACH input	Connect to FG trace and filter components. When using a TACH with FGSEL= 3, connect a logic-level TACH signal. If unused, connect FGFB to FG–.
FGINP	10	I/O	FG amplifier positive input	Connect to FG trace and filter components on the PCB (if used).

(2) In SPI mode, these pins are inputs; in EEPROM mode, they are open-drain outputs.
(3) When using FG amplifier, this pin is an analog input. If in TACH mode, this is a logic-level input.

Copyright © 2014–2017, Texas Instruments Incorporated

Pin Functions (continued)

PIN		I/O[1]	DESCRIPTION	EXTERNAL COMPONENTS OR CONNECTIONS
NAME	NO.			
UHP	1	I	Hall sensor U positive input	Connect to Hall sensors. Noise filter capacitors may be desirable, connected between the + and – Hall inputs.
UHN	2	I	Hall sensor U negative input	
VHP	3	I	Hall sensor V positive input	
VHN	4	I	Hall sensor V negative input	
WHP	5	I	Hall sensor W positive input	
WHN	6	I	Hall sensor W negative input	

Copyright © 2014–2017, Texas Instruments Incorporated

6 Specifications

6.1 Absolute Maximum Ratings

over operating free-air temperature (unless otherwise noted) (1) (2) (3)

	MIN	MAX	UNIT
Power supply voltage (VM)	–0.3	42	V
Charge pump and high side gate drivers (VCP, UHSG, VHSG, WHSG)	–0.3	50	V
Output pin, low side gate drivers, charge pump flying cap and switched VM power supply voltage (U, V, W, ULSG, VLSG, WLSG, CP1, CP2 VSW)	–0.6	40	V
Internal core voltage regulator (VINT)	–0.3	2	V
Linear voltage regulator output (VREG)	–0.3	5.5	V
Sense current pin (ISEN)	–0.3	2	V
Digital pin voltage range (SCLK, SCS, SMODE, SDATAI, SDATAO, FGOUT, FAULTn, LOCKn, CLKIN, BRAKE, DIR, ENABLE, RESET)	–0.5	5.75	V
Hall sensor input pin voltage (UHP, UHN, VHP, VHN, WHP, WHN, FGFB, FGINN/TACH, FGINP)	0	VREG	V
Continuous total power dissipation	See *Thermal Information*		
Operating junction temperature range, T_J	–40	150	°C

(1) Stresses beyond those listed under *Absolute Maximum Ratings* may cause permanent damage to the device. These are stress ratings only, which do not imply functional operation of the device at these or any other conditions beyond those indicated under *Recommended Operating Conditions*. Exposure to absolute-maximum-rated conditions for extended periods may affect device reliability.
(2) All voltage values are with respect to network ground pin.
(3) Power dissipation and thermal limits must be observed

6.2 Handling Ratings

			MIN	MAX	UNIT
T_{stg}	Storage temperature range		–60	150	°C
$V_{(ESD)}$	Electrostatic discharge	Human body model (HBM), per ANSI/ESDA/JEDEC JS-001, all pins (1)	-4000	4000	V
		Charged device model (CDM), per JEDEC specification JESD22-C101, all pins (2)	-1500	1500	

(1) JEDEC document JEP155 states that 500-V HBM allows safe manufacturing with a standard ESD control process.
(2) JEDEC document JEP157 states that 250-V CDM allows safe manufacturing with a standard ESD control process.

6.3 Recommended Operating Conditions

over operating free-air temperature range (unless otherwise noted)

			MIN	NOM	MAX	UNIT
V_M	Motor power supply voltage range, ENABLE = 1, motor operating (1)		8.5		32	V
V_{MDIS}	Motor power supply voltage range, ENABLE = 0, motor not operating		4.5		35	
I_{VREG}	VREG output current (2)		0		30	mA
I_{VSW}	VSW output current (2)		0		30	
f_{HALL}	Hall sensor input frequency (3)		0		30	kHz
f_{CLKIN}	Frequency on CLKIN	SPDMODE = 00 (Clock Frequency Mode)	0		90	
		SPDMODE = 01 (Clock PWM Mode)	16		50 (4)	

(1) Note that at VM < 12 V, gate drive output voltage tracks VM voltage
(2) Power dissipation and thermal limits must be observed
(3) f_{HALL} of 50 Hz to 6.7 kHz is best
(4) Operational with frequencies above 50 kHz, but resolution is degraded

Copyright © 2014–2017, Texas Instruments Incorporated

6.4 Thermal Information

THERMAL METRIC[1]		DRV8308 RHA (VQFN) 40 PINS	UNIT
$R_{\theta JA}$	Junction-to-ambient thermal resistance	33.2	°C/W
$R_{\theta JC(top)}$	Junction-to-case (top) thermal resistance	23	°C/W
$R_{\theta JB}$	Junction-to-board thermal resistance	8.8	°C/W
ψ_{JT}	Junction-to-top characterization parameter	0.3	°C/W
ψ_{JB}	Junction-to-board characterization parameter	8.8	°C/W
$R_{\theta JC(bot)}$	Junction-to-case (bottom) thermal resistance	2.3	°C/W

(1) For more information about traditional and new thermal metrics, see the *Semiconductor and IC Package Thermal Metrics* application report.

Copyright © 2014–2017, Texas Instruments Incorporated

6.5 Electrical Characteristics

over operating free-air temperature range (unless otherwise noted)

PARAMETER		TEST CONDITIONS	MIN	TYP	MAX	UNIT
VM SUPPLY						
I_{VM}	VM active current	ENABLE = active, VREG and VSW open		12	18	mA
I_{STBY}	VM standby current	ENABLE = inactive			120	µA
V_{RESET}	VM logic reset voltage	VM falling			4.6	V
		VM rising	5			
VREG SUPPLY						
V_{VREG}	Output voltage	I_{OUT} = 1 to 30 mA	4.75	5	5.25	V
I_{VREG}	Output current				30	mA
VSW SUPPLY						
$R_{DS(ON)}$	VSW switch on-resistance	I_{OUT} = 1 to 30 mA		9	20	Ω
I_{VSW}	Output current				30	mA
INTERNAL CLOCK OSCILLATOR						
f_{CLK50}	Internal CLK50 clock frequency			50		MHz
LOGIC-LEVEL INPUTS AND OUTPUTS						
V_{IL}	Low-level input voltage				0.8	V
V_{IH}	High-level input voltage		1.5		5.5	V
I_{IL}	Low-level input current		–50		50	µA
I_{IH}	High-level input current	V_{IN} = 3.3 V, RESET, DIR, BRAKE, CLKIN, SCS, SCLK, SDATAI, SMODE	20		100	µA
		V_{IN} = 3.3 V, ENABLE	6		9	
V_{HYS}	Input hysteresis voltage		0.1	0.3	0.5	V
R_{PD}	Input pulldown resistance	RESET, DIR, BRAKE, CLKIN, SCS, SCLK, SDATAI, SMODE	50	100	150	kΩ
		ENABLE	350		550	
OPEN DRAIN OUTPUTS						
V_{OL}	Low-level output voltage	I_{OUT} = 2.0 mA			0.5	V
I_{OH}	Output leakage current	V_{OUT} = 3.3 V			1	µA
FG AMPLIFIER AND COMPARATOR						
V_{IO}	FG amplifier input offset voltage		–7		7	mV
I_{IB}	FG amplifier input bias current		–1		1	µA
V_{ICM}	FG amplifier input common mode voltage range		1.5		3.5	V
A_V	FG amplifier open loop voltage gain		45			dB
GBW	FG amplifier gain bandwidth product		500			kHz
V_{REF+}	FG comparator positive reference voltage		–20%	V_{VREG} / 2	20%	V
V_{IT+}	FG comparator positive threshold		–20%	V_{VREG} / 1.8	20%	V
V_{IT-}	FG comparator negative threshold		–20%	V_{VREG} / 2	20%	V
HALL SENSOR INPUTS						
V_{HYS}	Hall amplifier hysteresis voltage		15	20	25	mV
ΔV_{HYS}	Hall amplifier hysteresis difference	Between U, V, W	–5		5	mV
V_{ID}	Hall amplifier input differential		50			mV
V_{CM}	Hall amplifier input common mode voltage range		1.5		3.5	V
I_{IN}	Input leakage current	H_x+ = H_x-	–10		10	µA
t_{HDEG}	Hall deglitch time			20		µs

Copyright © 2014–2017, Texas Instruments Incorporated

Electrical Characteristics (continued)

over operating free-air temperature range (unless otherwise noted)

PARAMETER		TEST CONDITIONS	MIN	TYP	MAX	UNIT
MOSFET DRIVERS						
V_{OUTH}	High-side gate drive output voltage	I_O = 100 µA, VM ≥ 12V		VM + 10		V
V_{OUTL}	Low-side gate drive output voltage	I_O = 100 µA		10		V
I_{OUT}	Peak gate drive current	IDRIVE = 000		10		mA
		IDRIVE = 001		20		
		IDRIVE = 010		30		
		IDRIVE = 011		50		
		IDRIVE = 100		90		
		IDRIVE = 101		100		
		IDRIVE = 110		110		
		IDRIVE = 111		130		
CYCLE-BY-CYCLE CURRENT LIMITER						
$V_{LIMITER}$	Voltage limit across R_{ISENSE} for the current limiter		0.225	0.25	0.275	V
t_{BLANK}	Time that $V_{LIMITER}$ is ignored, from the start of the PWM cycle	OCPDEG = 00		2		µs
		OCPDEG = 01		3		
		OCPDEG = 10		3.75		
		OCPDEG = 11		6		
PROTECTION CIRCUITS						
$V_{SENSEOCP}$	Voltage limit across R_{ISENSE} for overcurrent protection		1.7	1.8	1.9	V
V_{FETOCP}	Voltage limit across each external FET's drain to source for overcurrent protection	OCPTH = 00	200	250	400	mV
		OCPTH = 01	400	500	600	
		OCPTH = 10	600	750	850	
		OCPTH = 11	850	1000	1200	
t_{OCP}	Deglitch time for $V_{SENSEOCP}$ or V_{FETOCP} to trigger	OCPDEG = 00		1.6		µs
		OCPDEG = 01		2.3		
		OCPDEG = 10		3		
		OCPDEG = 11		5		
V_{UVLO}	VM undervoltage lockout	VM rising		8		V
		VM falling		7.8		
V_{OVLO}	VM overvoltage lockout	VM rising, OVTH = 0	32	34.5	36	V
		VM rising, OVTH = 1		28	29	
t_{RETRY}	Fault retry time after OTS	RETRY = 1		5		s
T_{TSD}	Thermal shutdown die temperature		150	160		°C
V_{CPFAIL}	VCP failure threshold (CPFAIL bit)			VM + 3		V

Copyright © 2014–2017, Texas Instruments Incorporated

6.6 SPI Timing Requirements

T_A = 25°C, over recommended operating conditions unless otherwise noted (1)

NUMBER (2)			MIN	MAX	UNIT
1	t_{CYC}	Clock cycle time	62		ns
2	t_{CLKH}	Clock high time	25		
3	t_{CLKL}	Clock low time	25		
4	$t_{SU(SDATI)}$	Setup time, SDATI to SCLK	5		
5	$t_{H(SDATI)}$	Hold time, SDATI to SCLK	1		
6	$t_{SU(SCS)}$	Setup time, SCS to SCLK	5		
7	$t_{H(SCS)}$	Hold time, SCS to SCLK	1		
8	$t_{L(SCS)}$	Inactive time, SCS (between writes)	100		
9	$t_{D(SDATO)}$	Delay time, SCLK to SDATO (during read)		10	
	t_{AWAKE}	Wake time (ENABLE active to high-side gate drive enabled)		1	ms
	t_{SPI}	Delay from power-up or RESET low until serial interface functional		10	µs

(1) SMODE = Low
(2) These numbers refer to the corresponding number in Figure 1

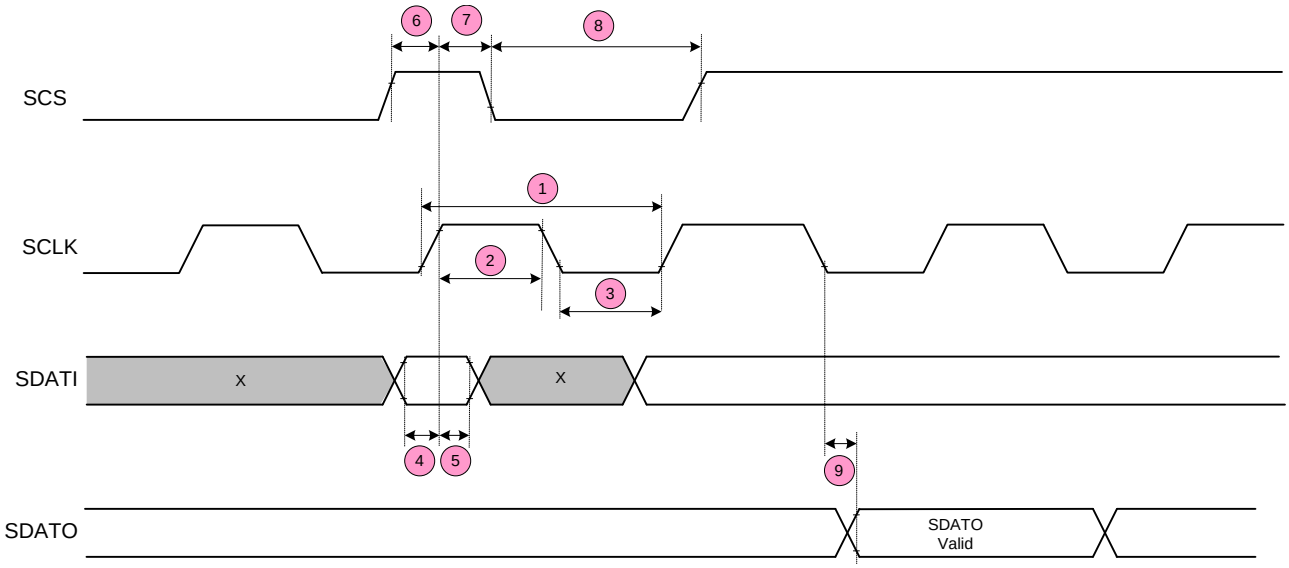

Figure 1. SPI Timing Requirements

Copyright © 2014–2017, Texas Instruments Incorporated

6.7 Typical Characteristics

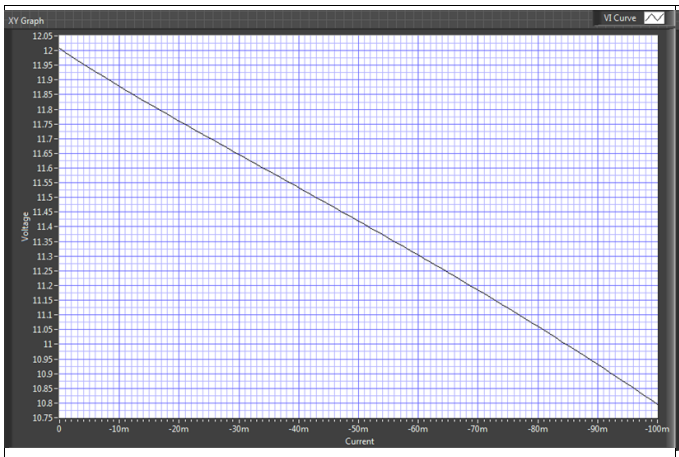

Figure 2. VSW vs Current with VM = 12V

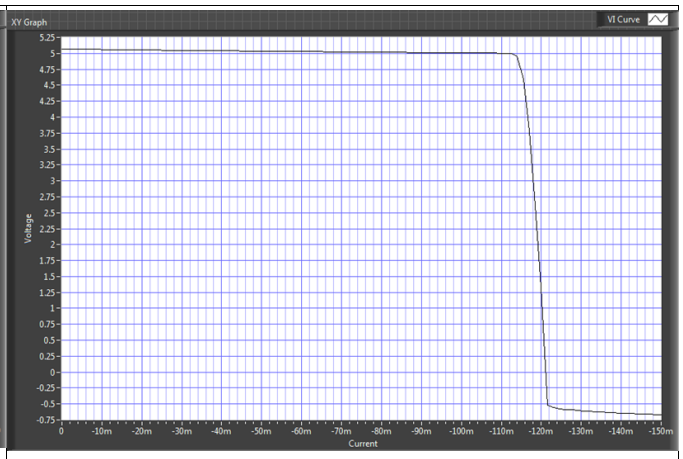

Figure 3. VREG vs Current with VM = 12V

Copyright © 2014–2017, Texas Instruments Incorporated

7 Detailed Description

7.1 Overview

The DRV8308 device controls 3-phase brushless DC motors using a speed and direction input interface and Hall signals from the motor. The device drives N-channel MOSFETs with 10-V V_{GS}, and a configurable gate drive current of 10 to 130 mA.

There are three modes of speed input: clock frequency, clock duty cycle (pulse-width modulation), and an internal register that specifies duty cycle. In the Clock Frequency Mode, the device's digital speed control system matches motor speed with the input clock's frequency. Motor speed is either determined from the Halls sensors or signal on the FG input, which can be generated from a board trace underneath the motor that senses magnetic reluctance. The speed control system offers digital tuning of pole and zero frequencies and integrator gain. When properly tuned, the DRV8308 can drive motors with < 0.1% cycle jitter and fast torque compensation for varying loads. The duty cycle speed modes operate in open-loop without speed control.

When the DRV8308 device powers up, the configuration registers are set from either the one-time programmable (OTP) non-volatile memory, or from an external EEPROM (depending on the SMODE pin). After power-up, registers can be set in realtime over SPI, and the OTP memory can be permanently written once.

When the DRV8308 device begins spinning a motor, it initially uses all three Hall sensor phases to commutate. After a constant speed is reached, the LOCKn pin is pulled low and only one Hall sensor becomes used; this feature reduces jitter by eliminating the error caused by non-ideal Hall device placement and matching. Also at this time, commutation transitions to sine wave current drive (if enabled), which minimizes acoustic noise and torque ripple. Commutation timing can be tuned using the ADVANCE register for optimal performance and power efficiency.

Numerous protection circuits prevent system components from being damaged during adverse conditions. Monitored aspects include motor voltage and current, gate drive voltage and current, and device temperature . When a fault occurs, the DRV8308 device stops driving and pulls FAULTn low, in order to prevent FET damage and motor overheating.

The DRV8308 device is packaged in a compact 6 × 6-mm, 40-pin QFN with a 0.5-mm pin pitch, and operates through an industrial ambient temperature range of –40°C to 85°C.

Copyright © 2014–2017, Texas Instruments Incorporated

7.2 Functional Block Diagram

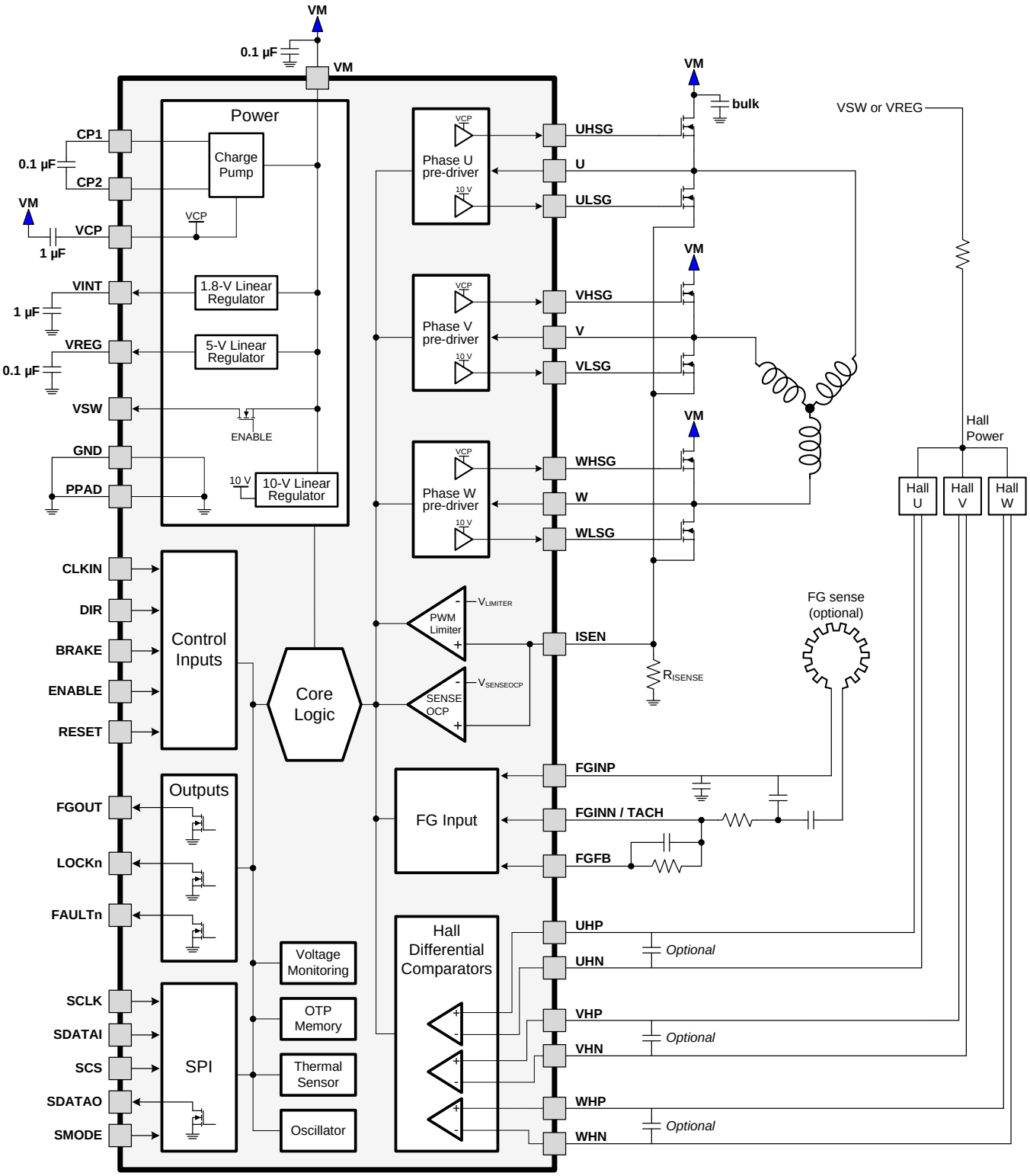

7.3 Feature Description

7.3.1 Hall Comparators

Three comparators are provided to process the raw signals from Hall effect transducers to commutate the motor. The Hall amplifiers sense zero crossings of the differential inputs and pass the information to digital logic.

The Hall amplifiers have hysteresis, and their detect threshold is centered at 0. Note, hysteresis is defined as shown in Figure 4:

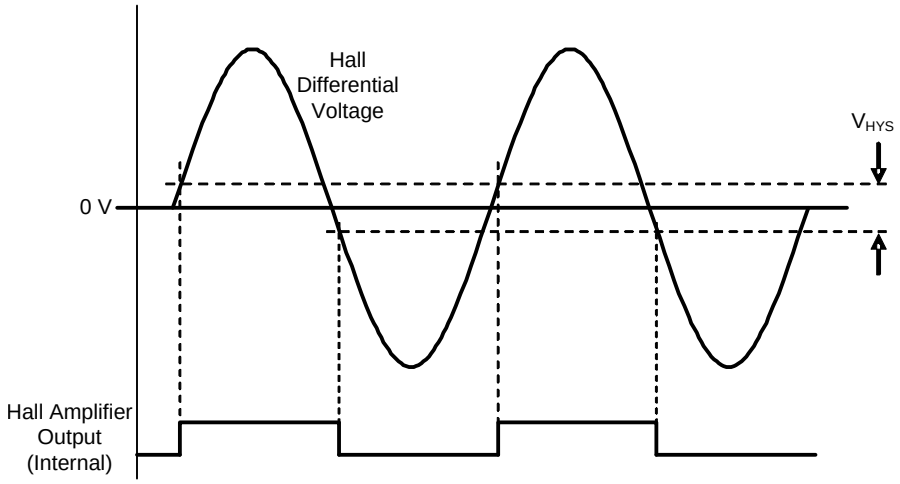

Figure 4. Hall Amplifier Hysteresis

In addition to the hysteresis, the Hall inputs are deglitched with a circuit that ignores any extra Hall transitions for a period of 20 µs after sensing a valid transition. This prevents PWM noise from being coupled into the Hall inputs, which can result in erroneous commutation.

If excessive noise is still coupled into the Hall comparator inputs, it may be necessary to add capacitors between the + and – inputs of the Hall comparators, and (or) between the input or inputs and ground.

The ESD protection circuitry on the Hall inputs implements a diode to VREG. Because of this diode, the voltage on the Hall inputs should not exceed the VREG voltage.

Since VREG is disabled in standby mode (ENABLE inactive), the Hall inputs should not be driven by external voltages in standby mode. If the Hall sensors are powered from VREG or from VSW, this is specified by the DRV8308 device; however, if the Hall sensors are powered externally, they should be disabled if the DRV8308 is put into standby mode. In addition, they should be powered-up before enabling the motor, or an invalid Hall state may cause a delay in motor operation.

7.3.2 FG Amplifier, Comparator, and FG Output

An FG amplifier and comparator provide rotational feedback from an external magnetic reluctance sensor. A diagram of the FG circuit is shown in Figure 5:

Copyright © 2014–2017, Texas Instruments Incorporated

Feature Description (continued)

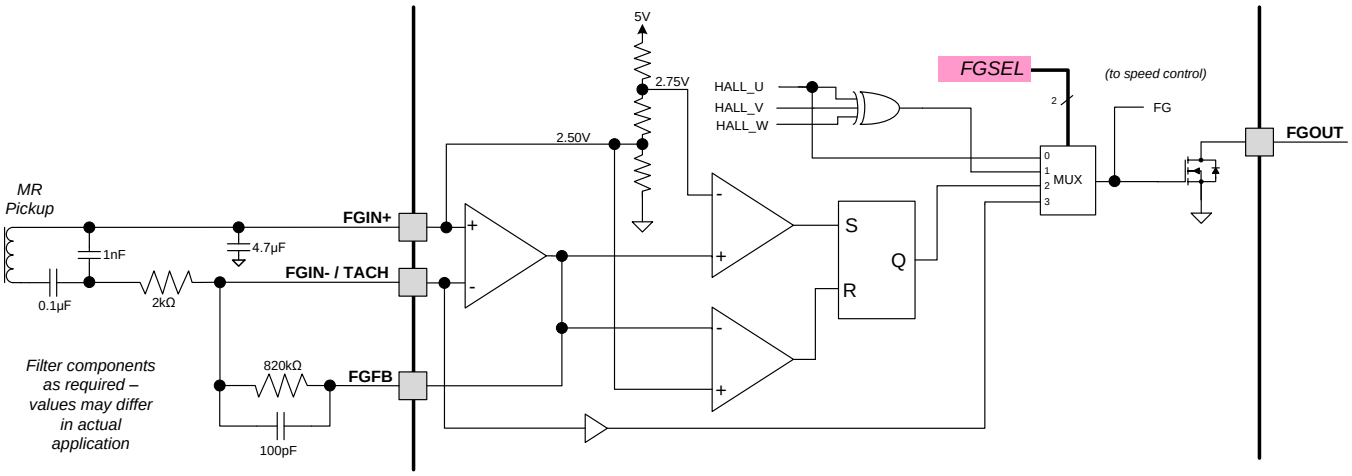

Figure 5. FG Circuit Diagram

The output of the FG amplifier is provided on a pin, so the gain of the FG amplifier can be set by the user. Filter circuits can also be implemented.

Note that the FG signal is also fed back internally to the speed control circuits.

The FG signal that the DRV8308 device uses can be generated from a PCB trace under a motor, or it can be input from a logic-level TACH input, or it can be synthesized from the Hall sensor transitions (selectable by register FGSEL). If generated from Hall transitions, the resulting output can be either an exclusive-or function of the three Hall sensors, or the same as the HALL_U input, as shown in Figure 6.

Selection of FG operating mode is through the FGSEL register bits.

The FGOUT pin is an open-drain output and requires an external pullup resistor to the logic supply.

Copyright © 2014–2017, Texas Instruments Incorporated

Feature Description (continued)

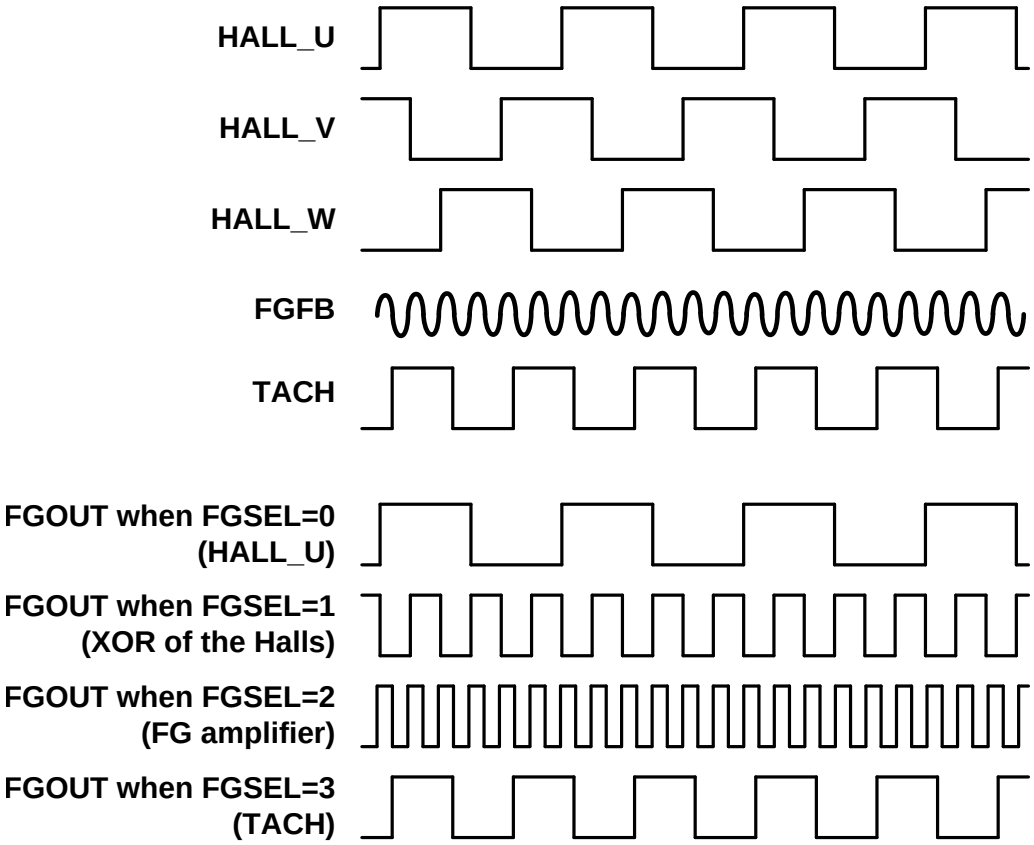

Figure 6.

7.3.3 Enable, Reset, and Clock Generation

The ENABLE pin is used to start and stop motor operation. ENABLE can be programmed to be active high or active low, depending on the state of the ENPOL bit; if ENPOL = 0, ENABLE is active high. If ENPOL = 1, the ENABLE pin is active low.

The polarity of ENABLE cannot be modified during operation through register writes; it is controlled only by the contents of the ENPOL bit in OTP memory.

When ENABLE is active, operation of the motor is enabled. When ENABLE is made inactive, the speed control loop is reset, and the motor either brakes or coasts depending on the state of the BRKMOD bit. After motor rotation has stopped (when no transitions occur on the FGOUT pin for a period of 1 s), the DRV8308 device enters a low-power standby state. In the standby state, the motor driver circuitry is disabled (all gate drive outputs are driven low, so the FET outputs are high-impedance), the gate drive regulator and charge pump are disabled, the VREG regulator and VSW power switch are disabled, and all analog circuitry is placed into a low power state. The digital circuitry in the device still operates in standby mode.

All internal logic is reset in three different ways:

1. Upon device power-up.
2. When VM drops below V_{RESET}.
3. When the RESET pin is high while ENABLE is active.

If RESET is high while ENABLE is inactive, then the registers read as 1. If the RESET pin is not needed, it can be connected to GND. The RESET input is deglitched with a 10-µs timer on assertion and deassertion.

An internal clock generator provides all timing for the DRV8308 device. The master oscillator runs at 100 MHz. This clock is divided to a nominal 50-MHz frequency that clocks the remainder of the digital logic.

Copyright © 2014–2017, Texas Instruments Incorporated

Feature Description (continued)

7.3.4 Commutation

For 3-phase brushless DC motors, rotor position feedback is provided from Hall effect transducers mounted on the motor. These transducers provide three overlapping signals, each 60° apart. The windings are energized in accordance with the signals from the Hall sensors to cause the motor to move.

In addition to the Hall sensor inputs, commutation is affected by a direction control, which alters the direction of motion by reversing the commutation sequence. Control of commutation direction is by the DIRPOL register bit as well as the DIR input pin. The DIRPOL register bit is combined with the pin with an exclusive-OR function as follows:

Table 1. Direction Behavior

DIR PIN	DIRPOL REGISTER BIT	RESULTING DIR FOR COMMUTATION
0	0	0
0	1	1
1	0	1
1	1	0

If the commanded direction is changed while the motor is still spinning, this may cause excessive current flow in the output stage.

The DRV8308 device supports three commutation modes: standard 120° commutation using three Hall sensors, 120° commutation using a single Hall sensor, and 180° sine-wave-drive commutation.

In standard 120° commutation, mis-positioning of the Hall sensors can cause motor noise, vibration, and torque ripple. 120° commutation using a single Hall sensor (single-Hall commutation) can improve motor torque ripple and vibration because it relies on only one Hall edge for timing.

180° sine-wave-drive commutation is even more advanced, and excites the windings with a waveform that delivers nearly sinusoidal current to each winding.

7.3.4.1 120° 3-Hall Commutation

In standard 120° commutation, the motor phases are energized using simple combination logic based on all three Hall sensor inputs. Standard 120° commutation is in accordance with Table 2, Figure 7, and Figure 8:

Table 2. Standard 120° Commutation(1)

STATE	HALL INPUTS						PRE-DRIVE OUTPUTS					
	DIR = 1			DIR = 0			PHASE U		PHASE V		PHASE W	
	U_H	V_H	W_H	U_H	V_H	W_H	U_HSGATE	U_LSGATE	V_HSGATE	V_LSGATE	W_HSGATE	W_LSGATE
1	L	L	H	H	H	L	L	L	PWM	L / !PWM(2)	L	H
2	L	H	H	H	L	L	PWM	L / !PWM(2)	L	L	L	H
3	L	H	L	H	L	H	PWM	L / !PWM(2)	L	H	L	L
4	H	H	L	L	L	H	L	L	L	H	PWM	L / !PWM(2)
5	H	L	L	L	H	H	L	H	L	L	PWM	L / !PWM(2)
6	H	L	H	L	H	L	L	H	PWM	L / !PWM(2)	L	L
1X	H	H	H	L	L	L	L	L	L	L	L	L
2X	L	L	L	H	H	H	L	L	L	L	L	L

(1) Hall sensor is "H" if the positive input pin voltage is higher than the negative input pin voltage. States 1X and 2X are illegal input combinations.
(2) During states where the phase is driven with a PWM signal, using asynchronous rectification, the LS gate is held off (L); using synchronous rectification, the LS gate is driven with the inverse of the HS gate.

Copyright © 2014–2017, Texas Instruments Incorporated

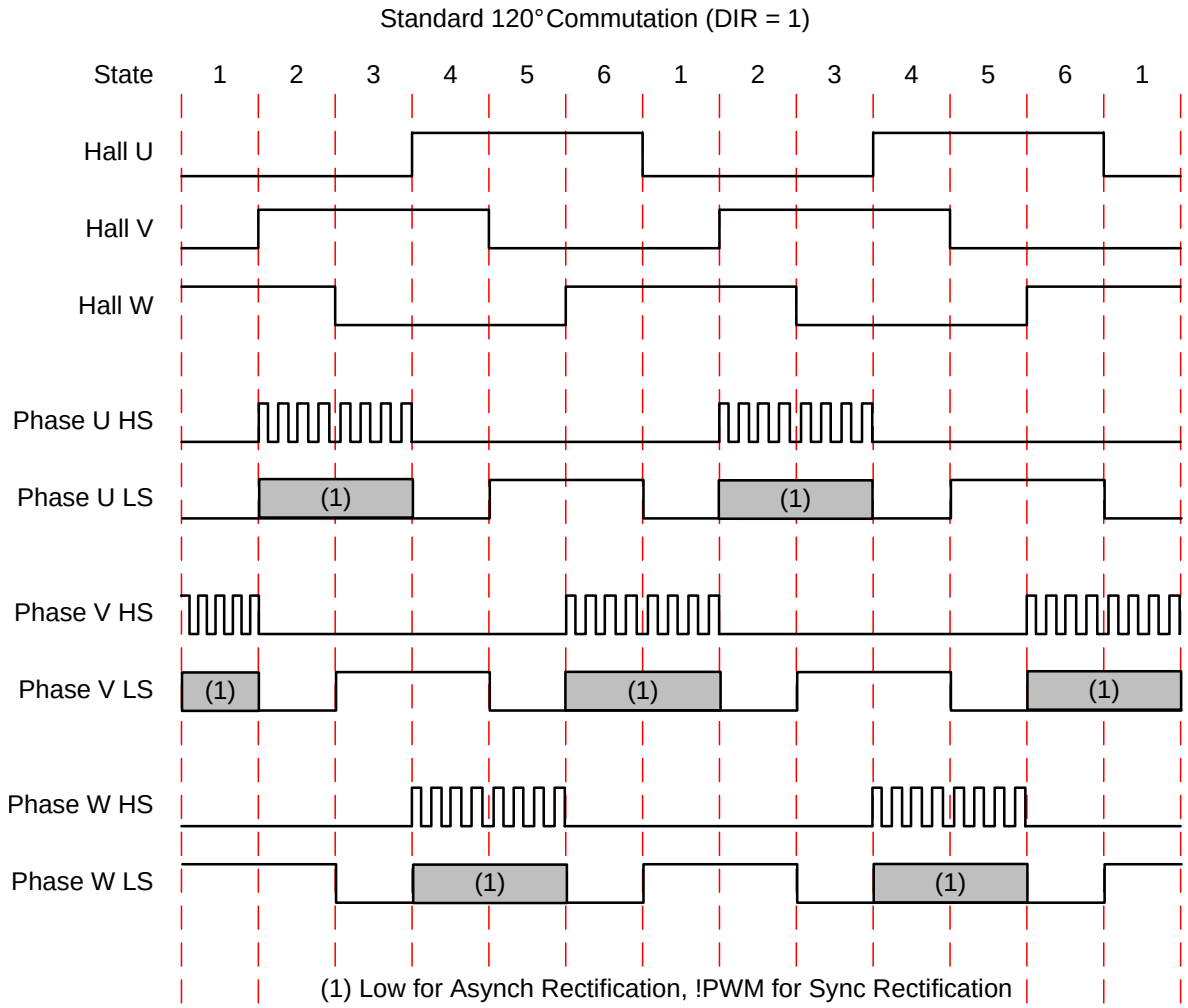

Figure 7. Standard 120° Commutation (DIR = 1)

Copyright © 2014–2017, Texas Instruments Incorporated

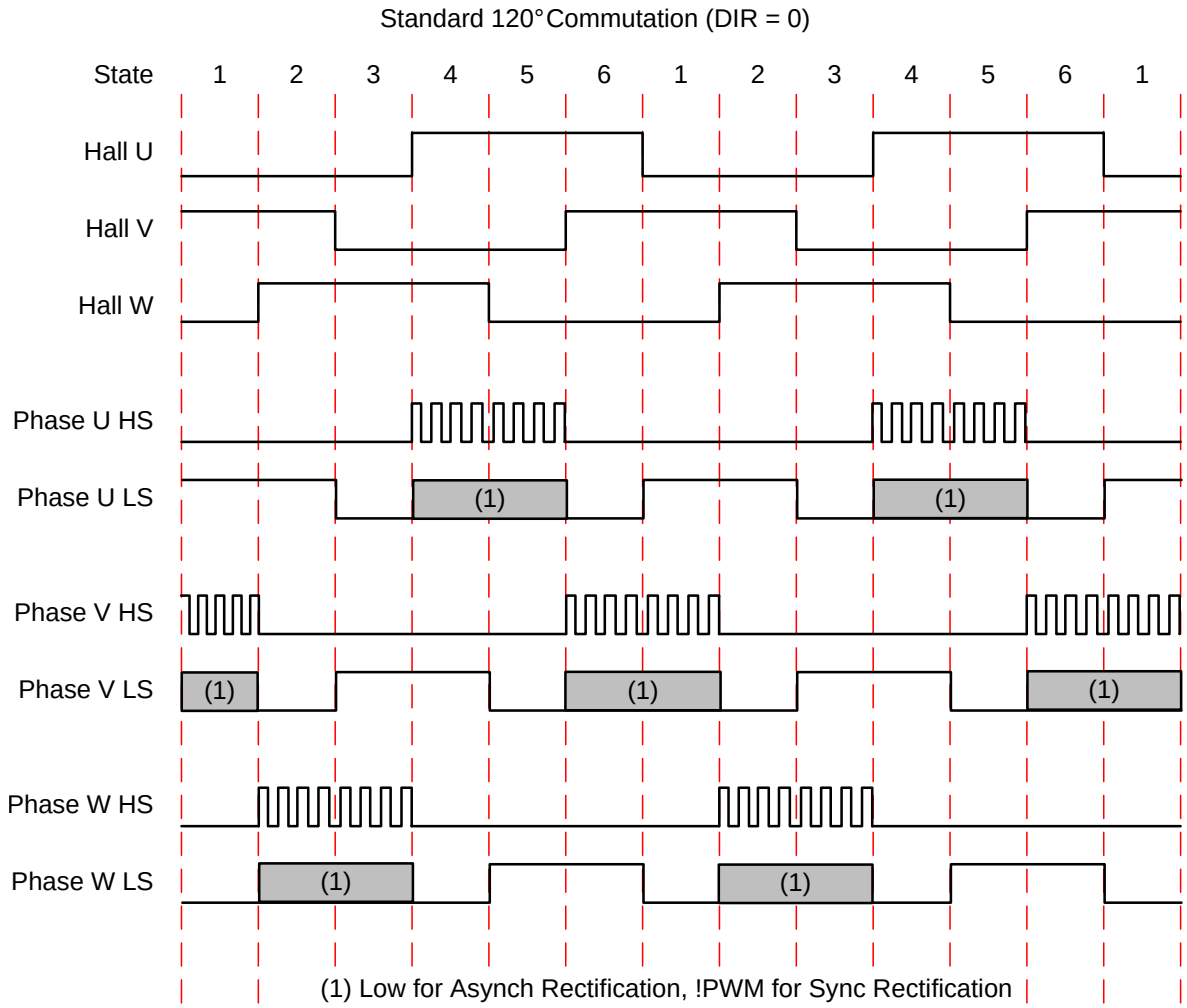

Figure 8. Standard 120° Commutation (DIR = 0)

7.3.4.2 120° Single-Hall Commutation

To generate commutation timing for single-Hall commutation, a digital timer is used to create a clock that runs at 960× the Hall sensor frequency. Only one Hall sensor input, HALL_U, is used for commutation; this eliminates any torque ripple caused by mechanical or electrical offsets of individual Hall sensors.

Single-Hall commutation is only enabled when the register BASIC = 0 and the motor is operating at a nearly constant speed or speed-locked condition. To control this function, logic is used to determine when the speed is constant and the speed control loop is locked. This logic generates the LOCK signal. The LOCK signal is also output on the LOCKn pin.

Except in PWM input modes, LOCK is also prevented from being signaled if the speed control loop integrator is saturated (either at 0 or full-scale), which indicates that the speed control loop is not locked.

Until LOCK goes active (for example, at start-up, stop, or application of a sudden load that causes motor speed to drop very quickly), standard 120° commutation is used. Because of this, three Hall sensors are required regardless of which commutation method is used.

The commutation timer drives a counter that can be offset with a value programmed in the ADVANCE register. This value allows the phase of commutation to be shifted relative to the actual Hall sensor transitions. Note that the phase advance is not functional in standard 120° commutation. The phase advance also has an automatic mode where the advance value is scaled according to motor speed (see *Auto Gain and Advance Compensation*).

Timing of 120° single-Hall commutation is essentially the same as standard 120° commutation shown previously. However, there are small time differences of when the transitions occur.

7.3.4.3 180° Sine-Wave-Drive Commutation

180° sine-wave-drive commutation uses a single Hall sensor to generate commutation timing, as described for 120° single-Hall commutation. In addition, the value of the commutation timer modulates the duty cycle of the outputs in accordance with a fixed pattern that approximates sinusoidal current through the windings.

The output of the commutation block is a 12-bit modulation value for each motor phase (U, V, and W) that represents the duty cycle modulation of the PWM for each output. Note that during 120° commutation, these values are either 0 or set to a constant value derived from the MOD120 register.

When using sine mode, MOD120 should be set to 3970.

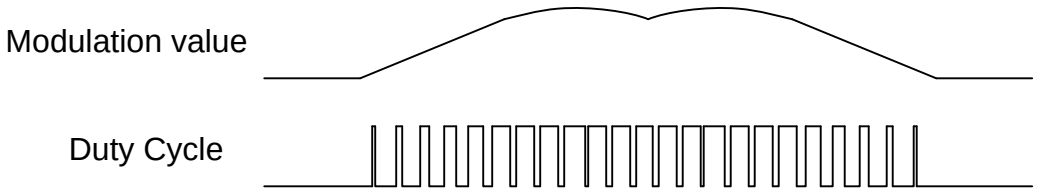

Figure 9. 180° Sine-Wave-Drive Commutation

During 180° sine-wave-drive commutation, commutation transitions occur midway between Hall transitions. The PWM duty cycle is modulated to provide sinusoidal current waveforms. Commutation (shown for asynchronous rectification) is in accordance with the table and diagrams below. Note that the diagrams show a representation of duty cycle, not level, for the PWM states.

Table 3. Commutation for Asynchronous Rectification(1)

STATE	HALL INPUTS						PRE-DRIVE OUTPUTS					
	DIR = 1			DIR = 0			PHASE U		PHASE V		PHASE W	
	U_H	V_H	W_H	U_H	V_H	W_H	U_HSGATE	U_LSGATE	V_HSGATE	V_LSGATE	W_HSGATE	W_LSGATE
1	L	L	H	H	H	L	PWM	L / !PWM(2)	PWM	L / !PWM(2)	L	H
2	L	H	H	H	L	L	PWM	L / !PWM(2)	PWM	L / !PWM(2)	L	H
3	L	H	L	H	L	H	PWM	L / !PWM(2)	L	H	PWM	L / !PWM(2)
4	H	H	L	L	L	H	PWM	L / !PWM(2)	L	H	PWM	L / !PWM(2)
5	H	L	L	L	H	H	L	H	PWM	L / !PWM(2)	PWM	L / !PWM(2)
6	H	L	H	L	H	L	L	H	PWM	L / !PWM(2)	L	L / !PWM(2)
1X	H	H	H	L	L	L	L	L	L	L	L	L
2X	L	L	L	H	H	H	L	L	L	L	L	L

(1) Hall sensor is "H" if the positive input pin voltage is higher than the negative input pin voltage. States 1X and 2X are illegal input combinations.
(2) During states where the phase is driven with a PWM signal, using asynchronous rectification, the LS gate is held off (L); using synchronous rectification, the LS gate is driven with the inverse of the HS gate.

Copyright © 2014–2017, Texas Instruments Incorporated

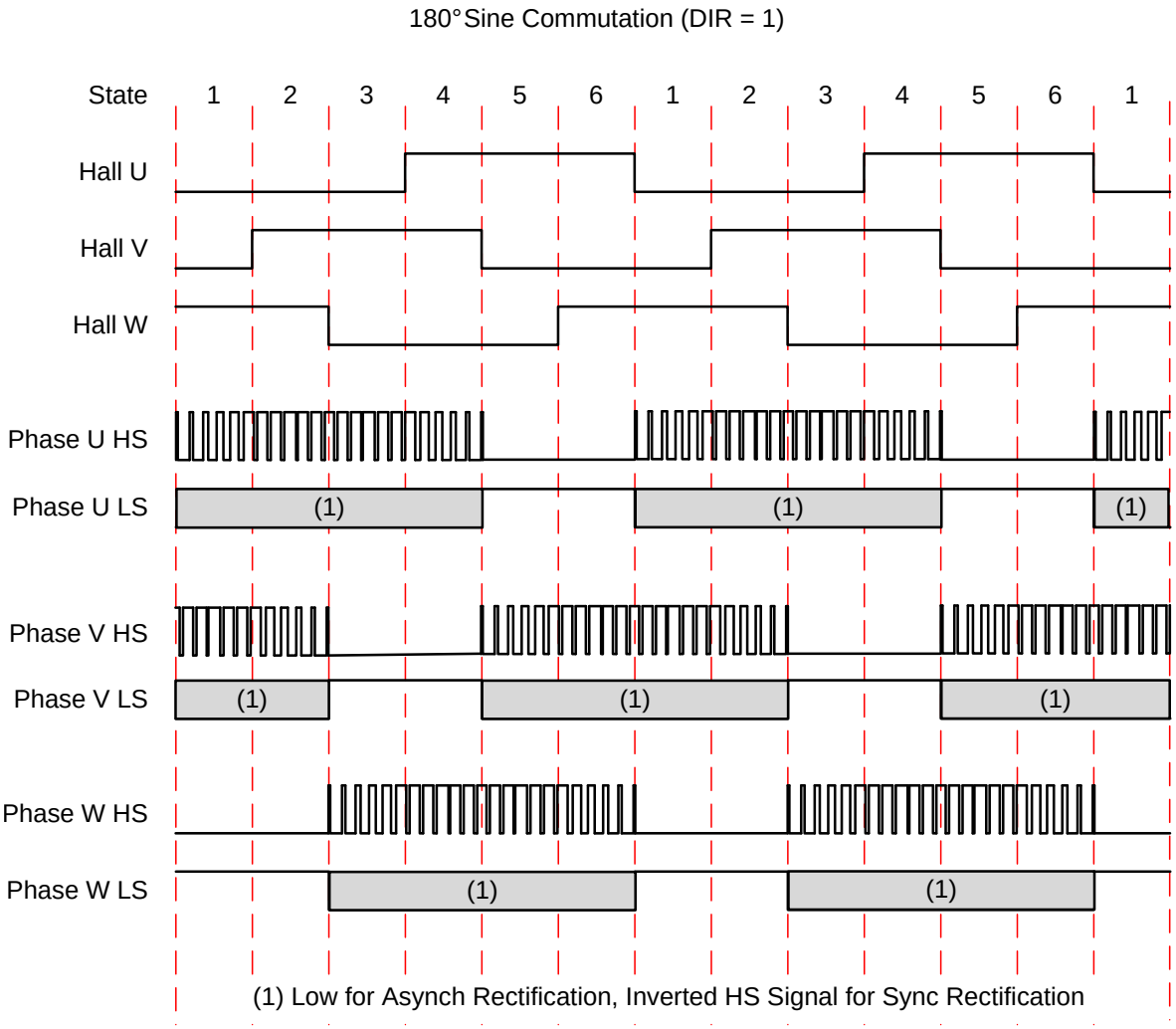

Figure 10. 180° Sine Commutation (DIR = 1)

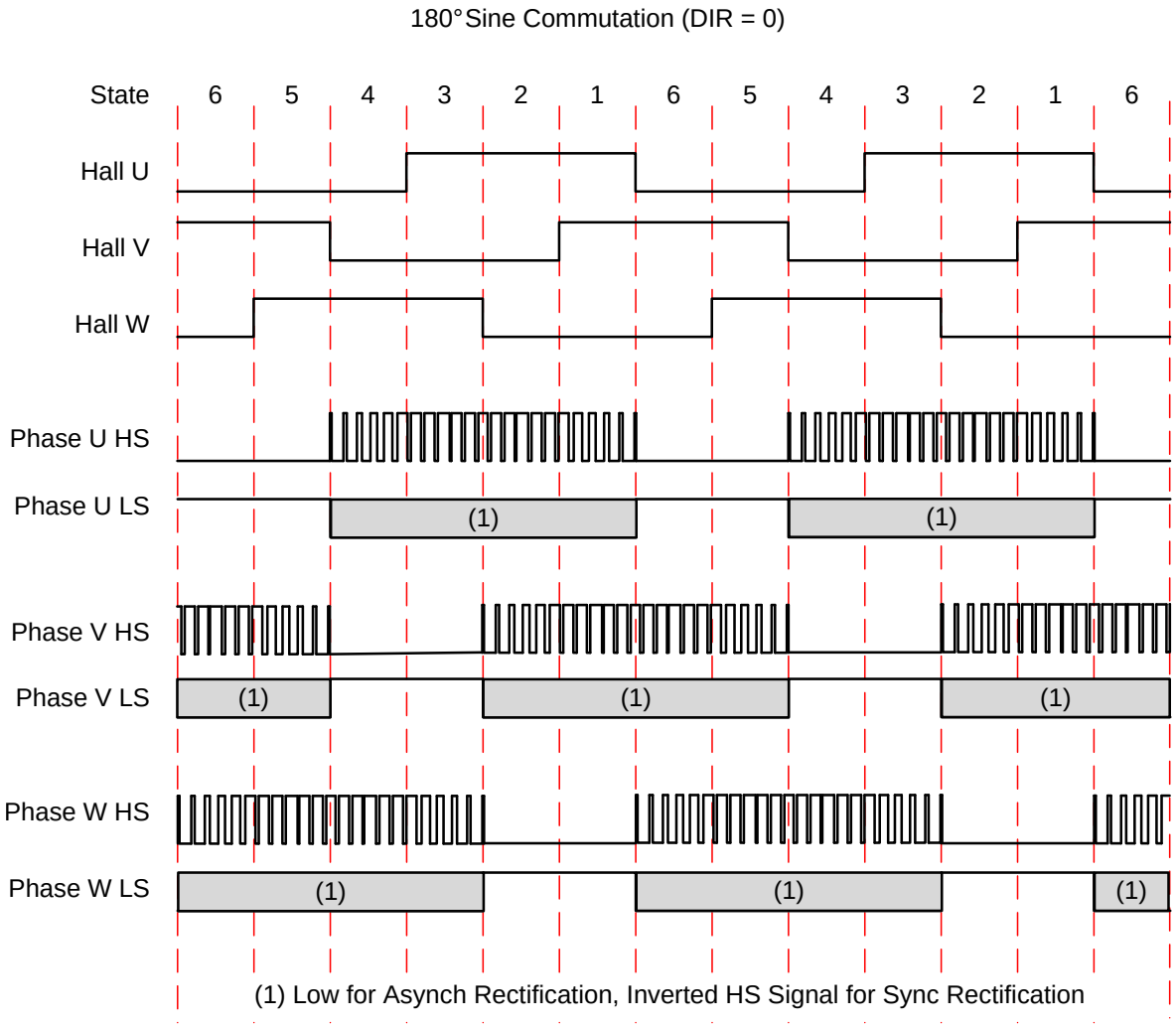

Figure 11. 180° Sine Commutation (DIR = 0)

Copyright © 2014–2017, Texas Instruments Incorporated

7.3.5 Commutation Logic Block Diagram

A block diagram of the commutation logic is shown in Figure 12.

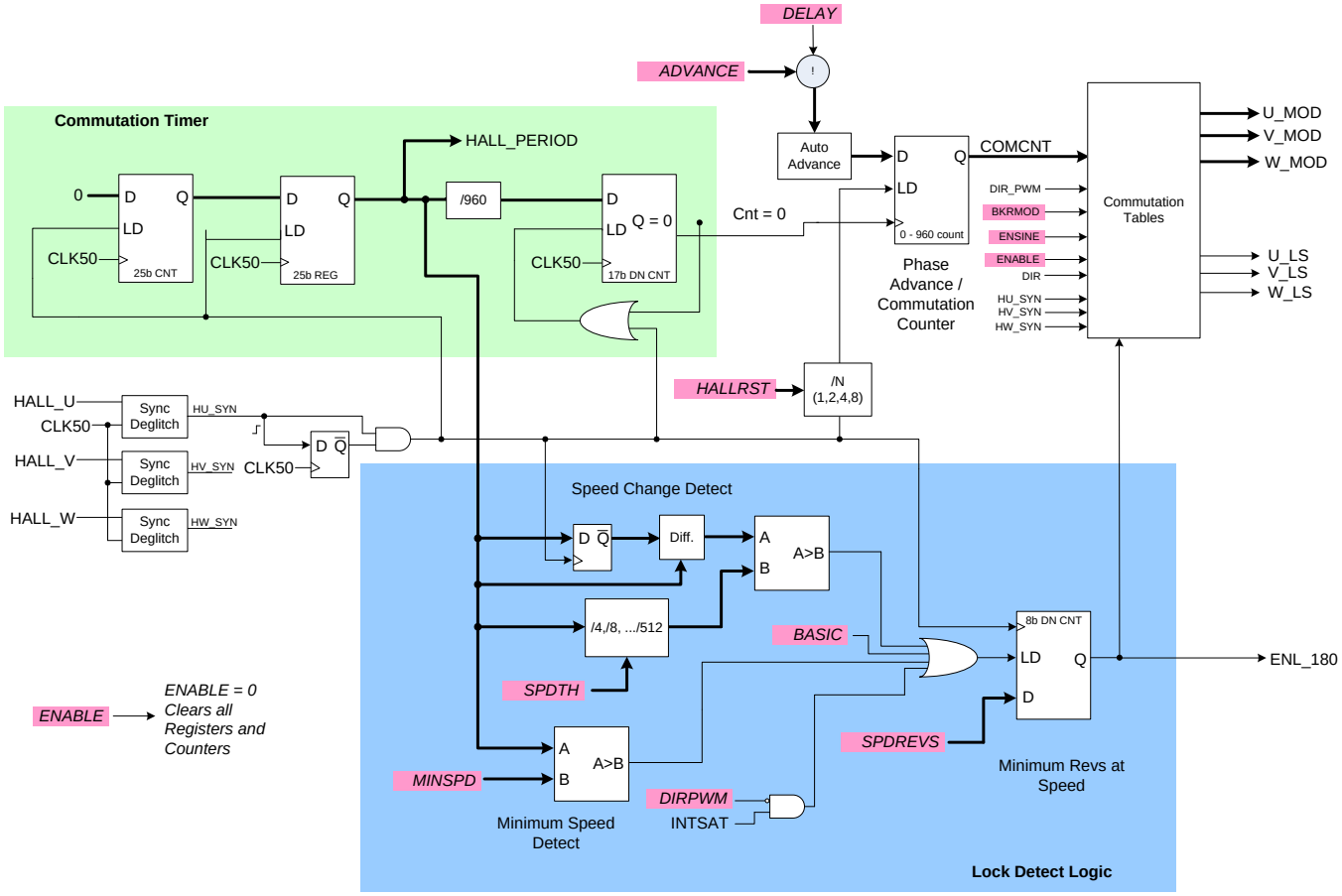

Figure 12. Commutation Logic

7.3.6 Commutation Parameters

A number of commutation parameters are programmable through registers accessed through the serial interface, including:

- ADVANCE — The phase of commutation is advanced (or delayed) relative to the Hall sensor transition by this 8-bit amount. Units are in commutation clocks, which is 1 / 960 of the HALL_U period. Note that phase advance is only applicable in single-Hall commutation modes. An automatic phase advance compensation mode can also be enabled by the AUTOADV bit (see *Auto Gain and Advance Compensation* for details).
- DELAY — if set, commutation is delayed relative to Hall transitions; if cleared, commutation is advanced relative to Hall transitions.
- BASIC — If set, commutation is a basic 120° 3-Hall mode with no ADVANCE.
- ENSINE — The ENSINE bit, when set, selects 180° sinusoidal commutation. The BASIC bit must also be 0.
- HALLRST — HALLRST sets how many HALL_U cycles pass for each commutation counter reset. In other words, the commutation counter is reset every N HALL_U edges. Selections available are 1, 2, 4, and 8.
- MINSPD — Sets the minimum Hall_U period that LOCK can be set. The 8-bit field represents 2.56 ms/count, with a max value of 652.8 ms.
- SPDREVS — After the MINSPD and SPEEDTH criteria are met, SPDREVS adds a minimum number of Hall_U periods that must occur for LOCK to be set.
- SPEEDTH — Sets how much speed variation is allowed across Hall_U periods while keeping LOCK set. This 3-bit field sets the percentage variation allowed by changing a programmable divider. Divisions of 1/4, 1/8, 1/16, 1/32, 1/64, 1/128, 1/256, and 1/512 are supported. These divisors correspond to 25%, 12.5%, 6.25%,

3.13%, 1.56%, 0.78%, 0.39%, and 0.20% variation per revolution.

- SPEED — In the Internal Register PWM Mode, SPEED divided by 4095 sets the input duty cycle. In Clock Frequency Mode, SPEED sets the open-loop gain during spin-up before LOCKn goes Low.

The diagram below shows how the lock parameters (MINSPD, SPEEDTH, and SPDREV) affect commutation mode.

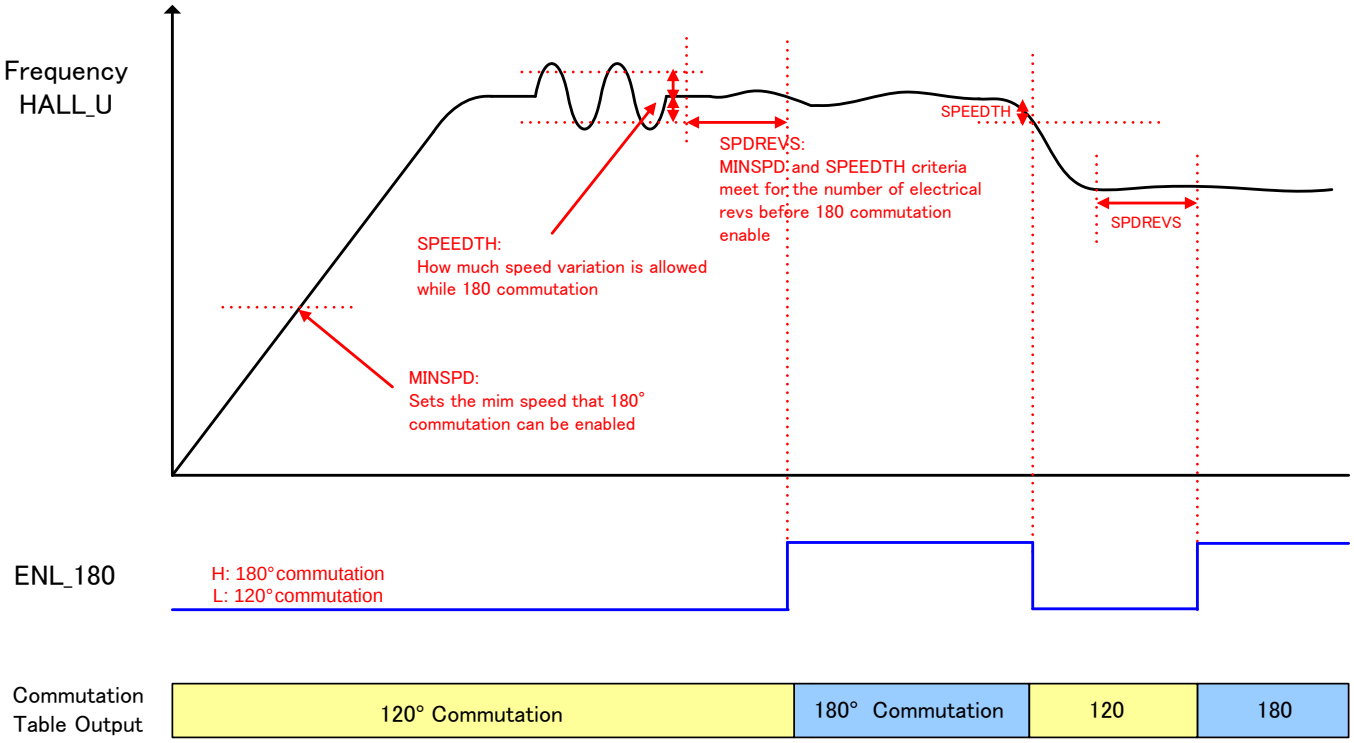

Figure 13. Commutation Parameters

7.3.7 Braking

Motor braking can be initiated by the BRKPOL register bit as well as the BRAKE pin. The BRKPOL register bit can also be used to program the polarity of the BRAKE pin, as it is combined with the pin with an exclusive-OR function as follows:

Table 4. Brake Behavior

BRAKE PIN	BRKPOL REGISTER BIT	RESULTING FUNCTION
0	0	Not brake
0	1	Brake
1	0	Brake
1	1	Not brake

When the motor is braking, all low-side drivers are held in an on state, causing all low-side FETs to turn on, and the integrator is reset to 0.

In addition, braking can be entered when the ENABLE pin is made inactive. BRKMOD controls the behavior of the outputs when ENABLE is inactive. If BRKMOD= 0, the outputs are 3-stated, resulting in the motor coasting; if BRKMOD = 1, all low-side FETs are turned on, causing the motor to brake.

Copyright © 2014–2017, Texas Instruments Incorporated

Table 5. BRKMOD

	BRKMOD = 0 COAST	BRKMOD = 1 BRAKE
RESET = 1	Coast	Brake
BRAKE = active	Brake	Brake
ENABLE = inactive	Coast	Brake
DIR	Coast	Brake
Clock off	Brake	Brake
Power down	Coast	Brake

7.3.8 Output Pre-Drivers

The output drivers for each phase consist of N-channel and P-channel MOSFET devices arranged as a CMOS buffer. They are designed to directly drive the gate of external N-channel power MOSFETs.

The outputs can provide synchronous or asynchronous rectification. In asynchronous rectification, only the high-side FET is turned on and off with the PWM signal; current is recirculated using external diodes, or the body diodes of the external FETs. In synchronous rectification, the low side FET is turned on when the high side is turned off.

Synchronous rectification is enabled or disabled using the SYNRECT control bit. When set to 1, synchronous rectification is used. In general, synchronous rectification results in better speed control and higher efficiency.

The high-side gate drive output UHSG is driven to VCP whenever the duty cycle output U_PD from the PWM generator is high, the enable signal U_HS from the commutation logic is active, and the current limit ($V_{LIMITER}$) is not active. If the high-side FET is on and a current limit event occurs, the high-side FET is immediately turned off until the next PWM cycle.

The low-side gate drive ULSG is driven to VM whenever the internal signal U_LS is high, or whenever synchronous rectification is active and UHSG is low.

Phases V and W operate in an identical fashion.

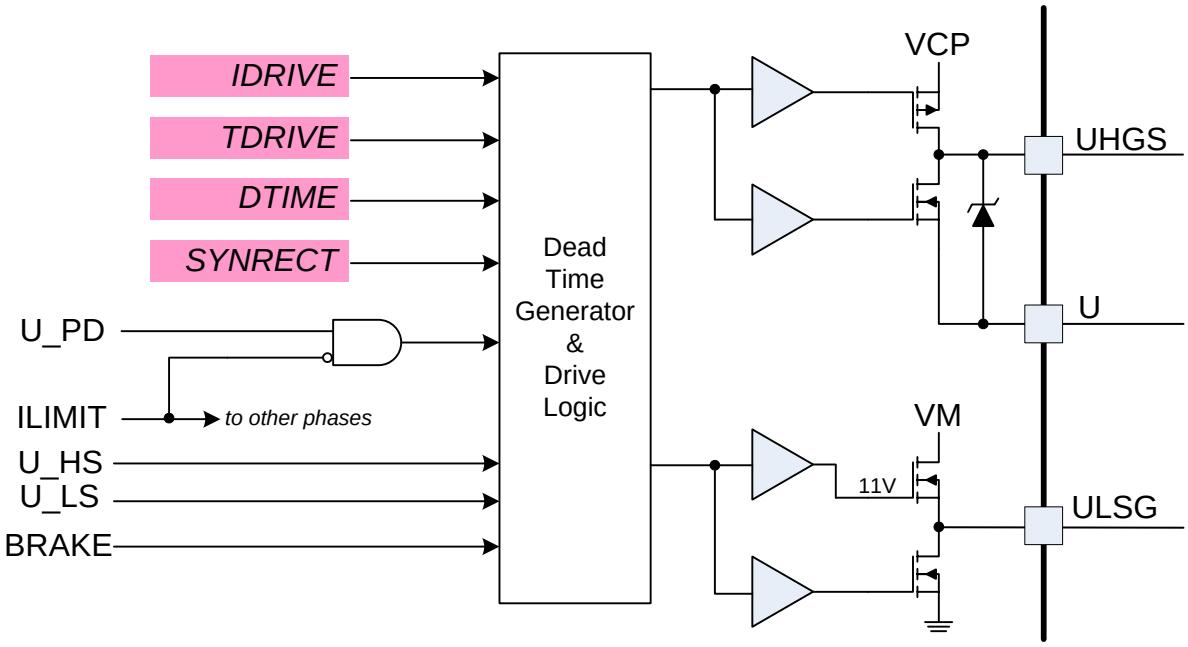

Figure 14. Predriver Circuit

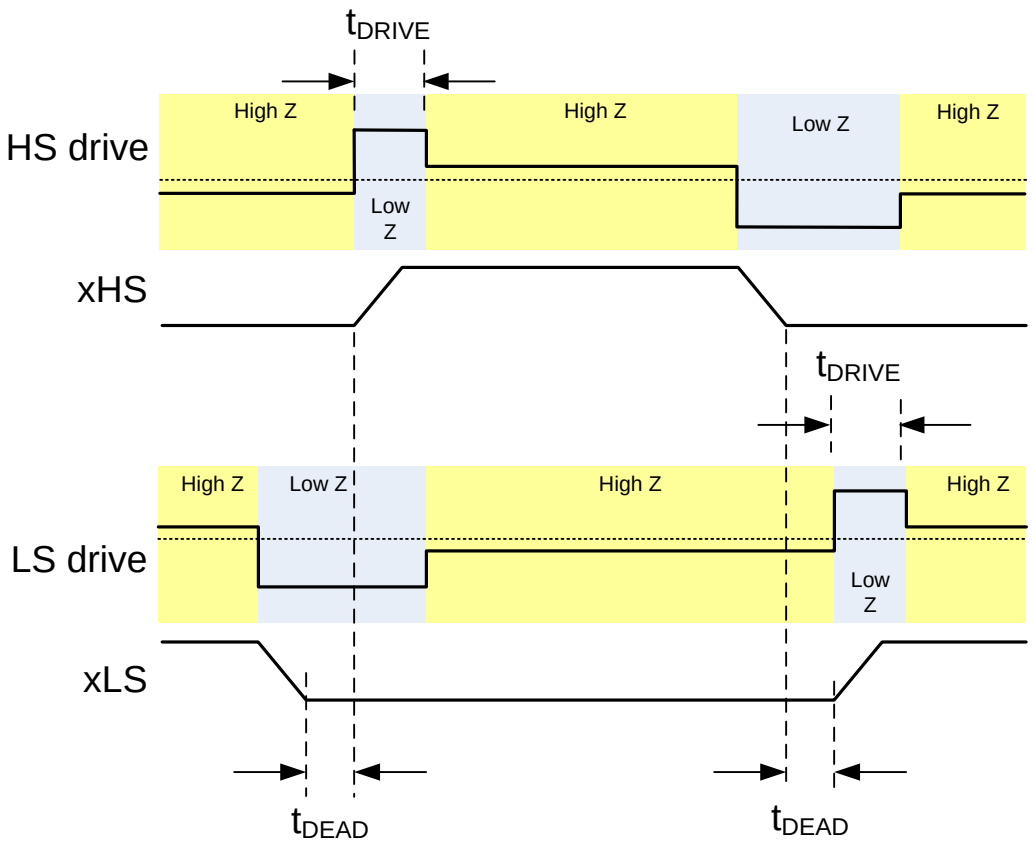

Figure 15. Drive Timing

The peak drive current of the pre-drivers is adjustable by setting the IDRIVE register bits. Peak drive currents may be set between 10 and 130 mA. Adjusting the peak current changes the output slew rate, which also depends on the FET input capacitance and gate charge.

When changing the state of the output, the peak current is applied for a short period of time (t_{DRIVE}), to charge the gate capacitance. This time is selected by setting the TDRIVE register bits. Times of 1, 5, 10, or 15 µs may be selected. After this time, a weak current source is used to keep the gate at the desired state. When selecting the gate drive strength for a given external FET, the selected current must be high enough to fully charge and discharge the gate during the time when driven at full current, or excessive power is dissipated in the FET.

During high-side turn-on, the low-side gate is held low with a low impedance. This prevents the gate-source capacitance of the low-side FET from inducing turn-on. Similarly, during low-side turn-on, the high-side gate is held off with a low impedance.

The pre-driver circuits include enforcement of a dead time in analog circuitry, which prevents the high-side and low-side FETs from conducting at the same time. Additional dead time can be added (in digital logic) by setting the DTIME register bits.

7.3.9 Current Limit

The current limit circuit activates if the voltage detected across the low-side sense resistor exceeds $V_{LIMITER}$. This feature restricts motor current to less than $V_{LIMITER}/R_{ISENSE}$, and it reduces the requirements of the external power supply. Note that the current limit circuit is ignored immediately after the PWM signal goes active for a short blanking time, to prevent false trips of the current limit circuit.

If current limit activates, the high-side FET is disabled until the beginning of the next PWM cycle. If synchronous rectification is enabled when the current limit activates, the low-side FET is activated while the high-side FET is disabled.

Copyright © 2014–2017, Texas Instruments Incorporated

7.3.10 Charge Pump

Since the output stages use N-channel FETs, a gate drive voltage higher than the VM power supply is needed to fully enhance the high-side FETS. The DRV8308 device integrates a charge pump circuit that generates a voltage approximately 10 V more than the VM supply for this purpose.

The charge pump requires two external capacitors for operation. For details on these capacitors (value, connection, and so forth), refer to the *Pin Functions* table in the *Pin Configurations and Functions* section.

The charge pump is shutdown when in standby mode (ENABLE inactive).

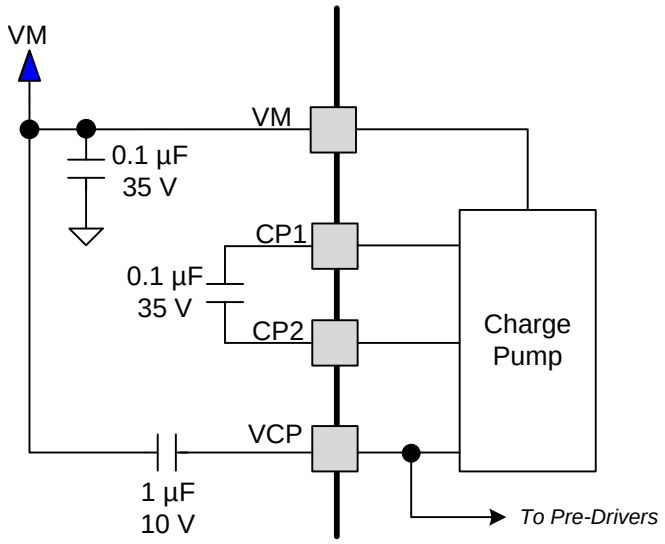

Figure 16. Charge Pump

7.3.11 5-V Linear Regulator

A 5-V linear regulator (VREG) is provided to power internal logic and external circuitry, such as the Hall effect sensors.

A capacitor must be connected from the VREG output to ground, even if the output is not used for external circuitry. The recommended capacitor value is a 0.1-µF, 10-V ceramic capacitor.

The VREG output is designed to provide up to 30-mA output current, but power dissipation and thermal conditions must be considered. As an example, with 24 V in and 20 mA out, power dissipated in the linear regulator is 19 V × 20 mA = 380 mW.

The VREG regulator is shutdown in standby mode (when ENABLE is inactive).

7.3.12 Power Switch

A low-current switch is provided in the DRV8308 device that can be used to power the Hall sensors or other external circuitry through the VSW pin. When ENABLE is active the switch is turned on, connecting the VSW pin to VM. When ENABLE is inactive the switch is turned off (standby mode).

7.3.13 Protection Circuits

A number of protection circuits are included in the DRV8308 device. Faults are reported by asserting the FAULTn pin (an active-low, open-drain output signal), as well as setting the appropriate bit or bits in the FAULT register. Note that bits in the FAULT register remain set until either a 0 is written to them, RESET is asserted, or the device power is cycled.

7.3.13.1 VM Undervoltage Lockout (UVLO)

If the VM power supply drops, there may not be enough voltage to fully turn on the output FETs. Operation in this condition causes excessive heating in the output FETs. To protect against this, the DRV8308 device contains an undervoltage lockout circuit.

Copyright © 2014–2017, Texas Instruments Incorporated

In the event that the VM supply voltage drops below the undervoltage lockout threshold (V_{UVLO}), the FAULTn pin is driven active and the motor driver is disabled. After VM returns to a voltage above the undervoltage lockout threshold, the FAULTn pin is high impedance and operation of the motor driver automatically resumes.

The UVLO bit in the FAULT register is set. This bit remains set until a 0 is written to the UVLO bit.

At power-up, the UVLO bit is set.

Note that register reads and writes are still possible during the UVLO condition, as long as VM stays above the VM reset threshold. If VM drops below the VM reset threshold, all registers are reset and register read or write is not functional.

7.3.13.2 VM Overvoltage (VMOV)

In some cases, if synchronous rectification is used, energy from the mechanical system can be forced back into the VM power supply. This can result in the VM power supply being boosted by the energy in the mechanical system, causing breakdown of the output FETs, or damaging the DRV8308 device. To protect against this, the DRV8308 device has overvoltage protection.

There are two overvoltage thresholds, selectable by the OVTH bit. An overvoltage event is recognized if the VM voltage exceeds the selected overvoltage threshold (VM_{OVLO}). Note that for the output FETs to be protected, they must be rated for a voltage greater than the selected overvoltage threshold.

In the event of an overvoltage, the FAULTn pin is pulled low. If synchronous rectification is enabled, the output stage is forced into asynchronous rectification. After VM returns to a voltage below the overvoltage threshold, the FAULTn pin is high impedance. If synchronous rectification was enabled prior to the overvoltage event, after a fixed 60-µs delay, synchronous rectification is re-enabled.

The VMOV bit in the FAULT register is set. This bit remains set until a 0 is written to the VMOV bit.

7.3.13.3 Motor Overcurrent (OCP)

Overcurrent protection (OCP) is provided on each FET in addition to the current limit circuit. The OCP circuit is designed to protect the output FETs from atypical conditions such as a short circuit between the motor outputs and each other, power, or ground.

The OCP circuit is independent from the current limit circuitry. OCP works by monitoring the voltage drop across the external FETs when they are enabled. If the voltage across a driven FET exceeds V_{FETOCP} for more than t_{OCP} an OCP event is recognized. V_{FETOCP} is configurable by register OCPTH and t_{OCP} is configurable by register OCPDEG.

In addition to monitoring the voltage across the FETs, an OCP event is triggered if the voltage applied to the ISEN pin exceeds the $V_{SENSEOCP}$ threshold voltage.

In the event of an OCP event, FAULTn is pulled low, and the motor driver is disabled.

After a fixed delay of 5 ms, the FAULTn pin is driven inactive and the motor driver is re-enabled.

The OCP bit in the FAULT register is set when an OCP event is recognized. This bit remains set until a 0 is written to the OCP bit.

7.3.13.4 Charge Pump Failure (CPFAIL)

If the voltage generated by the high-side charge pump is too low, the high-side output FETs are not fully turned on, and excessive heating results. To protect against this, the DRV8308 device has a circuit that monitors the charge pump voltage.

If the charge pump voltage drops below VCPFAIL, the FAULTn pin is pulled low and the motor driver is disabled. After the charge pump voltage returns to a voltage above the VCPFAIL threshold, the FAULTn pin is high impedance and operation of the motor driver automatically resumes.

The CPFAIL bit in the FAULT register is set when the charge pump voltage drops below VCPFAIL. This bit remains set until a 0 is written to the CPFAIL bit.

At power-up, the CPFAIL bit is set.

Copyright © 2014–2017, Texas Instruments Incorporated

7.3.13.5 Charge Pump Short (CPSC)

To protect against excessive power dissipation inside the DRV8308 device, a circuit monitors the charge pump and disables it in the event of a short circuit on the PCB.

If a short circuit is detected on the charge pump, the FAULTn pin is pulled low and the motor driver is disabled. After a fixed period of 5 s, the FAULTn pin is high impedance and operation of the motor driver automatically resumes. If the short circuit condition is still present, the cycle repeats.

The CPSC bit in the FAULT register is set when a short circuit is detected on the charge pump. This bit remains set until a 0 is written to the CPSC bit.

7.3.13.6 Overtemperature (OTS)

To protect against any number of faults that could result in excessive power dissipation inside the device, the DRV8308 device includes overtemperature protection.

Overtemperature protection activates if the temperature of the die exceeds the OTS threshold temperature (T_{TSD}). If this occurs, the FAULTn pin is pulled low, the device is disabled and the OTS bit in the FAULT register is set. This OTS bit remains set until a 0 is written to the OTS bit.

If the RETRY bit is set after the temperature has fallen below the OTS threshold, the part re-enables itself after a fixed delay of 5 s.

If the RETRY bit is not set, the part disables the pre-drivers until RESET is asserted, or until power has been removed and re-applied to the device.

Copyright © 2014–2017, Texas Instruments Incorporated

7.4 Device Functional Modes

7.4.1 Modes of Speed Input

The DRV8308 device is designed to support a wide range of motor speeds and constructions. Speeds of up to approximately 50000 RPM are supported with motor constructions of up to 16 poles, or corresponding lower speeds with more poles. This translates into a Hall sensor speed of up to 6.7 kHz. (The frequency of one Hall sensor can be calculated by RPM × (motor poles) / 120.)

Speed control of the motor is accomplished by varying the duty cycle applied to the external FETs. Three methods of speed control input are possible with the DRV8308 device:

- **Clock Frequency Mode**: This is closed-loop speed control that locks the FGOUT frequency with the CLKIN frequency.
- **Clock PWM Mode**: This is open-loop, where the duty cycle of the clock on CLKIN scales the speed of the motor.
- **Internal Register PWM Mode**: This is open-loop, where register SPEED divided by 4095 commands the input duty cycle.

The mode used is set by the SPDMODE register.

7.4.1.1 Clock Frequency Mode

For a practical guide on tuning closed-loop speed control, refer to Section 3 of the*DRV8308EVM User's Guide*.

In Clock Frequency Mode, the clock signal is deglitched by the 51.2-MHz clock. The deglitched input, along with the FG signal (derived from the FG amplifier, TACH input, or the Hall sensors), are input to a speed differentiator, where the CLKIN signal is compared to the actual speed of the motor (determined by the FG frequency). The speed differentiator outputs are UP and DOWN pulses.

The deglitcher and speed differentiator are shown in Figure 17:

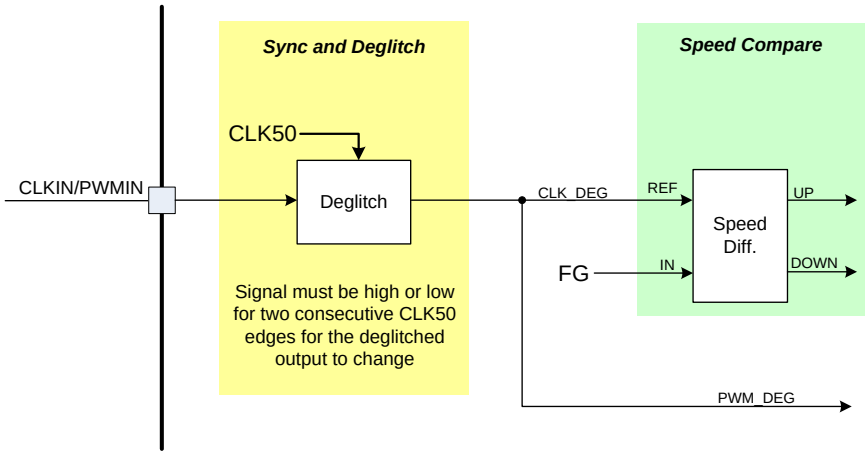

Figure 17. Deglitcher and Speed Differentiator

The UP and DOWN outputs of the speed differentiator are integrated by accumulating the value set by the SPDGAIN register for each cycle of the integrator clock (CLK50 divided by the value of the INTCLK register) that an UP or DOWN signal is active. If UP is active, the amount is added to the current integrator output; if the DOWN input is active, the value is subtracted. If neither signal is active, the integrator output remains the same. Note that the integrator output is reset to 0 at any time the motor is disabled or in brake, and at reset. The integrator output does not roll over at maximum or minimum count.

At the moment that ENABLE is made active, the integrator and filters are reset to 0. If there are no transitions on the CLKIN pin, no UP pulses are generated, so the integrator remains at 0, and the motor is not driven.

Once the motor is running, if the signal on CLKIN stops, DOWN pulses are generated until the integrator reaches 0. This actively decelerates the motor (brake) until the motor stops.

Copyright © 2014–2017, Texas Instruments Incorporated

Device Functional Modes (continued)

The output of the integrator is applied to a programmable digital filter. The filter has one pole and one zero. The pole location is programmable from approximately 100 to 1600 Hz, and is set via the FILK1 register; the zero location is programmable from 2 to 100 Hz and is set via the FILK2 register. The filter may be bypassed by setting the BYPFILT bit.

For a given pole and zero frequency, FILK1 and FILK2 are calculated as follows:

$$FILK2 = 2^{19} \frac{2\pi \frac{f_z}{f_s}}{1 + \pi \frac{f_z}{f_s}}, \qquad FILK1 = 2^{16} \frac{2\pi \frac{f_p}{f_s}}{1 + \pi \frac{f_p}{f_s}}$$

where

- f_z is the desired zero frequency
- f_p is the desired pole frequency
- f_s is the filter sample rate (195000 Hz)
- The result is rounded to the nearest integer (1)

Following the filter is a programmable lead compensator, which also contains one pole and one zero. The compensator characteristics are programmable by the COMPK1 and COMPK2 registers. Center frequency is programmable between 20 and 100 Hz, with a phase lead between 0° and 80°. The compensator may be bypassed by setting the BYPCOMP bit.

For a given pole and zero frequency, COMPK1 and COMPK2 are calculated as follows:

$$COMPK2 = 2^{19} \frac{2\pi \frac{f_z}{f_s}}{1 + \pi \frac{f_z}{f_s}}, \qquad COMPK1 = 2^{16} \frac{2\pi \frac{f_p}{f_s}}{1 + \pi \frac{f_p}{f_s}}$$

where

- f_z is the desired zero frequency
- f_p is the desired pole frequency
- f_s is the filter sample rate (195000 Hz)
- The result is rounded to the nearest integer (2)

The filter and compensator ratios also scale DC gain in the same way as LOOPGAIN. DC gain is scaled by 2×(FILK2/FILK1) and 0.5×(COMPK2/COMPK1).

The digital filter and compensator are reset to 0 whenever the motor is disabled.

The integrator, filter, and lead compensator result in a typical open-loop response as shown in Figure 18. Note that the locations of the poles and zeros are not restricted to what is shown.

Copyright © 2014–2017, Texas Instruments Incorporated

Device Functional Modes (continued)

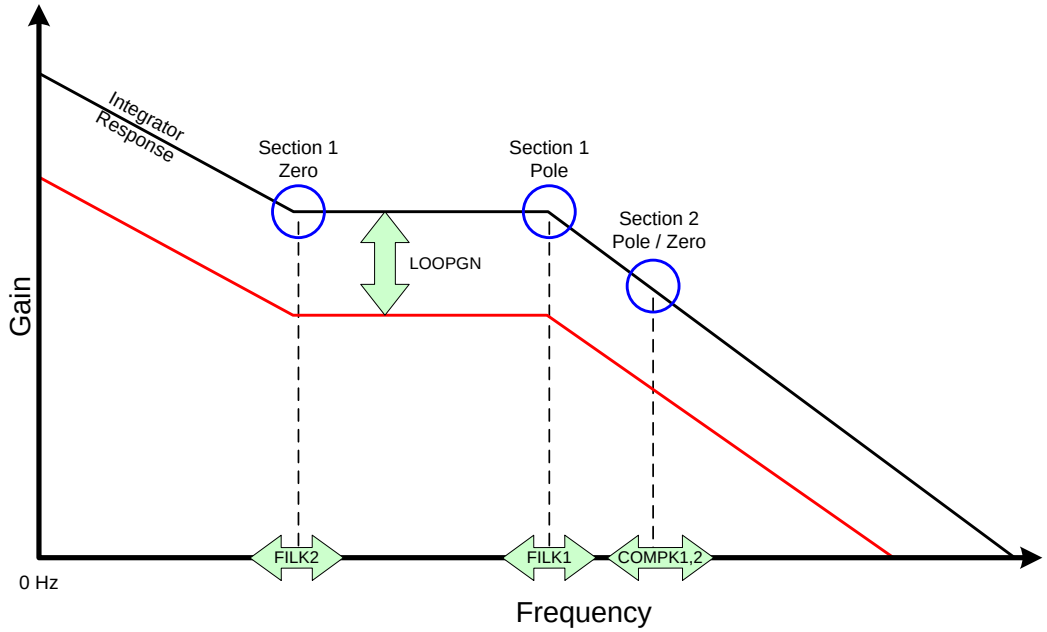

Figure 18. Open-Loop Response

The integrator operates on the periods of CLKIN and the Feedback as shown in Figure 19:

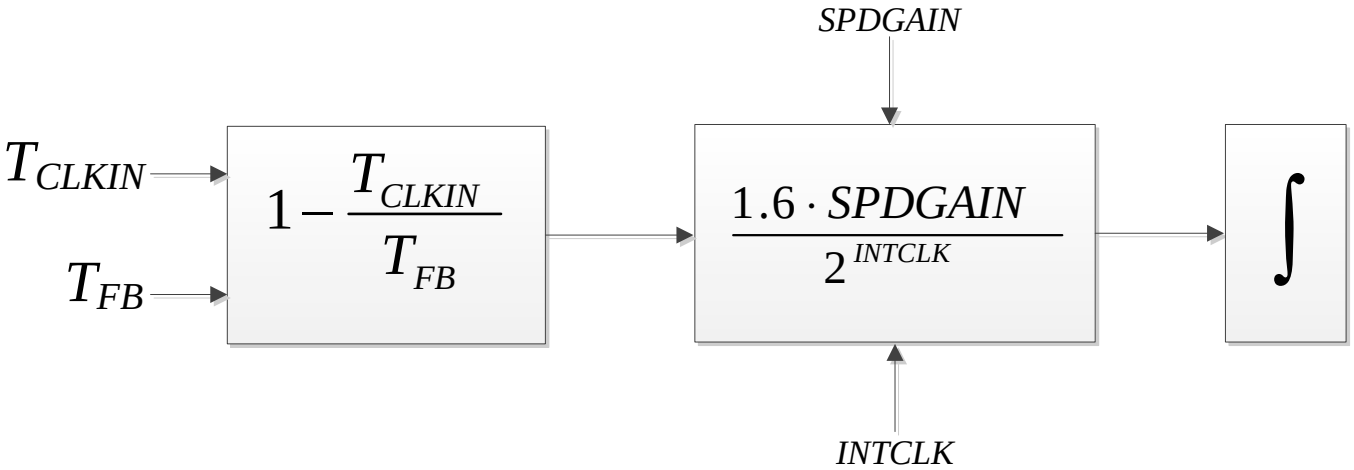

Figure 19. Integrator and Filters

7.4.1.2 Clock PWM and Internal Register PWM Modes

In PWM input modes, the PWM input signal is timed using a 50 MHz clock to generate a 12-bit number that corresponds to the duty cycle of the incoming PWM signal. The input PWM frequency should be between 16 and 50 kHz, higher PWM frequencies work, but resolution is degraded. Note that the gate driver's output PWM frequency is independent of the speed control PWM input frequency; the output PWM frequency is selected by the PWMF register bits.

The measured input duty cycle is scaled by the contents of the MOD120 register. With a full-scale MOD120 register (4095 decimal), the output duty cycle is 2× the input duty cycle. To make the output duty cycle equal to the input, a value of 2048 decimal should be written to MOD120.

An additional multiplication factor of 2 is introduced when the BYPCOMP bit is set; if BYPCOMP is set, the output duty cycle is 4× the input duty cycle (when MOD120 is 4095).

Copyright © 2014–2017, Texas Instruments Incorporated

Device Functional Modes (continued)

In register speed control mode, a 12-bit register SPEED is used to directly provide the speed command.

During sine commutation, the input duty cycle is multiplied by the modulation values for each phase (MOD_U, MOD_V, and MOD_W) to generate a 12-bit value that determines the output PWM duty cycle of each phase. Note that in 120° commutation, the MOD values are fixed at a duty cycle that is set by the MOD120 register.

The PWM frequency can be set to either 25, 50, 100, or 200 kHz, with register PWMF. Lower PWM frequencies are desirable to minimize switching losses; higher PWM frequencies provide better control resolution, especially at very high motor speeds.

The outputs of the PWM generators are the signals U_PD, V_PD, and W_PD. These contain the duty cycle information for each phase.

Modulation and PWM generation is shown in Figure 20:

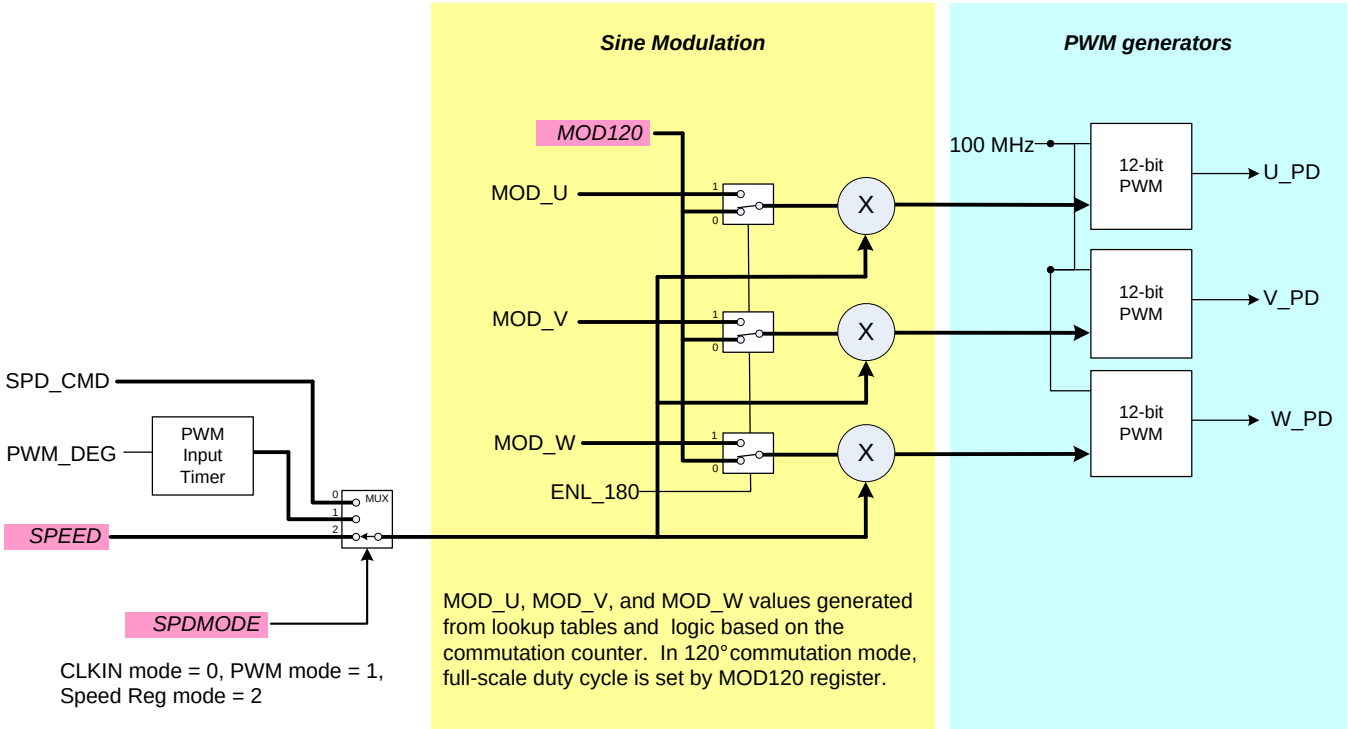

Figure 20. Modulation and PWM Generation

7.4.2 Auto Gain and Advance Compensation

The DRV8308 device provides modes to automatically scale the loop gain and the phase advance settings based on motor speed. This helps improve loop stability and motor performance in cases where the motor must operate over a wide speed range with a single set of parameters. For applications that run at only one speed, these functions should be left disabled.

Auto gain compensation is enabled by setting the AUTOGAIN bit. Auto gain will scale the LOOPGAIN of the system using the following equation:

$$\text{Computed Gain} = (\text{LOOPGAIN} / \text{AG_SETPT}) \times f_{CLKIN} \quad (3)$$

Automatic advance is enabled by setting the AUTOADV bit. The advance setting is scaled such that at zero speed, there is no phase advance. As speed increases, the phase advance is increased using the equation below:

$$\text{Computed Advance} = (\text{ADVANCE} / \text{AA_SETPT}) \times f_{Hall_U} \quad (4)$$

Both the gain and advance values are latched when LOCK goes active (when the motor is at constant speed).

The auto gain and advance functions are shown in Figure 21:

Device Functional Modes (continued)

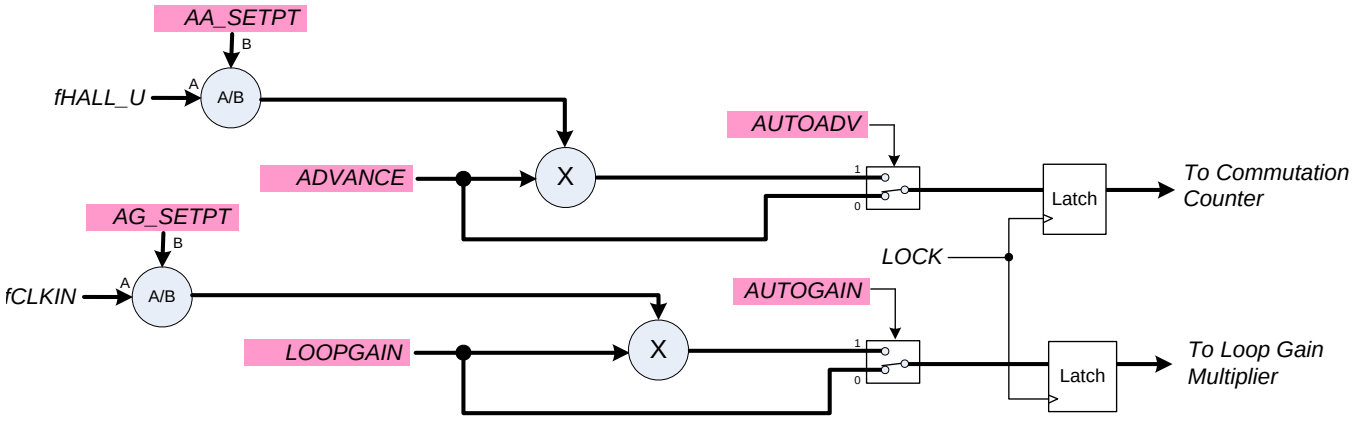

Figure 21. Auto Gain and Advance Functions

7.4.3 External EEPROM Mode

A serial EEPROM can be connected to the serial port to load the register contents. To activate external EEPROM mode, connect the SMODE pin to logic high. This causes the SPI interface to act as a master, and load data from an external EEPROM. The DRV8308 device latches data on the falling edge of SCLK.

The serial EEPROM should be a microwire-compatible, 16-bit-word device, such as the 93C46B. The VREG power supply can be used to power the EEPROM. Connections are as shown in Figure 22:

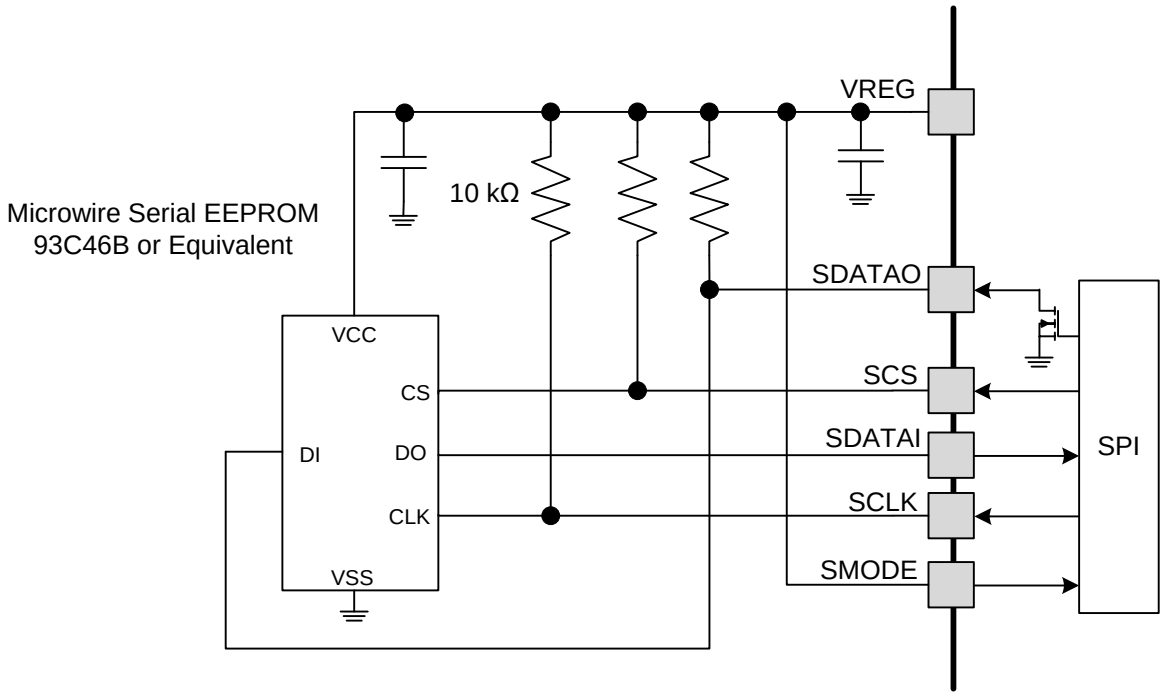

Figure 22. EEPROM Mode Connections

Data in the EEPROM should be arranged starting at address 0 exactly as shown in Table 6. EEPROM data bits 12 to 15 are unused.

Copyright © 2014–2017, Texas Instruments Incorporated

Device Functional Modes (continued)

To program the EEPROM device in-circuit while connected to the DRV8308 device, place the DRV8308 device into the reset state by driving RESET high. This 3-states the serial interface pins and allows them to be overdriven by external programming logic. Alternatively, the EEPROM may be programmed off-board before assembly. The DRV8308 device cannot program an EEPROM.

7.5 Programming

7.5.1 Serial Interface

A simple SPI serial interface is used to write to the control registers in the DRV8308 device. Optionally, the interface can be configured to automatically load the registers from an external EEPROM device.

Data is shifted into a holding register when SCS is active high. When SCS is returned to inactive (low), the data received is latched into the addressed register.

7.5.2 Serial Data Format

The serial data consists of a 24-bit serial write, with a read or write bit, 7 address bits, and 16 data bits. The address bits identify one of the registers defined in Table 8.

To write to a register, data is shifted in after the address as shown in Figure 23:

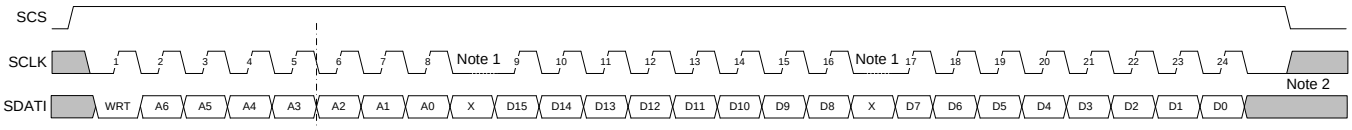

A. Any amount of time may pass between bits, as long as SCS stays active high. This allows 8-bit writes to be used.

B. Any additional clock edges encountered after the 24th edge are ignored.

Figure 23. SDF Timing Diagram 1

Data may be read from the registers through the SDATO pin. During a read operation, only the address is used from the SDATI pin; the data bits following are ignored. Reading is enabled by setting the READ bit at the beginning of the access:

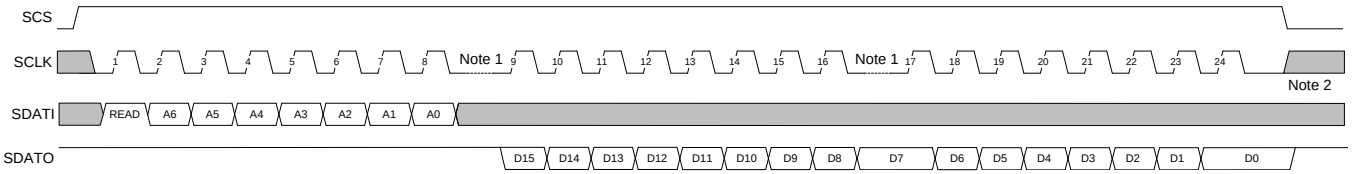

A. Any amount of time may pass between bits, as long as SCS stays active high. This allows 8-bit writes to be used.

B. Any additional clock edges encountered after the 24th edge are ignored.

Figure 24. SDF Timing Diagram 2

Copyright © 2014–2017, Texas Instruments Incorporated

Programming (continued)

7.5.3 Programming the OTP Configuration Memory

To permanently program the non-volatile OTP memory, first write all the data into the registers as described previously, and then follow this sequence:

Table 6. Programming the OTP Configuration Memory

ADDRESS	DATA	ACTION
--	--	device ENABLE must be active
0x2D	0x1213	write
0x2D	0x1415	write
0x2D	0x1617	write
0x2D	0x1819	write
0x39	0x0002	write
--	--	wait 10 ms minimum
0x2D	0EDD	write

The internal OTP memory can only be programmed once. After programming, the registers can still be overwritten by accesses through the SPI port, or by using an external EEPROM.

7.6 Register Map

7.6.1 Control Registers

The DRV8308 device uses internal registers to set operation parameters, including the characteristics of the speed control loop, commutation settings, gate drive current, and so forth. The registers are programmed through a serial SPI communications interface. In addition, the registers can be permanently programmed into non-volatile OTP memory, or loaded from an external serial EEPROM device.

Table 7 is the register map for the device.

Copyright © 2014–2017, Texas Instruments Incorporated

Table 7. Control Register Map

Address	Bit 15	Bit 14	Bit 13	Bit 12	Bit 11	Bit 10	Bit 9	Bit 8	Bit 7	Bit 6	Bit 5	Bit 4	Bit 3	Bit 2	Bit 1	Bit 0
0x00	AG_SETPT				ENPOL	DIRPOL	BRKPOL	SYNRECT	PWMF		SPDMODE		FGSEL		BRKMOD	RETRY
0x01	RSVD								ADVANCE							
0x02	SPDREVS								MINSPD							
0x03	BASIC	SPEEDTH			MOD120											
0x04	RSVD		HALLRST		DELAY	AUTOADV	AUTOGAIN	ENSINE	TDRIVE		DTIME			IDRIVE		
0x05	RSVD	INTCLK			SPDGAIN											
0x06	HALLPOL	RSVD		BYPFILT	FILK1											
0x07	RSVD				FILK2											
0x08	RSVD			BYPCOMP	COMK1											
0x09	AA_SETPT				COMK2											
0x0A	OCPDEG		OCPTH		OVTH	VREG_EN	LOOPGAIN									
0x0B	RSVD				SPEED											
0x2A	RSVD										VMOV	CPFAIL	UVLO	OTS	CPOC	OCP

Copyright © 2014–2017, Texas Instruments Incorporated

At power-up, when VM rises above the VM reset threshold, or whenever RESET is toggled, the register contents are loaded from the OTP memory or EEPROM (depending on SMODE). For details on external EEPROM connections, see *External EEPROM Mode*. If the OTP has not been programmed and the DRV8308 device is powered-up with SMODE low, the default register values are all 0, except for the FAULT register, which defaults to 0x18. FAULT bits can be cleared by writing 0.

At any time, the register contents may be written or overwritten through the SPI interface.

For detailed descriptions for each register, refer to the prior sections.

Table 8. Register Descriptions

ADDRESS	BIT	NAME	DESCRIPTION	TYPE[(1)]
0x00	15:12	AG_SETPT	Autogain Setpoint 0000 = 3 Hz; 0001 = 6 Hz; 0010 = 12 Hz; 0011 = 24 Hz; 0100 = 48 Hz; 0101 = 95 Hz; 0110 = 191 Hz; 0111 = 382 Hz; 1000 = 763 Hz; 1001 = 1.5 kHz; 1010 = 3 kHz; 1011 = 6 kHz; 1100 = 12 kHz; 1101 = 24 kHz; 1110 = 49 kHz; 1111 = 98 kHz	RW
	11	ENPOL	ENABLE pin polarity 0 = Device is active when ENABLE is high 1 = Device is active when ENABLE is low	RW
	10	DIRPOL	DIR pin polarity 0 = Normal DIR pin behavior 1 = Inversed DIR pin behavior	RW
	9	BRKPOL	BRAKE pin polarity 0 = Brake when BRAKE is high 1 = Brake when BRAKE is low	RW
	8	SYNRECT	Synchronous rectification 0 = Disabled 1 = Enabled	RW
	7:6	PWMF	The PWM frequency used on the external FETs 00 = 25 kHz 01 = 50 kHz 10 = 100 kHz 11 = 200 kHz	RW
	5:4	SPDMODE	Speed control mode 00 = Clock Frequency Mode 01 = Clock PWM Mode 10 = Internal Register PWM Mode 11 = Reserved	RW
	3:2	FGSEL	FG select 00 = Use HALL_U to generate FG 01 = Use XOR of all three Hall sensors 10 = Use FG amplifier input 11 = Use TACH input signal	RW
	1	BRKMOD	Motor brake mode 0 = Coast when ENABLE is inactive (outputs 3-state) 1 = Brake when ENABLE is inactive (all low-side FETs on)	RW
	0	RETRY	Retry mode 0 = Latch off in case of fault 1 = Automatic retry in case of fault	RW
0x01	15:8	RSVD	Reserved	–
	7:0	ADVANCE	Commutation timing advance versus Hall signals; each count is 1 / 960 the Hall_U period	RW
0x02	15:8	SPDREVS	After the MINSPD and SPEEDTH criteria are met, SPDREVS adds a minimum number of Hall_U periods that must occur for LOCK to be set	RW
	7:0	MINSPD	Sets the minimum Hall_U period that LOCK can be set; each count is 2.56 ms	RW

(1) R = Read Only; RW = Read or Write. Fault registers can only be written 0.

Copyright © 2014–2017, Texas Instruments Incorporated

Table 8. Register Descriptions (continued)

ADDRESS	BIT	NAME	DESCRIPTION	TYPE(1)
0x03	15	BASIC	Basic operation 0 = Normal device operation 1 = Disables ADVANCE functionality and forces 3-Hall 120° commutation	RW
	14:12	SPEEDTH	Speed change tolerance for LOCK 000 = 1/512 rev (0.20%) 011 = 1/64 rev (1.56%) 110 = 1/8 rev (12.5%) 001 = 1/256 rev (0.39%) 100 = 1/32 rev (3.13%) 111 = 1/4 rev (25%) 010 = 1/128 rev (0.78%) 101 = 1/16 rev (6.25%)	RW
	11:0	MOD120	Scales the input duty cycle in PWM modes	RW
0x04	15:14	RSVD	Reserved	RW
	13:12	HALLRST	Sets the frequency to reset the Hall commutation counter 00 = Every Hall_U cycle 01 = Every 2nd Hall_U cycle 10 = Every 4th Hall_U cycle 11 = Every 8th Hall_U cycle	RW
	11	DELAY	Controls whether ADVANCE leads or lags Hall signals 0 = Commutate before Hall signals arrive 1 = Commutate after Hall signals arrive	RW
	10	AUTOADV	Enables automatic advance compensation 0 = Disabled 1 = Enabled	RW
	9	AUTOGAIN	Enables automatic gain compensation 0 = Disabled 1 = Enabled	RW
	8	ENSINE	Enables 180° sine wave current drive 0 = Disabled 1 = Enabled	RW
	7:6	TDRIVE	Predriver high-current drive time 00 = 1 µs 01 = 5 µs 10 = 10 µs 11 = 15 µs	RW
	5:3	DTIME	Additional dead time added between high-side and low-side driving (typical) 000 = 60 ns 011 = 500 ns 110 = 1.24 µs 001 = 120 ns 100 = 740 ns 111 = 1.5 µs 010 = 240 ns 101 = 1.0 µs	RW
	2:0	IDRIVE	Predriver output peak current 000 = 10 mA 011 = 50 mA 110 = 110 mA 001 = 20 mA 100 = 90 mA 111 = 130 mA 010 = 30 mA 101 = 100 mA	RW
0x05	15	RSVD	Reserved	–
	14:12	INTCLK	Integrator clock frequency 000 = 50 MHz 011 = 6.3 MHz 110 = 0.8 MHz 001 = 25 MHz 100 = 3.1 MHz 111 = 0.4 MHz 010 = 12.5 MHz 101 = 1.6 MHz	RW
	11:0	SPDGAIN	Speed compensator gain	RW
0x06	15	HALLPOL	Hall polarity 0 = Hall signal logic levels are directly used 1 = Hall signal logic levels are inverted	RW
	14:13	RSVD	Reserved	–
	12	BYPFILT	Bypass the filter that FILK1 and FILK2 configure 0 = Filter is enabled 1 = Filter is disabled (FILK1 and FILK2 are ignored)	RW
	11:0	FILK1	Filter coefficient that sets the pole frequency	RW

Copyright © 2014–2017, Texas Instruments Incorporated

Table 8. Register Descriptions (continued)

ADDRESS	BIT	NAME	DESCRIPTION	TYPE[1]
0x07	15:12	RSVD	Reserved	–
	11:0	FILK2	Filter coefficient that sets the zero frequency	RW
0x08	15:13	RSVD	Reserved	–
	12	BYPCOMP	Bypass the compensator (COMPK1 and COMPK2 are ignored) 0 = Filter is enabled 1 = Filter is disabled (FILK1 and FILK2 are ignored)	RW
	11:0	COMPK1	Compensator coefficient that sets the pole frequency	RW
0x09	15:12	AA_SETPT	Autoadvance setpoint 0000 = 3 Hz; 0001 = 6 Hz; 0010 = 12 Hz; 0011 = 24 Hz; 0100 = 48 Hz; 0101 = 95 Hz; 0110 = 191 Hz; 0111 = 382 Hz; 1000 = 763 Hz; 1001 = 1.5 kHz; 1010 = 3 kHz; 1011 = 6 kHz; 1100 = 12 kHz; 1101 = 24 kHz; 1110 = 49 kHz; 1111 = 98 kHz	RW
	11:0	COMPK2	Compensator coefficient that sets the zero frequency	RW
0x0A	15:14	OCPDEG	Overcurrent protection deglitch time to ignore voltage spikes. Controls t_{OCP} and t_{BLANK}. 00: t_{ocp} = 1.6µs, t_{BLANK} = 2µs 01: t_{ocp} = 2.3µs, t_{BLANK} = 3µs 10: t_{ocp} = 3µs, t_{BLANK} = 3.75µs 11: t_{ocp} = 5µs, t_{BLANK} = 6µs	RW
	13:12	OCPTH	Protection threshold for V_{FETOCP} 00 = 250 mV 01 = 500 mV 10 = 750 mV 11 = 1000 mV	RW
	11	OVTH	Protection threshold for V_{OVLO} 0 = 34.5 V 1 = 28 V	RW
	10	VREG_EN	Writing this bit over SPI requires ENABLE to be active. 0 = VREG is enabled only when ENABLE is active 1 = VREG is always enabled	RW
	9:0	LOOPGAIN	Sets the overall gain for the speed control loop	RW
0x0B	15:12	RSVD	Reserved	–
	11:0	SPEED	In the Internal Register PWM Mode, SPEED divided by 4095 sets the input duty cycle. In Clock Frequency Mode, SPEED sets the open-loop gain during spin-up before LOCKn goes Low.	RW
0x2A	15:7	RSVD	Reserved	–
	6	RSVD	Reserved	RW
	5	VMOV	Fault: VM overvoltage 0 = Normal 1 = Fault detected	RW
	4	CPFAIL	Fault: charge pump undervoltage 0 = Normal 1 = Fault detected (default on power up)	RW
	3	UVLO	Fault: VM undervoltage 0 = Normal 1 = Fault detected (default on power up)	RW
	2	OTS	Fault: overtemperature shutdown 0 = Normal 1 = Fault detected	RW
	1	CPOC	Fault: charge pump overcurrent 0 = Normal 1 = Fault detected	RW
	0	OCP	Fault: motor OCP 0 = Normal 1 = Fault detected	RW

Copyright © 2014–2017, Texas Instruments Incorporated

8 Application and Implementation

NOTE

Information in the following applications sections is not part of the TI component specification, and TI does not warrant its accuracy or completeness. TI's customers are responsible for determining suitability of components for their purposes. Customers should validate and test their design implementation to confirm system functionality.

8.1 Application Information

8.1.1 Internal Speed Control Loop Constraints

The DRV8308 device is a versatile speed controller and driver for small, 3-phase brushless motors. However, there are some limitations to its application.

The built-in speed control loop is designed to work optimally with motor electrical speeds from about 50 Hz up to 6.7 kHz. For an 8-pole motor, this translates into about 500 RPM up to more than 100000 RPM. For motors with higher pole counts, these speeds scale down; for lower pole counts, they scale up.

Operation is possible at slower or faster speeds, but speed control becomes less effective, especially if using the Hall sensors for speed feedback (as opposed to the FG input).

Typically, the speed loop is optimized (by setting the filter coefficients and gains) at one desired motor speed. Operation is possible with one set of parameters over a limited speed range (for example, 1000 RPM to 2000 RPM), However, operation over a very wide speed range requires different parameters. The use of the auto gain and auto advance features can extend the dynamic range up to 4×.

When using the SPI interface to program the registers, the parameters can be updated at any time, even while the motor is running. In this manner, a wider range of speeds can be accommodated by the speed loop.

When not using the internal speed loop (when controlling the motor using PWM input or register speed control), the limits imposed by the speed loop do not apply. An external speed control implementation (using a microcontroller, FPGA, or other logic) can essentially control the motor current directly.

However, if using sine commutation, there are limits to the minimum and maximum speed, which are dictated by the timers that are used to generate the commutation sequence. The commutation timer is a 25-bit timer clocked at 50 MHz; therefore, the longest time it can capture is 655 ms. This limits the slowest speed to about 1.5 Hz (or 23 RPM for an 8-pole motor). At the other extreme, there are 960 steps in each sine commutation cycle. To ensure that there is enough time for the steps, the maximum speed is that which generates 960 counts at 50 MHz, or 52 kHz. This corresponds to a maximum speed of 800000 RPM for an 8-pole motor.

When not using the internal speed loop and using 120° commutation (using all three Hall sensors), there are no speed limitations. Commutation is performed with combinational logic.

8.1.2 Hall Sensor Configurations and Connections

The Hall sensor inputs on the DRV8308 device are capable of interfacing with a variety of Hall sensors. Typically, a Hall element is used, which outputs a differential signal on the order of 100 mV. To use this type of sensor, the VREG5 regulator can be used to power the Hall sensor. Connections are as shown in Figure 25:

Copyright © 2014–2017, Texas Instruments Incorporated

Application Information (continued)

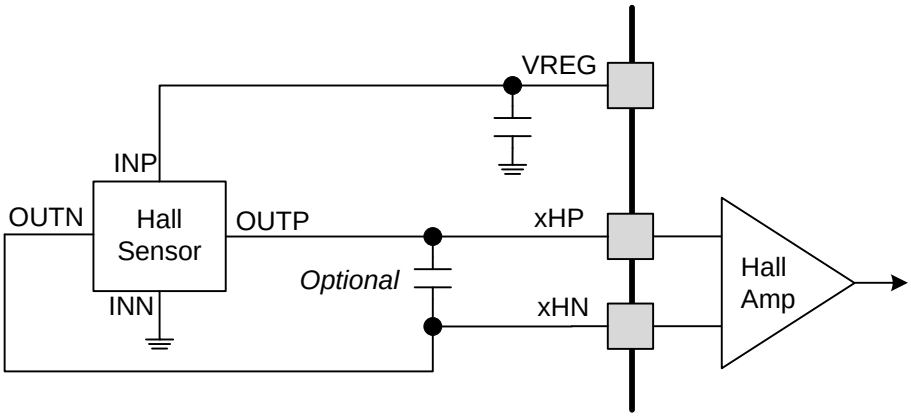

Figure 25. Hall Sensor Connections

Since the amplitude of the Hall sensor output signal is very low, often capacitors are placed across the Hall inputs to help reject noise coupled from the motor PWM. Typically capacitors from 1 to 100 nF are used.

Some motors use digital Hall sensors with open-drain outputs. These sensors can also be used with the DRV8308 device, with the addition of a few resistors:

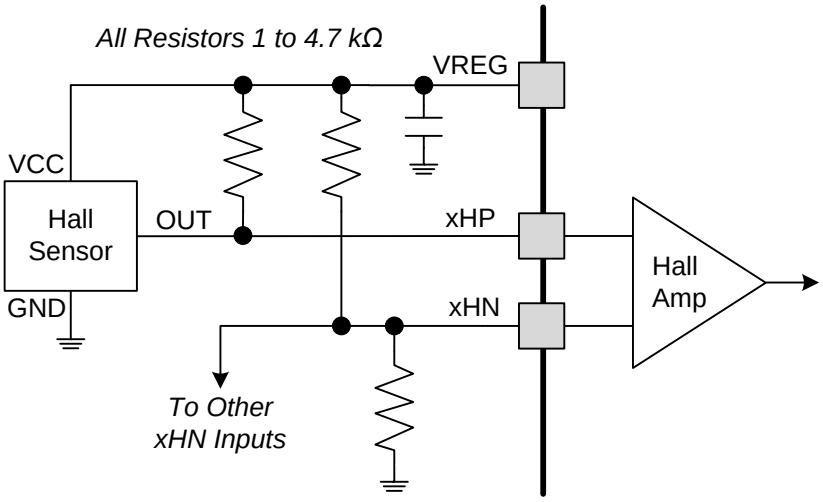

Figure 26. Hall Resistors

The negative (xHN) inputs are biased to 2.5 V by a pair of resistors between VREG and ground. For open-collector Hall sensors, an additional pullup resistor to VREG is needed on the positive (xHP) input. Again, the VREG output can usually be used to supply power to the Hall sensors.

8.1.3 FG Amplifier Configurations and Connections

To improve speed control by providing a higher bandwidth speed feedback, often a magnetic pickup coil, commonly referred to as an FG generator, is used. This is typically implemented as a serpentine PCB trace on the motor PCB. This generates a low-level sine wave signal whose amplitude and frequency is proportional to the speed of the motor.

Copyright © 2014–2017, Texas Instruments Incorporated

Application Information (continued)

Since the FG trace is in close proximity to the motor coils, it is very susceptible to noise coupling from the PWM of the motor. Noise coupling into the FG circuit causes poor speed regulation, especially at low motor speeds. Startup is a particularly difficult situation, as the motor current is at a maximum, and the FG signal amplitude is low (in fact, 0 at the moment of startup). If noise couples into FG during startup, the speed loop interprets the noise as fast motor rotation, and lowers the PWM duty cycle. The result is slow startup of the motor. If this problem is suspected, looking at the FGOUT signal with an oscilloscope during startup should reveal it.

To address this, in addition to the resistors that set the gain of the FG amplifier (R1 and R2 in Figure 27), usually passive filter components are needed on the FG amplifier circuit.

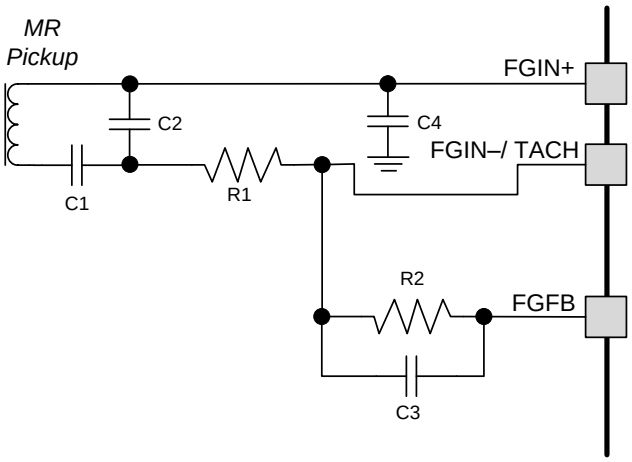

Figure 27. FG Amplifier Circuit

Ideally, the user desires a large amount of rejection of the PWM frequency. However, the user needs to pass the frequency that corresponds to their fastest motor speed. As an example, a motor may put out 36 FG pulses per revolution. At 5000 RPM, this is a 3-kHz signal. If you operate the PWM at 25 kHz, you can set a single pole at 3 kHz and have significant rejection of the PWM frequency, and the higher harmonics of the PWM (which are typically more easily coupled) are rejected even more.

Because the amplitude of the FG signal also increases with higher motor speed, it is possible to set this pole at a much lower frequency than the maximum speed dictates. The optimal values need to be determined by testing on the actual motor.

This pole is set by C3 in Figure 27.

In addition to rejection of high frequency, the FG winding should be AC-coupled to the amplifier to prevent any issues with DC offsets. This capacitor (C1) must be large enough to allow the motor to start-up reliably, since the FG frequency and amplitude are very low at startup. Typically capacitors on the order of 100 nF to 1 µF are used here. The voltage is low, so a 6.3-V ceramic capacitor can be used.

Occasionally an additional small capacitor is used across the FG trace. This capacitor (C2 above) may not be needed, but it can help reject very high-frequency harmonics of the PWM (glitches). Capacitors between 330 and 2200 pF are typically used.

Copyright © 2014–2017, Texas Instruments Incorporated

8.2 Typical Application

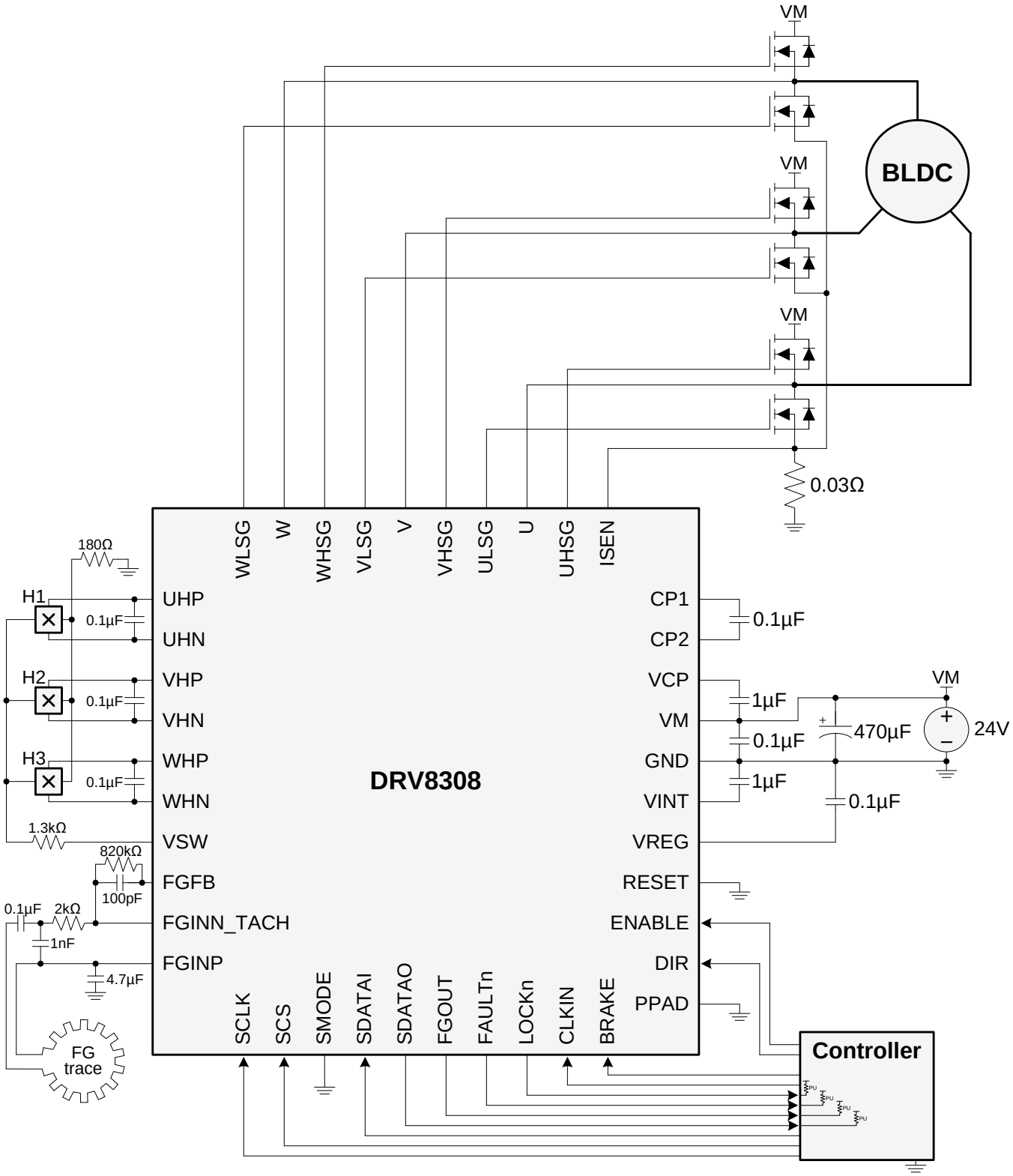

Figure 28. Typical Application

Copyright © 2014–2017, Texas Instruments Incorporated

Typical Application (continued)

8.2.1 Design Requirements

This section describes design considerations.

DESIGN PARAMETER	REFERENCE	EXAMPLE VALUE
Motor voltage	V_M	24V
Motor current (peak and RMS)	I_M	10A peak, 3A RMS
Speed command method	speed	Closed-loop at 3000 RPM
Required flutter (speed jitter)	flutter	< 0.2%
Configuration method	config	Use OTP
Hall element current	I_{HALL}	7mA
Power FET switching time	t_{FET}	500ns

8.2.2 Detailed Design Procedure

8.2.2.1 Motor voltage

BLDC motors are typically rated for a certain voltage. Higher voltages generally have the advantage of causing current to change faster through the inductive windings, which allows for higher RPMs. And for a given required power delivery (torque * speed), higher voltage allows for lower current.

8.2.2.2 Motor Current (Peak and RMS)

It is important to understand and control motor current. This affects power FET device selection, the amount of required bulk capacitance, and the sizing of the sense resistor for the DRV8308 current-limiter feature.

With BLDC motors, increasing the load torque increases current. For a fixed load, the current during motor spin-up is the highest. It is generally a good idea to limit spin-up current by sizing sense resistors appropriately, because if it's not limited, a motor can consume many amperes during startup and cause VM to droop unless a large amount of bulk capacitance is used. Limiting current reduces the bulk capacitance required.

The DRV8308 $V_{LIMITER}$ trips at 0.25V. If the sense resistance is 0.025Ω for example, 10A will be required to raise the ISEN voltage above 0.25V. When this happens, the DRV8308 drives the external FETs with a shorter duty cycle to limit current below 10A.

When selecting the power FET device, key parameters to consider are:

- It must be N-channel type, and 6 are needed.
- The max drain current (I_D); pulsed and continuous.
- Max V_{DS} must be greater than V_M.
- Max V_{GS} must be at least 12V (the DRV8308 drives approximately 10V).
- $R_{DS(ON)}$ – lower values decrease device temperature.

8.2.2.3 Speed Command Method

The DRV8308 can drive BLDCs using an open-loop 0% to 100% command, or using closed-loop speed control. When using closed-loop, the correct reference clock frequency (on CLKIN) must be calculated.

If DRV8308 register FGSEL is set to 00b to use Hall U to sense motor speed,

$$f_{CLKIN} = RPM / 60 * (N_{POLES} / 2) \quad (5)$$

N_{POLES} is the number of permanent magnet poles.

If DRV8308 register FGSEL is set to 10b to use FG to sense motor speed,

$$f_{CLKIN} = RPM / 60 * N_{FG} \quad (6)$$

N_{FG} is the number of FG cycles per motor revolution.

8.2.2.4 Required Flutter (Speed Jitter)

Flutter is a measure of motor speed consistency. The best possible flutter largely depends on motor characteristics, loading, and tuning of the DRV8308 registers. BLDC motors with high detent torque and discrete positions will have higher flutter. The *DRV8308EVM User's Guide* SLVUA41 describes the important registers and a tuning process.

8.2.2.5 Configuration Method

The DRV8308 must have its registers set in order to function. There are 3 methods:

1. Pre-program an external EEPROM, and set pin SMODE High.
2. Set pin SMODE Low, and write register data over SPI while the DRV8308 is powered.
3. Set pin SMODE Low, write register data over SPI while the DRV8308 is powered, and burn it to the internal EPROM (OTP). Then on future power ups, the DRV8308 will load the custom configuration data.

If the DRV8308 will be used in an open-loop PWM mode, the following register settings provide good baseline settings:

ADDRESS	VALUE
0x00	0x0911
0x01	0x0000
0x02	0x04FF
0x03	0x6800
0x04	0x40D2
0x05	0x0000
0x06	0x0000
0x07	0x0000
0x08	0x0000
0x09	0x0000
0x0A	0xF000
0x0B	0x0000

8.2.2.6 Hall Element Current

Hall elements output a differential voltage that is proportional to the amount of bias current. An absolute max current is specified, as well as the element resistance over temperature.

The DRV8308 regulated outputs VREG or VSW can be used to supply Hall element current, along with a series resistor to limit element current. Its sizing depends on the element equivalent resistance (they can be arranged in parallel or serial), and the VM voltage if VSW is used.

8.2.2.7 Power FET Switching Time

The switching time on the external FETs is the V_{GS} rise time, and it can be easily controlled with DRV8308 register IDRIVE. The 10mA setting causes a switching time that is 5 times the 50mA setting. Larger FETs that have higher current capabilities have a larger gate charge (Q_g), and require higher IDRIVE settings for reasonable switching times.

However, fast switching times can cause extra voltage noise on VM and GND. This can be especially due to a relatively slow reverse-recovery time of the low-side body diode, where it conducts reverse-bias momentarily, being similar to shoot-through. To minimize noise, lower IDRIVE settings are often beneficial, and the 10mA setting has worked well with many types of FETs operating below 5A.

Copyright © 2014–2017, Texas Instruments Incorporated

8.2.3 Application Curves

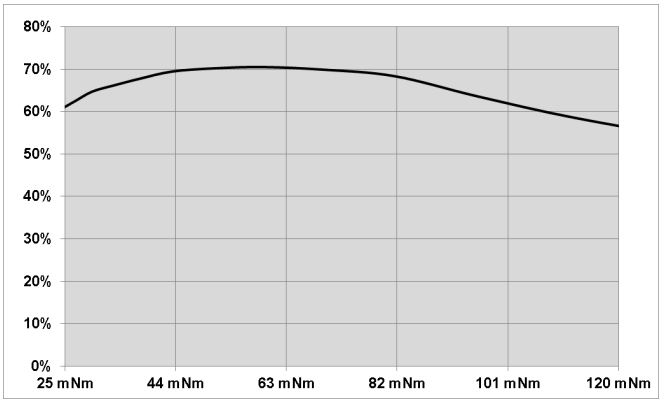

Figure 29. Closed-loop Efficiency vs Torque

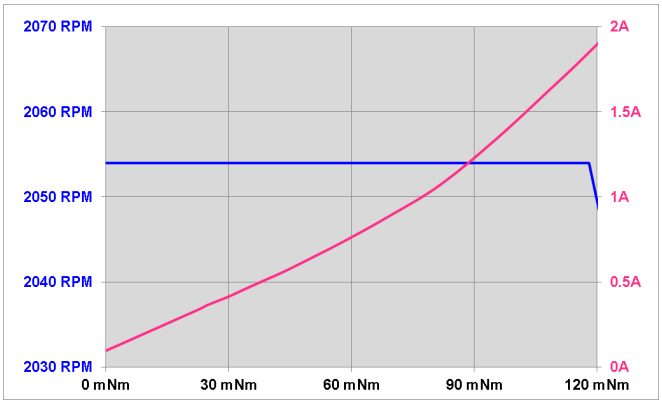

Figure 30. Closed-loop RPM and Current vs Torque

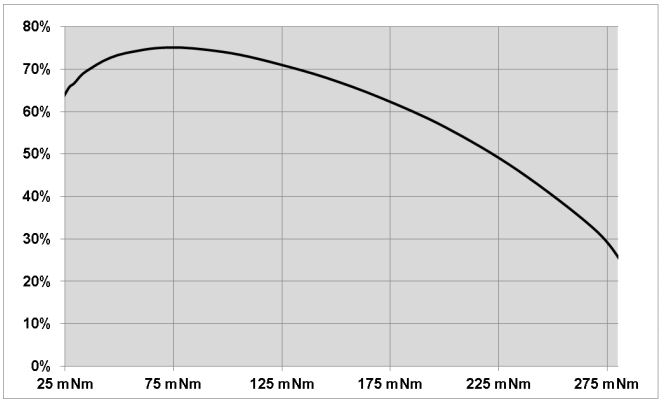

Figure 31. Open-loop Efficiency vs Torque

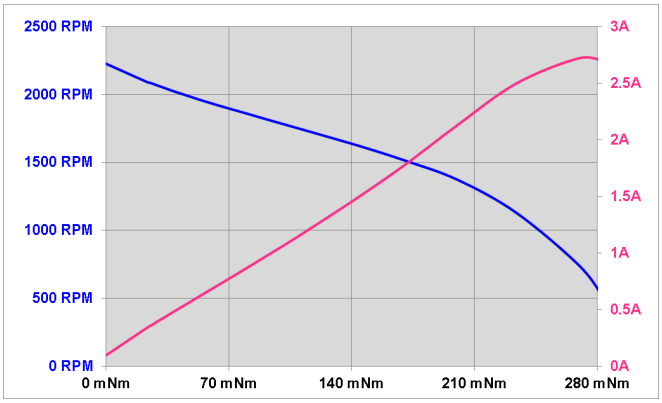

Figure 32. Open-loop RPM and Current vs Torque

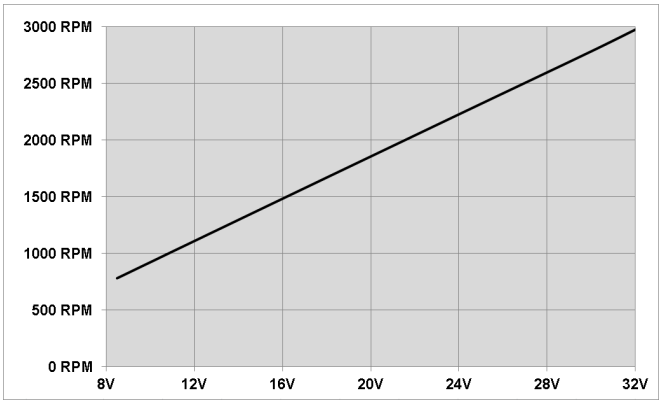

Figure 33. Open-loop RPM vs Voltage

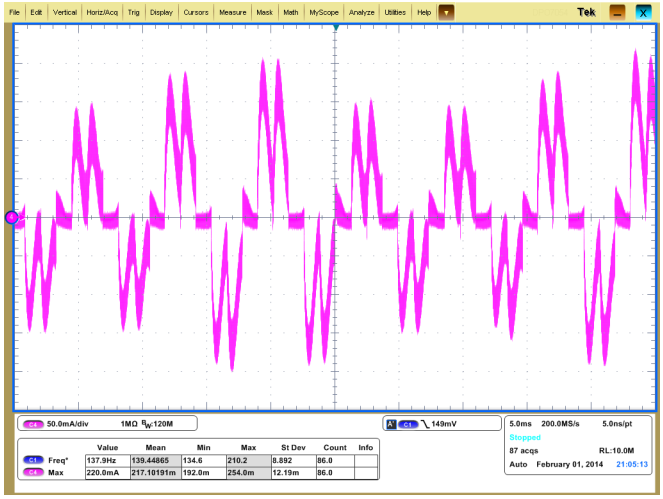

Figure 34. Phase Current with 120 Degrees Mode

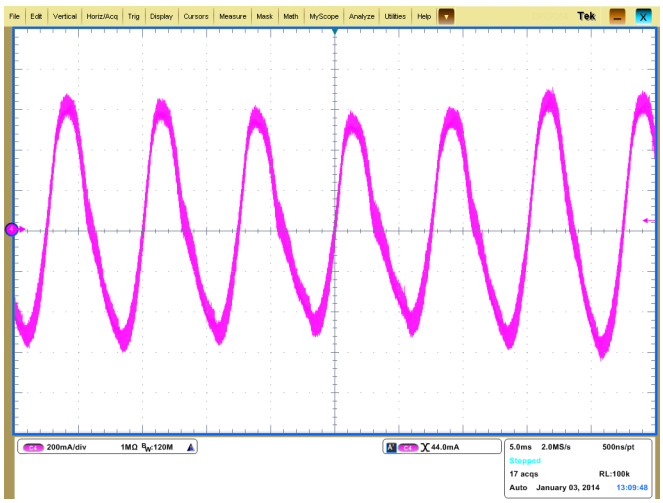

Figure 35. Phase Current with Sine Mode

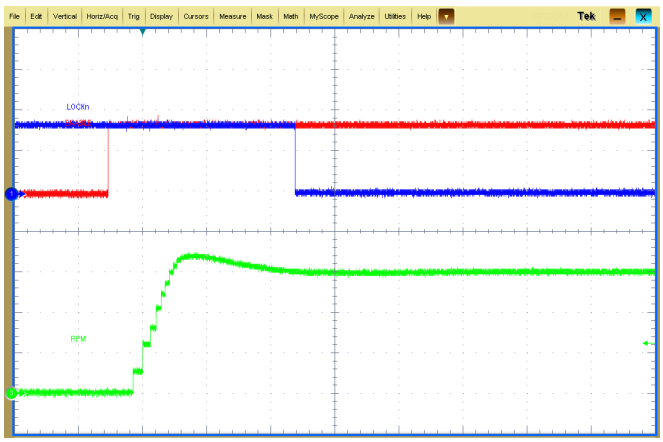

Figure 36. Startup

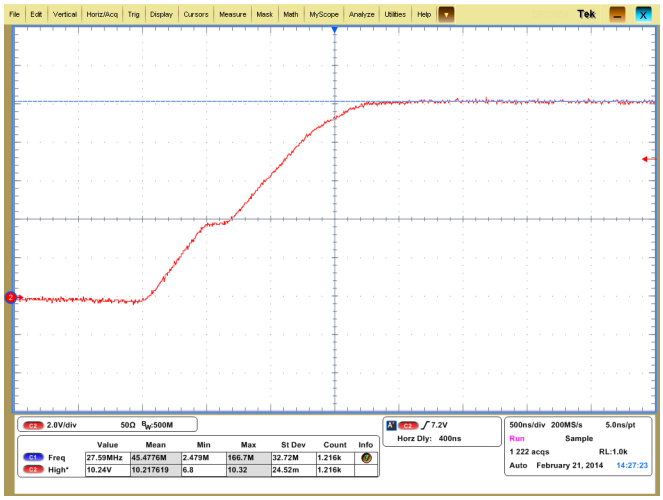

Figure 37. V_{gs} with I_{DRIVE} = 10mA

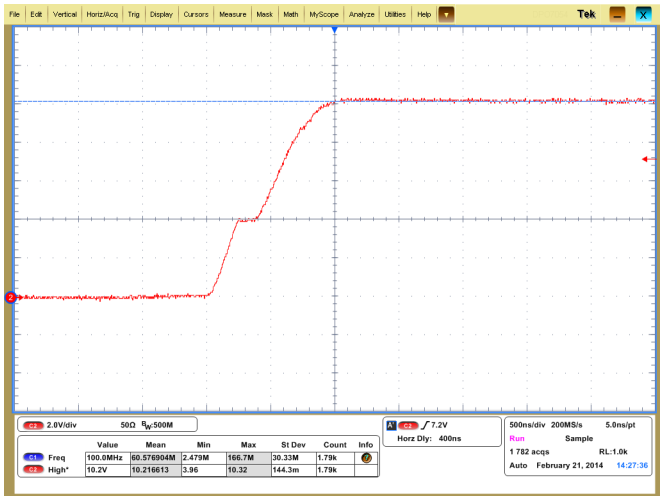

Figure 38. V_{gs} with I_{DRIVE} = 20mA

Copyright © 2014–2017, Texas Instruments Incorporated

8.3 Do's and Don'ts

8.3.1 RESET and ENABLE Considerations

Since the ENABLE function doubles as a sleep (low-power shutdown) function, there are some important considerations when asserting and deasserting ENABLE and RESET.

While the motor driver is enabled, the deassertion of ENABLE initiates a stop-and-power-down sequence. This sequence starts by disabling the motor (either braking or coasting depending on the BRKMOD bit), and waiting for rotation to stop. After rotation is stopped for 1 s (as determined by the absence of transitions on FGOUT), the internal circuitry is powered-down, the V5 regulator and power switch are disabled, and internal clocks are stopped.

In this low-power sleep state, the serial interface may still be used to read or write registers. All other logic is disabled.

After this stop-and-power-down sequence has been initiated (by deasserting the ENABLE pin for at least 1.2 µs, or by changing the state of the ENPOL bit), the sequence continues to completion, regardless of the state of ENABLE. If ENABLE is immediately returned to the active state, the motor slows and stops for 1 s, at which point it starts again.

If RESET is asserted during power-down (at any time after the deassertion of ENABLE is recognized), it is acted upon when ENABLE is again asserted, and the part powers-up.

If RESET is asserted when ENABLE is active, the motor is stopped similar to the sequence when ENABLE is deasserted. After it is stopped for 1 s, all internal registers are reloaded with the value contained in OTP memory, faults are cleared, and internal states (that is, the speed loop datapath) are initialized. The motor remains disabled until RESET is deasserted.

RESET and ENABLE may be connected together (if the ENPOL bit in OTP memory is programmed so that ENABLE is active low). When both signals are low, the motor is enabled; when both signals are high, the motor is disabled. As soon as the signals are returned to high, all registers are reloaded from OTP memory, faults are cleared, and the motor starts.

Copyright © 2014–2017, Texas Instruments Incorporated

9 Power Supply Recommendations

The DRV8308 device is designed to operate from an input voltage supply range between 8.5 and 32 V. This supply should be well regulated. A minimum bulk capacitance of 47-µF should be used to stabilize the motor voltage.

10 Layout

10.1 Layout Guidelines

For VM, place a 0.1-µF bypass capacitor close to the device. Take care to minimize the loop formed by the bypass capacitor connection from VM to GND. Refer to the DRV8308EVM evaluation board for good layout practices.

10.2 Layout Example

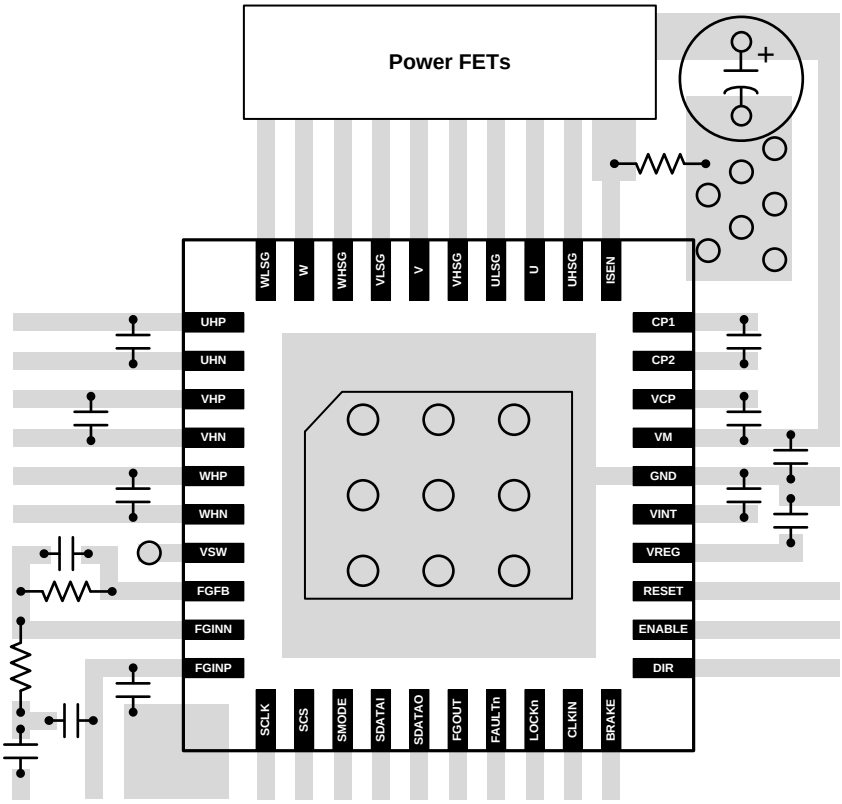

Figure 39. Layout Example

版权 © 2014–2017, Texas Instruments Incorporated

11 器件和文档支持

11.1 文档支持

11.1.1 相关文档

请参阅如下相关文档：

- 德州仪器 (TI)，*《DRV8308 用户指南》*
- 德州仪器 (TI)，*《使用 BLDC 电机的高效真空吸尘器硬件设计注意事项》应用报告*
- 德州仪器 (TI)，*《了解 TI 电机栅极驱动器中的 IDRIVE 和 TDRIVE》*应用报告

11.2 接收文档更新通知

要接收文档更新通知，请导航至 TI.com 上的器件产品文件夹。单击右上角的*通知我* 进行注册，即可每周接收产品信息更改摘要。有关更改的详细信息，请查看任何已修订文档中包含的修订历史记录。

11.3 社区资源

下列链接提供到 TI 社区资源的连接。链接的内容由各个分销商"按照原样"提供。这些内容并不构成 TI 技术规范，并且不一定反映 TI 的观点；请参阅 TI 的 《使用条款》。

TI E2E™ 在线社区 ***TI 的工程师对工程师 (E2E) 社区。***此社区的创建目的在于促进工程师之间的协作。在 e2e.ti.com 中，您可以咨询问题、分享知识、拓展思路并与同行工程师一道帮助解决问题。

设计支持 ***TI 参考设计支持*** 可帮助您快速查找有帮助的 E2E 论坛、设计支持工具以及技术支持的联系信息。

11.4 商标

E2E is a trademark of Texas Instruments.
All other trademarks are the property of their respective owners.

11.5 静电放电警告

ESD 可能会损坏该集成电路。德州仪器 (TI) 建议通过适当的预防措施处理所有集成电路。如果不遵守正确的处理措施和安装程序，可能会损坏集成电路。

ESD 的损坏小至导致微小的性能降级，大至整个器件故障。 精密的集成电路可能更容易受到损坏，这是因为非常细微的参数更改都可能会导致器件与其发布的规格不相符。

11.6 Glossary

SLYZ022 — *TI Glossary*.

This glossary lists and explains terms, acronyms, and definitions.

12 机械、封装和可订购信息

以下页中包括机械封装、封装和可订购信息。这些信息是针对指定器件可提供的最新数据。数据如有变更，恕不另行通知和修订此文档。如欲获取此产品说明书的浏览器版本，请参阅左侧的导航。

PACKAGING INFORMATION

Orderable part number	Status (1)	Material type (2)	Package | Pins	Package qty | Carrier	RoHS (3)	Lead finish/ Ball material (4)	MSL rating/ Peak reflow (5)	Op temp (°C)	Part marking (6)
DRV8308RHAR	Active	Production	VQFN (RHA) | 40	2500 | LARGE T&R	Yes	NIPDAU	Level-3-260C-168 HR	-40 to 85	DRV8308
DRV8308RHAR.A	Active	Production	VQFN (RHA) | 40	2500 | LARGE T&R	Yes	NIPDAU	Level-3-260C-168 HR	-40 to 85	DRV8308
DRV8308RHARG4	Active	Production	VQFN (RHA) | 40	2500 | LARGE T&R	Yes	NIPDAU	Level-3-260C-168 HR	-40 to 85	DRV8308
DRV8308RHARG4.A	Active	Production	VQFN (RHA) | 40	2500 | LARGE T&R	Yes	NIPDAU	Level-3-260C-168 HR	-40 to 85	DRV8308
DRV8308RHAT	Active	Production	VQFN (RHA) | 40	250 | SMALL T&R	Yes	NIPDAU	Level-3-260C-168 HR	-40 to 85	DRV8308
DRV8308RHAT.A	Active	Production	VQFN (RHA) | 40	250 | SMALL T&R	Yes	NIPDAU	Level-3-260C-168 HR	-40 to 85	DRV8308

(1) **Status:** For more details on status, see our product life cycle.

(2) **Material type:** When designated, preproduction parts are prototypes/experimental devices, and are not yet approved or released for full production. Testing and final process, including without limitation quality assurance, reliability performance testing, and/or process qualification, may not yet be complete, and this item is subject to further changes or possible discontinuation. If available for ordering, purchases will be subject to an additional waiver at checkout, and are intended for early internal evaluation purposes only. These items are sold without warranties of any kind.

(3) **RoHS values:** Yes, No, RoHS Exempt. See the TI RoHS Statement for additional information and value definition.

(4) **Lead finish/Ball material:** Parts may have multiple material finish options. Finish options are separated by a vertical ruled line. Lead finish/Ball material values may wrap to two lines if the finish value exceeds the maximum column width.

(5) **MSL rating/Peak reflow:** The moisture sensitivity level ratings and peak solder (reflow) temperatures. In the event that a part has multiple moisture sensitivity ratings, only the lowest level per JEDEC standards is shown. Refer to the shipping label for the actual reflow temperature that will be used to mount the part to the printed circuit board.

(6) **Part marking:** There may be an additional marking, which relates to the logo, the lot trace code information, or the environmental category of the part.

Multiple part markings will be inside parentheses. Only one part marking contained in parentheses and separated by a "~" will appear on a part. If a line is indented then it is a continuation of the previous line and the two combined represent the entire part marking for that device.

Important Information and Disclaimer: The information provided on this page represents TI's knowledge and belief as of the date that it is provided. TI bases its knowledge and belief on information provided by third parties, and makes no representation or warranty as to the accuracy of such information. Efforts are underway to better integrate information from third parties. TI has taken and continues to take reasonable steps to provide representative and accurate information but may not have conducted destructive testing or chemical analysis on incoming materials and chemicals. TI and TI suppliers consider certain information to be proprietary, and thus CAS numbers and other limited information may not be available for release.

In no event shall TI's liability arising out of such information exceed the total purchase price of the TI part(s) at issue in this document sold by TI to Customer on an annual basis.

TAPE AND REEL INFORMATION

REEL DIMENSIONS

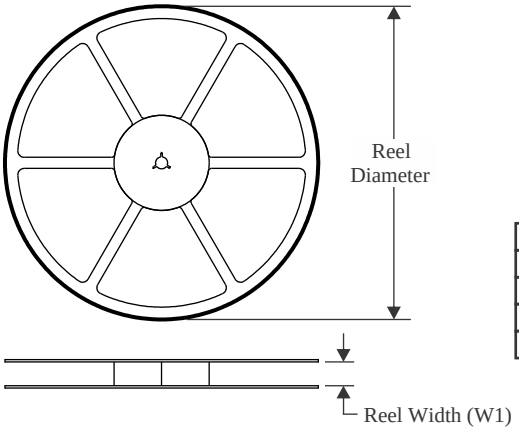

TAPE DIMENSIONS

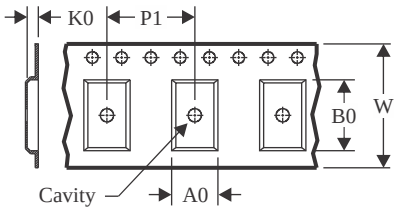

A0	Dimension designed to accommodate the component width
B0	Dimension designed to accommodate the component length
K0	Dimension designed to accommodate the component thickness
W	Overall width of the carrier tape
P1	Pitch between successive cavity centers

QUADRANT ASSIGNMENTS FOR PIN 1 ORIENTATION IN TAPE

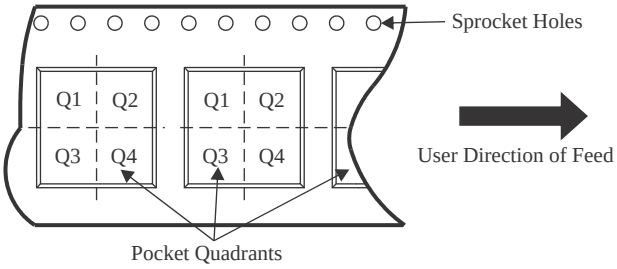

*All dimensions are nominal

Device	Package Type	Package Drawing	Pins	SPQ	Reel Diameter (mm)	Reel Width W1 (mm)	A0 (mm)	B0 (mm)	K0 (mm)	P1 (mm)	W (mm)	Pin1 Quadrant
DRV8308RHAR	VQFN	RHA	40	2500	330.0	16.4	6.3	6.3	1.1	12.0	16.0	Q2
DRV8308RHARG4	VQFN	RHA	40	2500	330.0	16.4	6.3	6.3	1.1	12.0	16.0	Q2
DRV8308RHAT	VQFN	RHA	40	250	180.0	16.4	6.3	6.3	1.1	12.0	16.0	Q2

TAPE AND REEL BOX DIMENSIONS

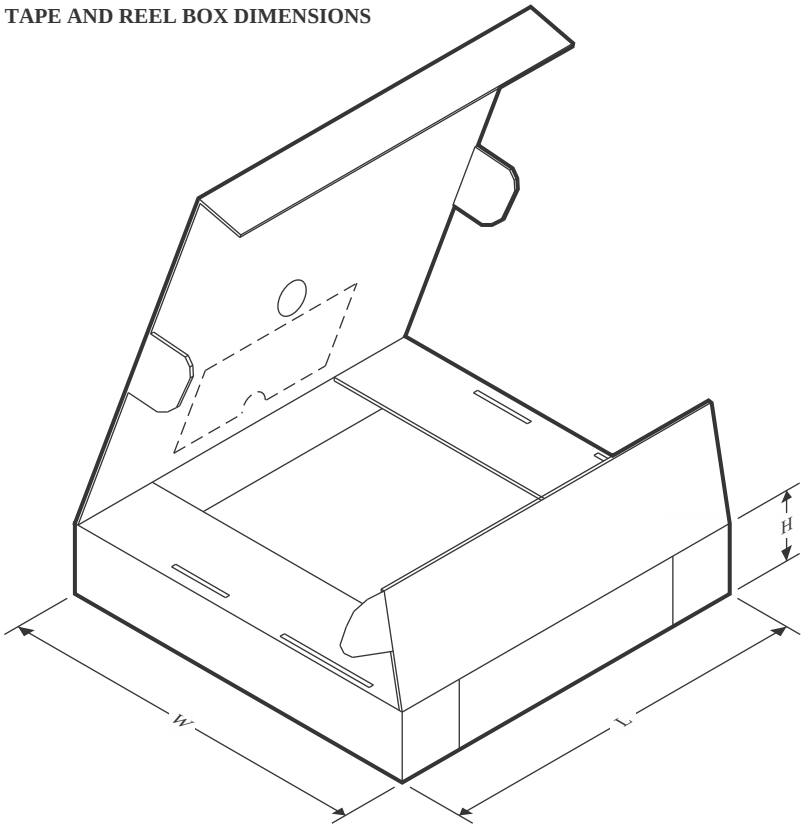

*All dimensions are nominal

Device	Package Type	Package Drawing	Pins	SPQ	Length (mm)	Width (mm)	Height (mm)
DRV8308RHAR	VQFN	RHA	40	2500	367.0	367.0	38.0
DRV8308RHARG4	VQFN	RHA	40	2500	367.0	367.0	38.0
DRV8308RHAT	VQFN	RHA	40	250	210.0	185.0	35.0

GENERIC PACKAGE VIEW

RHA 40

VQFN - 1 mm max height

6 x 6, 0.5 mm pitch

PLASTIC QUAD FLATPACK - NO LEAD

This image is a representation of the package family, actual package may vary.
Refer to the product data sheet for package details.

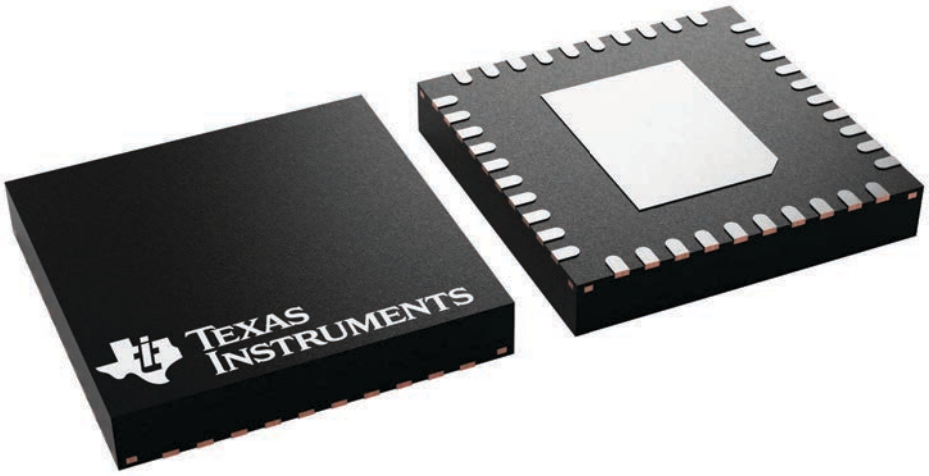

4225870/A

PACKAGE OUTLINE

RHA0040E

VQFN - 1 mm max height

PLASTIC QUAD FLATPACK - NO LEAD

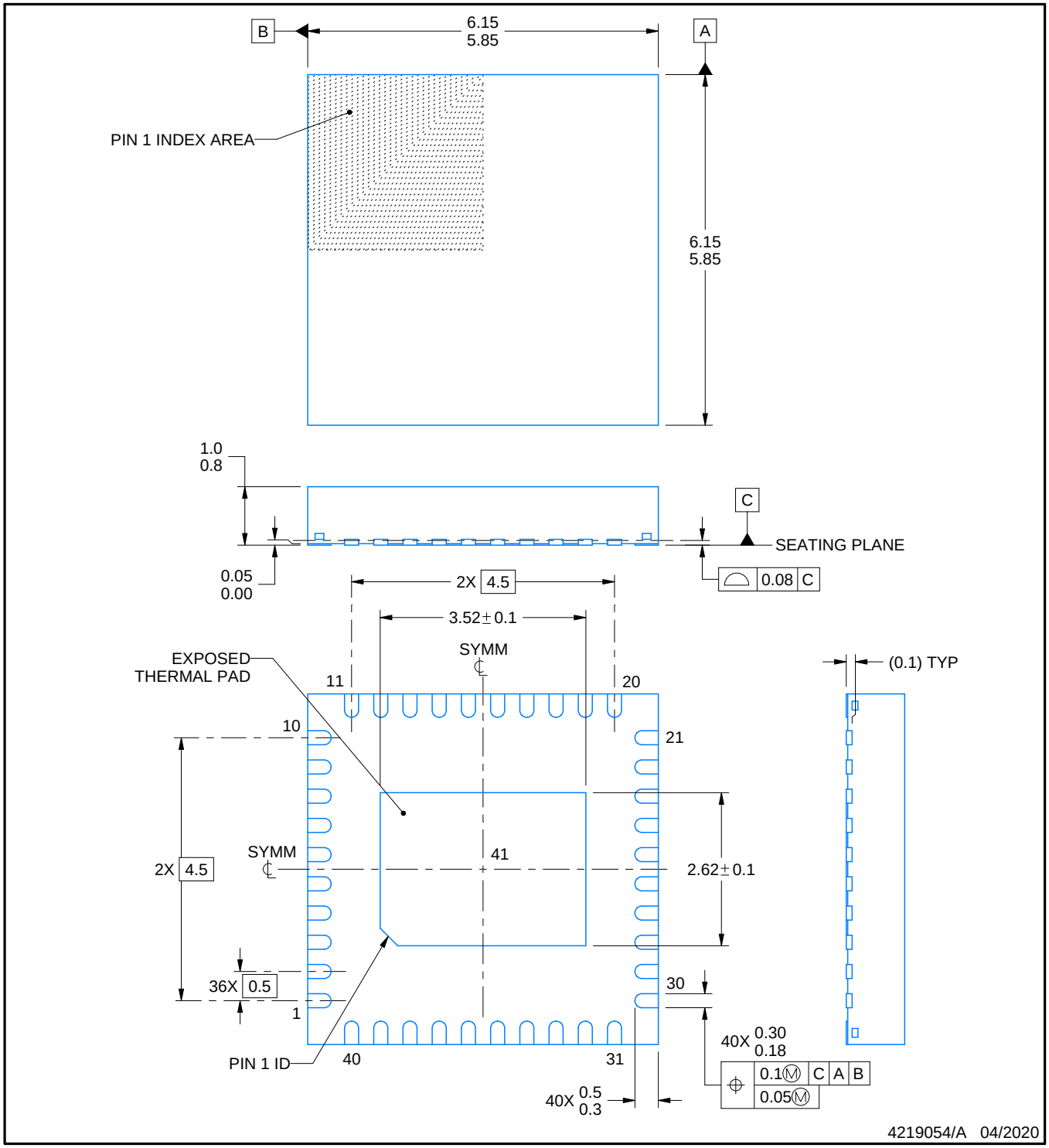

NOTES:

1. All linear dimensions are in millimeters. Any dimensions in parenthesis are for reference only. Dimensioning and tolerancing per ASME Y14.5M.
2. This drawing is subject to change without notice.
3. The package thermal pad must be soldered to the printed circuit board for thermal and mechanical performance.

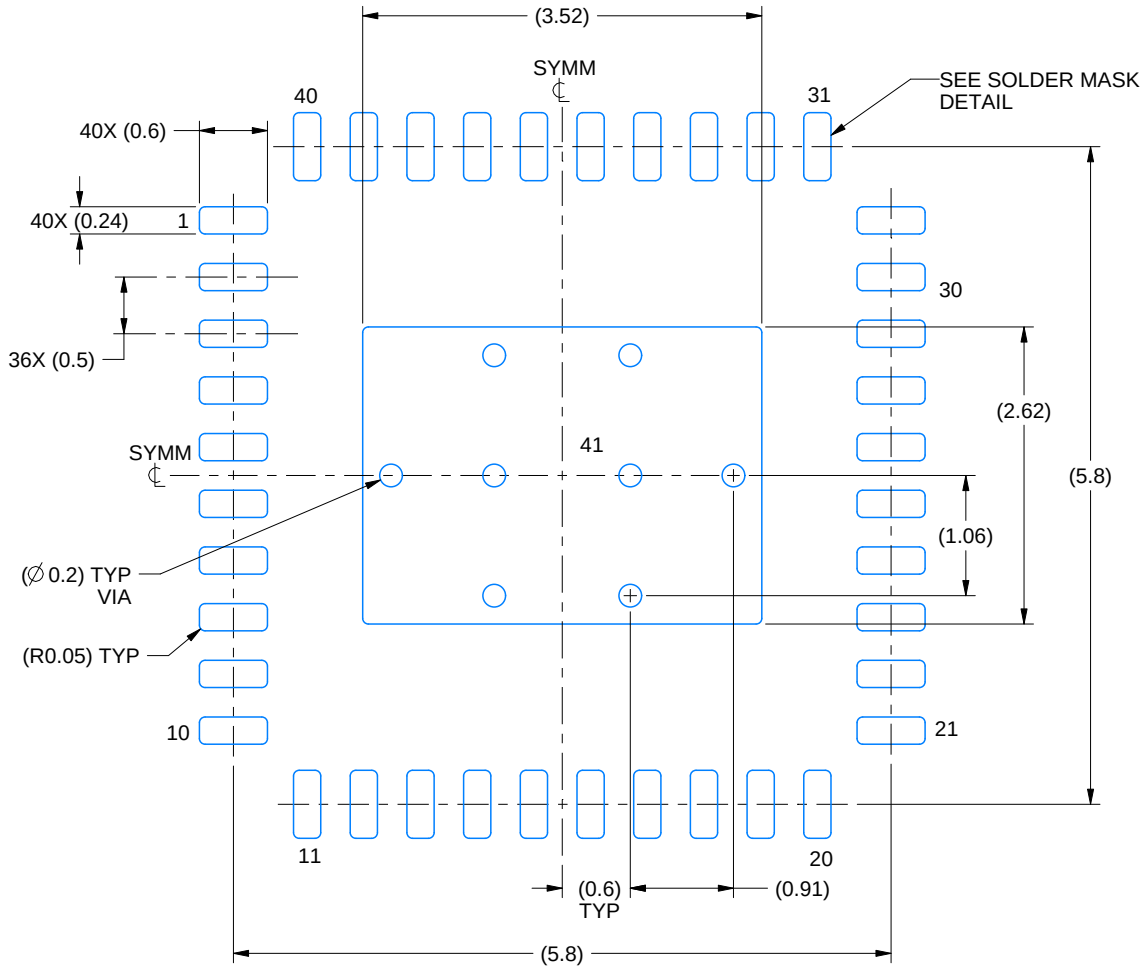

LAND PATTERN EXAMPLE
EXPOSED METAL SHOWN
SCALE: 15X

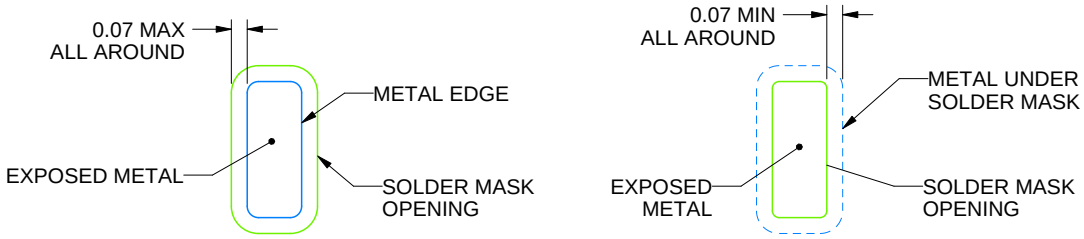

NON SOLDER MASK DEFINED (PREFERRED)

SOLDER MASK DEFINED

SOLDER MASK DETAILS

4219054/A 04/2020

NOTES: (continued)

4. This package is designed to be soldered to a thermal pad on the board. For more information, see Texas Instruments literature number SLUA271 (www.ti.com/lit/slua271).
5. Vias are optional depending on application, refer to device data sheet. If any vias are implemented, refer to their locations shown on this view. It is recommended that vias under paste be filled, plugged or tented.

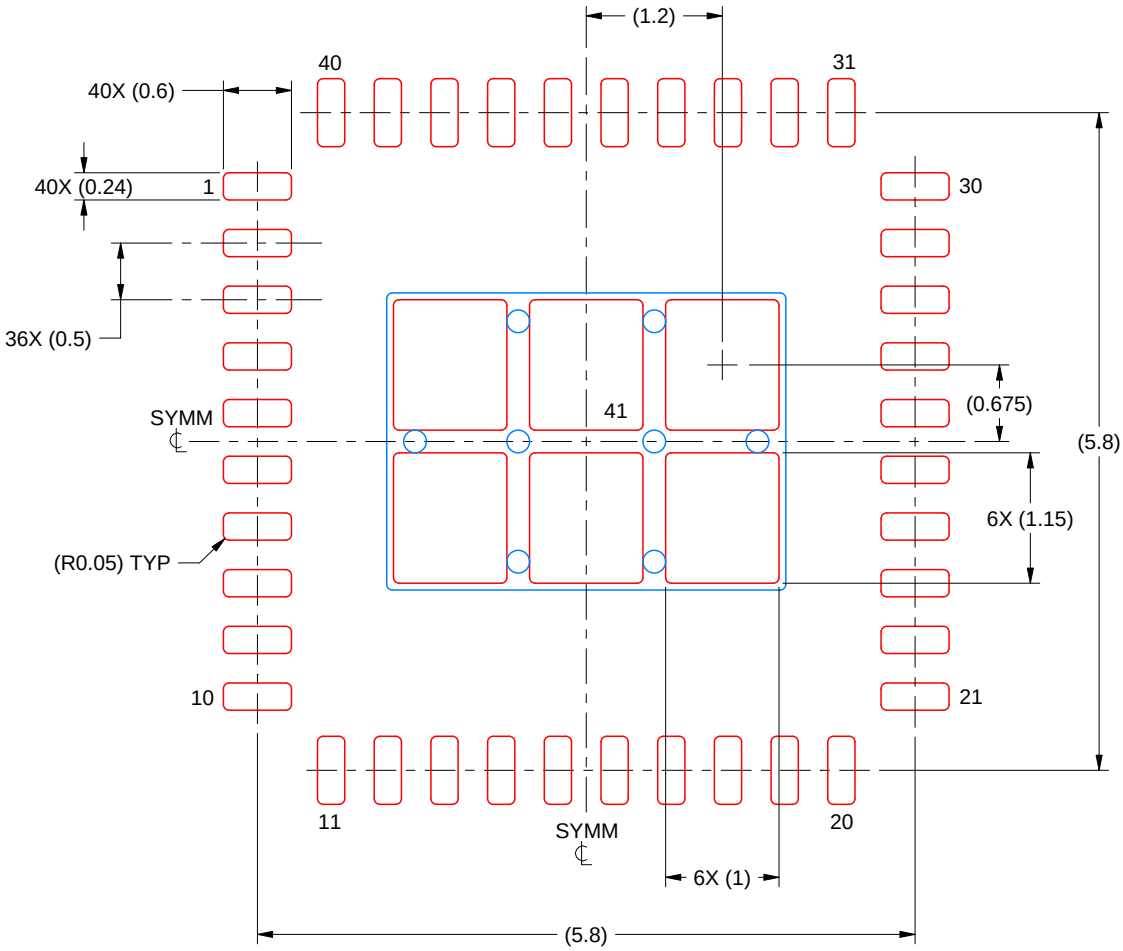

SOLDER PASTE EXAMPLE
BASED ON 0.125 MM THICK STENCIL
SCALE: 15X

EXPOSED PAD 41
75% PRINTED SOLDER COVERAGE BY AREA UNDER PACKAGE

4219054/A 04/2020

NOTES: (continued)

6. Laser cutting apertures with trapezoidal walls and rounded corners may offer better paste release. IPC-7525 may have alternate design recommendations.

重要通知和免责声明

TI“按原样”提供技术和可靠性数据（包括数据表）、设计资源（包括参考设计）、应用或其他设计建议、网络工具、安全信息和其他资源，不保证没有瑕疵且不做出任何明示或暗示的担保，包括但不限于对适销性、与某特定用途的适用性或不侵犯任何第三方知识产权的暗示担保。

这些资源可供使用 TI 产品进行设计的熟练开发人员使用。您将自行承担以下全部责任：(1) 针对您的应用选择合适的 TI 产品，(2) 设计、验证并测试您的应用，(3) 确保您的应用满足相应标准以及任何其他安全、安保法规或其他要求。

这些资源如有变更，恕不另行通知。TI 授权您仅可将这些资源用于研发本资源所述的 TI 产品的相关应用。严禁以其他方式对这些资源进行复制或展示。您无权使用任何其他 TI 知识产权或任何第三方知识产权。对于因您对这些资源的使用而对 TI 及其代表造成的任何索赔、损害、成本、损失和债务，您将全额赔偿，TI 对此概不负责。

TI 提供的产品受 TI 销售条款)、TI 通用质量指南 或 ti.com 上其他适用条款或 TI 产品随附的其他适用条款的约束。TI 提供这些资源并不会扩展或以其他方式更改 TI 针对 TI 产品发布的适用的担保或担保免责声明。 除非德州仪器 (TI) 明确将某产品指定为定制产品或客户特定产品，否则其产品均为按确定价格收入目录的标准通用器件。

TI 反对并拒绝您可能提出的任何其他或不同的条款。

版权所有 © 2026，德州仪器 (TI) 公司

最后更新日期：2025 年 10 月