DLP160AP 0.16 QnHD DMD

1 特性

- 超紧凑 0.16-inch (3.965-mm) 对角线微镜阵列
  - 显示器 320 × 180 分辨率
  - 5.4µm 微镜间距
  - 17° 微镜倾斜（相对于平坦表面）
  - 采用侧面照明，实现最优的效率和光学引擎尺寸
  - 偏振无关型铝微镜表面
- 4 位 SubLVDS 输入数据总线
- 专用 DLPC3420 显示控制器和 DLPA2000 或 DLPA2005 PMIC/LED 驱动器，确保可靠运行

2 应用

- 显示：
  - 超高移动性、超低功耗 Pico 投影仪
  - 手机、平板电脑和笔记本电脑
  - 智能显示
  - 智能家居
  - 增强现实眼镜
  - 信息显示

3 说明

DLP160AP 数字微镜器件 (DMD) 是一款数控微光机电系统 (MOEMS) 空间照明调制器 (SLM)。当与适当的光学系统耦合连接时，DLP160AP DMD 可显示非常清晰的高质量图像或视频。DLP160AP 是由 DLP160AP DMD 和 DLPC3420 控制器所组成的芯片组的一部分。DLPA2000 or DLPA2005 PMIC/LED 驱动器也支持此芯片组。DLP160AP 外形小巧，非常适合注重小尺寸和低功耗的便携设备。紧凑型 DLP160AP DMD 与控制器和 PMIC/LED 驱动器共同组成完整的系统解决方案，可实现小巧外形、低功耗以及高画质显示。

器件信息

器件型号	封装(1)	封装尺寸（标称值）
DLP160AP	FQT (35)	13.39 mm × 4.97 mm × 3.18 mm

(1) 如需了解所有可用封装，请参阅数据表末尾的可订购产品附录。

简化版应用

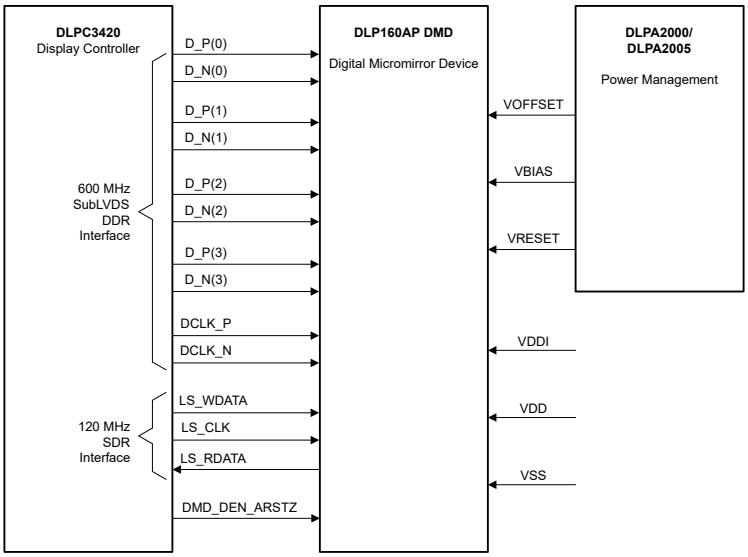

本文档旨在为方便起见，提供有关 TI 产品中文版本的信息，以确认产品的概要。有关适用的官方英文版本的最新信息，请访问 www.ti.com，其内容始终优先。TI 不保证翻译的准确性和有效性。在实际设计之前，请务必参考最新版本的英文版本。

Table of Contents

1 特性.... 1
2 应用.... 1
3 说明.... 1
4 Revision History.... 2
5 Pin Configuration and Functions.... 3
6 Specifications.... 6
6.1 Absolute Maximum Ratings.... 6
6.2 Storage Conditions.... 6
6.3 ESD Ratings.... 7
6.4 Recommended Operating Conditions.... 7
6.5 Thermal Information.... 10
6.6 Electrical Characteristics.... 10
6.7 Timing Requirements.... 11
6.8 Switching Characteristics.... 16
6.9 System Mounting Interface Loads.... 17
6.10 Micromirror Array Physical Characteristics.... 18
6.11 Micromirror Array Optical Characteristics.... 19
6.12 Window Characteristics.... 21
6.13 Chipset Component Usage Specification.... 21
7 Detailed Description.... 22
7.1 Overview.... 22
7.2 Functional Block Diagram.... 22
7.3 Feature Description.... 23
7.4 Device Functional Modes.... 23
7.5 Optical Interface and System Image Quality Considerations.... 23
7.6 Micromirror Array Temperature Calculation.... 24
7.7 Micromirror Power Density Calculation.... 25
7.8 Micromirror Landed-On/Landed-Off Duty Cycle.... 27
8 Application and Implementation.... 31
8.1 Application Information.... 31
8.2 Typical Application.... 32
9 Power Supply Recommendations.... 34
9.1 Power Supply Power-Up Procedure.... 34
9.2 Power Supply Power-Down Procedure.... 34
9.3 Power Supply Sequencing Requirements.... 35
10 Layout.... 37
10.1 Layout Guidelines.... 37
10.2 Layout Example.... 37
11 Device and Documentation Support.... 38
11.1 Device Support.... 38
11.2 接收文档更新通知.... 38
11.3 支持资源.... 38
11.4 Trademarks.... 38
11.5 静电放电警告.... 39
11.6 术语表.... 39
12 Mechanical, Packaging, and Orderable Information.... 39

4 Revision History

注：以前版本的页码可能与当前版本的页码不同

Changes from Revision B (May 2022) to Revision C (July 2023) — **Page**

- Added section "ILLUMINATION" to *Recommended Operating Conditions* 7
- Updated *Micromirror Array Temperature Calculations* 24
- Added *Micromirror Power Density Calculation* 25

Changes from Revision A (November 2021) to Revision B (May 2022) — **Page**

- Updated Absolute Maximum Ratings disclosure to the latest TI standard.... 6
- Updated *Micromirror Array Optical Characteristics* 19
- Added *Third-Party Products Disclaimer* 38

Changes from Revision * (November 2021) to Revision A (January 2022) — **Page**

- 将器件状态从“预告信息”更改为“量产数据”。.... 1

Copyright © 2023 Texas Instruments Incorporated

5 Pin Configuration and Functions

图 5-1. FQT Package 35-Pin

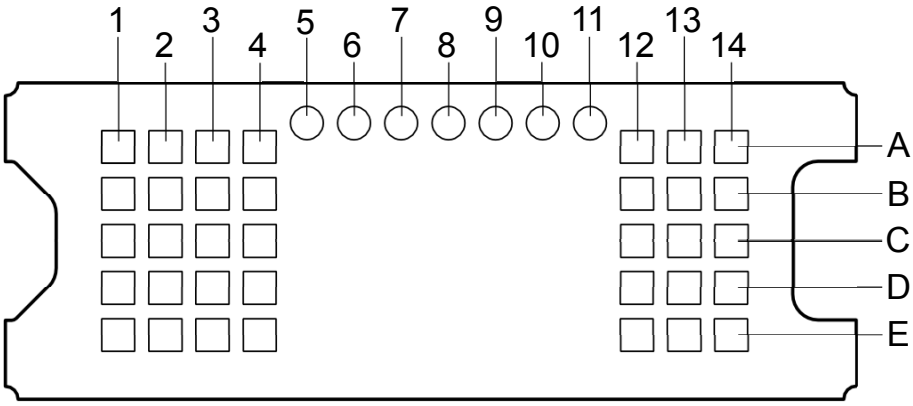

表 5-1. Connector Pins

PIN[1]						PACKAGE NET LENGTH (mm)[2]
NAME	NO.	TYPE	SIGNAL	DATA RATE	DESCRIPTION	
DATA INPUTS						
D_N(0)	A2	I	SubLVDS	Double	Data, negative	1.91
D_N(1)	A4	I	SubLVDS	Double	Data, negative	3.6
D_N(2)	D4	I	SubLVDS	Double	Data, negative	3.28
D_N(3)	E2	I	SubLVDS	Double	Data, negative	1.67
D_P(0)	A3	I	SubLVDS	Double	Data, positive	2.03
D_P(1)	B4	I	SubLVDS	Double	Data, positive	3.7
D_P(2)	E4	I	SubLVDS	Double	Data, positive	3.39
D_P(3)	E3	I	SubLVDS	Double	Data, positive	1.77
DCLK_N	C3	I	SubLVDS	Double	Clock, negative	2.29
DCLK_P	C4	I	SubLVDS	Double	Clock, positive	2.4
CONTROL INPUTS						
LS_WDATA	C12	I	LPSDR	Single	Write data for low-speed interface	1.55
LS_CLK	C13	I	LPSDR	Single	Clock for low-speed interface	1.65
DMD_DEN_ARSTZ	D12	I	LPSDR	Single	Asynchronous reset DMD signal. A low signal places the DMD in reset. A high signal releases the DMD from reset and places it in active mode.	1.57
LS_RDATA	D13	O	LPSDR	Single		1.43
POWER						
V_{BIAS} [3]	A13	Power			Supply voltage for positive bias level at micromirrors	

表 5-1. Connector Pins (continued)

PIN[1]						PACKAGE NET LENGTH (mm)[2]
NAME	NO.	TYPE	SIGNAL	DATA RATE	DESCRIPTION	
V_{OFFSET} [3]	E13	Power			Supply voltage for HVCMOS core logic. Supply voltage for stepped high level at micromirror address electrodes. Supply voltage for offset level at micromirrors.	
V_{RESET} [3]	A14	Power			Supply voltage for negative reset level at micromirrors.	
V_{DD}	B12	Power			Supply voltage for LVCMOS core logic. Supply voltage for LPSDR inputs. Supply voltage for normal high level at micromirror address electrodes.	
V_{DD}	B14	Power				
V_{DD}	C1	Power				
V_{DD}	C14	Power				
V_{DD}	C2	Power				
V_{DD}	E14	Power				
V_{DDI}	B1	Power			Supply voltage for SubLVDS receivers.	
V_{DDI}	D1	Power				
V_{SS}	A1	Ground			Common return. Ground for all power.	
V_{SS}	A12	Ground				
V_{SS}	B13	Ground				
V_{SS}	B2	Ground				
V_{SS}	B3	Ground				
V_{SS}	D14	Ground				
V_{SS}	D2	Ground				
V_{SS}	D3	Ground				
V_{SS}	E1	Ground				
V_{SS}	E12	Ground				

(1) Low speed interface is LPSDR and adheres to the Electrical Characteristics and AC/DC Operating Conditions table in JEDEC Standard No. 209B, *Low Power Double Data Rate (LPDDR)*. See JESD209B.
(2) Net trace lengths inside the package:
Relative dielectric constant for the FQP ceramic package is 9.8.
Propagation speed = 11.8 / sqrt (9.8) = 3.769 in/ns.
Propagation delay = 0.265 ns/inch = 265 ps/in = 10.43 ps/mm.
(3) The following power supplies are all required to operate the DMD: V_{DD}, V_{DDI}, V_{OFFSET}, V_{BIAS}, V_{RESET}. All V_{SS} connections are also required.

表 5-2. Test Pads

NUMBER	SYSTEM BOARD
A5	Do not connect
A6	Do not connect
A7	Do not connect
A8	Do not connect
A9	Do not connect

Copyright © 2023 Texas Instruments Incorporated

表 5-2. Test Pads (continued)

NUMBER	SYSTEM BOARD
A10	Do not connect
A11	Do not connect

6 Specifications

6.1 Absolute Maximum Ratings

see [1]

			MIN	MAX	UNIT
Supply voltage	V_{DD}	Supply voltage for LVCMOS core logic[2] Supply voltage for LPSDR low speed interface	–0.5	2.3	V
	V_{DDI}	Supply voltage for SubLVDS receivers[2]	–0.5	2.3	V
	V_{OFFSET}	Supply voltage for HVCMOS and micromirror electrode[2] [3]	–0.5	11	V
	V_{BIAS}	Supply voltage for micromirror electrode[2]	–0.5	19	V
	V_{RESET}	Supply voltage for micromirror electrode[2]	–15	0.5	V
	$\|V_{DDI}–V_{DD}\|$	Supply voltage delta (absolute value)[4]		0.3	V
	$\|V_{BIAS}–V_{OFFSET}\|$	Supply voltage delta (absolute value)[5]		11	V
	$\|V_{BIAS}–V_{RESET}\|$	Supply voltage delta (absolute value)[6]		34	V
Input voltage	Input voltage for other inputs LPSDR[2]		–0.5	V_{DD} + 0.5	V
	Input voltage for other inputs SubLVDS[2] [7]		–0.5	V_{DDI} + 0.5	V
Input pins	$\|V_{ID}\|$	SubLVDS input differential voltage (absolute value)[7]		810	mV
	I_{ID}	SubLVDS input differential current		10	mA
Clock frequency	f_{clock}	Clock frequency for low speed interface LS_CLK		130	MHz
	f_{clock}	Clock frequency for high speed interface DCLK		620	MHz
Environmental	T_{ARRAY} and T_{WINDOW}	Temperature – operational [8]	–20	90	°C
		Temperature – non-operational[8]	–40	90	°C
	$\|T_{DELTA}\|$	Absolute temperature delta between any point on the window edge and the ceramic test point TP1[9]		30	°C
	T_{DP}	Dew Point - operating and non-operating		81	°C

(1) Operation outside the Absolute Maximum Ratings may cause permanent device damage. Absolute Maximum Ratings do not imply functional operation of the device at these or any other conditions beyond those listed under Recommended Operating Conditions. If used outside the Recommended Operating Conditions but within the Absolute Maximum Ratings, the device may not be fully functional, and this may affect device reliability, functionality, performance, and shorten the device lifetime.
(2) All voltage values are with respect to the ground terminals (V_{SS}). The following power supplies are all required to operate the DMD: V_{DD}, V_{DDI}, V_{OFFSET}, V_{BIAS}, and V_{RESET}. All V_{SS} connections are also required.
(3) V_{OFFSET} supply transients must fall within specified voltages.
(4) Exceeding the recommended allowable absolute voltage difference between V_{DDI} and V_{DD} may result in excessive current draw.
(5) Exceeding the recommended allowable absolute voltage difference between V_{BIAS} and V_{OFFSET} may result in excessive current draw.
(6) Exceeding the recommended allowable absolute voltage difference between V_{BIAS} and V_{RESET} may result in excessive current draw.
(7) This maximum input voltage rating applies when each input of a differential pair is at the same voltage potential. Sub-LVDS differential inputs must not exceed the specified limit or damage may result to the internal termination resistors.
(8) The highest temperature of the active array (as calculated by the *节 7.6*) or of any point along the window edge is defined in 图 7-1. The location of thermal test point TP2 in 图 7-1 is intended to measure the highest window edge temperature. If a particular application causes another point on the window edge to be at a higher temperature, that point should be used.
(9) Temperature delta is the highest difference between the ceramic test point 1 (TP1) and anywhere on the window edge as shown in 图 7-1. The window test point TP2 shown in 图 7-1 is intended to result in the worst case delta. If a particular application causes another point on the window edge to result in a larger delta temperature, that point should be used.

6.2 Storage Conditions

Applicable for the DMD as a component or non-operating in a system.

		MIN	MAX	UNIT
T_{DMD}	DMD storage temperature	–40	85	°C
T_{DP}	Average dew point temperature (non-condensing) [1]		24	°C
T_{DP-ELR}	Elevated dew point temperature range (non-condensing) [2]	28	36	°C
CT_{ELR}	Cumulative time in elevated dew point temperature range		6	months

(1) The average over time (including storage and operating) that the device is not in the elevated dew point temperature range.

Copyright © 2023 Texas Instruments Incorporated

(2) Exposure to dew point temperatures in the elevated range during storage and operation should be limited to less than a total cumulative time of CT_{ELR}.

6.3 ESD Ratings

			VALUE	UNIT
$V_{(ESD)}$	Electrostatic discharge	Human body model (HBM), per ANSI/ESDA/JEDEC JS-001, all pins[1]	±2000	V
		Charged-device model (CDM), per JEDEC specification JESD22-C101, all pins[2]	±500	

(1) JEDEC document JEP155 states that 500-V HBM allows safe manufacturing with a standard ESD control process.
(2) JEDEC document JEP157 states that 250-V CDM allows safe manufacturing with a standard ESD control process.

6.4 Recommended Operating Conditions

Over operating free-air temperature range (unless otherwise noted)[1] [2]

		MIN	NOM	MAX	UNIT
SUPPLY VOLTAGE RANGE[3]					
V_{DD}	Supply voltage for LVCMOS core logic Supply voltage for LPSDR low-speed interface	1.65	1.8	1.95	V
V_{DDI}	Supply voltage for SubLVDS receivers	1.65	1.8	1.95	V
V_{OFFSET}	Supply voltage for HVCMOS and micromirror electrode[4]	9.5	10	10.5	V
V_{BIAS}	Supply voltage for micromirror electrode	17.5	18	18.5	V
V_{RESET}	Supply voltage for micromirror electrode	–14.5	–14	–13.5	V
$\lvert V_{DDI}–V_{DD}\rvert$	Supply voltage delta (absolute value)[5]			0.3	V
$\lvert V_{BIAS}–V_{OFFSET}\rvert$	Supply voltage delta (absolute value)[6]			10.5	V
$\lvert V_{BIAS}–V_{RESET}\rvert$	Supply voltage delta (absolute value)[7]			33	V
CLOCK FREQUENCY					
f_{clock}	Clock frequency for low speed interface LS_CLK[8]	108		120	MHz
f_{clock}	Clock frequency for high speed interface DCLK[9]	300		540	MHz
	Duty cycle distortion DCLK	44%		56%	
SUBLVDS INTERFACE[9]					
$\lvert V_{ID}\rvert$	SubLVDS input differential voltage (absolute value). See 图 6-8, 图 6-9	150	250	350	mV
V_{CM}	Common mode voltage. See 图 6-8, 图 6-9	700	900	1100	mV
$V_{SUBLVDS}$	SubLVDS voltage. See 图 6-8, 图 6-9	575		1225	mV
Z_{LINE}	Line differential impedance (PWB/trace)	90	100	110	Ω
Z_{IN}	Internal differential termination resistance. See 图 6-10	80	100	120	Ω
	100-Ω differential PCB trace	6.35		152.4	mm

6.4 Recommended Operating Conditions (continued)

Over operating free-air temperature range (unless otherwise noted)(1) (2)

		MIN	NOM	MAX	UNIT
ENVIRONMENTAL					
T_{ARRAY}	Array Temperature – long-term operational(10) (11) (12) (13)	0		40 to 70(12)	°C
	Array Temperature – short-term operational, 25 hr max(11) (14)	-20		–10	°C
	Array Temperature – short-term operational, 500 hr max(11) (14)	-10		0	°C
	Array Temperature – short-term operational, 500 hr max(11) (14)	70		75	°C
T_{WINDOW}	Window Temperature – operational(15) (16)			90	°C
$\|T_{DELTA}\|$	Absolute temperature delta between any point on the window edge and the ceramic test point TP1(17)			15	°C
T_{DP-AVG}	Average dew point temperature (non-condensing) (18)			24	°C
T_{DP-ELR}	Elevated dew point temperature range (non-condensing) (19)	28		36	°C
CT_{ELR}	Cumulative time in elevated dew point temperature range			6	months
ILLUMINATION					
ILL_{UV}	Illumination power at wavelengths < 410 nm(10)			10	mW/cm^2
ILL_{VIS}	Illumination power at wavelengths ≥ 410 nm and ≤ 800 nm(20)			26.1	W/cm^2
ILL_{IR}	Illumination power at wavelengths > 800 nm			10	mW/cm^2
ILL_{BLU}	Illumination power at wavelengths ≥ 410 nm and ≤ 475 nm(20)			8.3	W/cm^2
ILL_{BLU1}	Illumination power at wavelengths ≥ 410 nm and ≤ 445 nm(20)			1.5	W/cm^2
ILL_{θ}	Illumination marginal ray angle(15)			55	deg

(1) The functional performance of the device specified in this data sheet is achieved when operating the device within the limits defined by the 节 6.4. No level of performance is implied when operating the device above or below the 节 6.4 limits.
(2) The following power supplies are all required to operate the DMD: V_{DD}, V_{DDI}, V_{OFFSET}, V_{BIAS}, and V_{RESET}. All V_{SS} connections are also required.
(3) All voltage values are with respect to the ground pins (V_{SS}).
(4) V_{OFFSET} supply transients must fall within specified max voltages.
(5) To prevent excess current, the supply voltage delta $|V_{DDI} – V_{DD}|$ must be less than the specified limit.
(6) To prevent excess current, the supply voltage delta $|V_{BIAS} – V_{OFFSET}|$ must be less than the specified limit.
(7) To prevent excess current, the supply voltage delta $|V_{BIAS} – V_{RESET}|$ must be less than the specified limit.
(8) LS_CLK must run as specified to ensure internal DMD timing for reset waveform commands.
(9) Refer to the SubLVDS timing requirements in 节 6.7.
(10) Simultaneous exposure of the DMD to the maximum *Recommended Operating Conditions* for temperature and UV illumination will reduce device lifetime.
(11) The array temperature cannot be measured directly and must be computed analytically from the temperature measured at test point 1 (TP1) shown in 图 7-1 and the package thermal resistance using 节 7.6.
(12) Per 图 6-1, the maximum operational array temperature should be derated based on the micromirror landed duty cycle that the DMD experiences in the end application. Refer to 节 7.8 for a definition of micromirror landed duty cycle.
(13) Long-term is defined as the usable life of the device.
(14) Short-term is the total cumulative time over the useful life of the device.
(15) The maximum marginal ray angle of the incoming illumination light at any point in the micromirror array, including at the pond of micromirrors (POM), should not exceed 55 degrees from the normal to the device array plane. The device window aperture has not necessarily been designed to allow incoming light at higher maximum angles to pass to the micromirrors, and the device performance has not been tested nor qualified at angles exceeding this. Illumination light exceeding this angle outside the micromirror array (including POM) will contribute to thermal limitations described in this document and may negatively affect lifetime.
(16) Window temperature is the highest temperature on the window edge shown in 图 7-1. The location of thermal test point TP2 in 图 7-1 is intended to measure the highest window edge temperature. If a particular application causes another point on the window edge to be at a higher temperature, that point should be used.
(17) Temperature delta is the highest difference between the ceramic test point 1 (TP1) and anywhere on the window edge shown in 图 7-1. The window test point TP2 shown in 图 7-1 is intended to result in the worst-case delta temperature. If a particular application causes another point on the window edge to result in a larger delta temperature, that point should be used.
(18) The average over time (including storage and operating) that the device is not in the 'elevated dew point temperature range'.
(19) Exposure to dew point temperatures in the elevated range during storage and operation should be limited to less than a total cumulative time of CT_{ELR}.
(20) The maximum allowable optical power incident on the DMD is limited by the maximum optical power density for each wavelength range specified and the micromirror array temperature (T_{ARRAY}).

Copyright © 2023 Texas Instruments Incorporated

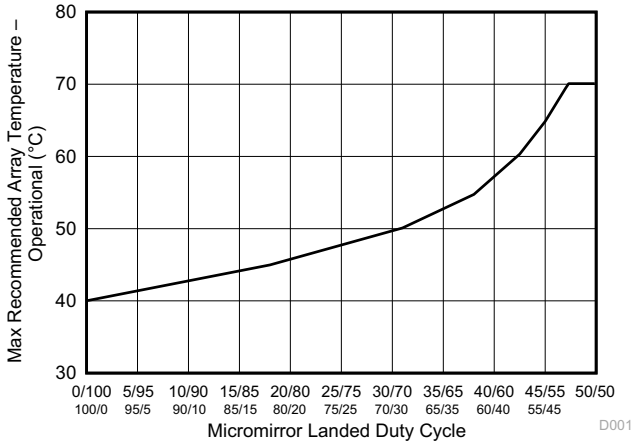

图 6-1. Maximum Recommended Array Temperature – Derating Curve

6.5 Thermal Information

THERMAL METRIC[1]		DLP160AP FQT 35 PINS	UNIT
Thermal resistance	Active area to test point 1 (TP1)[1]	13	°C/W

(1) The DMD is designed to conduct absorbed and dissipated heat to the back of the package. The cooling system must be capable of maintaining the package within the temperature range specified in the 节 6.4. The total heat load on the DMD is largely driven by the incident light absorbed by the active area, although other contributions include light energy absorbed by the window aperture and electrical power dissipated by the array. Optical systems should be designed to minimize the light energy falling outside the window clear aperture since any additional thermal load in this area can significantly degrade the reliability of the device.

6.6 Electrical Characteristics

Over operating free-air temperature range (unless otherwise noted)[1]

PARAMETER		TEST CONDITIONS[2]	MIN	TYP	MAX	UNIT
CURRENT						
I_{DD}	Supply current: V_{DD} [3] [4]	V_{DD} = 1.95 V			50	mA
		V_{DD} = 1.8 V		38		
I_{DDI}	Supply current: V_{DDI} [3] [4]	V_{DDI} = 1.95 V			12	mA
		V_{DDI} = 1.8 V		8		
I_{OFFSET}	Supply current: V_{OFFSET} [5] [6]	V_{OFFSET} = 10.5 V			1	mA
		V_{OFFSET} = 10 V		0.9		
I_{BIAS}	Supply current: V_{BIAS} [5] [6]	V_{BIAS} = 18.5 V			0.2	mA
		V_{BIAS} = 18 V		0.18		
I_{RESET}	Supply current: V_{RESET} [6]	V_{RESET} = –14.5 V			-0.9	mA
		V_{RESET} = –14 V		-0.8		
POWER[7]						
P_{DD}	Supply power dissipation: V_{DD} [3] [4]	V_{DD} = 1.95 V			97.5	mW
		V_{DD} = 1.8 V		68.4		
P_{DDI}	Supply power dissipation: V_{DDI} [3] [4]	V_{DDI} = 1.95 V			23.4	mW
		V_{DD} = 1.8 V		14.4		
P_{OFFSET}	Supply power dissipation: V_{OFFSET} [5] [6]	V_{OFFSET} = 10.5 V			10.5	mW
		V_{OFFSET} = 10 V		9		
P_{BIAS}	Supply power dissipation: V_{BIAS} [5] [6]	V_{BIAS} = 18.5 V			3.7	mW
		V_{BIAS} = 18 V		3.2		
P_{RESET}	Supply power dissipation: V_{RESET} [6]	V_{RESET} = –14.5 V			13.1	mW
		V_{RESET} = –14 V		11.2		
P_{TOTAL}	Supply power dissipation: Total			106	148	mW
LPSDR INPUT[8]						
$V_{IH(DC)}$	DC input high voltage[9]		0.7 × V_{DD}		V_{DD} + 0.3	V
$V_{IL(DC)}$	DC input low voltage[9]		–0.3		0.3 × V_{DD}	V
$V_{IH(AC)}$	AC input high voltage[9]		0.8 × V_{DD}		V_{DD} + 0.3	V
$V_{IL(AC)}$	AC input low voltage[9]		–0.3		0.2 × V_{DD}	V
ΔV_T	Hysteresis ($V_{T+} – V_{T–}$)	图 6-10	0.1 × V_{DD}		0.4 × V_{DD}	V
I_{IL}	Low–level input current	V_{DD} = 1.95 V; V_I = 0 V	–100			nA
I_{IH}	High–level input current	V_{DD} = 1.95 V; V_I = 1.95 V			100	nA
LPSDR OUTPUT[10]						
V_{OH}	DC output high voltage	I_{OH} = –2 mA	0.8 × V_{DD}			V

Copyright © 2023 Texas Instruments Incorporated

6.6 Electrical Characteristics (continued)

Over operating free-air temperature range (unless otherwise noted)[1]

PARAMETER		TEST CONDITIONS[2]	MIN	TYP	MAX	UNIT
V_{OL}	DC output low voltage	I_{OL} = 2 mA			0.2 × V_{DD}	V
CAPACITANCE						
C_{IN}	Input capacitance LPSDR	f = 1 MHz			10	pF
	Input capacitance SubLVDS	f = 1 MHz			10	pF
C_{OUT}	Output capacitance	f = 1 MHz			10	pF
C_{RESET}	Reset group capacitance	f = 1 MHz; (640 ×360 micromirrors)	90		140	pF

(1) Device electrical characteristics are over 节 6.4 unless otherwise noted.
(2) All voltage values are with respect to the ground pins (V_{SS}).
(3) To prevent excess current, the supply voltage delta $|V_{DDI} – V_{DD}|$ must be less than the specified limit.
(4) Supply power dissipation based on non–compressed commands and data.
(5) To prevent excess current, the supply voltage delta $|V_{BIAS} – V_{OFFSET}|$ must be less than the specified limit.
(6) Supply power dissipation based on 3 global resets in 300 µs.
(7) The following power supplies are all required to operate the DMD: V_{DD}, V_{DDI}, V_{OFFSET}, V_{BIAS}, V_{RESET}. All V_{SS} connections are also required.
(8) LPSDR specifications are for pins LS_CLK and LS_WDATA.
(9) Low-speed interface is LPSDR and adheres to the Electrical Characteristics and AC/DC Operating Conditions table in JEDEC Standard No. 209B, *Low-Power Double Data Rate (LPDDR)* JESD209B.
(10) LPSDR specification is for pin LS_RDATA.

6.7 Timing Requirements

Device electrical characteristics are over *Recommended Operating Conditions* unless otherwise noted.

			MIN	NOM	MAX	UNIT
LPSDR						
t_r	Rise slew rate[1]	(30% to 80%) × V_{DD}, 图 6-3	1		3	V/ns
t_f	Fall slew rate[1]	(70% to 20%) × V_{DD}, 图 6-3	1		3	V/ns
t_r	Rise slew rate[2]	(20% to 80%) × V_{DD}, 图 6-3	0.25			V/ns
t_f	Fall slew rate[2]	(80% to 20%) × V_{DD}, 图 6-3	0.25			V/ns
t_c	Cycle time LS_CLK	图 6-2	7.7	8.3		ns
$t_{W(H)}$	Pulse duration LS_CLK high	50% to 50% reference points, 图 6-2	3.1			ns
$t_{W(L)}$	Pulse duration LS_CLK low	50% to 50% reference points, 图 6-2	3.1			ns
t_{su}	Setup time	LS_WDATA valid before LS_CLK ↑, 图 6-2	1.5			ns
t_h	Hold time	LS_WDATA valid after LS_CLK ↑, 图 6-2	1.5			ns
t_{WINDOW}	Window time[1] [3]	Setup time + hold time, 图 6-2	3			ns
$t_{DERATING}$	Window time derating[1] [3]	For each 0.25 V/ns reduction in slew rate below 1 V/ns, 图 6-5		0.35		ns
SubLVDS						
t_r	Rise slew rate	20% to 80% reference points, 图 6-4	0.7	1		V/ns
t_f	Fall slew rate	80% to 20% reference points, 图 6-4	0.7	1		V/ns
t_c	Cycle time DCLK	图 6-6	1.79	1.85		ns
$t_{W(H)}$	Pulse duration DCLK high	50% to 50% reference points, 图 6-6	0.79			ns
$t_{W(L)}$	Pulse duration DCLK low	50% to 50% reference points, 图 6-6	0.79			ns
t_{su}	Setup time	D(0:7) valid before DCLK ↑ or DCLK ↓, 图 6-6	Setup and Hold times are defined by t_{WINDOW}			
t_h	Hold time	D(0:7) valid after DCLK ↑ or DCLK ↓, 图 6-6	Setup and Hold times are defined by t_{WINDOW}			
t_{WINDOW}	Window time	Setup time + hold time, 图 6-6, 图 6-7	0.3			ns

6.7 Timing Requirements (continued)

Device electrical characteristics are over *Recommended Operating Conditions* unless otherwise noted.

			MIN	NOM	MAX	UNIT
$t_{LVDS-ENABLE+REFGEN}$	Power-up receiver(4)				2000	ns

(1) Specification is for LS_CLK and LS_WDATA pins. Refer to LPSDR input rise slew rate and fall slew rate in 图 6-3.
(2) Specification is for DMD_DEN_ARSTZ pin. Refer to LPSDR input rise and fall slew rate in 图 6-3.
(3) Window time derating example: 0.5-V/ns slew rate increases the window time by 0.7 ns, from 3 to 3.7 ns.
(4) Specification is for SubLVDS receiver time only and does not take into account commanding and latency after commanding.

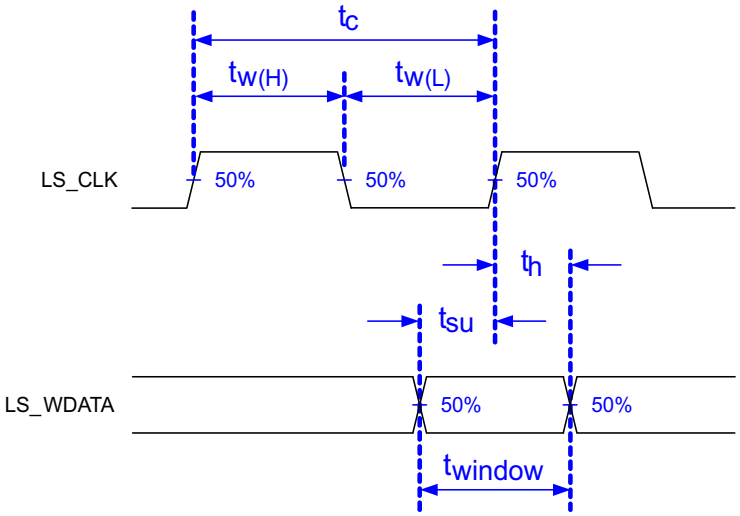

Low-speed interface is LPSDR and adheres to the 节 6.6 and AC/DC Operating Conditions table in JEDEC Standard No. 209B, *Low Power Double Data Rate (LPDDR)* JESD209B.

图 6-2. LPSDR Switching Parameters

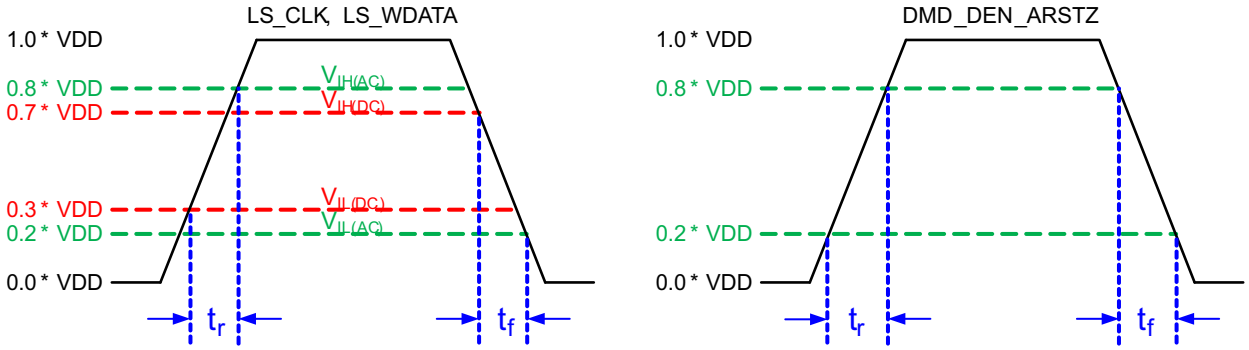

图 6-3. LPSDR Input Rise and Fall Slew Rate

Copyright © 2023 Texas Instruments Incorporated

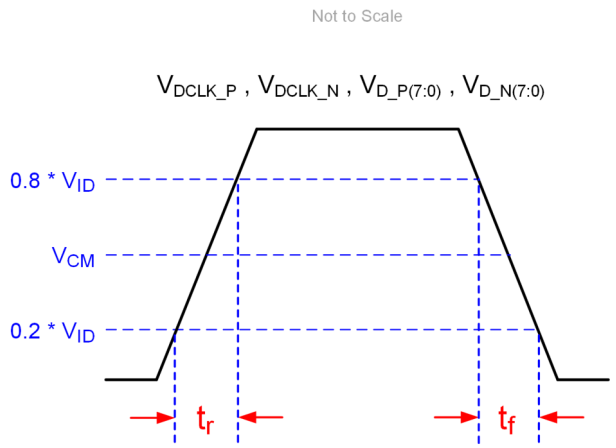

图 6-4. SubLVDS Input Rise and Fall Slew Rate

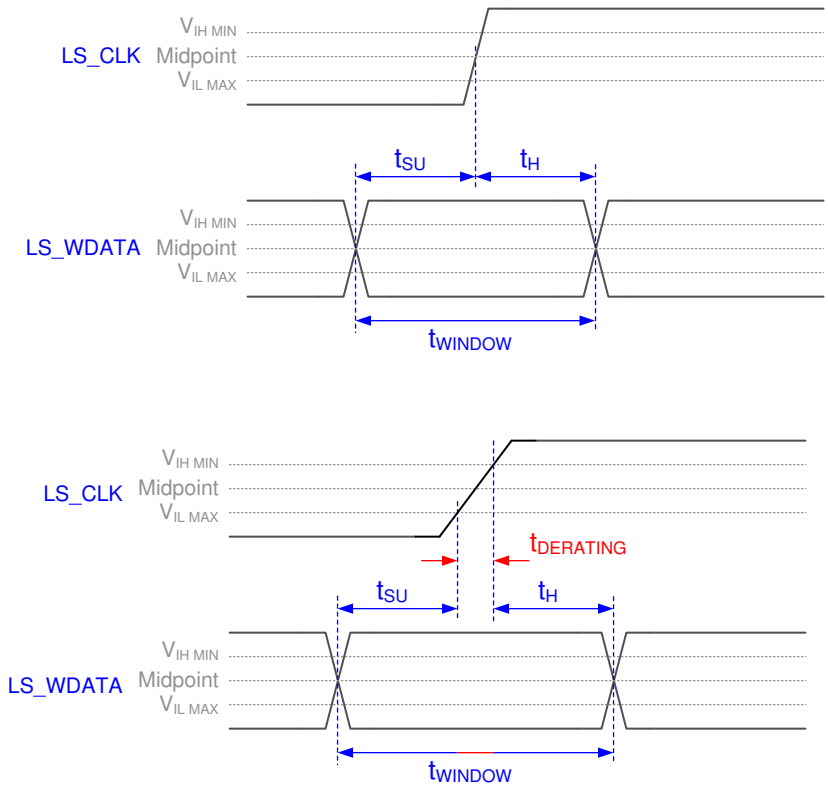

图 6-5. Window Time Derating Concept

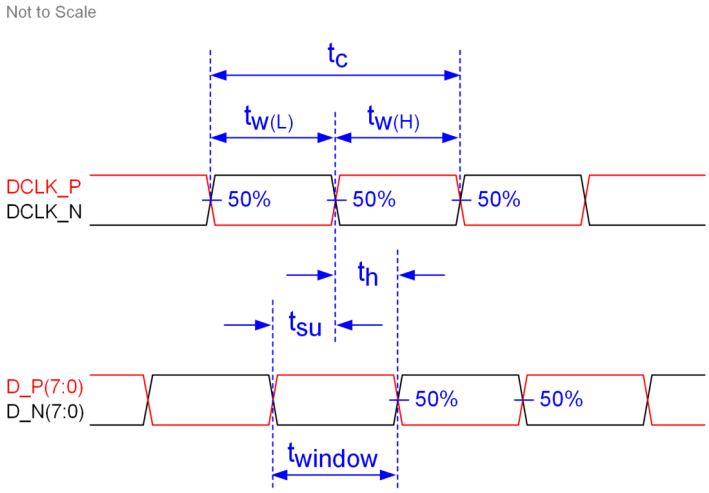

图 6-6. SubLVDS Switching Parameters

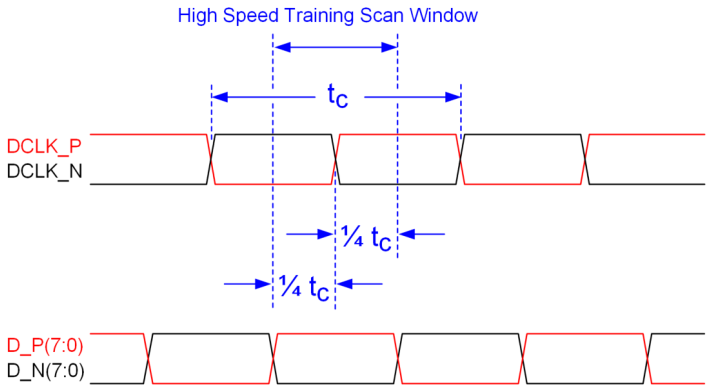

Note: Refer to *#7.3.3* for details.

图 6-7. High-Speed Training Scan Window

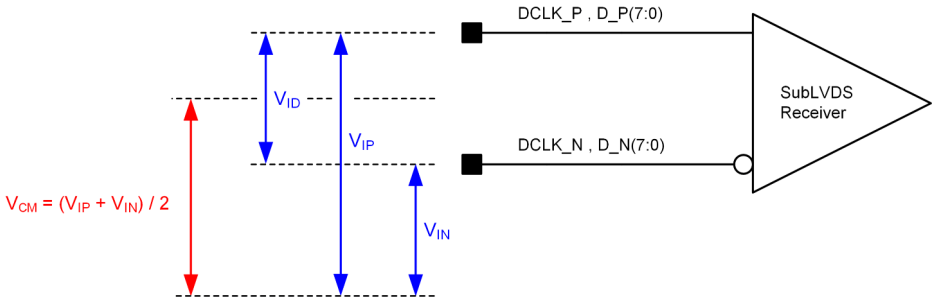

图 6-8. SubLVDS Voltage Parameters

Copyright © 2023 Texas Instruments Incorporated

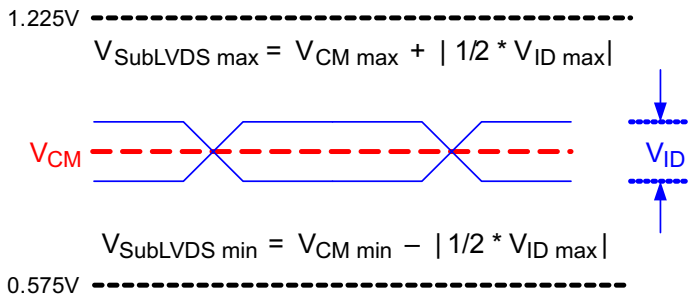

图 6-9. SubLVDS Waveform Parameters

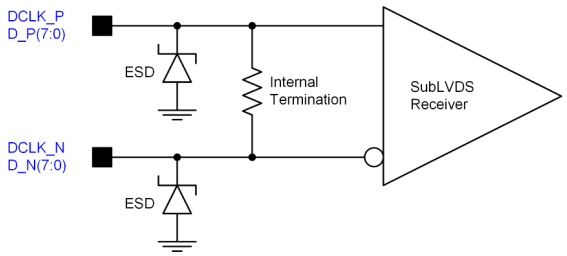

图 6-10. SubLVDS Equivalent Input Circuit

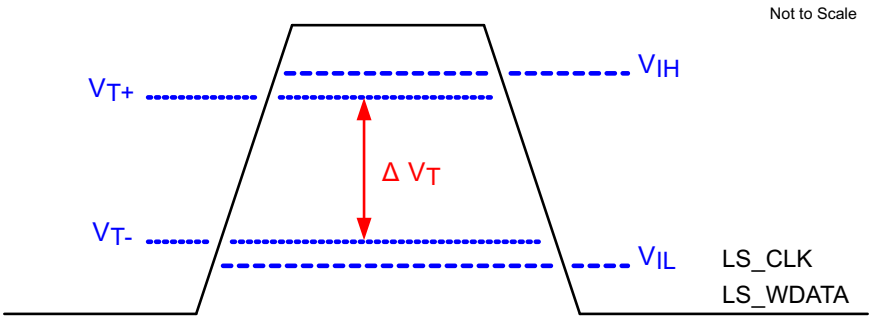

图 6-11. LPSDR Input Hysteresis

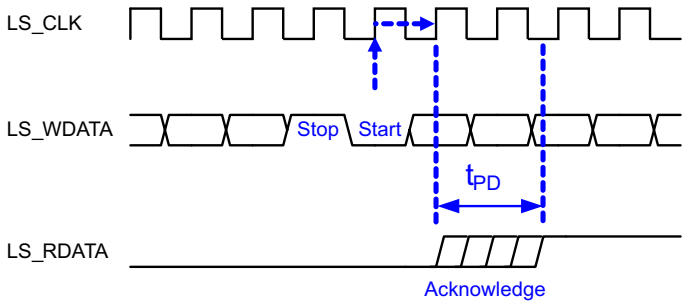

图 6-12. LPSDR Read Out

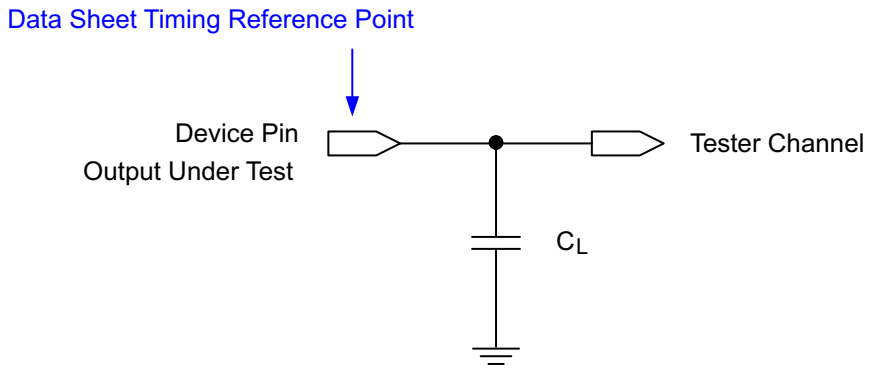

See 节 7.3.4 for more information.

图 6-13. Test Load Circuit for Output Propagation Measurement

6.8 Switching Characteristics

Over operating free-air temperature range (unless otherwise noted). (1)

PARAMETER		TEST CONDITIONS	MIN	TYP	MAX	UNIT
t_{PD}	Output propagation, clock to Q, rising edge of LS_CLK input to LS_RDATA output. See 图 6-12.	C_L = 45 pF			15	ns
	Slew rate, LS_RDATA		0.5			V/ns
	Output duty cycle distortion, LS_RDATA		40%		60%	

(1) Device electrical characteristics are over 节 6.4 unless otherwise noted.

Copyright © 2023 Texas Instruments Incorporated

6.9 System Mounting Interface Loads

PARAMETER	MIN	NOM	MAX	UNIT
Maximum system mounting interface load to be applied to the:				
• Thermal interface area (1)			42	N
• Clamping and electrical interface area (1)			94	N

(1) Uniformly distributed within area shown in 图 6-14.

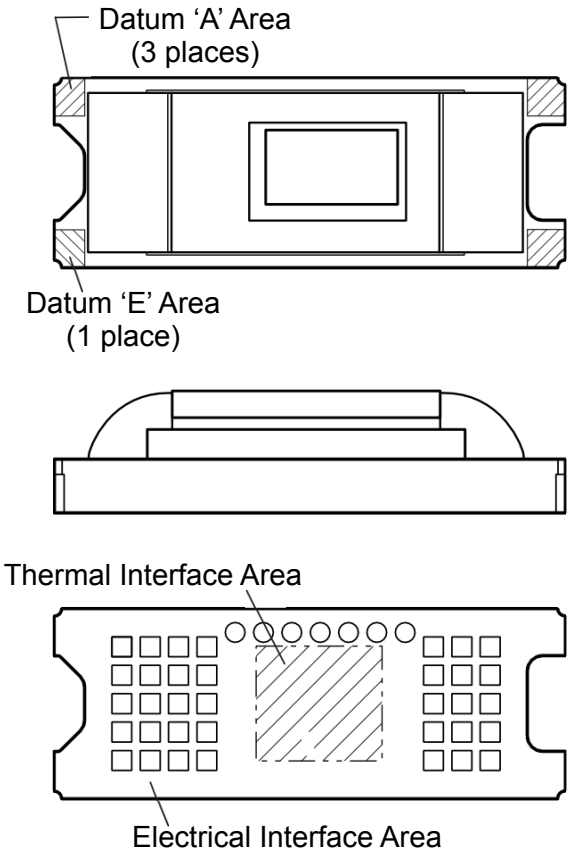

图 6-14. System Interface Loads

6.10 Micromirror Array Physical Characteristics

PARAMETER		VALUE	UNIT
Number of active columns	See 图 6-15	640 (2)	micromirrors
Number of active rows	See 图 6-15	360 (2)	micromirrors
Micromirror (pixel) pitch	See 图 6-16	5.4	µm
Micromirror active array width	Micromirror pitch × number of active columns; see 图 6-15	3.456	mm
Micromirror active array height	Micromirror pitch × number of active rows; see 图 6-15	1.944	mm
Micromirror active border	Pond of micromirror (POM)(1)	20	micromirrors/side

(1) The structure and qualities of the border around the active array include a band of partially functional micromirrors called the POM. These micromirrors are structurally or electrically prevented from tilting toward the bright or ON state, but still require an electrical bias to tilt toward OFF.
(2) The DLP image processing in the DMD combined with limited input resolution for this chipset result in a 320 x 180 image resolution being displayed.

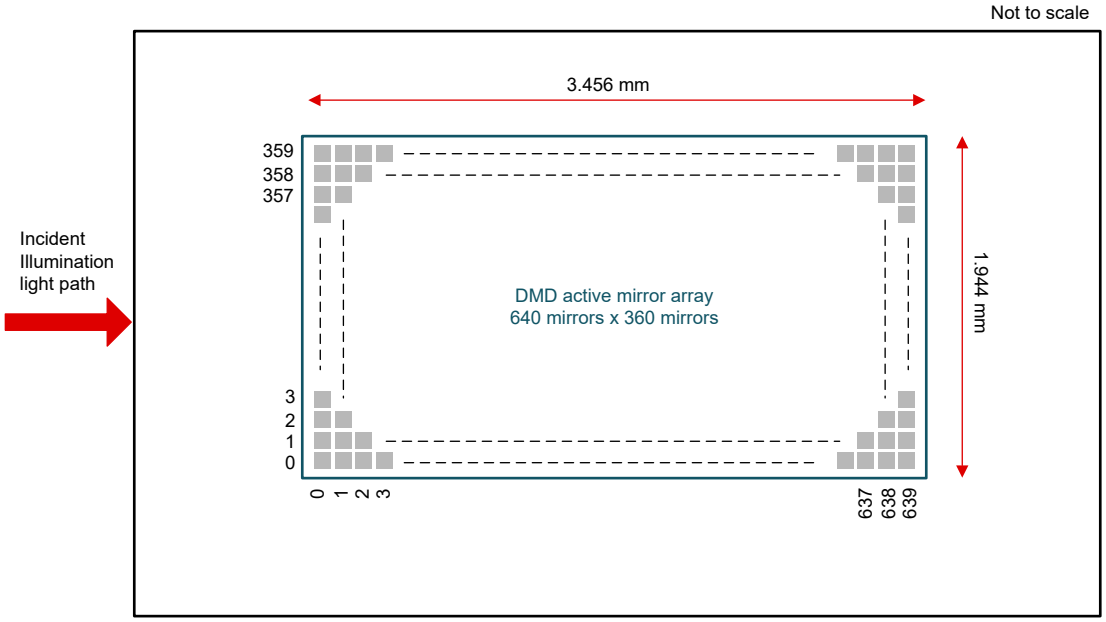

图 6-15. Micromirror Array Physical Characteristics

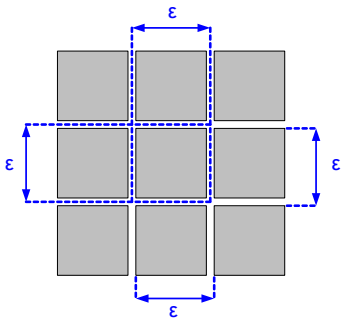

图 6-16. Mirror (Pixel) Pitch

Copyright © 2023 Texas Instruments Incorporated

6.11 Micromirror Array Optical Characteristics

PARAMETER		TEST CONDITIONS	MIN	NOM	MAX	UNIT
Micromirror tilt angle		DMD landed state(1)		17		degree
Micromirror tilt angle tolerance(2) (3) (4) (5)			–1.4		1.4	degree
Micromirror tilt direction (6) (7)		Landed ON state		180		degree
		Landed OFF state		270		
Micromirror crossover time(8)		Typical performance		1	3	µs
Micromirror switching time(9)		Typical performance	10			
Image performance (10)	Bright pixel(s) in active area (11)	Gray 10 Screen (12)			0	micromirrors
	Bright pixel(s) in the POM (13)	Gray 10 Screen (12)			1	
	Dark pixel(s) in the active area (14)	White Screen			4	
	Adjacent pixel(s) (15)	Any Screen			0	
	Unstable pixel(s) in active area (16)	Any Screen			0	

(1) Measured relative to the plane formed by the overall micromirror array.
(2) Additional variation exists between the micromirror array and the package datums.
(3) Represents the landed tilt angle variation relative to the nominal landed tilt angle.
(4) Represents the variation that can occur between any two individual micromirrors, located on the same device or located on different devices.
(5) For some applications, it is critical to account for the micromirror tilt angle variation in the overall system optical design. With some system optical designs, the micromirror tilt angle variation within a device may result in perceivable non-uniformities in the light field reflected from the micromirror array. With some system optical designs, the micromirror tilt angle variation between devices may result in colorimetry variations, system efficiency variations, or system contrast variations.
(6) When the micromirror array is landed (not parked), the tilt direction of each individual micromirror is dictated by the binary contents of the CMOS memory cell associated with each individual micromirror. A binary value of 1 results in a micromirror landing in the ON state direction. A binary value of 0 results in a micromirror landing in the OFF state direction. See 图 6-17.
(7) Micromirror tilt direction is measured as in a typical polar coordinate system: Measuring counter-clockwise from a 0° reference which is aligned with the +X Cartesian axis.
(8) The time required for a micromirror to nominally transition from one landed state to the opposite landed state.
(9) The minimum time between successive transitions of a micromirror.
(10) Conditions of Acceptance: All DMD image quality returns will be evaluated using the following projected image test conditions:
Test set degamma shall be linear
Test set brightness and contrast shall be set to nominal
The diagonal size of the projected image shall be a minimum of 20 inches
The projections screen shall be 1X gain
The projected image shall be inspected from a 38 inch minimum viewing distance
The image shall be in focus during all image quality tests
(11) Bright pixel definition: A single pixel or mirror that is stuck in the ON position and is visibly brighter than the surrounding pixels
(12) Gray 10 screen definition: All areas of the screen are colored with the following settings:
Red = 10/255
Green = 10/255
Blue = 10/255
(13) POM definition: Rectangular border of off-state mirrors surrounding the active area
(14) Dark pixel definition: A single pixel or mirror that is stuck in the OFF position and is visibly darker than the surrounding pixels
(15) Adjacent pixel definition: Two or more stuck pixels sharing a common border or common point, also referred to as a cluster
(16) Unstable pixel definition: A single pixel or mirror that does not operate in sequence with parameters loaded into memory. The unstable pixel appears to be flickering asynchronously with the image

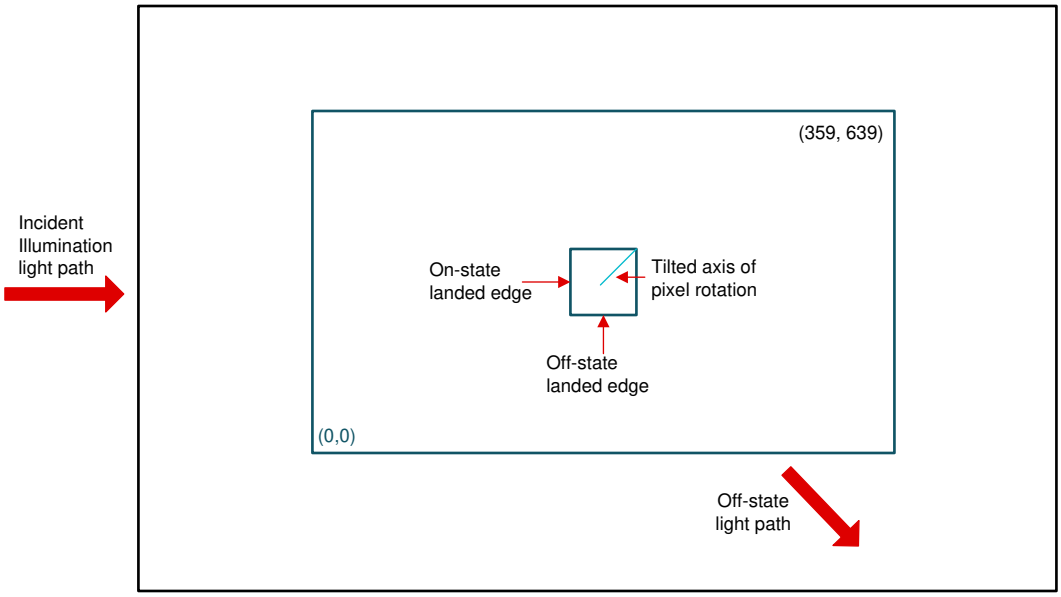

图 6-17. Landed Pixel Orientation and Tilt

Copyright © 2023 Texas Instruments Incorporated

6.12 Window Characteristics

PARAMETER[1]		MIN	NOM	MAX	UNIT
Window material			Corning Eagle XG		
Window refractive index	At wavelength 546.1 nm		1.5119		
Window aperture				See [1]	
Illumination overfill				See [1]	
Window transmittance, single-pass through both surfaces and glass	Minimum within the wavelength range 420 to 680 nm. Applies to all angles 0° to 30° AOI.	97%			
	Average over the wavelength range 420 to 680 nm. Applies to all angles 30° to 45° AOI.	97%			

(1) See # 7.5 for more information.

6.13 Chipset Component Usage Specification

备注

TI assumes no responsibility for image quality artifacts or DMD failures caused by optical system operating conditions exceeding limits described previously.

The DLP160AP is a component of one or more DLP chipsets. Reliable function and operation of the DLP160AP requires that it be used in conjunction with the other components of the applicable DLP chipset, including those components that contain or implement TI DMD control technology. TI DMD control technology consists of the TI technology and devices used for operating or controlling a DLP DMD.

7 Detailed Description

7.1 Overview

The is a 0.16-inch diagonal spatial light modulator of aluminum micromirrors. Pixel array size is 640 columns by 360 rows in a square grid pixel arrangement. The electrical interface is sub low voltage differential signaling (SubLVDS) data.

The is part of the chipset comprised of the DMD, the DLPC3420ZVB display controller, and the DLPA2000/2005 PMIC/LED driver. To ensure reliable operation, the DMD must always be used with the DLPC3420ZVB display controller and the DLPA2000/2005 PMIC/LED drivers.

7.2 Functional Block Diagram

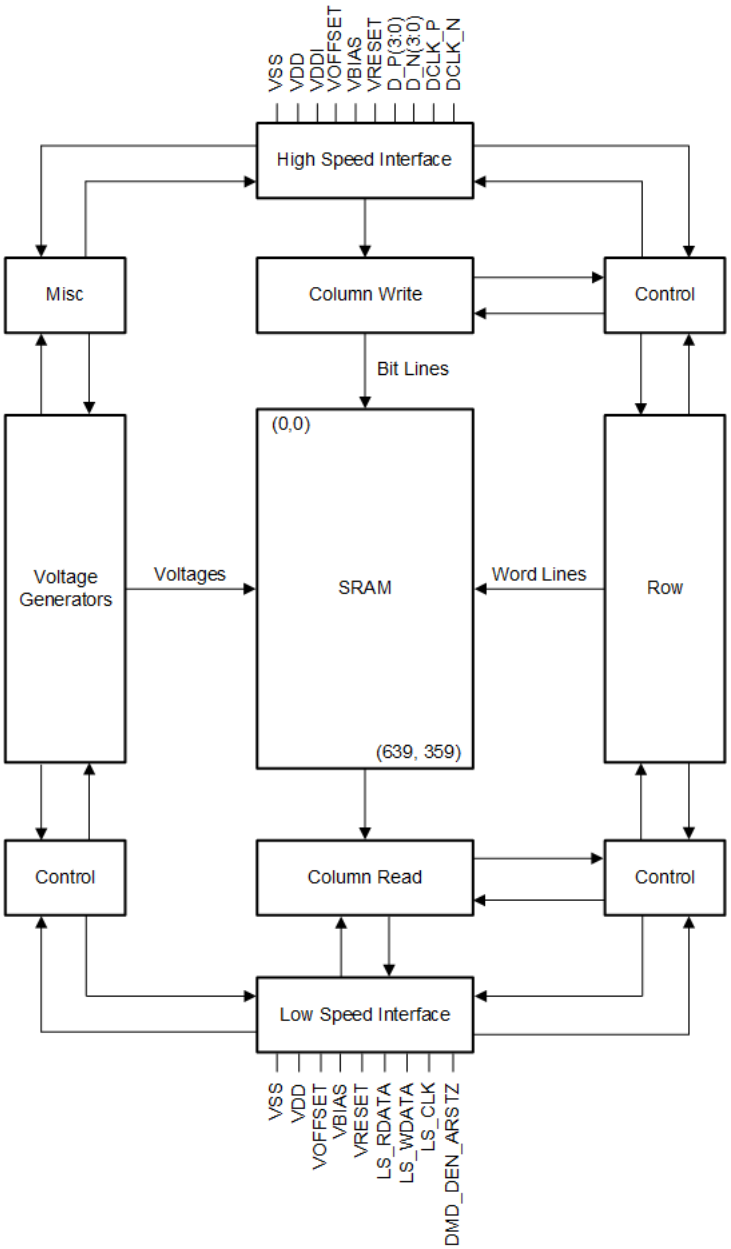

Copyright © 2023 Texas Instruments Incorporated

7.3 Feature Description

7.3.1 Power Interface

The power management IC DLPA2000/2005 contains three regulated DC supplies for the DMD reset circuitry: V_{BIAS}, V_{RESET} and V_{OFFSET}, as well as the two regulated DC supplies for the DLPC3420ZVB controller.

7.3.2 Low-Speed Interface

The low speed interface handles instructions that configure the DMD and control reset operation. LS_CLK is the low–speed clock, and LS_WDATA is the low speed data input.

7.3.3 High-Speed Interface

The purpose of the high-speed interface is to transfer pixel data rapidly and efficiently, making use of high speed DDR transfer and compression techniques to save power and time. The high-speed interface is composed of differential SubLVDS receivers for inputs with a dedicated clock.

7.3.4 Timing

The data sheet provides timing at the device pin. For output timing analysis, the tester pin electronics and its transmission line effects must be taken into account. 图 6-13 shows an equivalent test load circuit for the output under test. Timing reference loads are not intended as a precise representation of any particular system environment or depiction of the actual load presented by a production test. System designers should use IBIS or other simulation tools to correlate the timing reference load to a system environment. The load capacitance value stated is only for characterization and measurement of AC timing signals. This load capacitance value does not indicate the maximum load the device is capable of driving.

7.4 Device Functional Modes

DMD functional modes are controlled by the DLPC3420ZVB controller. See the DLPC3420ZVB controller data sheet or contact a TI applications engineer.

7.5 Optical Interface and System Image Quality Considerations

TI assumes no responsibility for end-equipment optical performance. Achieving the desired end-equipment optical performance involves making trade-offs between numerous component and system design parameters. Optimizing system optical performance and image quality strongly relate to optical system design parameter trades. Although it is not possible to anticipate every conceivable application, projector image quality and optical performance is contingent on compliance to the optical system operating conditions described in the following sections.

7.5.1 Numerical Aperture and Stray Light Control

The angle defined by the numerical aperture of the illumination and projection optics at the DMD optical area should be the same. This angle should not exceed the nominal device mirror tilt angle unless appropriate apertures are added in the illumination and/or projection pupils to block out flat-state and stray light from the projection lens. The mirror tilt angle defines DMD capability to separate the ON optical path from any other light path, including undesirable flat–state specular reflections from the DMD window, DMD border structures, or other system surfaces near the DMD such as prism or lens surfaces. If the numerical aperture exceeds the mirror tilt angle, or if the projection numerical aperture angle is more than two degrees larger than the illumination numerical aperture angle, objectionable artifacts in the display border and/or active area could occur.

7.5.2 Pupil Match

TI's optical and image quality specifications assume that the exit pupil of the illumination optics is nominally centered within 2° of the entrance pupil of the projection optics. Misalignment of pupils can create objectionable artifacts in the display border and/or active area, which may require additional system apertures to control, especially if the numerical aperture of the system exceeds the pixel tilt angle.

7.5.3 Illumination Overfill

The active area of the device is surrounded by an aperture on the inside DMD window surface that masks structures of the DMD chip assembly from normal view and is sized to anticipate several optical operating conditions. Overfill light illuminating the window aperture can create artifacts from the edge of the window aperture opening and other surface anomalies that may be visible on the screen. The illumination optical system should be designed to limit the total light flux incident anywhere on the window aperture from exceeding approximately 10% of the total light flux in the active array. Depending on the particular optical architecture, overfill light may have to be further reduced below the suggested 10% level in order to be acceptable.

7.6 Micromirror Array Temperature Calculation

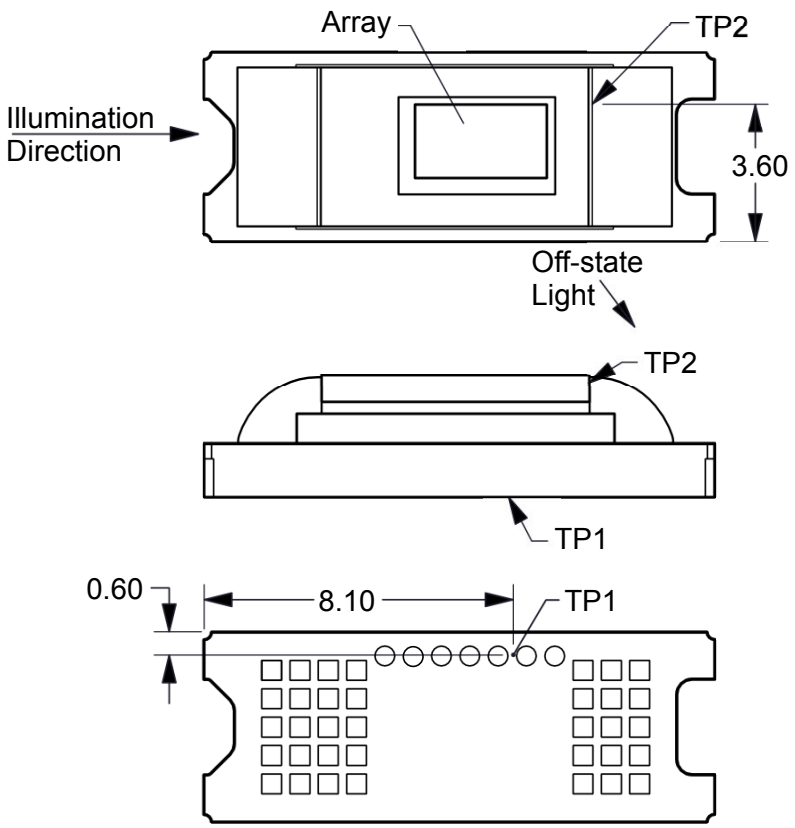

图 7-1. DMD Thermal Test Points

Micromirror array temperature cannot be measured directly, therefore it must be computed analytically from measurement points on the outside of the package, the package thermal resistance, the electrical power, and the illumination heat load. The relationship between array temperature and the reference ceramic temperature (thermal test point TP1 in 图 7-1) is provided by the following equations:

$$T_{ARRAY} = T_{CERAMIC} + (Q_{ARRAY} \times R_{ARRAY\text{-}TO\text{-}CERAMIC})$$

$$Q_{ARRAY} = Q_{ELECTRICAL} + Q_{ILLUMINATION}$$

where

- T_{ARRAY} = Computed array temperature (°C)
- $T_{CERAMIC}$ = Measured ceramic temperature (°C) (TP1 location)

Copyright © 2023 Texas Instruments Incorporated

- $R_{ARRAY\text{-}TO\text{-}CERAMIC}$ = Thermal resistance of package specified in 节 6.5 from array to ceramic TP1 (°C/Watt)
- Q_{ARRAY} = Total DMD power on the array (W) (electrical + absorbed)
- $Q_{ELECTRICAL}$ = Nominal electrical power (W)
- $Q_{INCIDENT}$ = Incident illumination optical power (W)
- $Q_{ILLUMINATION}$ = (DMD average thermal absorptivity × $Q_{INCIDENT}$) (W)
- DMD average thermal absorptivity = 0.4

The electrical power dissipation of the DMD is variable and depends on the voltages, data rates and operating frequencies. A nominal electrical power dissipation to use when calculating array temperature is 0.07 Watts. The absorbed power from the illumination source is variable and depends on the operating state of the micromirrors and the intensity of the light source. The equations shown above are valid for a single chip or multichip DMD system. It assumes an illumination distribution of 83.7% on the active array, and 16.3% on the array border.

The sample calculation for a typical projection application is as follows:

$Q_{INCIDENT}$ = 1.4 W (measured)

$T_{CERAMIC}$ = 55.0°C (measured)

$Q_{ELECTRICAL}$ = 0.07 W

Q_{ARRAY} = 0.07 W + (0.40 × 1.4 W) =0.63 W

T_{ARRAY} = 55.0°C + (0.63 W × 13.0°C/W) = 63.2°C

7.7 Micromirror Power Density Calculation

The calculation of the optical power density of the illumination on the DMD in the different wavelength bands uses the total measured optical power on the DMD, percent illumination overfill, area of the active array, and ratio of the spectrum in the wavelength band of interest to the total spectral optical power.

- $ILL_{UV} = [OP_{UV\text{-}RATIO} \times Q_{INCIDENT}] \times 1000 \div A_{ILL}$ (mW/cm^2)
- $ILL_{VIS} = [OP_{VIS\text{-}RATIO} \times Q_{INCIDENT}] \div A_{ILL}$ (W/cm^2)
- $ILL_{IR} = [OP_{IR\text{-}RATIO} \times Q_{INCIDENT}] \times 1000 \div A_{ILL}$ (mW/cm^2)
- $ILL_{BLU} = [OP_{BLU\text{-}RATIO} \times Q_{INCIDENT}] \div A_{ILL}$ (W/cm^2)
- $ILL_{BLU1} = [OP_{BLU1\text{-}RATIO} \times Q_{INCIDENT}] \div A_{ILL}$ (W/cm^2)
- $A_{ILL} = A_{ARRAY} \div (1 - OV_{ILL})$ (cm^2)

where:

- ILL_{UV} = UV illumination power density on the DMD (mW/cm^2)
- ILL_{VIS} = VIS illumination power density on the DMD (W/cm^2)
- ILL_{IR} = IR illumination power density on the DMD (mW/cm^2)
- ILL_{BLU} = BLU illumination power density on the DMD (W/cm^2)
- ILL_{BLU1} = BLU1 illumination power density on the DMD (W/cm^2)
- A_{ILL} = illumination area on the DMD (cm^2)
- $Q_{INCIDENT}$ = total incident optical power on DMD (W) (measured)

Copyright © 2023 Texas Instruments Incorporated

- A_{ARRAY} = area of the array (cm ^{2}) (data sheet)
- OV_{ILL} = percent of total illumination on the DMD outside the array (%) (optical model)
- $OP_{UV\text{-}RATIO}$ = ratio of the optical power for wavelengths <410 nm to the total optical power in the illumination spectrum (spectral measurement)
- $OP_{VIS\text{-}RATIO}$ = ratio of the optical power for wavelengths ≥410 and ≤800 nm to the total optical power in the illumination spectrum (spectral measurement)
- $OP_{IR\text{-}RATIO}$ = ratio of the optical power for wavelengths >800 nm to the total optical power in the illumination spectrum (spectral measurement)
- $OP_{BLU\text{-}RATIO}$ = ratio of the optical power for wavelengths ≥410 and ≤475 nm to the total optical power in the illumination spectrum (spectral measurement)
- $OP_{BLU1\text{-}RATIO}$ = ratio of the optical power for wavelengths ≥410 and ≤445 nm to the total optical power in the illumination spectrum (spectral measurement)

The illumination area varies and depends on the illumination overfill. The total illumination area on the DMD is the array area and overfill area around the array. The optical model is used to determine the percent of the total illumination on the DMD that is outside the array (OV_{ILL}) and the percent of the total illumination that is on the active array. From these values the illumination area (A_{ILL}) is calculated. The illumination is assumed to be uniform across the entire array.

From the measured illumination spectrum, the ratio of the optical power in the wavelength bands of interest to the total optical power is calculated.

Sample calculation:

$Q_{INCIDENT}$ = 1.40 W (measured)

A_{ARRAY} = (0.3456 × 0.1944) = 0.0672 cm^2 (data sheet)

OV_{ILL} = 16.3% (optical model)

$OP_{UV\text{-}RATIO}$ = 0.00021 (spectral measurement)

$OP_{VIS\text{-}RATIO}$ = 0.99977 (spectral measurement)

$OP_{IR\text{-}RATIO}$ = 0.00002 (spectral measurement)

$OP_{BLU\text{-}RATIO}$ = 0.28100 (spectral measurement)

$OP_{BLU1\text{-}RATIO}$ = 0.03200 (spectral measurement)

A_{ILL} = 0.0672 ÷ (1 - 0.163) = 0.0803 cm^2

ILL_{UV} = [0.00021 × 1.40W] × 1000 ÷ 0.0803 cm^2 = 3.66 mW/cm^2

ILL_{VIS} = [0.99977 × 1.40W] ÷ 0.0803 cm^2 = 17.4 W/cm^2

ILL_{IR} = [0.00002 × 1.40W] × 1000 ÷ 0.0803 cm^2 = 0.349 mW/cm^2

ILL_{BLU} = [0.28100 × 1.40W] ÷ 0.0803 cm^2 = 4.90 W/cm^2

ILL_{BLU1} = [0.03200 × 1.40W] ÷ 0.0803 cm^2 = 0.558 W/cm^2

Copyright © 2023 Texas Instruments Incorporated

7.8 Micromirror Landed-On/Landed-Off Duty Cycle

7.8.1 Definition of Micromirror Landed-On/Landed-Off Duty Cycle

The micromirror landed-on/landed-off duty cycle (landed duty cycle) denotes the amount of time (as a percentage) that an individual micromirror is landed in the ON state versus the amount of time the same micromirror is landed in the OFF state.

As an example, a landed duty cycle of 100/0 indicates that the referenced pixel is in the ON state 100% of the time (and in the OFF state 0% of the time), whereas 0/100 would indicate that the pixel is in the OFF state 100% of the time. Likewise, 50/50 indicates that the pixel is ON 50% of the time and OFF 50% of the time.

Note that when assessing landed duty cycle, the time spent switching from one state (ON or OFF) to the other state (OFF or ON) is considered negligible and is thus ignored.

Since a micromirror can only be landed in one state or the other (ON or OFF), the two numbers (percentages) always add to 100.

7.8.2 Landed Duty Cycle and Useful Life of the DMD

Knowing the long-term average landed duty cycle (of the end product or application) is important because subjecting all (or a portion) of the DMD micromirror array (also called the active array) to an asymmetric landed duty cycle for a prolonged period of time can reduce the usable life of the DMD.

Note that it is the symmetry/asymmetry of the landed duty cycle that is of relevance. The symmetry of the landed duty cycle is determined by how close the two numbers (percentages) are to being equal. For example, a landed duty cycle of 50/50 is perfectly symmetrical whereas a landed duty cycle of 100/0 or 0/100 is perfectly asymmetrical.

Copyright © 2023 Texas Instruments Incorporated

7.8.3 Landed Duty Cycle and Operational DMD Temperature

Operational DMD temperature and landed duty cycle interact to affect the usable life of the DMD, and this interaction can be exploited to reduce the impact that an asymmetrical landed duty cycle has on the usable life of the DMD. The relationship between temperature and landed duty cycle is quantified in the de-rating curve shown in 图 6-1. The importance of this curve is that:

- All points along this curve represent the same usable life.
- All points above this curve represent lower usable life (and the further away from the curve, the lower the usable life).
- All points below this curve represent higher usable life (and the further away from the curve, the higher the usable life).

In practice, this curve specifies the maximum operating DMD temperature that the DMD should be operated at for a given long-term average landed duty cycle.

7.8.4 Estimating the Long-Term Average Landed Duty Cycle of a Product or Application

During a given period of time, the landed duty cycle of a given pixel follows from the image content being displayed by that pixel.

For example, in the simplest case, when displaying pure-white on a given pixel for a given time period, that pixel will experience close to a 100/0 landed duty cycle during that time period. Likewise, when displaying pure-black, the pixel will experience close to a 0/100 landed duty cycle.

Between the two extremes (ignoring for the moment color and any image processing that may be applied to an incoming image), the landed duty cycle tracks one-to-one with the gray scale value, as shown in 表 7-1.

表 7-1. Grayscale Value and Nominal Landed Duty Cycle

Grayscale Value	Landed Duty Cycle
0%	0/100
10%	10/90
20%	20/80
30%	30/70
40%	40/60
50%	50/50
60%	60/40
70%	70/30
80%	80/20
90%	90/10
100%	100/0

Accounting for color rendition (but still ignoring image processing) requires knowing both the color intensity (from 0% to 100%) for each constituent primary color (red, green, and/or blue) for the given pixel as well as the color cycle time for each primary color, where “color cycle time” is the total percentage of the frame time that a given primary must be displayed in order to achieve the desired white point.

During a given period of time, the landed duty cycle of a given pixel can be calculated as follows:

$$\text{Landed Duty Cycle} = (\text{Red_Cycle_\%} \times \text{Red_Scale_Value}) + (\text{Green_Cycle_\%} \times \text{Green_Scale_Value}) + (\text{Blue_Cycle_\%} \times \text{Blue_Scale_Value}) \quad (1)$$

where

Copyright © 2023 Texas Instruments Incorporated

Red_Cycle_%, Green_Cycle_%, and Blue_Cycle_% represent the percentage of the frame time that red, green, and blue are displayed (respectively) to achieve the desired white point.

For example, assuming that the red, green and blue color cycle times are 50%, 20%, and 30% respectively (in order to achieve the desired white point), then the landed duty cycle for various combinations of red, green, blue color intensities would be as shown in 表 7-2.

表 7-2. Example Nominal Landed Duty Cycle for Full-Color Pixels

Red Cycle Percentage	Green Cycle Percentage	Blue Cycle Percentage
50%	20%	30%

Red Scale Value	Green Scale Value	Blue Scale Value	Landed Duty Cycle
0%	0%	0%	0/100
100%	0%	0%	50/50
0%	100%	0%	20/80
0%	0%	100%	30/70
12%	0%	0%	6/94
0%	35%	0%	7/93
0%	0%	60%	18/82
100%	100%	0%	70/30
0%	100%	100%	50/50
100%	0%	100%	80/20
12%	35%	0%	13/87
0%	35%	60%	25/75
12%	0%	60%	24/76
100%	100%	100%	100/0

The last factor to account for in estimating the landed duty cycle is any applied image processing. Within the DLP controller DLPC3420ZVB, the two functions which affect the landed duty cycle are gamma and IntelliBright™.

Gamma is a power function of the form Output_Level = A × Input_Level^{Gamma}, where A is a scaling factor that is typically set to 1.

In the DLPC3420ZVB controller, gamma is applied to the incoming image data on a pixel-by-pixel basis. A typical gamma factor is 2.2, which transforms the incoming data as shown in 图 7-2.

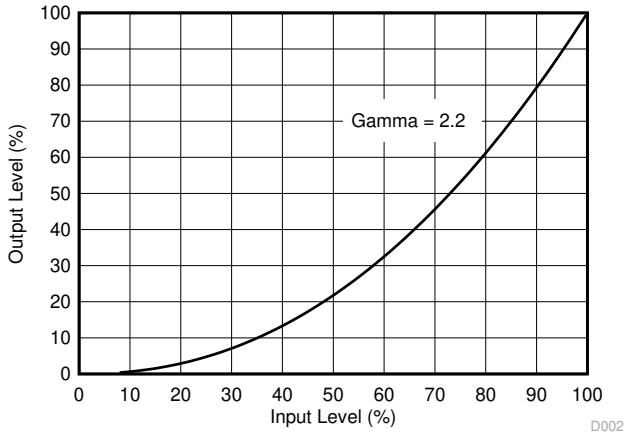

图 7-2. Example of Gamma = 2.2

From 图 7-2, if the gray scale value of a given input pixel is 40% (before gamma is applied), then gray scale value will be 13% after gamma is applied. Therefore, it can be seen that since gamma has a direct impact displayed gray scale level of a pixel, it also has a direct impact on the landed duty cycle of a pixel.

The content adaptive illumination control (CAIC) and local area brightness boost (LABB) of the IntelliBright algorithm also apply transform functions on the gray scale level of each pixel.

But while the amount of gamma applied to every pixel of every frame is constant (the exponent, gamma, is constant), CAIC and LABB are both adaptive functions that can apply different amounts of either boost or compression to every pixel of every frame.

Consideration must also be given to any image processing which occurs before the DLPC3420ZVB controller.

Copyright © 2023 Texas Instruments Incorporated

8 Application and Implementation

备注

以下应用部分中的信息不属于 TI 器件规格的范围，TI 不担保其准确性和完整性。TI 的客 户应负责确定器件是否适用于其应用。客户应验证并测试其设计，以确保系统功能。

8.1 Application Information

The DMDs are spatial light modulators which reflect incoming light from an illumination source to one of two directions, with the primary direction being into a projection or collection optic. Each application is derived primarily from the optical architecture of the system and the format of the data coming into the DLPC3420 controller. The new high tilt pixel in the side-illuminated DMD increases brightness performance and enables a smaller system footprint for thickness-constrained applications. Applications of interest include projection technology embedded in display devices like ultra low-power battery operated mobile accessory projectors, phones, tablets, ultra-mobile low-end Smart TVs, and virtual assistants.

DMD power-up and power-down sequencing is strictly controlled by the DLPA2000/2005. Refer to *节 9* for power-up and power-down specifications. To ensure reliable operation, the DMD must always be used with the DLPC3420 display controller and a DLPA2000/2005 PMIC/LED driver.

8.2 Typical Application

A common application when using a DMD and a DLPC3420 is for creating a pico projector that can be used as an accessory to a smartphone, tablet, or a laptop. The DLPC3420 in the pico projector receives images from a multimedia front end within the product as shown in 图 8-1.

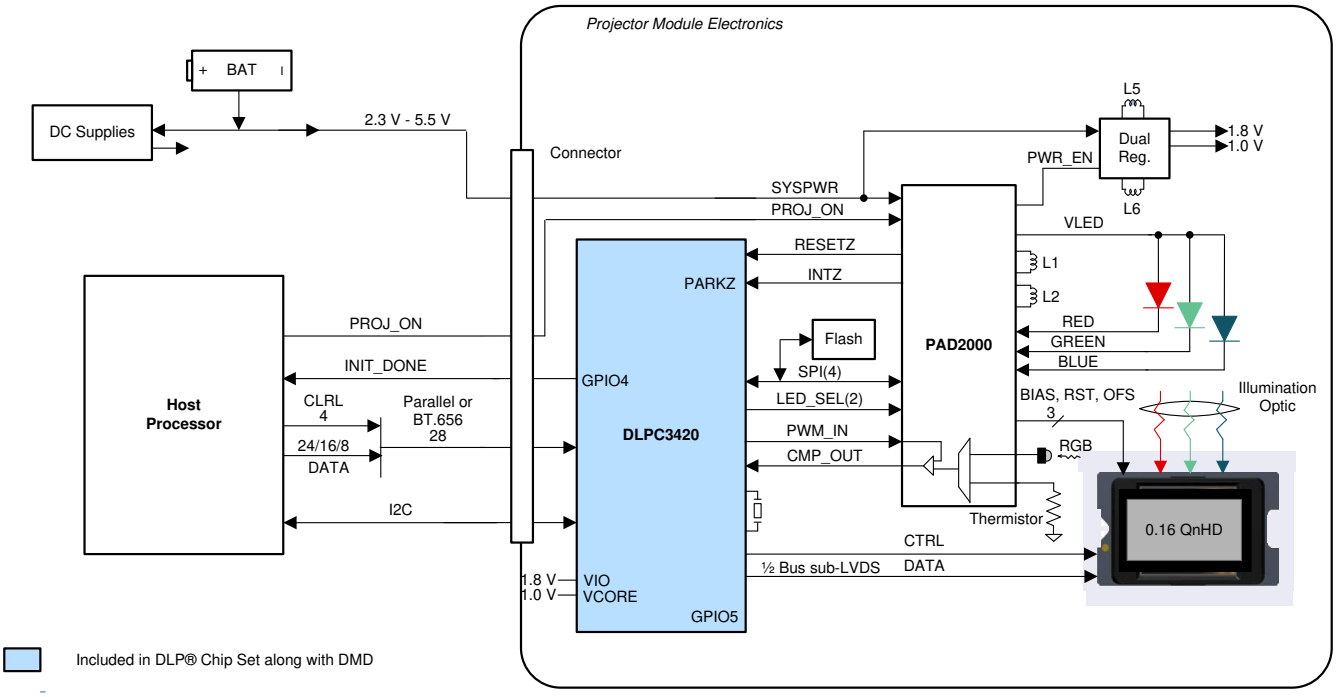

图 8-1. Typical Application Diagram

8.2.1 Design Requirements

A pico projector is created by using a DLP chipset comprised of a DMD, a DLPC3420 controller, and a DLPA2000/2005 PMIC/LED driver. The DLPC3420 controller performs the digital image processing, the DLPA2000/2005 provides the needed analog functions for the projector, and the DMD is the display device for producing the projected image.

In addition to the three DLP chips in the chipset, other chips are needed. At a minimum a flash part is needed to store the DLPC3420 controller software.

The illumination light that is applied to the DMD is typically from red, green, and blue LEDs. These are often contained in three separate packages, but sometimes more than one color of LED die may be in the same package to reduce the overall size of the pico projector.

The DLPC3420 controller receives image data from the multimedia front end over a 24-bit parallel interface. An I^2C interface should be connected from the multimedia front end for sending commands to the DLPC3420 controller for configuring the chipset for different features.

8.2.2 Detailed Design Procedure

For instructions on how to connect the DLPC3420 controller, the DLPA2000/2005, and the DMD together, see the reference design schematic. When a circuit board layout is created from this schematic a very small circuit board is possible. An example small board layout is included in the reference design data base. Layout guidelines should be followed to achieve a reliable projector.

The optical engine that has the LED packages and the DMD mounted to it is typically supplied by an optical OEM who specializes in designing optics for DLP projectors.

Copyright © 2023 Texas Instruments Incorporated

8.2.3 Application Curve

As the LED currents that are driven time-sequentially through the red, green, and blue LEDs are increased, the brightness of the projector increases. This increase is somewhat non-linear, and the curve for typical white screen lumens changes with LED currents is as shown in 图 8-2. For the LED currents shown, it is assumed that the same current amplitude is applied to the red, green, and blue LEDs.

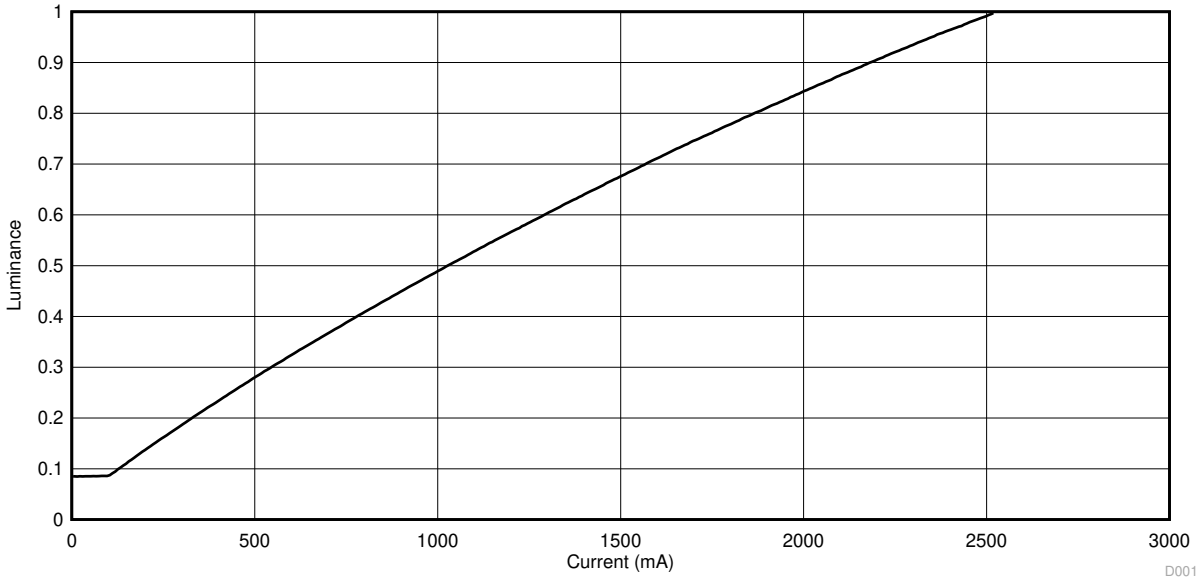

图 8-2. Luminance vs Current

9 Power Supply Recommendations

The following power supplies are all required to operate the DMD: V_{DD}, V_{DDI}, V_{OFFSET}, V_{BIAS}, and V_{RESET}. All V_{SS} connections are also required. DMD power-up and power-down sequencing is strictly controlled by the DLPA2000/2005 devices.

CAUTION

For reliable operation of the DMD, the following power supply sequencing requirements must be followed. Failure to adhere to the prescribed power-up and power-down procedures may affect device reliability.

V_{DD}, V_{DDI}, V_{OFFSET}, V_{BIAS}, and V_{RESET} power supplies have to be coordinated during power-up and power-down operations. Failure to meet any of the below requirements will result in a significant reduction in the reliability and lifetime of the DMD. Refer to 图 9-2. V_{SS} must also be connected.

9.1 Power Supply Power-Up Procedure

- During power-up, V_{DD} and V_{DDI} must always start and settle before V_{OFFSET}, V_{BIAS}, and V_{RESET} voltages are applied to the DMD.
- During power-up, it is a strict requirement that the delta between V_{BIAS} and V_{OFFSET} must be within the specified limit shown in *节 6.4*. Refer to 图 9-2 for power-up delay requirements.
- During power-up, the LPSDR input pins of the DMD shall not be driven high until after V_{DD} and V_{DDI} have settled at operating voltage.
- During power-up, there is no requirement for the relative timing of V_{RESET} with respect to V_{OFFSET} and V_{BIAS}. Power supply slew rates during power-up are flexible, provided that the transient voltage levels follow the requirements listed previously and in 图 9-1.

9.2 Power Supply Power-Down Procedure

- The power-down sequence is the reverse order of the previous power-up sequence. V_{DD} and V_{DDI} must be supplied until after V_{BIAS}, V_{RESET}, and V_{OFFSET} are discharged to within 4 V of ground.
- During power-down, it is not mandatory to stop driving V_{BIAS} prior to V_{OFFSET}, but it is a strict requirement that the delta between V_{BIAS} and V_{OFFSET} must be within the specified limit shown in *节 6.4* (Refer to Note 2 for 图 9-1).
- During power-down, the LPSDR input pins of the DMD must be less than V_{DDI}, the specified limit shown in *节 6.4*.
- During power-down, there is no requirement for the relative timing of V_{RESET} with respect to V_{OFFSET} and V_{BIAS}.
- Power supply slew rates during power-down are flexible, provided that the transient voltage levels follow the requirements listed previously and in 图 9-1.

Copyright © 2023 Texas Instruments Incorporated

9.3 Power Supply Sequencing Requirements

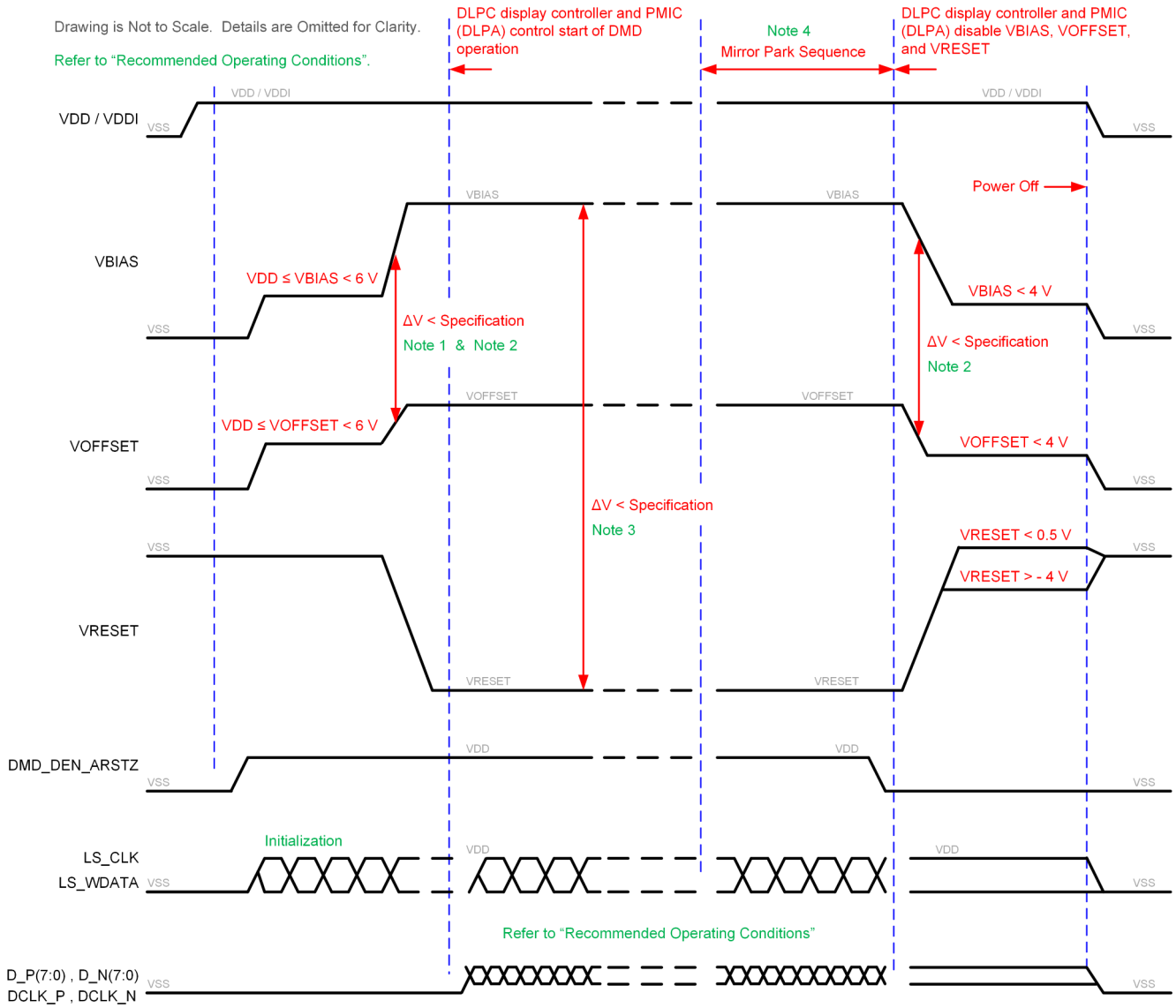

A. Refer to 表 9-1 and 图 9-2 for critical power-up sequence delay requirements.
B. To prevent excess current, the supply voltage delta $|V_{BIAS} – V_{OFFSET}|$ must be less than specified in *节 6.4*. OEMs may find that the most reliable way to ensure this is to power V_{OFFSET} prior to V_{BIAS} during power-up and to remove V_{BIAS} prior to V_{OFFSET} during power-down. Refer to 表 9-1 and 图 9-2 for power-up delay requirements.
C. To prevent excess current, the supply voltage delta $|V_{BIAS} – V_{RESET}|$ must be less than the specified limit shown in *节 6.4*.
D. When system power is interrupted, the DLPA2000/2005 initiates hardware power-down that disables V_{BIAS}, V_{RESET} and V_{OFFSET} after the micromirror park sequence.
E. Drawing is not to scale and details are omitted for clarity.

图 9-1. Power Supply Sequencing Requirements (Power Up and Power Down)

表 9-1. Power-Up Sequence Delay Requirement

PARAMETER		MIN	MAX	UNIT
t_{DELAY}	Delay requirement from V_{OFFSET} power up to V_{BIAS} power up	2		ms
V_{OFFSET}	Supply voltage level at beginning of power–up sequence delay (see 图 9-2)		6	V
V_{BIAS}	Supply voltage level at end of power–up sequence delay (see 图 9-2)		6	V

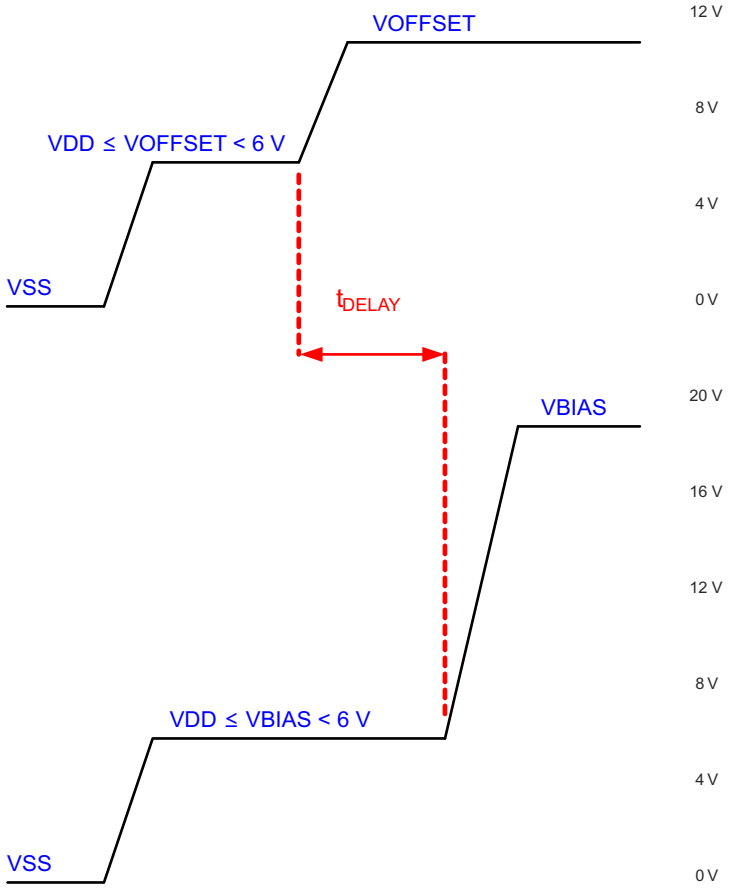

Refer to 表 9-1 for V_{OFFSET} and V_{BIAS} supply voltage levels during power-up sequence delay.

图 9-2. Power-Up Sequence Delay Requirement

Copyright © 2023 Texas Instruments Incorporated

10 Layout

10.1 Layout Guidelines

The DMD is connected to a PCB or a flex circuit using an interposer. For additional layout guidelines regarding length matching, impedance, etc. see the DLPC3420 controller datasheet. For a detailed layout example refer to the layout design files. Some layout guidelines for routing to the DMD are:

- Match lengths for the LS_WDATA and LS_CLK signals.
- Minimize vias, layer changes, and turns for the HS bus signals. Refer to 图 10-1.
- Minimum of two 100-nF (25 V) capacitors - one close to V_{BIAS} pin. Capacitors C4 and C8 in 图 10-1.
- Minimum of two 100-nF (25 V) capacitors - one close to each V_{RST} pin. Capacitors C3 and C7 in 图 10-1.
- Minimum of two 220-nF (25 V) capacitors - one close to each V_{OFS} pin. Capacitors C5 and C6 in 图 10-1.
- Minimum of four 100-nF (6.3 V) capacitors - two close to the VDD/VDDI pins on each side of the DMD. Capacitors C1, C2, C9 and C10 in Figure 10-1.

10.2 Layout Example

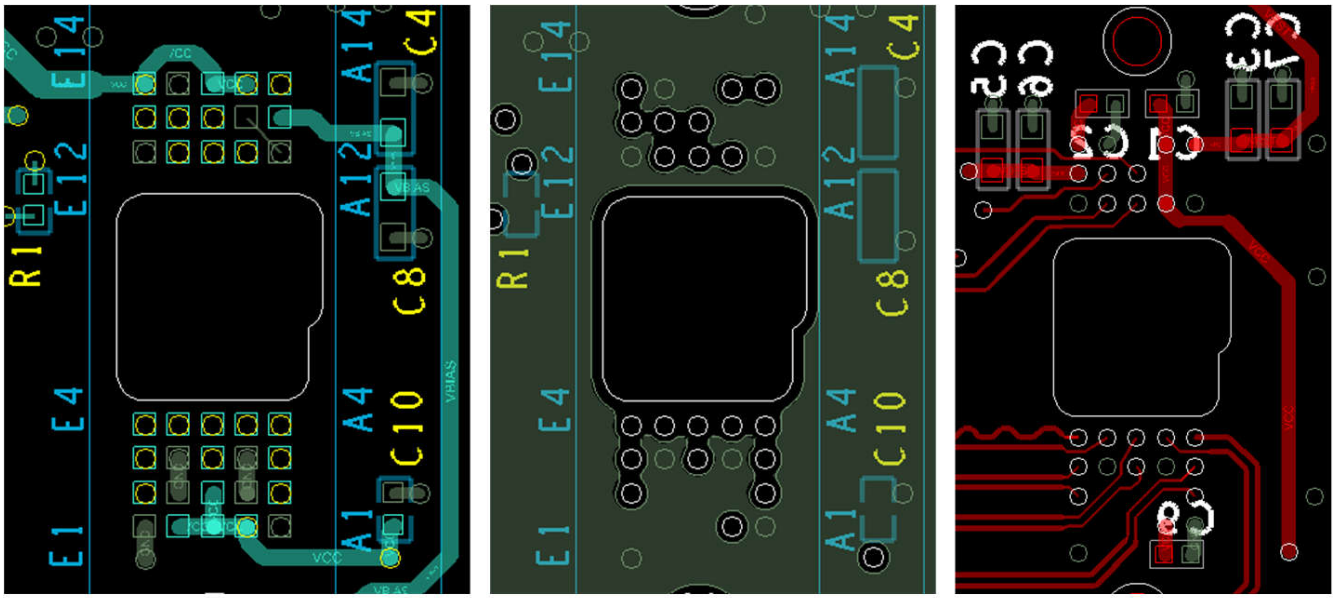

图 10-1. Power Supply Connections

11 Device and Documentation Support

11.1 Device Support

11.1.1 第三方产品免责声明

TI 发布的与第三方产品或服务有关的信息，不能构成与此类产品或服务或保修的适用性有关的认可，不能构成此类产品或服务单独或与任何 TI 产品或服务一起的表示或认可。

11.1.2 Device Nomenclature

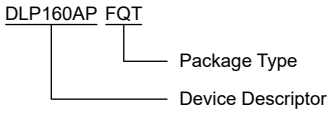

图 11-1. Part Number Description

11.1.3 Device Markings

The device marking includes the legible character string GHJJJJK 160APFQT. GHJJJJK is the lot trace code. 160APFQT is the abbreviated part number.

图 11-2. DMD Marking

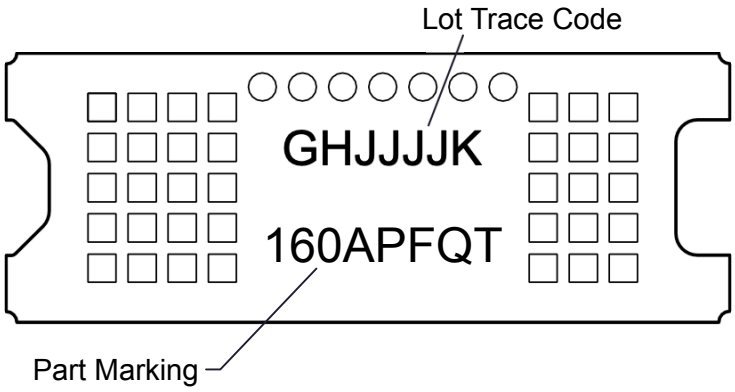

11.2 接收文档更新通知

要接收文档更新通知，请导航至 ti.com 上的器件产品文件夹。点击*订阅更新* 进行注册，即可每周接收产品信息更改摘要。有关更改的详细信息，请查看任何已修订文档中包含的修订历史记录。

11.3 支持资源

TI E2E™ 支持论坛是工程师的重要参考资料，可直接从专家获得快速、经过验证的解答和设计帮助。搜索现有解答或提出自己的问题可获得所需的快速设计帮助。

链接的内容由各个贡献者“按原样”提供。这些内容并不构成 TI 技术规范，并且不一定反映 TI 的观点；请参阅 TI 的《使用条款》。

11.4 Trademarks

IntelliBright™ is a trademark of Texas Instruments.
TI E2E™ is a trademark of Texas Instruments.
所有商标均为其各自所有者的财产。

Copyright © 2023 Texas Instruments Incorporated

11.5 静电放电警告

静电放电 (ESD) 会损坏这个集成电路。德州仪器 (TI) 建议通过适当的预防措施处理所有集成电路。如果不遵守正确的处理和安装程序，可能会损坏集成电路。

ESD 的损坏小至导致微小的性能降级，大至整个器件故障。精密的集成电路可能更容易受到损坏，这是因为非常细微的参数更改都可能会导致器件与其发布的规格不相符。

11.6 术语表

TI 术语表　　本术语表列出并解释了术语、首字母缩略词和定义。

12 Mechanical, Packaging, and Orderable Information

The following pages include mechanical, packaging, and orderable information. This information is the most current data available for the designated devices. This data is subject to change without notice and revision of this document. For browser-based versions of this data sheet, refer to the left-hand navigation.

PACKAGING INFORMATION

Orderable part number	Status (1)	Material type (2)	Package | Pins	Package qty | Carrier	RoHS (3)	Lead finish/ Ball material (4)	MSL rating/ Peak reflow (5)	Op temp (°C)	Part marking (6)
DLP160APFQT	Last Time Buy	Production	null (null) |	180 | JEDEC TRAY (5+1)	Yes	NIAU	N/A for Pkg Type	0 to 70	
DLP160APFQT.B	Last Time Buy	Production	null (null) |	180 | JEDEC TRAY (5+1)	Yes	NIAU	N/A for Pkg Type	0 to 70	

(1) **Status:** For more details on status, see our product life cycle.

(2) **Material type:** When designated, preproduction parts are prototypes/experimental devices, and are not yet approved or released for full production. Testing and final process, including without limitation quality assurance, reliability performance testing, and/or process qualification, may not yet be complete, and this item is subject to further changes or possible discontinuation. If available for ordering, purchases will be subject to an additional waiver at checkout, and are intended for early internal evaluation purposes only. These items are sold without warranties of any kind.

(3) **RoHS values:** Yes, No, RoHS Exempt. See the TI RoHS Statement for additional information and value definition.

(4) **Lead finish/Ball material:** Parts may have multiple material finish options. Finish options are separated by a vertical ruled line. Lead finish/Ball material values may wrap to two lines if the finish value exceeds the maximum column width.

(5) **MSL rating/Peak reflow:** The moisture sensitivity level ratings and peak solder (reflow) temperatures. In the event that a part has multiple moisture sensitivity ratings, only the lowest level per JEDEC standards is shown. Refer to the shipping label for the actual reflow temperature that will be used to mount the part to the printed circuit board.

(6) **Part marking:** There may be an additional marking, which relates to the logo, the lot trace code information, or the environmental category of the part.

Multiple part markings will be inside parentheses. Only one part marking contained in parentheses and separated by a "~" will appear on a part. If a line is indented then it is a continuation of the previous line and the two combined represent the entire part marking for that device.

Important Information and Disclaimer: The information provided on this page represents TI's knowledge and belief as of the date that it is provided. TI bases its knowledge and belief on information provided by third parties, and makes no representation or warranty as to the accuracy of such information. Efforts are underway to better integrate information from third parties. TI has taken and continues to take reasonable steps to provide representative and accurate information but may not have conducted destructive testing or chemical analysis on incoming materials and chemicals. TI and TI suppliers consider certain information to be proprietary, and thus CAS numbers and other limited information may not be available for release.

In no event shall TI's liability arising out of such information exceed the total purchase price of the TI part(s) at issue in this document sold by TI to Customer on an annual basis.

重要通知和免责声明

TI“按原样”提供技术和可靠性数据（包括数据表）、设计资源（包括参考设计）、应用或其他设计建议、网络工具、安全信息和其他资源，不保证没有瑕疵且不做出任何明示或暗示的担保，包括但不限于对适销性、与某特定用途的适用性或不侵犯任何第三方知识产权的暗示担保。

这些资源可供使用 TI 产品进行设计的熟练开发人员使用。您将自行承担以下全部责任：(1) 针对您的应用选择合适的 TI 产品，(2) 设计、验证并测试您的应用，(3) 确保您的应用满足相应标准以及任何其他安全、安保法规或其他要求。

这些资源如有变更，恕不另行通知。TI 授权您仅可将这些资源用于研发本资源所述的 TI 产品的相关应用。严禁以其他方式对这些资源进行复制或展示。您无权使用任何其他 TI 知识产权或任何第三方知识产权。对于因您对这些资源的使用而对 TI 及其代表造成的任何索赔、损害、成本、损失和债务，您将全额赔偿，TI 对此概不负责。

TI 提供的产品受 TI 销售条款)、TI 通用质量指南 或 ti.com 上其他适用条款或 TI 产品随附的其他适用条款的约束。TI 提供这些资源并不会扩展或以其他方式更改 TI 针对 TI 产品发布的适用的担保或担保免责声明。 除非德州仪器 (TI) 明确将某产品指定为定制产品或客户特定产品，否则其产品均为按确定价格收入目录的标准通用器件。

TI 反对并拒绝您可能提出的任何其他或不同的条款。

版权所有 © 2026，德州仪器 (TI) 公司

最后更新日期：2025 年 10 月