CDx4HC367、CDx4HC368、CDx4HCT367、CD74HCT368 高速 CMOS 逻辑六路缓冲器/线路驱动器，三态同向和反向

1 特性

- 缓冲输入
- 高电流总线驱动器输出
- 两个独立三态使能控制
- 传播延迟典型值 t_{PLH}、t_{PHL} = 8ns，V_{CC} = 5V、C_L =15pF 且 T_A = 25℃ 时
- 扇出（在温度范围内）
  - 标准输出：10 个 LSTTL 负载
  - 总线驱动器输出：15 个 LSTTL 负载
- 宽工作温度范围：-55℃ 至 125℃
- 平衡的传播延迟及转换时间
- 与 LSTTL 逻辑 IC 相比，可显著降低功耗
- HC 类型
  - 工作电压为 2 V 至 6 V
  - 高抗噪性：当 V_{CC} = 5V 时，N_{IL} = 30%，N_{IH} = V_{CC} 的 30%
- HCT 类型
  - 工作电压为 4.5V 至 5.5V
  - 直接 LSTTL 输入逻辑兼容性，V_{IL} = 0.8V（最大值），V_{IH} = 2V（最小值）
  - CMOS 输入兼容性，当电压为 V_{OL}、V_{OH} 时，I_I ≤ 1μA

2 说明

HC367、HCT367、HC368 和 CD74HCT368 硅栅 CMOS 三态缓冲器是通用型高速同相和反相缓冲器。HC367 和 HCT367 是同相缓冲器，而 HC368 和 CD74HCT368 是反相缓冲器。它们具有大驱动电流输出，因而即使在驱动大的总线电容时仍能实现高速运作。这些电路具有很低的 CMOS 电路功耗，然而速度却与低功耗肖特基 TTL 电路不相上下。这两种电路均能够驱动多达 15 个低功耗肖特基输入。

器件信息

器件型号	封装[(1)]	封装尺寸（标称值）
CD74HC367M	SOIC (16)	9.90mm × 3.90mm
CD74HC368M	SOIC (16)	9.90mm × 3.90mm
CD74HCT367M	SOIC (16)	9.90mm × 3.90mm
CD74HCT368M	SOIC (16)	9.90mm × 3.90mm
CD74HC367E	PDIP (16)	19.31mm × 6.35mm
CD74HC368E	PDIP (16)	19.31mm × 6.35mm
CD74HCT367E	PDIP (16)	19.31mm × 6.35mm
CD74HCT368E	PDIP (16)	19.31mm × 6.35mm
CD54HC367F3A	CDIP (16)	24.38mm × 6.92mm
CD54HC368F3A	CDIP (16)	24.38mm × 6.92mm
CD54HCT367F3A	CDIP (16)	24.38mm × 6.92mm

(1) 如需了解所有可用封装，请参阅数据表末尾的可订购产品附录。

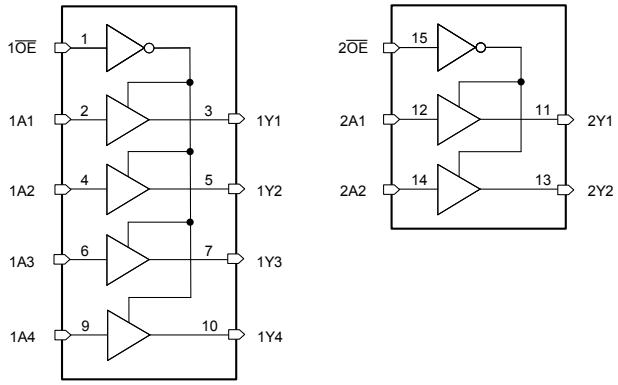

功能方框图

本文档旨在为方便起见，提供有关 TI 产品中文版本的信息，以确认产品的概要。有关适用的官方英文版本的最新信息，请访问 www.ti.com，其内容始终优先。TI 不保证翻译的准确性和有效性。在实际设计之前，请务必参考最新版本的英文版本。
English Data Sheet: SCHS181

Table of Contents

1 特性 1
2 说明 1
3 Revision History 2
4 Pin Configuration and Functions 3
5 Specifications 4
5.1 Absolute Maximum Ratings 4
5.2 Recommended Operating Conditions 4
5.3 Thermal Information 4
5.4 Electrical Characteristics 5
5.5 Switching Characteristics 6
6 Parameter Measurement Information 7
7 Detailed Description 8
7.1 Overview 8
7.2 Functional Block Diagram 8
7.3 Device Functional Modes 8
8 Power Supply Recommendations 9
9 Layout 9
9.1 Layout Guidelines 9
10 Device and Documentation Support 10
10.1 接收文档更新通知 10
10.2 支持资源 10
10.3 Trademarks 10
10.4 Electrostatic Discharge Caution 10
10.5 术语表 10
11 Mechanical, Packaging, and Orderable Information 10

3 Revision History

注：以前版本的页码可能与当前版本的页码不同

Changes from Revision D (October 2003) to Revision E (February 2022)	Page
• 更新了整个文档中的编号、格式、表格、图和交叉参考，以反映现代数据表标准	1

Copyright © 2022 Texas Instruments Incorporated

4 Pin Configuration and Functions

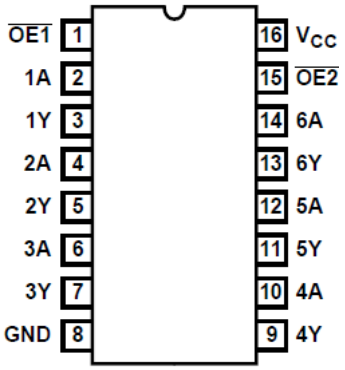

'HC367, 'HCT367
J, D, or N package
16-Pin CDIP, SOIC, PDIP
Top View

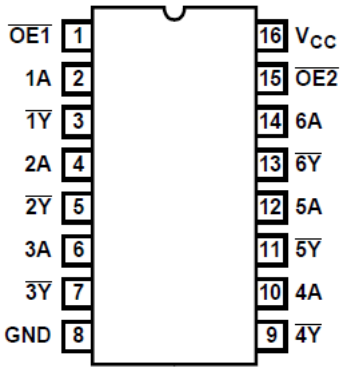

'HC368, CD74HCT368
J, D, or N package
16-Pin CDIP, SOIC, PDIP
Top View

5 Specifications

5.1 Absolute Maximum Ratings

over operating free-air temperature range (unless otherwise noted)[1]

			MIN	MAX	UNIT
V_{CC}	Supply voltage range		-0.5	7	V
I_{IK}	Input clamp current	(V_I < -0.5 V or V_I > V_{CC} + 0.5 V)		±20	mA
I_{OK}	Output clamp current	(V_O < -0.5 V or V_O > V_{CC} + 0.5 V)		±20	mA
I_O	Continuous output current	(-0.5 V < V_O < V_{CC} + 0.5 V)		±35	mA
	Continuous current through V_{CC} or GND			±50	mA
T_J	Junction temperature			150	°C
T_{stg}	Storage temperature		-65	150	°C
	Lead Temperature (Soldering 10s)			300	°C

(1) Stresses beyond those listed under *absolute maximum ratings* may cause permanent damage to the device. These are stress ratings only and functional operation of the device at these or any other conditions beyond those indicated under *recommended operating conditions* is not implied. Exposure to absolute-maximum-rated conditions for extended periods may affect device reliability.

5.2 Recommended Operating Conditions

			MIN	MAX	UNIT
T_A	Temperature range		– 55	125	℃
V_{CC}	Supply voltage range	HC Types	2	6	V
		HCT Types	4.5	5.5	V
V_I,V_O	Input or output voltage		0	V_{CC}	V
t_t	Input rise and fall time	2 V		1000	ns
		4.5 V		500	ns
		6 V		400	ns

5.3 Thermal Information

THERMAL METRIC		D (SOIC) 16 PINS	N (PDIP) 16 PINS	UNIT
$R_{\theta JA}$	Junction-to-ambient thermal resistance[1]	73	67	°C/W

(1) For more information about traditional and new thermal metrics, see the *Semiconductor and IC package thermal metrics* application report.

Copyright © 2022 Texas Instruments Incorporated

5.4 Electrical Characteristics

PARAMETER		TEST CONDITIONS (2)	V_{CC} (V)	25℃			-40℃ to 85℃		-55℃ to 125℃		UNIT
				MIN	TYP	MAX	MIN	MAX	MIN	MAX	
HC TYPES											
V_{IH}	High level input voltage		2	1.5			1.5		1.5		V
			4.5	3.15			3.15		3.15		V
			6	4.2			4.2		4.2		V
V_{IL}	Low level input voltage		2			0.5		0.5		0.5	V
			4.5			1.35		1.35		1.35	V
			6			1.8		1.8		1.8	V
V_{OH}	High level output voltage	I_{OH} = – 20 μA	2	1.9			1.9		1.9		V
		I_{OH} = – 20 μA	4.5	4.4			4.4		4.4		V
		I_{OH} = – 20 μA	6	5.9			5.9		5.9		V
	High level output voltage	I_{OH} = – 6 mA	4.5	3.98			3.84		3.7		V
		I_{OH} = – 7.8 mA	6	5.48			5.34		5.2		V
V_{OL}	Low level output voltage	I_{OL} = 20 μA	2			0.1		0.1		0.1	V
		I_{OL} = 20 μA	4.5			0.1		0.1		0.1	V
		I_{OL} = 20 μA	6			0.1		0.1		0.1	V
	Low level output voltage	I_{OL} = 6 mA	4.5			0.26		0.33		0.4	V
		I_{OL} = 7.8 mA	6			0.26		0.33		0.4	V
I_I	Input leakage current		6			±0.1		±1		±1	μA
I_{CC}	Supply current	0	6			8		80		160	μA
I_{OZ}	Three-state leakage current	V_O = V_{CC} or GND	6			±0.5		±5.0		±10	μA
HCT TYPES											
V_{IH}	High level input voltage		4.5 to 5.5	2			2		2		V
V_{IL}	Low level input voltage		4.5 to 5.5			0.8		0.8		0.8	V
V_{OH}	High level output voltage	I_{OH} = – 20 μA	4.5	4.4			4.4		4.4		V
	High level output voltage	I_{OH} = – 4 mA	4.5	3.98			3.84		3.7		V
V_{OL}	Low level output voltage	I_{OL} = 20 μA	4.5			0.1		0.1		0.1	V
	Low level output voltage	I_{OL} = 4 mA	4.5			0.26		0.33		0.4	V
I_I	Input leakage current	V_I = V_{CC} to GND	5.5			±0.1		±1		±1	μA
I_{CC}	Supply current	V_I = V_{CC} to GND	5.5			8		80		160	μA
ΔI_{CC} (1)	Additional supply current per input pin	$\overline{OE1}$ input held at V_{CC} – 2.1	4.5 to 5.5		100	216		270		294	μA
		All other inputs held at V_{CC} – 2.1	4.5 to 5.5		100	198		247.5		269.5	
I_{OZ}	Three-state leakage current	V_O = V_{CC} or GND	5.5			±0.5		±5.0		±10	μA

(1) For dual-supply systems theoretical worst case (V_I = 2.4 V, V_{CC} = 5.5 V) specification is 1.8 mA.

Copyright © 2022 Texas Instruments Incorporated

(2) $V_I = V_{IH}$ or V_{IL}, unless otherwise noted.

5.5 Switching Characteristics

Input t_r, t_f = 6 ns. Unless otherwise specified, C_L = 50pF

PARAMETER		V_{CC} (V)	25℃		-40℃ to 85℃	-55℃ to 125℃	UNIT
			TYP	MAX	MAX	MAX	
HC TYPES							
t_{pd}	Data to outputs HC/HCT367	2		105	130	160	ns
		4.5		21	26	32	ns
		6	8[3]	18	24	27	ns
	Data to outputs HC/HCT368	2		105	130	160	ns
		4.5		21	26	32	ns
		6	9[3]	18	24	27	ns
	Output enable and disable to outputs	2		150	190	225	ns
		4.5		30	38	45	ns
		6	12[3]	26	33	38	ns
t_t	Output transition time	2		60	75	90	ns
		4.5		12	15	18	ns
		6		10	13	15	ns
C_I	Input capacitance			10	10	10	pF
C_O	Three-state output capacitance			20	20	20	pF
C_{PD}	Power dissipation capacitance[1][2]	5	40				pF
HCT TYPES							
t_{pd}	Data to outputs HC/HCT367	4.5	9[3]	25	31	38	ns
	Data to outputs HC/HCT368	4.5	11[3]	30	38	45	ns
	Output enable and disable to outputs	4.5	14[3]	35	44	53	ns
t_t	Output transition time	4.5		12	15	18	ns
C_{IN}	Input capacitance			10	10	10	pF
C_O	Three-state capacitance			20	20	20	pF
C_{PD}	Power dissipation capacitance[1][2]	5	42				pF

(1) C_{PD} is used to determine the dynamic power consumption, per buffer.
(2) $P_D = V_{CC}{}^2 f_i (C_{PD} + C_L)$ where f_i = input frequency, C_L = output load capacitance, V_{CC} = supply voltage.
(3) C_L = 15 pF and V_{CC} = 5 V.

Copyright © 2022 Texas Instruments Incorporated

6 Parameter Measurement Information

t_{pd} is the maximum between t_{PLH} and t_{PHL}

t_t is the maximum between t_{TLH} and t_{THL}

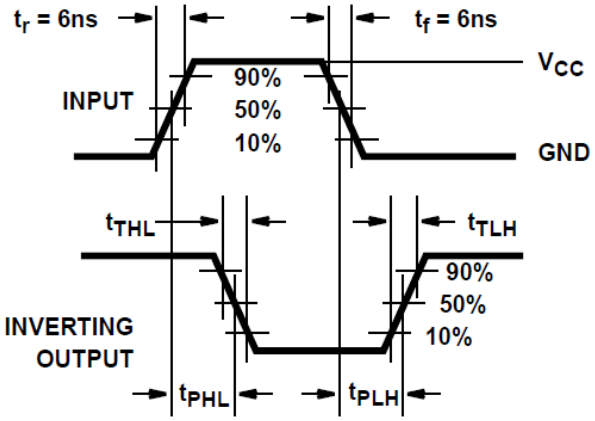

图 6-1. HC Transition Times and Propagation Delay Times, Combination Logic

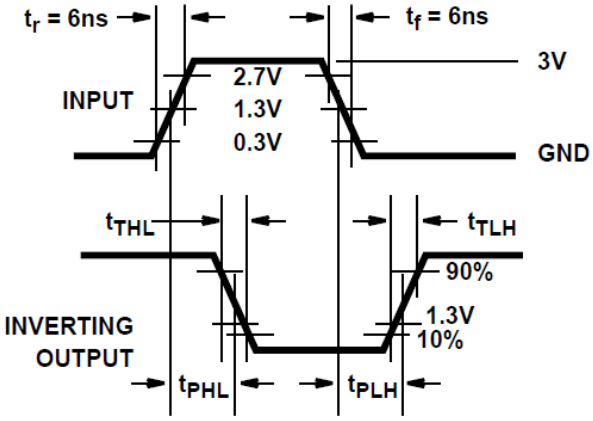

图 6-2. HCT Transition Times and Propagation Delay Times, Combination Logic

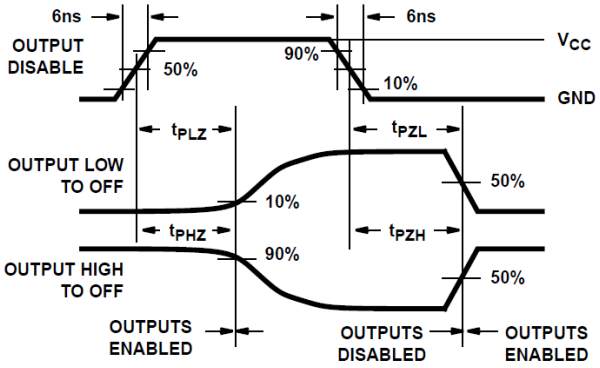

图 6-3. HC Three-State Propagation Delay Waveform

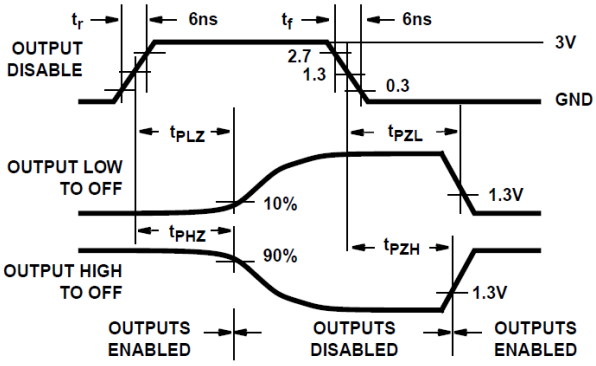

图 6-4. HCT Three-State Propagation Delay Waveform

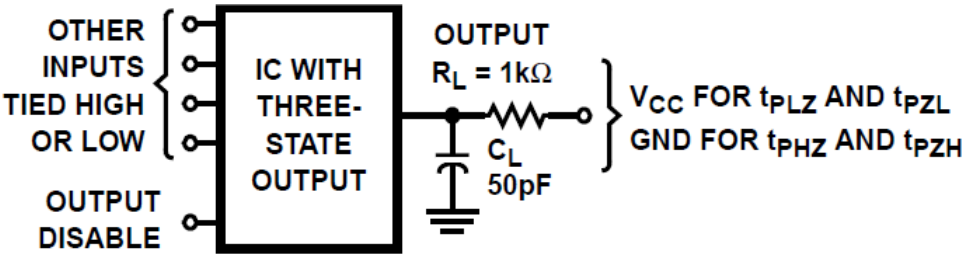

备注

Open drain waveforms t_{PLZ} and t_{PZL} are the same as those for three-state shown on the left. The test circuit is Output R_L = 1 kΩ to V_{CC}, C_L = 50 pF.

图 6-5. HC and HCT Three-State Propagation Delay Test Circuit

7 Detailed Description

7.1 Overview

The ’HC367, ’HCT367, ’HC368, and CD74HCT368 silicon gate CMOS three-state buffers are general purpose high-speed non-inverting and inverting buffers. They have high drive current outputs which enable high speed operation even when driving large bus capacitances. These circuits possess the low power dissipation of CMOS circuitry, yet have speeds comparable to low power Schottky TTL circuits. Both circuits are capable of driving up to 15 low power Schottky inputs.

The ’HC367 and ’HCT367 are non-inverting buffers, whereas the ’HC368 and CD74HCT368 are inverting buffers. These devices have two output enables, one enable ($\overline{OE1}$) controls 4 gates and the other ($\overline{OE2}$) controls the remaining 2 gates.

The ’HCT367 and CD74HCT368 logic families are speed, function and pin compatible with the standard LS logic family.

7.2 Functional Block Diagram

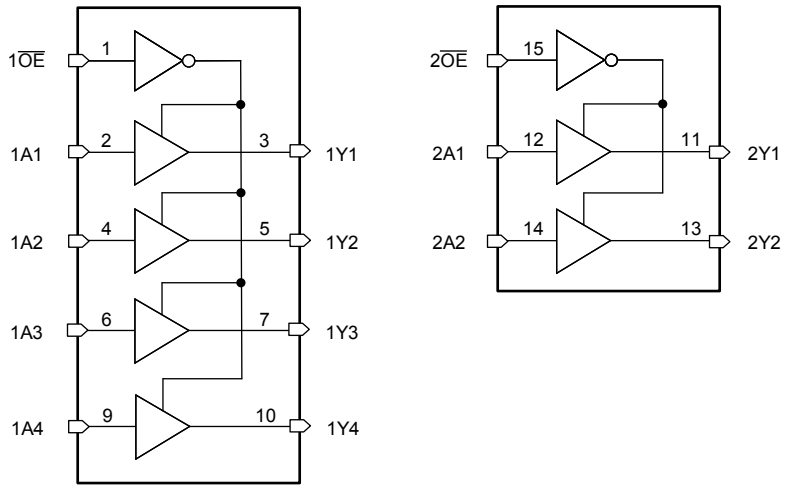

7.3 Device Functional Modes

表 7-1. Truth Table[(1)]

INPUTS		OUTPUTS (Y)	
$\overline{OE}$	A	HC/HCT367	HC/HCT368
L	L	L	H
L	H	H	L
H	X	(Z)	(Z)

(1) H = High Voltage Level, L = Low Voltage Level, X = Don’t Care, Z = High Impedance (OFF) State

Copyright © 2022 Texas Instruments Incorporated

8 Power Supply Recommendations

The power supply can be any voltage between the minimum and maximum supply voltage rating located in the *Recommended Operating Conditions*. Each V_{CC} terminal should have a good bypass capacitor to prevent power disturbance. A 0.1-µF capacitor is recommended for this device. It is acceptable to parallel multiple bypass caps to reject different frequencies of noise. The 0.1-µF and 1-µF capacitors are commonly used in parallel. The bypass capacitor should be installed as close to the power terminal as possible for best results.

9 Layout

9.1 Layout Guidelines

When using multiple-input and multiple-channel logic devices inputs must not ever be left floating. In many cases, functions or parts of functions of digital logic devices are unused; for example, when only two inputs of a triple-input AND gate are used or only 3 of the 4 buffer gates are used. Such unused input pins must not be left unconnected because the undefined voltages at the outside connections result in undefined operational states. All unused inputs of digital logic devices must be connected to a logic high or logic low voltage, as defined by the input voltage specifications, to prevent them from floating. The logic level that must be applied to any particular unused input depends on the function of the device. Generally, the inputs are tied to GND or V_{CC}, whichever makes more sense for the logic function or is more convenient.

Copyright © 2022 Texas Instruments Incorporated

10 Device and Documentation Support

TI offers an extensive line of development tools. Tools and software to evaluate the performance of the device, generate code, and develop solutions are listed below.

10.1 接收文档更新通知

要接收文档更新通知，请导航至 ti.com 上的器件产品文件夹。点击*订阅更新* 进行注册，即可每周接收产品信息更改摘要。有关更改的详细信息，请查看任何已修订文档中包含的修订历史记录。

10.2 支持资源

TI E2E™ 支持论坛是工程师的重要参考资料，可直接从专家获得快速、经过验证的解答和设计帮助。搜索现有解答或提出自己的问题可获得所需的快速设计帮助。

链接的内容由各个贡献者“按原样”提供。这些内容并不构成 TI 技术规范，并且不一定反映 TI 的观点；请参阅 TI 的《使用条款》。

10.3 Trademarks

TI E2E™ is a trademark of Texas Instruments.
所有商标均为其各自所有者的财产。

10.4 Electrostatic Discharge Caution

This integrated circuit can be damaged by ESD. Texas Instruments recommends that all integrated circuits be handled with appropriate precautions. Failure to observe proper handling and installation procedures can cause damage.

ESD damage can range from subtle performance degradation to complete device failure. Precision integrated circuits may be more susceptible to damage because very small parametric changes could cause the device not to meet its published specifications.

10.5 术语表

TI 术语表	本术语表列出并解释了术语、首字母缩略词和定义。

11 Mechanical, Packaging, and Orderable Information

The following pages include mechanical, packaging, and orderable information. This information is the most current data available for the designated devices. This data is subject to change without notice and revision of this document. For browser-based versions of this data sheet, refer to the left-hand navigation.

Copyright © 2022 Texas Instruments Incorporated

重要声明和免责声明

TI 提供技术和可靠性数据（包括数据表）、设计资源（包括参考设计）、应用或其他设计建议、网络工具、安全信息和其他资源，不保证没有瑕疵且不做出任何明示或暗示的担保，包括但不限于对适销性、某特定用途方面的适用性或不侵犯任何第三方知识产权的暗示担保。

这些资源可供使用 TI 产品进行设计的熟练开发人员使用。您将自行承担以下全部责任：(1) 针对您的应用选择合适的 TI 产品，(2) 设计、验证并测试您的应用，(3) 确保您的应用满足相应标准以及任何其他安全、安保或其他要求。这些资源如有变更，恕不另行通知。TI 授权您仅可将这些资源用于研发本资源所述的 TI 产品的应用。严禁对这些资源进行其他复制或展示。您无权使用任何其他 TI 知识产权或任何第三方知识产权。您应全额赔偿因在这些资源的使用中对 TI 及其代表造成的任何索赔、损害、成本、损失和债务，TI 对此概不负责。

TI 提供的产品受 TI 的销售条款 (https:www.ti.com/legal/termsofsale.html) 或 ti.com 上其他适用条款/TI 产品随附的其他适用条款的约束。TI 提供这些资源并不会扩展或以其他方式更改 TI 针对 TI 产品发布的适用的担保或担保免责声明。

邮寄地址：Texas Instruments, Post Office Box 655303, Dallas, Texas 75265
Copyright © 2021，德州仪器 (TI) 公司

PACKAGING INFORMATION

Orderable part number	Status (1)	Material type (2)	Package | Pins	Package qty | Carrier	RoHS (3)	Lead finish/ Ball material (4)	MSL rating/ Peak reflow (5)	Op temp (°C)	Part marking (6)
5962-9070601MEA	Active	Production	CDIP (J) | 16	25 | TUBE	No	SNPB	N/A for Pkg Type	-55 to 125	5962-9070601MEA CD54HCT367F3A
CD54HC367F3A	Active	Production	CDIP (J) | 16	25 | TUBE	No	SNPB	N/A for Pkg Type	-55 to 125	8500201EA CD54HC367F3A
CD54HC367F3A.A	Active	Production	CDIP (J) | 16	25 | TUBE	No	SNPB	N/A for Pkg Type	-55 to 125	8500201EA CD54HC367F3A
CD54HC368F3A	Active	Production	CDIP (J) | 16	25 | TUBE	No	SNPB	N/A for Pkg Type	-55 to 125	5962-8681201EA CD54HC368F3A
CD54HC368F3A.A	Active	Production	CDIP (J) | 16	25 | TUBE	No	SNPB	N/A for Pkg Type	-55 to 125	5962-8681201EA CD54HC368F3A
CD54HCT367F3A	Active	Production	CDIP (J) | 16	25 | TUBE	No	SNPB	N/A for Pkg Type	-55 to 125	5962-9070601MEA CD54HCT367F3A
CD54HCT367F3A.A	Active	Production	CDIP (J) | 16	25 | TUBE	No	SNPB	N/A for Pkg Type	-55 to 125	5962-9070601MEA CD54HCT367F3A
CD74HC367E	Active	Production	PDIP (N) | 16	25 | TUBE	Yes	NIPDAU	N/A for Pkg Type	-55 to 125	CD74HC367E
CD74HC367E.A	Active	Production	PDIP (N) | 16	25 | TUBE	Yes	NIPDAU	N/A for Pkg Type	-55 to 125	CD74HC367E
CD74HC367M	Obsolete	Production	SOIC (D) | 16	-	-	Call TI	Call TI	-55 to 125	HC367M
CD74HC367M96	Active	Production	SOIC (D) | 16	2500 | LARGE T&R	Yes	NIPDAU | SN	Level-1-260C-UNLIM	-55 to 125	HC367M
CD74HC367M96.A	Active	Production	SOIC (D) | 16	2500 | LARGE T&R	Yes	NIPDAU	Level-1-260C-UNLIM	-55 to 125	HC367M
CD74HC367M96G4	Active	Production	SOIC (D) | 16	2500 | LARGE T&R	Yes	NIPDAU	Level-1-260C-UNLIM	-55 to 125	HC367M
CD74HC367M96G4.A	Active	Production	SOIC (D) | 16	2500 | LARGE T&R	Yes	NIPDAU	Level-1-260C-UNLIM	-55 to 125	HC367M
CD74HC367MT	Obsolete	Production	SOIC (D) | 16	-	-	Call TI	Call TI	-55 to 125	HC367M
CD74HC368E	Last Time Buy	Production	PDIP (N) | 16	25 | TUBE	Yes	NIPDAU	N/A for Pkg Type	-55 to 125	CD74HC368E
CD74HC368E.A	Last Time Buy	Production	PDIP (N) | 16	25 | TUBE	Yes	NIPDAU	N/A for Pkg Type	-55 to 125	CD74HC368E
CD74HC368M	Active	Production	SOIC (D) | 16	40 | TUBE	Yes	NIPDAU	Level-1-260C-UNLIM	-55 to 125	HC368M
CD74HC368M.A	Active	Production	SOIC (D) | 16	40 | TUBE	Yes	NIPDAU	Level-1-260C-UNLIM	-55 to 125	HC368M
CD74HCT367E	Active	Production	PDIP (N) | 16	25 | TUBE	Yes	NIPDAU	N/A for Pkg Type	-55 to 125	CD74HCT367E

Orderable part number	Status (1)	Material type (2)	Package | Pins	Package qty | Carrier	RoHS (3)	Lead finish/ Ball material (4)	MSL rating/ Peak reflow (5)	Op temp (°C)	Part marking (6)
CD74HCT367E.A	Active	Production	PDIP (N) | 16	25 | TUBE	Yes	NIPDAU	N/A for Pkg Type	-55 to 125	CD74HCT367E
CD74HCT367M	Obsolete	Production	SOIC (D) | 16	-	-	Call TI	Call TI	-55 to 125	HCT367M
CD74HCT367M96	Active	Production	SOIC (D) | 16	2500 | LARGE T&R	Yes	NIPDAU | SN	Level-1-260C-UNLIM	-55 to 125	HCT367M
CD74HCT367M96.A	Active	Production	SOIC (D) | 16	2500 | LARGE T&R	Yes	NIPDAU	Level-1-260C-UNLIM	-55 to 125	HCT367M
CD74HCT367MT	Obsolete	Production	SOIC (D) | 16	-	-	Call TI	Call TI	-55 to 125	HCT367M
CD74HCT368E	Active	Production	PDIP (N) | 16	25 | TUBE	Yes	NIPDAU	N/A for Pkg Type	-55 to 125	CD74HCT368E
CD74HCT368E.A	Active	Production	PDIP (N) | 16	25 | TUBE	Yes	NIPDAU	N/A for Pkg Type	-55 to 125	CD74HCT368E
CD74HCT368M	Obsolete	Production	SOIC (D) | 16	-	-	Call TI	Call TI	-55 to 125	HCT368M
CD74HCT368M96	Active	Production	SOIC (D) | 16	2500 | LARGE T&R	Yes	NIPDAU	Level-1-260C-UNLIM	-55 to 125	HCT368M
CD74HCT368M96.A	Active	Production	SOIC (D) | 16	2500 | LARGE T&R	Yes	NIPDAU	Level-1-260C-UNLIM	-55 to 125	HCT368M
CD74HCT368MT	Obsolete	Production	SOIC (D) | 16	-	-	Call TI	Call TI	-55 to 125	HCT368M

(1) **Status:** For more details on status, see our product life cycle.

(2) **Material type:** When designated, preproduction parts are prototypes/experimental devices, and are not yet approved or released for full production. Testing and final process, including without limitation quality assurance, reliability performance testing, and/or process qualification, may not yet be complete, and this item is subject to further changes or possible discontinuation. If available for ordering, purchases will be subject to an additional waiver at checkout, and are intended for early internal evaluation purposes only. These items are sold without warranties of any kind.

(3) **RoHS values:** Yes, No, RoHS Exempt. See the TI RoHS Statement for additional information and value definition.

(4) **Lead finish/Ball material:** Parts may have multiple material finish options. Finish options are separated by a vertical ruled line. Lead finish/Ball material values may wrap to two lines if the finish value exceeds the maximum column width.

(5) **MSL rating/Peak reflow:** The moisture sensitivity level ratings and peak solder (reflow) temperatures. In the event that a part has multiple moisture sensitivity ratings, only the lowest level per JEDEC standards is shown. Refer to the shipping label for the actual reflow temperature that will be used to mount the part to the printed circuit board.

(6) **Part marking:** There may be an additional marking, which relates to the logo, the lot trace code information, or the environmental category of the part.

Multiple part markings will be inside parentheses. Only one part marking contained in parentheses and separated by a "~" will appear on a part. If a line is indented then it is a continuation of the previous line and the two combined represent the entire part marking for that device.

Important Information and Disclaimer: The information provided on this page represents TI's knowledge and belief as of the date that it is provided. TI bases its knowledge and belief on information provided by third parties, and makes no representation or warranty as to the accuracy of such information. Efforts are underway to better integrate information from third parties. TI has taken and continues to take reasonable steps to provide representative

and accurate information but may not have conducted destructive testing or chemical analysis on incoming materials and chemicals. TI and TI suppliers consider certain information to be proprietary, and thus CAS numbers and other limited information may not be available for release.

In no event shall TI's liability arising out of such information exceed the total purchase price of the TI part(s) at issue in this document sold by TI to Customer on an annual basis.

OTHER QUALIFIED VERSIONS OF CD54HC367, CD54HC368, CD54HCT367, CD74HC367, CD74HC368, CD74HCT367 :

- Catalog : CD74HC367, CD74HC368, CD74HCT367
- Military : CD54HC367, CD54HC368, CD54HCT367

NOTE: Qualified Version Definitions:

- Catalog - TI's standard catalog product
- Military - QML certified for Military and Defense Applications

TAPE AND REEL INFORMATION

REEL DIMENSIONS

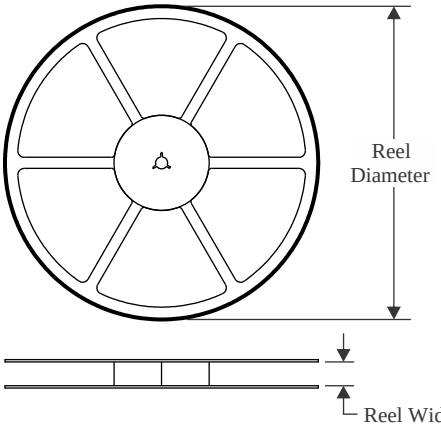

TAPE DIMENSIONS

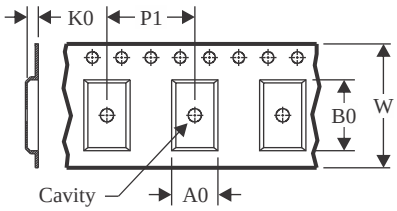

A0	Dimension designed to accommodate the component width
B0	Dimension designed to accommodate the component length
K0	Dimension designed to accommodate the component thickness
W	Overall width of the carrier tape
P1	Pitch between successive cavity centers

QUADRANT ASSIGNMENTS FOR PIN 1 ORIENTATION IN TAPE

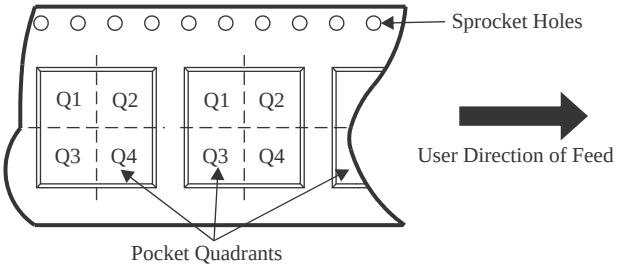

*All dimensions are nominal

Device	Package Type	Package Drawing	Pins	SPQ	Reel Diameter (mm)	Reel Width W1 (mm)	A0 (mm)	B0 (mm)	K0 (mm)	P1 (mm)	W (mm)	Pin1 Quadrant
CD74HC367M96	SOIC	D	16	2500	330.0	16.4	6.5	10.3	2.1	8.0	16.0	Q1
CD74HC367M96G4	SOIC	D	16	2500	330.0	16.4	6.5	10.3	2.1	8.0	16.0	Q1
CD74HCT367M96	SOIC	D	16	2500	330.0	16.4	6.5	10.3	2.1	8.0	16.0	Q1
CD74HCT368M96	SOIC	D	16	2500	330.0	16.4	6.5	10.3	2.1	8.0	16.0	Q1

TAPE AND REEL BOX DIMENSIONS

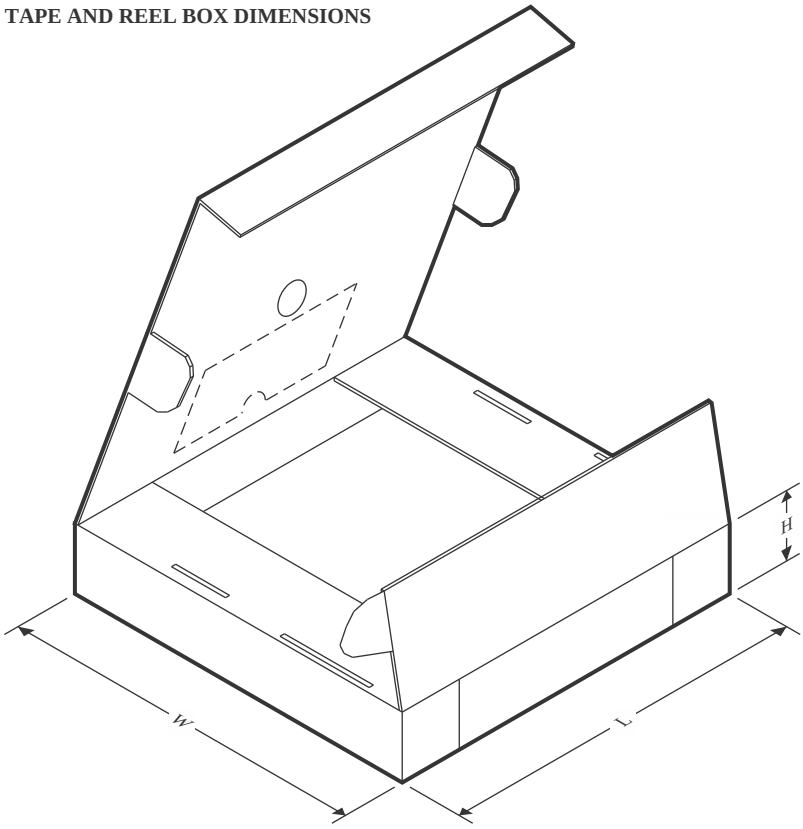

*All dimensions are nominal

Device	Package Type	Package Drawing	Pins	SPQ	Length (mm)	Width (mm)	Height (mm)
CD74HC367M96	SOIC	D	16	2500	353.0	353.0	32.0
CD74HC367M96G4	SOIC	D	16	2500	353.0	353.0	32.0
CD74HCT367M96	SOIC	D	16	2500	353.0	353.0	32.0
CD74HCT368M96	SOIC	D	16	2500	353.0	353.0	32.0

TUBE

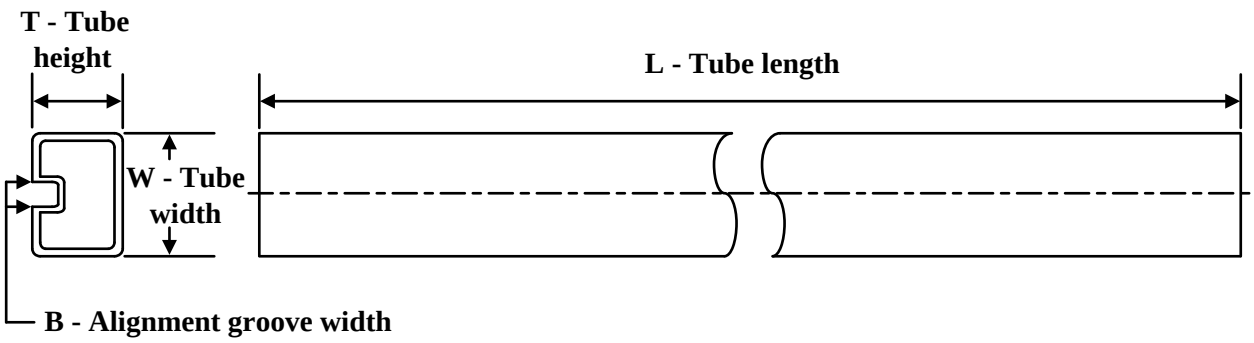

*All dimensions are nominal

Device	Package Name	Package Type	Pins	SPQ	L (mm)	W (mm)	T (µm)	B (mm)
CD74HC367E	N	PDIP	16	25	506	13.97	11230	4.32
CD74HC367E	N	PDIP	16	25	506	13.97	11230	4.32
CD74HC367E.A	N	PDIP	16	25	506	13.97	11230	4.32
CD74HC367E.A	N	PDIP	16	25	506	13.97	11230	4.32
CD74HC368E	N	PDIP	16	25	506	13.97	11230	4.32
CD74HC368E	N	PDIP	16	25	506	13.97	11230	4.32
CD74HC368E.A	N	PDIP	16	25	506	13.97	11230	4.32
CD74HC368E.A	N	PDIP	16	25	506	13.97	11230	4.32
CD74HC368M	D	SOIC	16	40	507	8	3940	4.32
CD74HC368M.A	D	SOIC	16	40	507	8	3940	4.32
CD74HCT367E	N	PDIP	16	25	506	13.97	11230	4.32
CD74HCT367E	N	PDIP	16	25	506	13.97	11230	4.32
CD74HCT367E.A	N	PDIP	16	25	506	13.97	11230	4.32
CD74HCT367E.A	N	PDIP	16	25	506	13.97	11230	4.32
CD74HCT368E	N	PDIP	16	25	506	13.97	11230	4.32
CD74HCT368E	N	PDIP	16	25	506	13.97	11230	4.32
CD74HCT368E.A	N	PDIP	16	25	506	13.97	11230	4.32
CD74HCT368E.A	N	PDIP	16	25	506	13.97	11230	4.32

D (R–PDSO–G16) PLASTIC SMALL OUTLINE

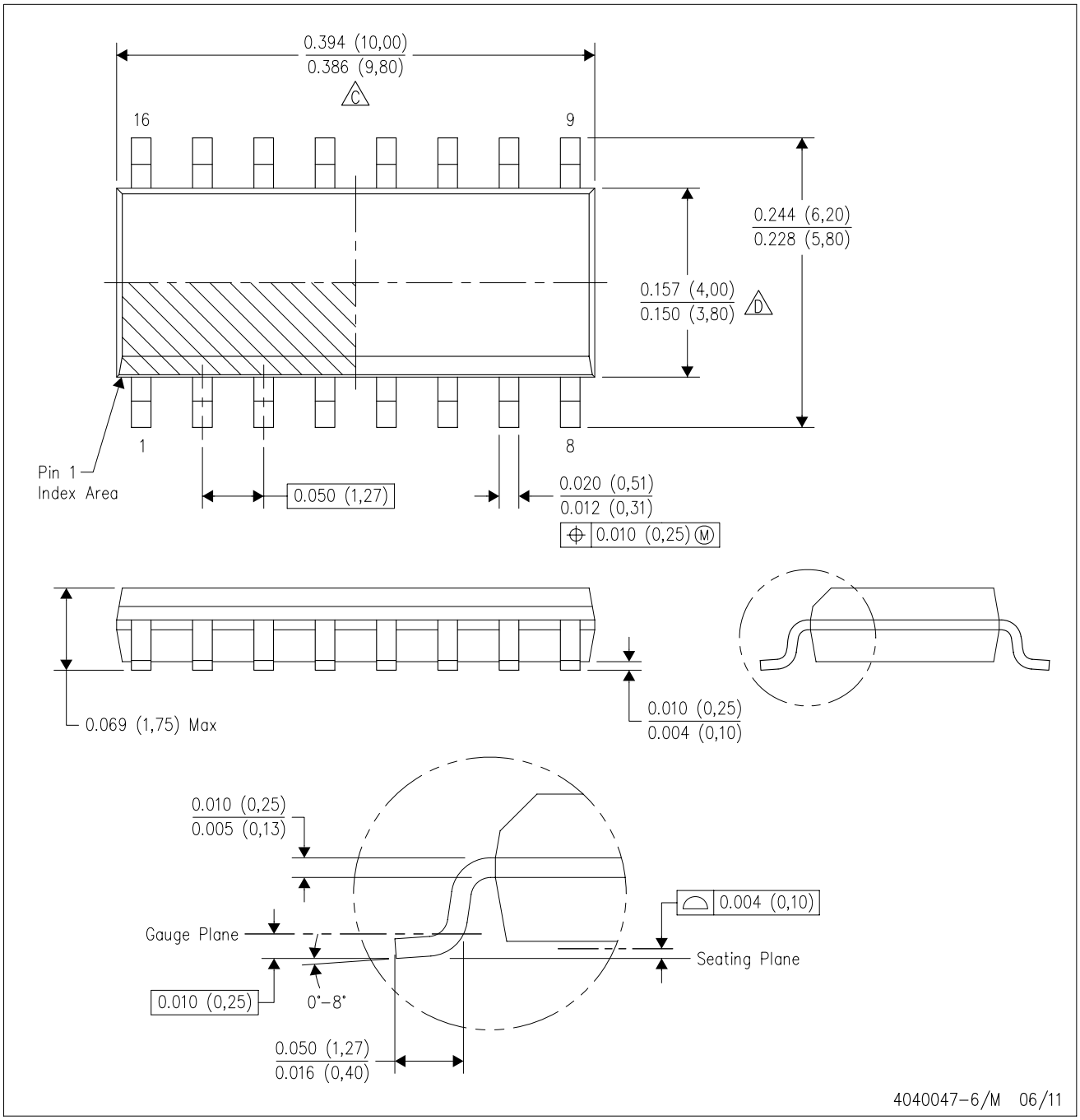

NOTES:
A. All linear dimensions are in inches (millimeters).
B. This drawing is subject to change without notice.
C. Body length does not include mold flash, protrusions, or gate burrs. Mold flash, protrusions, or gate burrs shall not exceed 0.006 (0,15) each side.
D. Body width does not include interlead flash. Interlead flash shall not exceed 0.017 (0,43) each side.
E. Reference JEDEC MS–012 variation AC.

J (R–GDIP–T**) CERAMIC DUAL IN–LINE PACKAGE

14 LEADS SHOWN

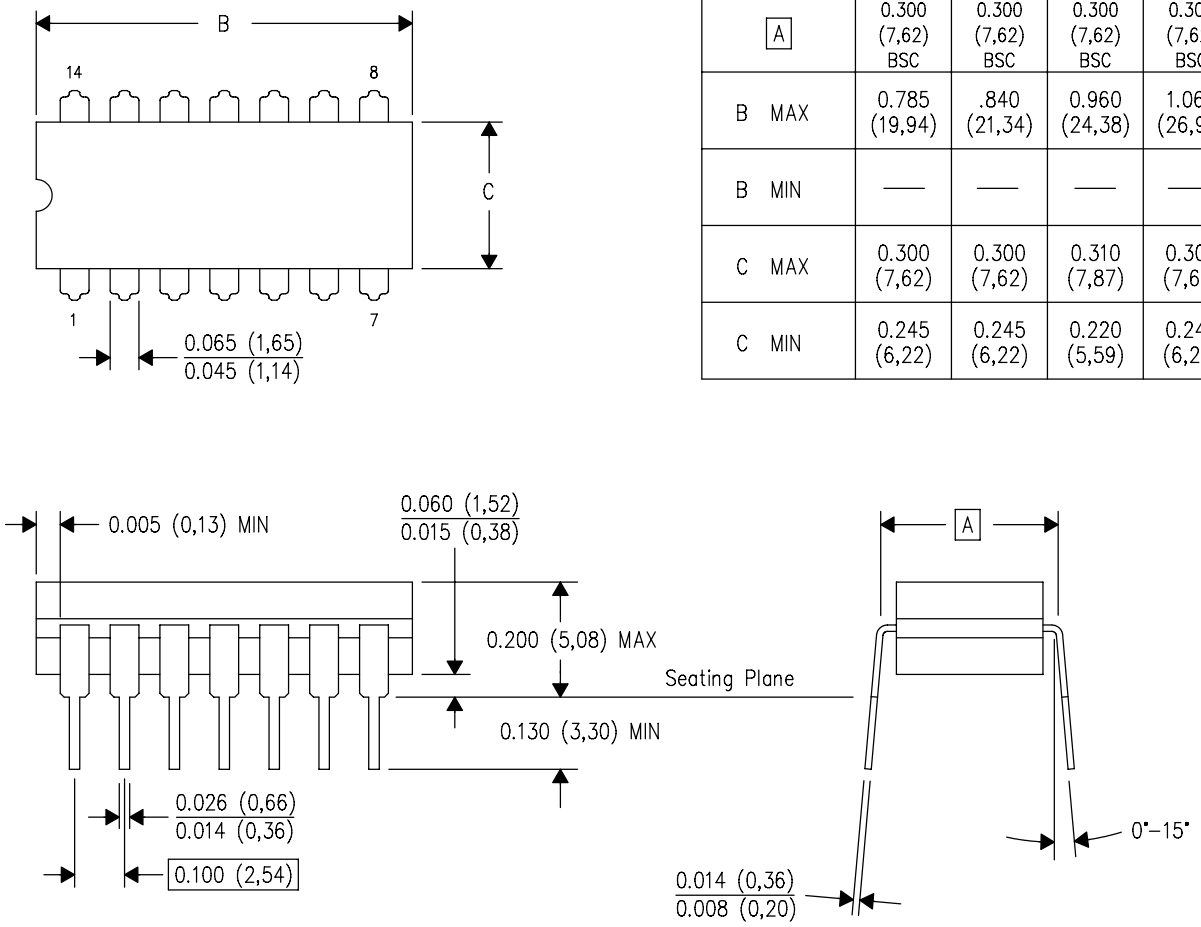

DIM \ PINS **	14	16	18	20
A	0.300 (7,62) BSC	0.300 (7,62) BSC	0.300 (7,62) BSC	0.300 (7,62) BSC
B MAX	0.785 (19,94)	.840 (21,34)	0.960 (24,38)	1.060 (26,92)
B MIN	—	—	—	—
C MAX	0.300 (7,62)	0.300 (7,62)	0.310 (7,87)	0.300 (7,62)
C MIN	0.245 (6,22)	0.245 (6,22)	0.220 (5,59)	0.245 (6,22)

4040083/F 03/03

NOTES:
- A. All linear dimensions are in inches (millimeters).
- B. This drawing is subject to change without notice.
- C. This package is hermetically sealed with a ceramic lid using glass frit.
- D. Index point is provided on cap for terminal identification only on press ceramic glass frit seal only.
- E. Falls within MIL STD 1835 GDIP1–T14, GDIP1–T16, GDIP1–T18 and GDIP1–T20.

N (R–PDIP–T**) PLASTIC DUAL–IN–LINE PACKAGE

16 PINS SHOWN

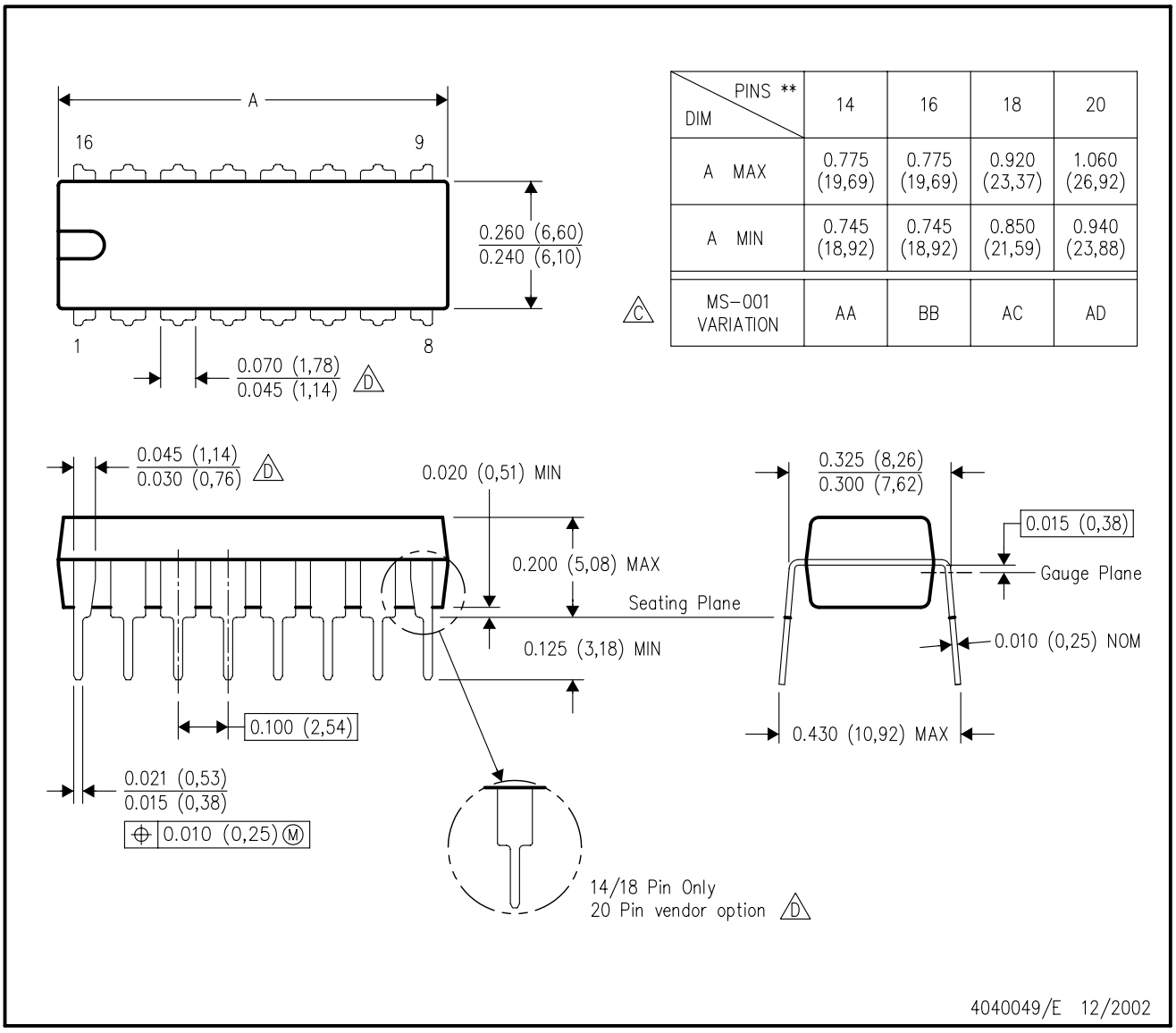

DIM \ PINS **	14	16	18	20
A MAX	0.775 (19,69)	0.775 (19,69)	0.920 (23,37)	1.060 (26,92)
A MIN	0.745 (18,92)	0.745 (18,92)	0.850 (21,59)	0.940 (23,88)
MS–001 VARIATION (C)	AA	BB	AC	AD

NOTES:
A. All linear dimensions are in inches (millimeters).
B. This drawing is subject to change without notice.
C. Falls within JEDEC MS–001, except 18 and 20 pin minimum body length (Dim A).
D. The 20 pin end lead shoulder width is a vendor option, either half or full width.

重要通知和免责声明

TI“按原样”提供技术和可靠性数据（包括数据表）、设计资源（包括参考设计）、应用或其他设计建议、网络工具、安全信息和其他资源，不保证没有瑕疵且不做出任何明示或暗示的担保，包括但不限于对适销性、与某特定用途的适用性或不侵犯任何第三方知识产权的暗示担保。

这些资源可供使用 TI 产品进行设计的熟练开发人员使用。您将自行承担以下全部责任：(1) 针对您的应用选择合适的 TI 产品，(2) 设计、验证并测试您的应用，(3) 确保您的应用满足相应标准以及任何其他安全、安保法规或其他要求。

这些资源如有变更，恕不另行通知。TI 授权您仅可将这些资源用于研发本资源所述的 TI 产品的相关应用。严禁以其他方式对这些资源进行复制或展示。您无权使用任何其他 TI 知识产权或任何第三方知识产权。对于因您对这些资源的使用而对 TI 及其代表造成的任何索赔、损害、成本、损失和债务，您将全额赔偿，TI 对此概不负责。

TI 提供的产品受 TI 销售条款)、TI 通用质量指南 或 ti.com 上其他适用条款或 TI 产品随附的其他适用条款的约束。TI 提供这些资源并不会扩展或以其他方式更改 TI 针对 TI 产品发布的适用的担保或担保免责声明。 除非德州仪器 (TI) 明确将某产品指定为定制产品或客户特定产品，否则其产品均为按确定价格收入目录的标准通用器件。

TI 反对并拒绝您可能提出的任何其他或不同的条款。

版权所有 © 2026，德州仪器 (TI) 公司

最后更新日期：2025 年 10 月