CDx4HC240、CDx4HCT240、CD74HC241、CDx4HCT241、CDx4HC244、CDx4HCT244 具有三态输出的高速 CMOS 逻辑八路缓冲器/线路驱动器

1 特性

- HC/HCT240 反相
- HC/HCT241 同相
- HC/HCT244 同相
- 当 V_{CC} = 5V、C_L = 15pF、T_A = 25℃ 时，HC240 的传播延迟典型值为 8ns
- 三态输出
- 缓冲输入
- 高电流总线驱动器输出
- 扇出（在温度范围内）
  - 标准输出：10 个 LSTTL 负载
  - 总线驱动器输出：15 个 LSTTL 负载
- 宽工作温度范围：–55℃ 至 125℃
- 平衡的传播延迟及转换时间
- 与 LSTTL 逻辑 IC 相比，可显著降低功耗
- HC 类型：
  - 工作电压为 2V 至 6V
  - 高抗噪性：当 V_{CC} = 5 V 时，N_{IL} = 30%，N_{IH} = V_{CC} 的 30%
- HCT 类型：
  - 工作电压为 4.5 V 至 5.5 V
  - 直接 LSTTL 输入逻辑兼容性，V_{IL} = 0.8V（最大值），V_{IH} = 2V（最小值）
  - CMOS 输入兼容性，当电压为 V_{OL}、V_{OH} 时，I_I ≤ 1μA

2 说明

’HC240 和 ’HCT240 是具有两个低电平有效输出使能端的反相三态缓冲器。CD74HC241、’HCT241、’HC244 和 ’HCT244 都是同相三态缓冲器，区别仅在于 241 具有一个高电平有效和一个低电平有效的输出使能端，而 244 具有两个低电平有效输出使能端。全部三种类型都具有相同的引脚排列。

封装信息

器件型号	封装[(1)]	封装尺寸（标称值）
CD74HC240	M（SOIC，20）	12.80mm × 7.50mm
	E（PDIP，20）	25.40mm × 6.35mm
CD54HC240	F（CDIP，20）	26.92mm × 6.92mm
CD74HCT240	M（SOIC，20）	12.80mm × 7.50mm
	E（PDIP，20）	25.40mm × 6.35mm
	PW（TSSOP，20）	6.50mm × 4.40mm
CD54HCT240	F（CDIP，20）	26.92mm × 6.92mm
CD74HC241	M（SOIC，20）	12.80mm × 7.50mm
	E（PDIP，20）	25.40mm × 6.35mm
CD74HCT241	M（SOIC，20）	12.80mm × 7.50mm
	E（PDIP，20）	25.40mm × 6.35mm
CD54HCT241	F（CDIP，20）	26.92mm × 6.92mm
CD74HC244	M（SOIC，20）	12.80mm × 7.50mm
	E（PDIP，20）	25.40mm × 6.35mm
CD54HC244	F（CDIP，20）	26.92mm × 6.92mm
CD74HCT244	M（SOIC，20）	12.80mm × 7.50mm
	E（PDIP，20）	25.40mm × 6.35mm
CD54HCT244	F（CDIP，20）	26.92mm × 6.92mm

(1) 如需了解所有可用封装，请参阅数据表末尾的可订购产品附录。

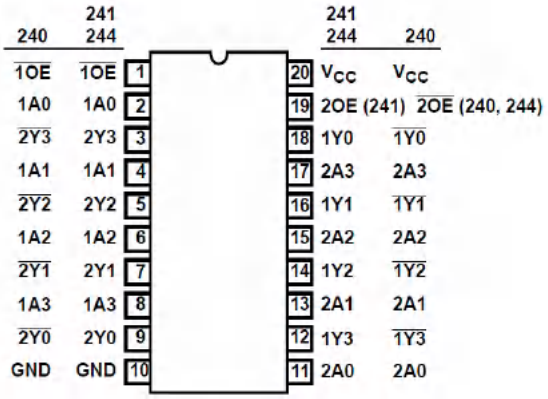

引脚排列图

本文档旨在为方便起见，提供有关 TI 产品中文版本的信息，以确认产品的概要。有关适用的官方英文版本的最新信息，请访问 www.ti.com，其内容始终优先。TI 不保证翻译的准确性和有效性。在实际设计之前，请务必参考最新版本的英文版本。

Table of Contents

1 特性 1
2 说明 1
3 Revision History 2
4 Pin Configuration and Functions 3
5 Specifications 4
5.1 Absolute Maximum Ratings[(1)] 4
5.2 Recommended Operating Conditions 4
5.3 Thermal Information 4
5.4 Electrical Characteristics '240 5
5.5 Electrical Characteristics '241 6
5.6 Electrical Characteristics '244 7
5.7 Switching Characteristics '240 9
5.8 Switching Characteristics '241 9
5.9 Switching Characteristics '244 10
6 Parameter Measurement Information 12
7 Detailed Description 14
7.1 Overview 14
7.2 Functional Block Diagram 14
8 Power Supply Recommendations 16
9 Layout 16
9.1 Layout Guidelines 16
10 Device and Documentation Support 17
10.1 接收文档更新通知 17
10.2 支持资源 17
10.3 Trademarks 17
10.4 Electrostatic Discharge Caution 17
10.5 术语表 17
11 Mechanical, Packaging, and Orderable Information 17

3 Revision History

注：以前版本的页码可能与当前版本的页码不同

Changes from Revision E (October 2004) to Revision F (February 2022)	Page
• 更新了整个文档中的编号、格式、表格、图和交叉参考，以反映现代数据表标准	1

Changes from Revision F (February 2022) to Revision G (October 2022)	Page
• Increased R θ JA for packages: DW (73 to 109.1); DB (82 to 122.7); N (67 to 84.6); NS (64 to 113.4); PW (108 to 131.8)	4

Copyright © 2022 Texas Instruments Incorporated

4 Pin Configuration and Functions

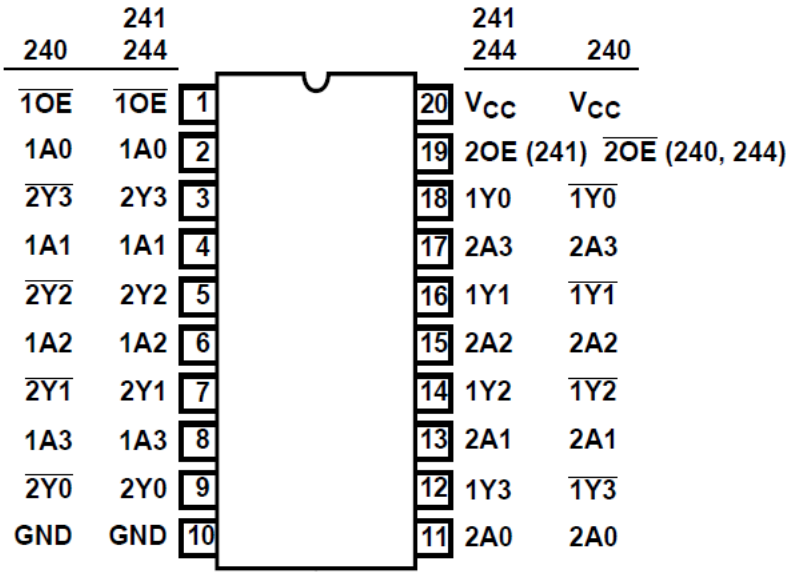

J, N, DW, or PW package
20-Pin CDIP, PDIP, SOIC, or TSSOP
Top View

5 Specifications

5.1 Absolute Maximum Ratings[1]

			MIN	MAX	UNIT
V_{CC}	Supply voltage		–0.5	7	V
I_{IK}	Input clamp diode current	For V_I < –0.5 V or V_I > V_{CC} + 0.5 V		±20	mA
I_{OK}	Output clamp diode current	For V_O < –0.5 V or V_O >V_{CC} + 0.5 V		±20	mA
I_O	Drain current, per output	For –0.5 V < V_O < V_{CC} + 0.5 V		±35	mA
I_O	Output source or sink current per output pin	For V_O > –0.5 V or V_O < V_{CC} + 0.5 V		±25	mA
I_{CC}	Continuous current through V_{CC} or GND			±70	mA
T_J	Junction temperature			150	℃
T_{stg}	Storage temperature range		–65	150	℃
	Lead temperature (Soldering 10s) (SOIC - lead tips only)			300	℃

(1) Stresses beyond those listed under *absolute maximum ratings* may cause permanent damage to the device. These are stress ratings only and functional operation of the device at these or any other conditions beyond those indicated under *recommended operating conditions* is not implied. Exposure to absolute-maximum-rated conditions for extended periods may affect device reliability.

5.2 Recommended Operating Conditions

			MIN	MAX	UNIT
V_{CC}	Supply voltage range	HC types	2	6	V
		HCT types	4.5	5.5	
V_I, V_O	Input or output voltage		0	V_{CC}	V
t_t	Input rise and fall time	2 V		1000	ns
		4.5 V		500	
		6 V		400	
T_A	Temperature range		–55	125	℃

5.3 Thermal Information

THERMAL METRIC		DW (SOIC) 20 PINS	DB (SSOP) 20 PINS	N (PDIP) 20 PINS	NS (SO) 20 PINS	PW (TSSOP) 20 PINS	UNIT
$R_{\theta JA}$	Junction-to-ambient thermal resistance[1]	109.1	122.7	84.6	113.4	131.8	°C/W
$R_{\theta JC (top)}$	Junction-to-case (top) thermal resistance	76	81.6	72.5	78.6	72.2	°C/W
$R_{\theta JB}$	Junction-to-board thermal resistance	77.6	77.5	65.3	78.4	82.8	°C/W
Ψ_{JT}	Junction-to-top characterization parameter	51.5	46.1	55.3	47.1	21.5	°C/W
Ψ_{JB}	Junction-to-board characterization parameter	77.1	77.1	65.2	78.1	82.4	°C/W
$R_{\theta JC (bot)}$	Junction-to-case (bottom) thermal resistance	N/A	N/A	N/A	N/A	N/A	°C/W

(1) For more information about traditional and new thermal metrics, see the *Semiconductor and IC package thermal metrics* application report.

Copyright © 2022 Texas Instruments Incorporated

5.4 Electrical Characteristics '240

PARAMETER		TEST CONDITIONS(2)	V_{CC} (V)	25℃			–40℃ to 85℃		–55℃ to 125℃		UNIT
				MIN	TYP	MAX	MIN	MAX	MIN	MAX	
HC TYPES											
V_{IH}	High level input voltage		2	1.5			1.5		1.5		V
			4.5	3.15			3.15		3.15		
			6	4.2			4.2		4.2		
V_{IL}	Low level input voltage		2			0.5		0.5		0.5	V
			4.5			1.35		1.35		1.35	
			6			1.8		1.8		1.8	
V_{OH}	High level output voltage	I_{OH} = – 20 μA	2	1.9			1.9		1.9		V
		I_{OH} = – 20 μA	4.5	4.4			4.4		4.4		
		I_{OH} = – 20 μA	6	5.9			5.9		5.9		
	High level output voltage	I_{OH} = – 6 mA	4.5	3.98			3.84		3.7		
		I_{OH} = – 7.8 mA	6	5.48			5.34		5.2		
V_{OL}	Low level output voltage	I_{OL} = 20 μA	2			0.1		0.1		0.1	V
		I_{OL} = 20 μA	4.5			0.1		0.1		0.1	
		I_{OL} = 20 μA	6			0.1		0.1		0.1	
	Low level output voltage	I_{OL} = 6 mA	4.5			0.26		0.33		0.4	
		I_{OL} = 7.8 mA	6			0.26		0.33		0.4	
I_I	Input leakage current	V_I = V_{CC} or GND	6			±0.1		±1		±1	μA
I_{CC}	Supply current	V_I = V_{CC} or GND	6			8		80		160	μA
I_{OZ}	Three-state leakage current		6			±0.5		±0.5		±10	μA
HCT TYPES											
V_{IH}	High level input voltage		4.5 to 5.5	2			2		2		V
V_{IL}	Low level input voltage		4.5 to 5.5			0.8		0.8		0.8	V
V_{OH}	High level output voltage	V_{OH} = – 20 μA	4.5	4.4			4.4		4.4		V
	High level output voltage	V_{OH} = – 6 mA	4.5	3.98			3.84		3.7		
V_{OL}	Low level output voltage	V_{OL} = 20 μA	4.5			0.1		0.1		0.1	V
	Low level output voltage	V_{OL} = 6 mA	4.5			0.26		0.33		0.4	
I_I	Input leakage current	V_I = V_{CC} or GND	5.5			±0.1		±1		±1	μA
I_{CC}	Supply current	V_I = V_{CC} or GND	5.5			8		80		160	μA
I_{OZ}	Three-state leakage current		5.5			±0.5		±5		±10	μA
ΔI_{CC} (1)	Additional supply current per input pin	nA0 - A3 inputs held at V_{CC} – 2.1	4.5 to 5.5		100	540		675		735	μA
		$1\overline{OE}$ inputs held at V_{CC} – 2.1	4.5 to 5.5		100	252		315		343	μA
		$2\overline{OE}$ inputs held at V_{CC} – 2.1	4.5 to 5.5		100	252		315		343	μA

(1) For dual-supply systems theoretical worst case (V_I = 2.4 V, V_{CC} = 5.5 V) specification is 1.8 mA.

Copyright © 2022 Texas Instruments Incorporated

(2) $V_I = V_{IH}$ or V_{IL}, unless otherwise noted.

5.5 Electrical Characteristics '241

PARAMETER		TEST CONDITIONS(2)	V_{CC} (V)	25℃			–40℃ to 85℃		–55℃ to 125℃		UNIT
				MIN	TYP	MAX	MIN	MAX	MIN	MAX	
HC TYPES											
V_{IH}	High level input voltage		2	1.5			1.5		1.5		V
			4.5	3.15			3.15		3.15		
			6	4.2			4.2		4.2		
V_{IL}	Low level input voltage		2			0.5		0.5		0.5	V
			4.5			1.35		1.35		1.35	
			6			1.8		1.8		1.8	
V_{OH}	High level output voltage	I_{OH} = – 20 μA	2	1.9			1.9		1.9		V
		I_{OH} = – 20 μA	4.5	4.4			4.4		4.4		
		I_{OH} = – 20 μA	6	5.9			5.9		5.9		
	High level output voltage	I_{OH} = – 6 mA	4.5	3.98			3.84		3.7		
		I_{OH} = – 7.8 mA	6	5.48			5.34		5.2		
V_{OL}	Low level output voltage	I_{OL} = 20 μA	2			0.1		0.1		0.1	V
		I_{OL} = 20 μA	4.5			0.1		0.1		0.1	
		I_{OL} = 20 μA	6			0.1		0.1		0.1	
	Low level output voltage	I_{OL} = 6 mA	4.5			0.26		0.33		0.4	
		I_{OL} = 7.8 mA	6			0.26		0.33		0.4	
I_I	Input leakage current	$V_I = V_{CC}$ or GND	6			±0.1		±1		±1	μA
I_{CC}	Supply current	$V_I = V_{CC}$ or GND	6			8		80		160	μA
I_{OZ}	Three-state leakage current		6			±0.5		±0.5		±10	μA
HCT TYPES											
V_{IH}	High level input voltage		4.5 to 5.5	2			2		2		V
V_{IL}	Low level input voltage		4.5 to 5.5			0.8		0.8		0.8	V
V_{OH}	High level output voltage	V_{OH} = – 20 μA	4.5	4.4			4.4		4.4		V
	High level output voltage	V_{OH} = – 6 mA	4.5	3.98			3.84		3.7		
V_{OL}	Low level output voltage	V_{OL} = 20 μA	4.5			0.1		0.1		0.1	V
	Low level output voltage	V_{OL} = 6 mA	4.5			0.26		0.33		0.4	
I_I	Input leakage current	$V_I = V_{CC}$ or GND	5.5			±0.1		±1		±1	μA
I_{CC}	Supply current	$V_I = V_{CC}$ or GND	5.5			8		80		160	μA
I_{OZ}	Three-state leakage current		5.5			±0.5		±5		±10	μA

Copyright © 2022 Texas Instruments Incorporated

5.5 Electrical Characteristics '241 (continued)

PARAMETER		TEST CONDITIONS(2)	V_{CC} (V)	25℃			–40℃ to 85℃		–55℃ to 125℃		UNIT
				MIN	TYP	MAX	MIN	MAX	MIN	MAX	
ΔI_{CC} (1)	Additional supply current per input pin	nA0 - A3 inputs held at V_{CC} – 2.1	4.5 to 5.5		100	252		315		343	µA
		$1\overline{OE}$ inputs held at V_{CC} – 2.1	4.5 to 5.5		100	252		315		343	µA
		2OE inputs held at V_{CC} – 2.1	4.5 to 5.5		100	540		675		735	µA

(1) For dual-supply systems theoretical worst case (V_I = 2.4 V, V_{CC} = 5.5 V) specification is 1.8 mA.
(2) $V_I = V_{IH}$ or V_{IL}, unless otherwise noted.

5.6 Electrical Characteristics '244

PARAMETER		TEST CONDITIONS(2)	V_{CC} (V)	25℃			–40℃ to 85℃		–55℃ to 125℃		UNIT
				MIN	TYP	MAX	MIN	MAX	MIN	MAX	
HC TYPES											
V_{IH}	High level input voltage		2	1.5			1.5		1.5		V
			4.5	3.15			3.15		3.15		
			6	4.2			4.2		4.2		
V_{IL}	Low level input voltage		2			0.5		0.5		0.5	V
			4.5			1.35		1.35		1.35	
			6			1.8		1.8		1.8	
V_{OH}	High level output voltage	I_{OH} = – 20 µA	2	1.9			1.9		1.9		V
		I_{OH} = – 20 µA	4.5	4.4			4.4		4.4		
		I_{OH} = – 20 µA	6	5.9			5.9		5.9		
	High level output voltage	I_{OH} = – 6 mA	4.5	3.98			3.84		3.7		
		I_{OH} = – 7.8 mA	6	5.48			5.34		5.2		
V_{OL}	Low level output voltage	I_{OL} = 20 µA	2			0.1		0.1		0.1	V
		I_{OL} = 20 µA	4.5			0.1		0.1		0.1	
		I_{OL} = 20 µA	6			0.1		0.1		0.1	
	Low level output voltage	I_{OL} = 6 mA	4.5			0.26		0.33		0.4	
		I_{OL} = 7.8 mA	6			0.26		0.33		0.4	
I_I	Input leakage current	$V_I = V_{CC}$ or GND	6			±0.1		±1		±1	µA
I_{CC}	Supply current	$V_I = V_{CC}$ or GND	6			8		80		160	µA
I_{OZ}	Three-state leakage current		6			±0.5		±0.5		±10	µA
HCT TYPES											
V_{IH}	High level input voltage		4.5 to 5.5	2			2		2		V
V_{IL}	Low level input voltage		4.5 to 5.5			0.8		0.8		0.8	V
V_{OH}	High level output voltage	V_{OH} = – 20 µA	4.5	4.4			4.4		4.4		V
	High level output voltage	V_{OH} = – 6 mA	4.5	3.98			3.84		3.7		

Copyright © 2022 Texas Instruments Incorporated

5.6 Electrical Characteristics '244 (continued)

PARAMETER		TEST CONDITIONS(2)	V_{CC} (V)	25℃			–40℃ to 85℃		–55℃ to 125℃		UNIT
				MIN	TYP	MAX	MIN	MAX	MIN	MAX	
V_{OL}	Low level output voltage	V_{OL} = 20 μA	4.5			0.1		0.1		0.1	V
	Low level output voltage	V_{OL} = 6 mA	4.5			0.26		0.33		0.4	
I_I	Input leakage current	$V_I = V_{CC}$ or GND	5.5			±0.1		±1		±1	μA
I_{CC}	Supply current	$V_I = V_{CC}$ or GND	5.5			8		80		160	μA
I_{OZ}	Three-state leakage current		5.5			±0.5		±5		±10	μA
ΔI_{CC} (1)	Additional supply current per input pin	nA0 - A3 inputs held at V_{CC} – 2.1	4.5 to 5.5		100	252		315		343	μA
		$1\overline{OE}$ inputs held at V_{CC} – 2.1	4.5 to 5.5		100	252		315		343	μA
		$2\overline{OE}$ inputs held at V_{CC} – 2.1	4.5 to 5.5		100	252		315		343	μA

(1) For dual-supply systems theoretical worst case (V_I = 2.4 V, V_{CC} = 5.5 V) specification is 1.8 mA.
(2) $V_I = V_{IH}$ or V_{IL}, unless otherwise noted.

Copyright © 2022 Texas Instruments Incorporated

5.7 Switching Characteristics '240

C_L = 50 pF, Input t_r, t_f = 6 ns

PARAMETER		V_{CC} (V)	25℃			–40℃ to 85℃			–55℃ to 125℃			UNIT
			MIN	TYP	MAX	MIN	TYP	MAX	MIN	TYP	MAX	
HC TYPES												
t_{PLH}, t_{PHL}	Propagation delay Data to outputs	2			100			125			150	ns
		4.5		8[3]	20			25			30	
		6			17			21			26	
t_{THL}, t_{TLH}	Output enable and disable time	2			150			190			225	ns
		4.5			30			38			45	
		5		12								
		6			26			33			38	
t_{TLH}, t_{THL}	Output transition time	2			60			75			90	ns
		4.5			12			15			18	
		6			10			13			15	
C_I	Input capacitance		10		10			10			10	pF
C_O	Three-state output capacitance				20			20			20	pF
C_{PD}	Power dissipation capacitance[1] [2]	5		38[3]								pF
HCT TYPES												
t_{PHL}, t_{PLH}	Data to outputs	4.5		9[3]	22			28			33	ns
t_{TLH}, t_{THL}	Output enable and disable times	4.5			30			38			45	ns
t_{THL}, t_{TLH}	Output transition time	4.5			12			15			18	ns
C_I	Input capacitance		10		10			10			10	pF
C_{PD}	Power dissipation capacitance[1] [2]	5		40								pF

(1) C_{PD} is used to determine the dynamic power consumption, per channel.
(2) $P_D = V_{CC}{}^2 f_i (C_{PD} + C_L)$ where f_i = input frequency, f_O = output frequency, C_L = output load capacitance, V_{CC} = supply voltage.
(3) C_L = 15 pF and V_{CC} = 5 V.

5.8 Switching Characteristics '241

C_L = 50 pF, Input t_r, t_f = 6 ns

PARAMETER		V_{CC} (V)	25℃			–40℃ to 85℃			–55℃ to 125℃			UNIT
			MIN	TYP	MAX	MIN	TYP	MAX	MIN	TYP	MAX	
HC TYPES												
t_{PLH}, t_{PHL}	Propagation delay Data to outputs	2			110			140			165	ns
		4.5		9[3]	22			28			33	
		6			19			24			28	
t_{THL}, t_{TLH}	Output enable and disable time	2			150			190			225	ns
		4.5			30			38			45	
		5		12								
		6			26			33			38	
t_{TLH}, t_{THL}	Output transition time	2			60			75			90	ns
		4.5			12			15			18	
		6			10			13			15	
C_I	Input capacitance		10		10			10			10	pF
C_O	Three-state output capacitance				20			20			20	pF
C_{PD}	Power dissipation capacitance[1] [2]	5		34[3]								pF
HCT TYPES												
t_{PHL}, t_{PLH}	Data to outputs	4.5		10[3]	25			31			38	ns
t_{TLH}, t_{THL}	Output enable and disable times	4.5			30			38			45	ns
t_{THL}, t_{TLH}	Output transition time	4.5			12			15			18	ns
C_I	Input capacitance		10		10			10			10	pF
C_{PD}	Power dissipation capacitance[1] [2]	5		38								pF

(1) C_{PD} is used to determine the dynamic power consumption, per channel.
(2) $P_D = V_{CC}{}^2 f_i (C_{PD} + C_L)$ where f_i = input frequency, f_O = output frequency, C_L = output load capacitance, V_{CC} = supply voltage.
(3) C_L = 15 pF and V_{CC} = 5 V.

Copyright © 2022 Texas Instruments Incorporated

5.9 Switching Characteristics '244

C_L = 50 pF, Input t_r, t_f = 6 ns

PARAMETER		V_{CC} (V)	25℃			–40℃ to 85℃			–55℃ to 125℃			UNIT
			MIN	TYP	MAX	MIN	TYP	MAX	MIN	TYP	MAX	
HC TYPES												
t_{PLH}, t_{PHL}	Propagation delay Data to outputs	2			110			140			165	ns
		4.5		9[3]	22			28			33	
		6			19			24			28	
t_{THL}, t_{TLH}	Output enable and disable time	2			150			190			225	ns
		4.5			30			38			45	
		5		12								
		6			26			33			38	
t_{TLH}, t_{THL}	Output transition time	2			60			75			90	ns
		4.5			12			15			18	
		6			10			13			15	
C_I	Input capacitance		10		10			10			10	pF
C_O	Three-state output capacitance				20			20			20	pF
C_{PD}	Power dissipation capacitance[1] [2]	5		46[3]								pF
HCT TYPES												
t_{PHL}, t_{PLH}	Data to outputs	4.5		10[3]	25			31			38	ns
t_{TLH}, t_{THL}	Output enable and disable times	4.5			30			38			45	ns
t_{THL}, t_{TLH}	Output transition time	4.5			12			15			18	ns
C_I	Input capacitance		10		10			10			10	pF
C_{PD}	Power dissipation capacitance[1] [2]	5		40								pF

(1) C_{PD} is used to determine the dynamic power consumption, per channel.
(2) $P_D = V_{CC}{}^2 f_i (C_{PD} + C_L)$ where f_i = input frequency, f_O = output frequency, C_L = output load capacitance, V_{CC} = supply voltage.
(3) C_L = 15 pF and V_{CC} = 5 V.

6 Parameter Measurement Information

Phase relationships between waveforms were chosen arbitrarily. All input pulses are supplied by generators having the following characteristics: PRR ≤ 1 MHz, Z_O = 50 Ω, t_t < 6 ns.

For clock inputs, f_{max} is measured when the input duty cycle is 50%.

The outputs are measured one at a time with one input transition per measurement.

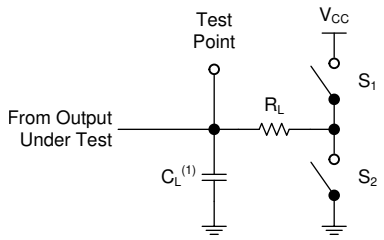

(1) C_L includes probe and test-fixture capacitance.

图 6-1. Load Circuit for 3-State Outputs

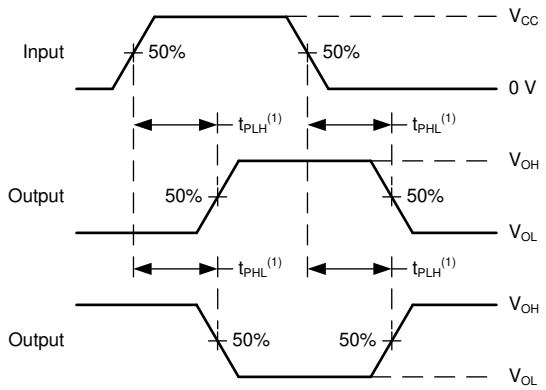

(1) The greater between t_{PLH} and t_{PHL} is the same as t_{pd}.

图 6-2. Voltage Waveforms, Propagation Delays for Standard CMOS Inputs

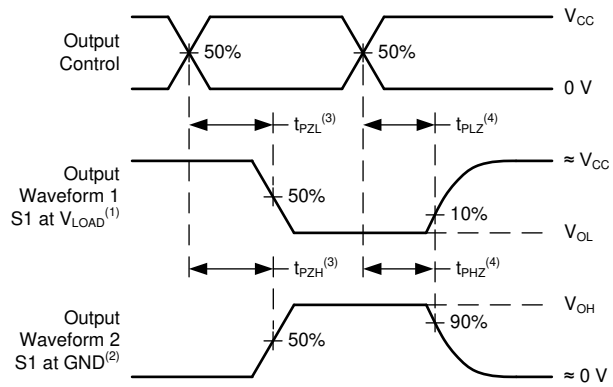

(1) S1 = CLOSED; S2 = OPEN.
(2) S1 = OPEN; s2 = CLOSED.
(3) t_{PLZ} and t_{PHZ} are the same as t_{dis}.
(4) t_{PZL} and t_{PZH} are the same as t_{en}.

图 6-3. Voltage Waveforms, Standard CMOS Inputs Propagation Delays

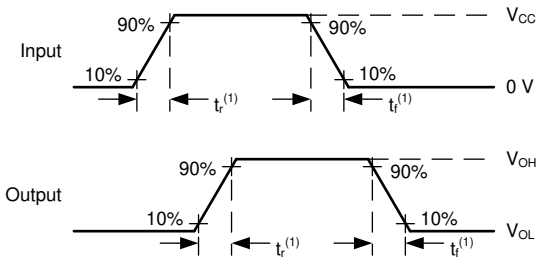

(1) The greater between t_r and t_f is the same as t_t.

图 6-4. Voltage Waveforms, Input and Output Transition Times for Standard CMOS Inputs

Copyright © 2022 Texas Instruments Incorporated

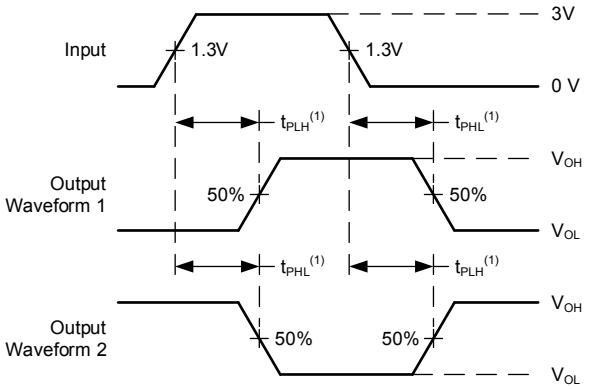

(1) The greater between t_{PLH} and t_{PHL} is the same as t_{pd}.

图 6-5. Voltage Waveforms, Propagation Delays for TTL-Compatible Inputs

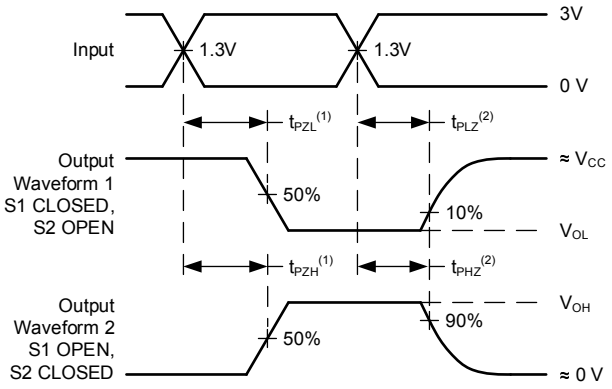

(1) t_{PLZ} and t_{PHZ} are the same as t_{dis}.

(2) t_{PZL} and t_{PZH} are the same as t_{en}.

图 6-6. Voltage Waveforms, TTL-Compatible CMOS Inputs Propagation Delays

7 Detailed Description

7.1 Overview

The ’ HC240 and ’ HCT240 are inverting three-state buffers having two active-low output enables. The CD74HC241, ’ HCT241, ’ HC244 and ’ HCT244 are non-inverting threestate buffers that differ only in that the 241 has one activehigh and one active-low output enable, and the 244 has two active-low output enables. All three types have identical pinouts.

7.2 Functional Block Diagram

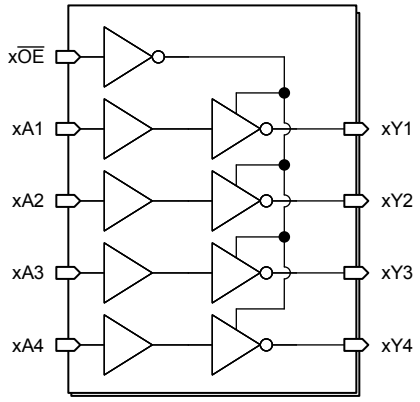

图 7-1. Functional Block Diagram '240

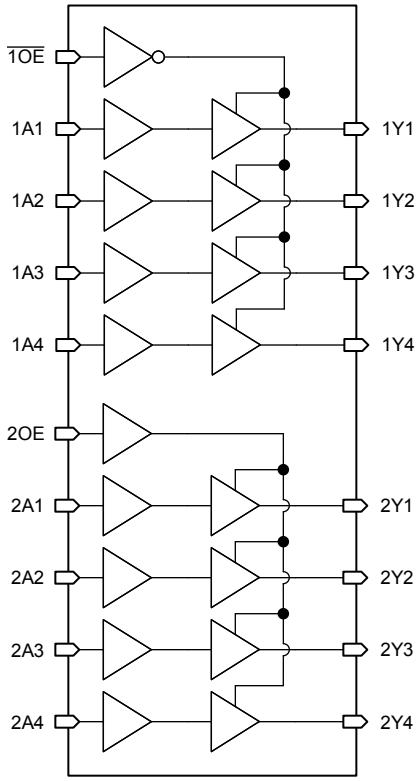

图 7-2. Functional Block Diagram '241

Copyright © 2022 Texas Instruments Incorporated

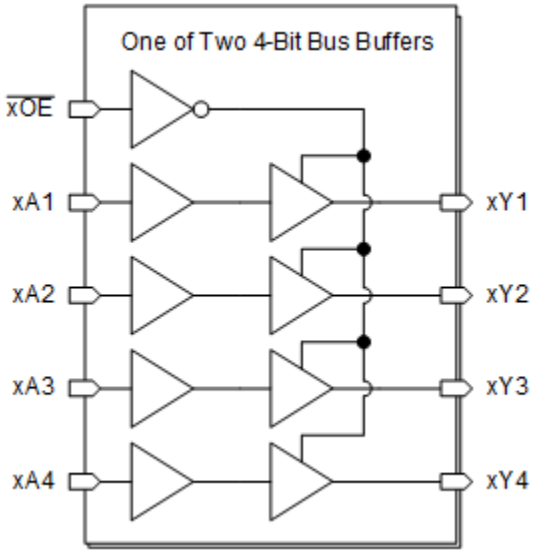

图 7-3. Functional Block Diagram '244

8 Power Supply Recommendations

The power supply can be any voltage between the minimum and maximum supply voltage rating located in the *Recommended Operating Conditions*. Each V_{CC} terminal should have a good bypass capacitor to prevent power disturbance. A 0.1-μF capacitor is recommended for this device. It is acceptable to parallel multiple bypass capacitors to reject different frequencies of noise. The 0.1-μF and 1-μF capacitors are commonly used in parallel. The bypass capacitor should be installed as close to the power terminal as possible for best results.

9 Layout

9.1 Layout Guidelines

When using multiple-input and multiple-channel logic devices, inputs must not ever be left floating. In many cases, functions or parts of functions of digital logic devices are unused; for example, when only two inputs of a triple-input AND gate are used or only 3 of the 4 buffer gates are used. Such unused input pins must not be left unconnected because the undefined voltages at the outside connections result in undefined operational states. All unused inputs of digital logic devices must be connected to a logic high or logic low voltage, as defined by the input voltage specifications, to prevent them from floating. The logic level that must be applied to any particular unused input depends on the function of the device. Generally, the inputs are tied to GND or V_{CC}, whichever makes more sense for the logic function or is more convenient.

Copyright © 2022 Texas Instruments Incorporated

10 Device and Documentation Support

TI offers an extensive line of development tools. Tools and software to evaluate the performance of the device, generate code, and develop solutions are listed below.

10.1 接收文档更新通知

要接收文档更新通知，请导航至 ti.com 上的器件产品文件夹。点击*订阅更新* 进行注册，即可每周接收产品信息更改摘要。有关更改的详细信息，请查看任何已修订文档中包含的修订历史记录。

10.2 支持资源

TI E2E™ 支持论坛是工程师的重要参考资料，可直接从专家获得快速、经过验证的解答和设计帮助。搜索现有解答或提出自己的问题可获得所需的快速设计帮助。

链接的内容由各个贡献者“按原样”提供。这些内容并不构成 TI 技术规范，并且不一定反映 TI 的观点；请参阅 TI 的《使用条款》。

10.3 Trademarks

TI E2E™ is a trademark of Texas Instruments.
所有商标均为其各自所有者的财产。

10.4 Electrostatic Discharge Caution

This integrated circuit can be damaged by ESD. Texas Instruments recommends that all integrated circuits be handled with appropriate precautions. Failure to observe proper handling and installation procedures can cause damage.

ESD damage can range from subtle performance degradation to complete device failure. Precision integrated circuits may be more susceptible to damage because very small parametric changes could cause the device not to meet its published specifications.

10.5 术语表

TI 术语表	本术语表列出并解释了术语、首字母缩略词和定义。

11 Mechanical, Packaging, and Orderable Information

The following pages include mechanical, packaging, and orderable information. This information is the most current data available for the designated devices. This data is subject to change without notice and revision of this document. For browser-based versions of this data sheet, refer to the left-hand navigation.

PACKAGING INFORMATION

Orderable part number	Status (1)	Material type (2)	Package | Pins	Package qty | Carrier	RoHS (3)	Lead finish/ Ball material (4)	MSL rating/ Peak reflow (5)	Op temp (°C)	Part marking (6)
CD54HC240F3A	Active	Production	CDIP (J) | 20	20 | TUBE	No	SNPB	N/A for Pkg Type	-55 to 125	8407401RA CD54HC240F3A
CD54HC240F3A.A	Active	Production	CDIP (J) | 20	20 | TUBE	No	SNPB	N/A for Pkg Type	-55 to 125	8407401RA CD54HC240F3A
CD54HC244F	NRND	Production	CDIP (J) | 20	20 | TUBE	No	SNPB	N/A for Pkg Type	-55 to 125	CD54HC244F
CD54HC244F.A	NRND	Production	CDIP (J) | 20	20 | TUBE	No	SNPB	N/A for Pkg Type	-55 to 125	CD54HC244F
CD54HC244F3A	Active	Production	CDIP (J) | 20	20 | TUBE	No	SNPB	N/A for Pkg Type	-55 to 125	8409601RA CD54HC244F3A
CD54HC244F3A.A	Active	Production	CDIP (J) | 20	20 | TUBE	No	SNPB	N/A for Pkg Type	-55 to 125	8409601RA CD54HC244F3A
CD54HCT240F3A	Active	Production	CDIP (J) | 20	20 | TUBE	No	SNPB	N/A for Pkg Type	-55 to 125	8550501RA CD54HCT240F3A
CD54HCT240F3A.A	Active	Production	CDIP (J) | 20	20 | TUBE	No	SNPB	N/A for Pkg Type	-55 to 125	8550501RA CD54HCT240F3A
CD54HCT241F3A	Active	Production	CDIP (J) | 20	20 | TUBE	No	SNPB	N/A for Pkg Type	-55 to 125	CD54HCT241F3A
CD54HCT241F3A.A	Active	Production	CDIP (J) | 20	20 | TUBE	No	SNPB	N/A for Pkg Type	-55 to 125	CD54HCT241F3A
CD54HCT244F	Active	Production	CDIP (J) | 20	20 | TUBE	No	SNPB	N/A for Pkg Type	-55 to 125	CD54HCT244F
CD54HCT244F.A	Active	Production	CDIP (J) | 20	20 | TUBE	No	SNPB	N/A for Pkg Type	-55 to 125	CD54HCT244F
CD54HCT244F3A	Active	Production	CDIP (J) | 20	20 | TUBE	No	SNPB	N/A for Pkg Type	-55 to 125	8513001RA CD54HCT244F3A
CD54HCT244F3A.A	Active	Production	CDIP (J) | 20	20 | TUBE	No	SNPB	N/A for Pkg Type	-55 to 125	8513001RA CD54HCT244F3A
CD74HC240E	Active	Production	PDIP (N) | 20	20 | TUBE	Yes	NIPDAU	N/A for Pkg Type	-55 to 125	CD74HC240E
CD74HC240E.A	Active	Production	PDIP (N) | 20	20 | TUBE	Yes	NIPDAU	N/A for Pkg Type	-55 to 125	CD74HC240E
CD74HC240M	Obsolete	Production	SOIC (DW) | 20	-	-	Call TI	Call TI	-55 to 125	HC240M
CD74HC240M96	Active	Production	SOIC (DW) | 20	2000 | LARGE T&R	Yes	NIPDAU	Level-1-260C-UNLIM	-55 to 125	HC240M
CD74HC240M96.A	Active	Production	SOIC (DW) | 20	2000 | LARGE T&R	Yes	NIPDAU	Level-1-260C-UNLIM	-55 to 125	HC240M
CD74HC241E	Last Time Buy	Production	PDIP (N) | 20	20 | TUBE	Yes	NIPDAU	N/A for Pkg Type	-55 to 125	CD74HC241E
CD74HC241E.A	Last Time Buy	Production	PDIP (N) | 20	20 | TUBE	Yes	NIPDAU	N/A for Pkg Type	-55 to 125	CD74HC241E
CD74HC241M	Obsolete	Production	SOIC (DW) | 20	-	-	Call TI	Call TI	-55 to 125	HC241M

Orderable part number	Status (1)	Material type (2)	Package | Pins	Package qty | Carrier	RoHS (3)	Lead finish/ Ball material (4)	MSL rating/ Peak reflow (5)	Op temp (°C)	Part marking (6)
CD74HC241M96	Active	Production	SOIC (DW) | 20	2000 | LARGE T&R	Yes	NIPDAU	Level-1-260C-UNLIM	-55 to 125	HC241M
CD74HC241M96.A	Active	Production	SOIC (DW) | 20	2000 | LARGE T&R	Yes	NIPDAU	Level-1-260C-UNLIM	-55 to 125	HC241M
CD74HC244E	Active	Production	PDIP (N) | 20	20 | TUBE	Yes	NIPDAU	N/A for Pkg Type	-55 to 125	CD74HC244E
CD74HC244E.A	Active	Production	PDIP (N) | 20	20 | TUBE	Yes	NIPDAU	N/A for Pkg Type	-55 to 125	CD74HC244E
CD74HC244EE4	Active	Production	PDIP (N) | 20	20 | TUBE	Yes	NIPDAU	N/A for Pkg Type	-55 to 125	CD74HC244E
CD74HC244M	Obsolete	Production	SOIC (DW) | 20	-	-	Call TI	Call TI	-55 to 125	HC244M
CD74HC244M96	Active	Production	SOIC (DW) | 20	2000 | LARGE T&R	Yes	NIPDAU	Level-1-260C-UNLIM	-55 to 125	HC244M
CD74HC244M96.A	Active	Production	SOIC (DW) | 20	2000 | LARGE T&R	Yes	NIPDAU	Level-1-260C-UNLIM	-55 to 125	HC244M
CD74HC244M96E4	Active	Production	SOIC (DW) | 20	2000 | LARGE T&R	Yes	NIPDAU	Level-1-260C-UNLIM	-55 to 125	HC244M
CD74HC244M96G4	Active	Production	SOIC (DW) | 20	2000 | LARGE T&R	Yes	NIPDAU	Level-1-260C-UNLIM	-55 to 125	HC244M
CD74HCT240E	Active	Production	PDIP (N) | 20	20 | TUBE	Yes	NIPDAU	N/A for Pkg Type	-55 to 125	CD74HCT240E
CD74HCT240E.A	Active	Production	PDIP (N) | 20	20 | TUBE	Yes	NIPDAU	N/A for Pkg Type	-55 to 125	CD74HCT240E
CD74HCT240EE4	Active	Production	PDIP (N) | 20	20 | TUBE	Yes	NIPDAU	N/A for Pkg Type	-55 to 125	CD74HCT240E
CD74HCT240M	Obsolete	Production	SOIC (DW) | 20	-	-	Call TI	Call TI	-55 to 125	HCT240M
CD74HCT240M96	Active	Production	SOIC (DW) | 20	2000 | LARGE T&R	Yes	NIPDAU	Level-1-260C-UNLIM	-55 to 125	HCT240M
CD74HCT240M96.A	Active	Production	SOIC (DW) | 20	2000 | LARGE T&R	Yes	NIPDAU	Level-1-260C-UNLIM	-55 to 125	HCT240M
CD74HCT240PW	Obsolete	Production	TSSOP (PW) | 20	-	-	Call TI	Call TI	-55 to 125	HK240
CD74HCT240PWR	Active	Production	TSSOP (PW) | 20	2000 | LARGE T&R	Yes	NIPDAU	Level-1-260C-UNLIM	-55 to 125	HK240
CD74HCT240PWR.A	Active	Production	TSSOP (PW) | 20	2000 | LARGE T&R	Yes	NIPDAU	Level-1-260C-UNLIM	-55 to 125	HK240
CD74HCT240PWT	Obsolete	Production	TSSOP (PW) | 20	-	-	Call TI	Call TI	-55 to 125	HK240
CD74HCT241E	Active	Production	PDIP (N) | 20	20 | TUBE	Yes	NIPDAU	N/A for Pkg Type	-55 to 125	CD74HCT241E
CD74HCT241E.A	Active	Production	PDIP (N) | 20	20 | TUBE	Yes	NIPDAU	N/A for Pkg Type	-55 to 125	CD74HCT241E
CD74HCT241M96	Active	Production	SOIC (DW) | 20	2000 | LARGE T&R	Yes	NIPDAU	Level-1-260C-UNLIM	-55 to 125	HCT241M
CD74HCT241M96.A	Active	Production	SOIC (DW) | 20	2000 | LARGE T&R	Yes	NIPDAU	Level-1-260C-UNLIM	-55 to 125	HCT241M
CD74HCT244E	Active	Production	PDIP (N) | 20	20 | TUBE	Yes	NIPDAU	N/A for Pkg Type	-55 to 125	CD74HCT244E
CD74HCT244E.A	Active	Production	PDIP (N) | 20	20 | TUBE	Yes	NIPDAU	N/A for Pkg Type	-55 to 125	CD74HCT244E
CD74HCT244M	Obsolete	Production	SOIC (DW) | 20	-	-	Call TI	Call TI	-55 to 125	HCT244M
CD74HCT244M96	Active	Production	SOIC (DW) | 20	2000 | LARGE T&R	Yes	NIPDAU	Level-1-260C-UNLIM	-55 to 125	HCT244M
CD74HCT244M96.A	Active	Production	SOIC (DW) | 20	2000 | LARGE T&R	Yes	NIPDAU	Level-1-260C-UNLIM	-55 to 125	HCT244M

(1) **Status:** For more details on status, see our product life cycle.

(2) **Material type:** When designated, preproduction parts are prototypes/experimental devices, and are not yet approved or released for full production. Testing and final process, including without limitation quality assurance, reliability performance testing, and/or process qualification, may not yet be complete, and this item is subject to further changes or possible discontinuation. If available for ordering, purchases will be subject to an additional waiver at checkout, and are intended for early internal evaluation purposes only. These items are sold without warranties of any kind.

(3) **RoHS values:** Yes, No, RoHS Exempt. See the TI RoHS Statement for additional information and value definition.

(4) **Lead finish/Ball material:** Parts may have multiple material finish options. Finish options are separated by a vertical ruled line. Lead finish/Ball material values may wrap to two lines if the finish value exceeds the maximum column width.

(5) **MSL rating/Peak reflow:** The moisture sensitivity level ratings and peak solder (reflow) temperatures. In the event that a part has multiple moisture sensitivity ratings, only the lowest level per JEDEC standards is shown. Refer to the shipping label for the actual reflow temperature that will be used to mount the part to the printed circuit board.

(6) **Part marking:** There may be an additional marking, which relates to the logo, the lot trace code information, or the environmental category of the part.

Multiple part markings will be inside parentheses. Only one part marking contained in parentheses and separated by a "~" will appear on a part. If a line is indented then it is a continuation of the previous line and the two combined represent the entire part marking for that device.

Important Information and Disclaimer: The information provided on this page represents TI's knowledge and belief as of the date that it is provided. TI bases its knowledge and belief on information provided by third parties, and makes no representation or warranty as to the accuracy of such information. Efforts are underway to better integrate information from third parties. TI has taken and continues to take reasonable steps to provide representative and accurate information but may not have conducted destructive testing or chemical analysis on incoming materials and chemicals. TI and TI suppliers consider certain information to be proprietary, and thus CAS numbers and other limited information may not be available for release.

In no event shall TI's liability arising out of such information exceed the total purchase price of the TI part(s) at issue in this document sold by TI to Customer on an annual basis.

OTHER QUALIFIED VERSIONS OF CD54HC240, CD54HC244, CD54HCT240, CD54HCT241, CD54HCT244, CD74HC240, CD74HC244, CD74HCT240, CD74HCT241, CD74HCT244 :

- Catalog : CD74HC240, CD74HC244, CD74HCT240, CD74HCT241, CD74HCT244
- Military : CD54HC240, CD54HC244, CD54HCT240, CD54HCT241, CD54HCT244

NOTE: Qualified Version Definitions:

- Catalog - TI's standard catalog product
- Military - QML certified for Military and Defense Applications

TAPE AND REEL INFORMATION

REEL DIMENSIONS

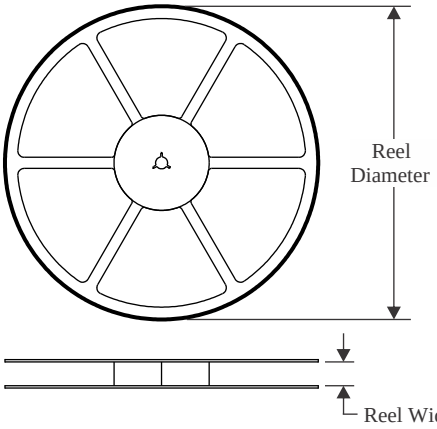

TAPE DIMENSIONS

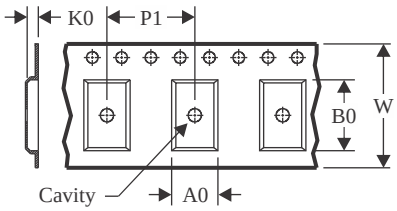

A0	Dimension designed to accommodate the component width
B0	Dimension designed to accommodate the component length
K0	Dimension designed to accommodate the component thickness
W	Overall width of the carrier tape
P1	Pitch between successive cavity centers

QUADRANT ASSIGNMENTS FOR PIN 1 ORIENTATION IN TAPE

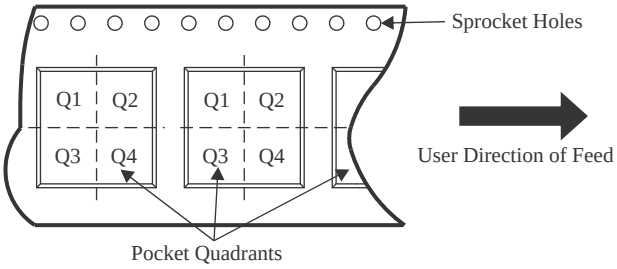

*All dimensions are nominal

Device	Package Type	Package Drawing	Pins	SPQ	Reel Diameter (mm)	Reel Width W1 (mm)	A0 (mm)	B0 (mm)	K0 (mm)	P1 (mm)	W (mm)	Pin1 Quadrant
CD74HC240M96	SOIC	DW	20	2000	330.0	24.4	10.8	13.3	2.7	12.0	24.0	Q1
CD74HC241M96	SOIC	DW	20	2000	330.0	24.4	10.8	13.3	2.7	12.0	24.0	Q1
CD74HC244M96	SOIC	DW	20	2000	330.0	24.4	10.8	13.3	2.7	12.0	24.0	Q1
CD74HCT240M96	SOIC	DW	20	2000	330.0	24.4	10.8	13.3	2.7	12.0	24.0	Q1
CD74HCT240PWR	TSSOP	PW	20	2000	330.0	16.4	6.95	7.0	1.4	8.0	16.0	Q1
CD74HCT241M96	SOIC	DW	20	2000	330.0	24.4	10.8	13.3	2.7	12.0	24.0	Q1
CD74HCT241M96	SOIC	DW	20	2000	330.0	24.4	10.9	13.3	2.7	12.0	24.0	Q1
CD74HCT244M96	SOIC	DW	20	2000	330.0	24.4	10.8	13.3	2.7	12.0	24.0	Q1
CD74HCT244M96	SOIC	DW	20	2000	330.0	24.4	10.9	13.3	2.7	12.0	24.0	Q1

TAPE AND REEL BOX DIMENSIONS

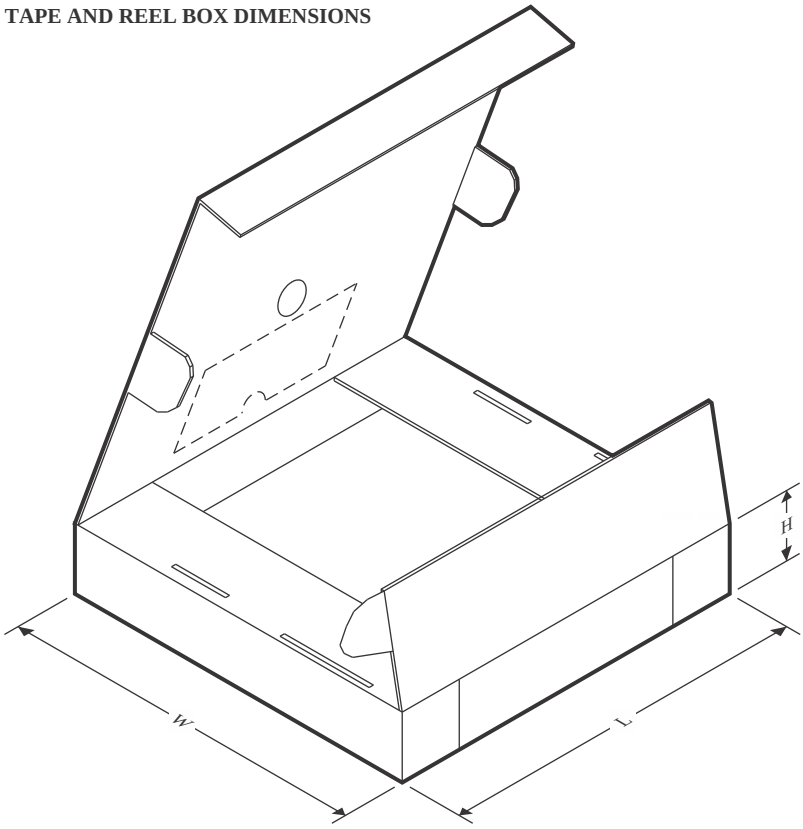

*All dimensions are nominal

Device	Package Type	Package Drawing	Pins	SPQ	Length (mm)	Width (mm)	Height (mm)
CD74HC240M96	SOIC	DW	20	2000	356.0	356.0	45.0
CD74HC241M96	SOIC	DW	20	2000	356.0	356.0	45.0
CD74HC244M96	SOIC	DW	20	2000	356.0	356.0	45.0
CD74HCT240M96	SOIC	DW	20	2000	356.0	356.0	45.0
CD74HCT240PWR	TSSOP	PW	20	2000	353.0	353.0	32.0
CD74HCT241M96	SOIC	DW	20	2000	356.0	356.0	45.0
CD74HCT241M96	SOIC	DW	20	2000	356.0	356.0	45.0
CD74HCT244M96	SOIC	DW	20	2000	356.0	356.0	45.0
CD74HCT244M96	SOIC	DW	20	2000	356.0	356.0	45.0

TUBE

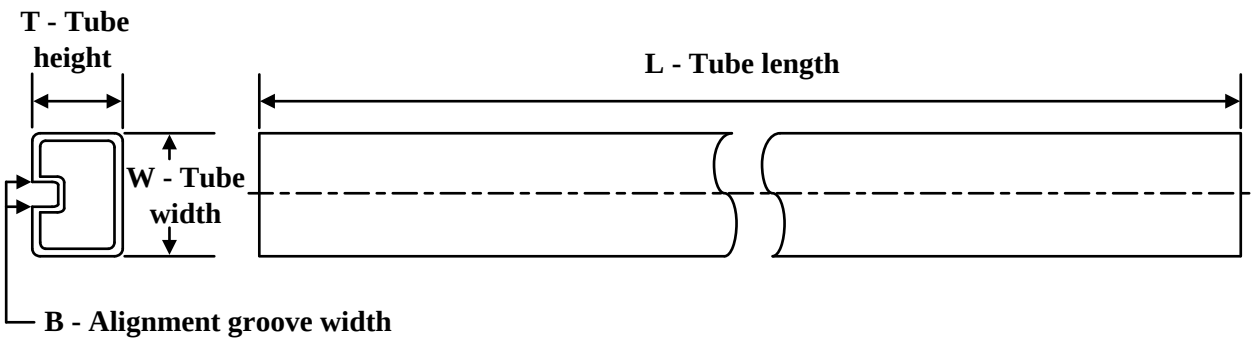

*All dimensions are nominal

Device	Package Name	Package Type	Pins	SPQ	L (mm)	W (mm)	T (µm)	B (mm)
CD74HC240E	N	PDIP	20	20	506	13.97	11230	4.32
CD74HC240E.A	N	PDIP	20	20	506	13.97	11230	4.32
CD74HC241E	N	PDIP	20	20	506	13.97	11230	4.32
CD74HC241E.A	N	PDIP	20	20	506	13.97	11230	4.32
CD74HC244E	N	PDIP	20	20	506	13.97	11230	4.32
CD74HC244E.A	N	PDIP	20	20	506	13.97	11230	4.32
CD74HC244EE4	N	PDIP	20	20	506	13.97	11230	4.32
CD74HCT240E	N	PDIP	20	20	506	13.97	11230	4.32
CD74HCT240E.A	N	PDIP	20	20	506	13.97	11230	4.32
CD74HCT240EE4	N	PDIP	20	20	506	13.97	11230	4.32
CD74HCT241E	N	PDIP	20	20	506	13.97	11230	4.32
CD74HCT241E.A	N	PDIP	20	20	506	13.97	11230	4.32
CD74HCT244E	N	PDIP	20	20	506	13.97	11230	4.32
CD74HCT244E.A	N	PDIP	20	20	506	13.97	11230	4.32

J (R–GDIP–T**) CERAMIC DUAL IN–LINE PACKAGE

14 LEADS SHOWN

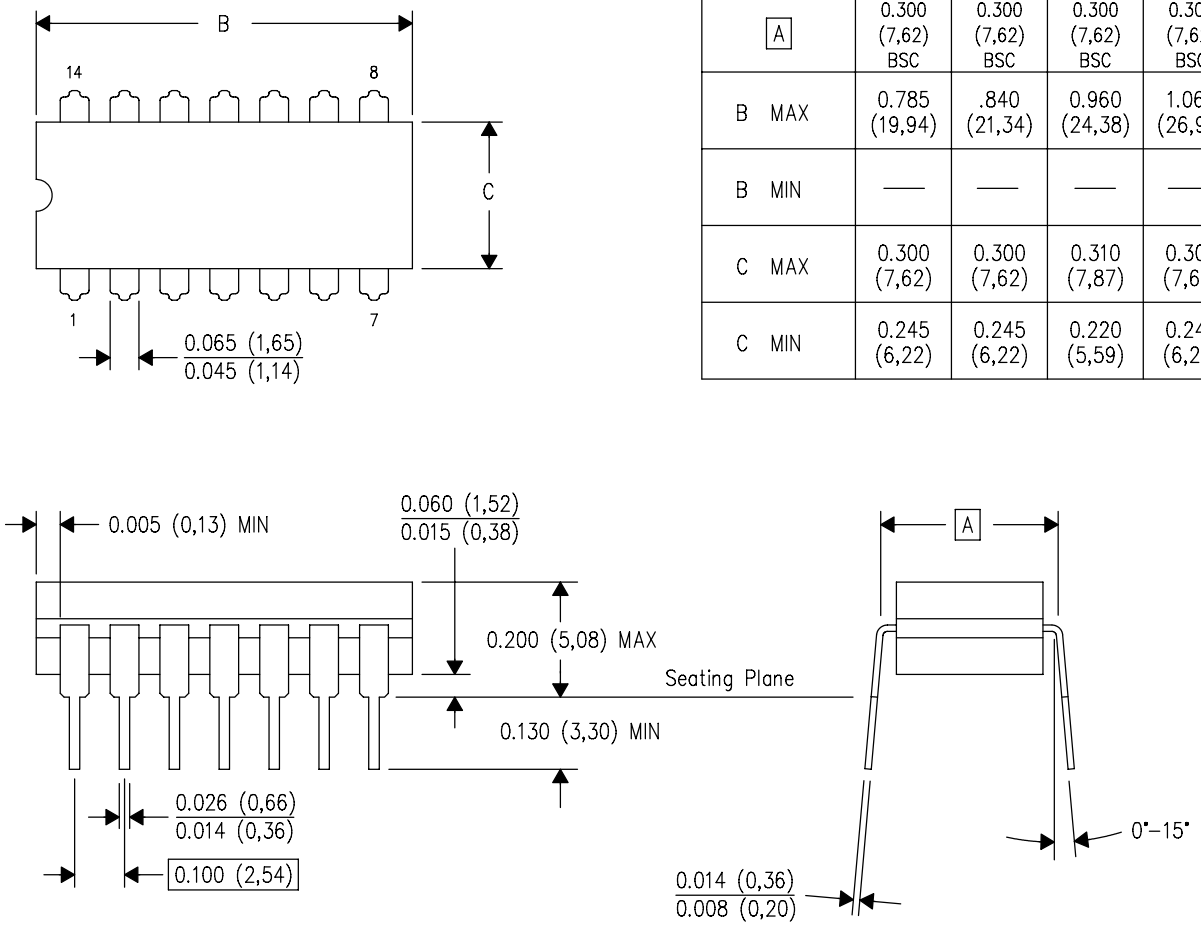

DIM \ PINS **	14	16	18	20
A	0.300 (7,62) BSC	0.300 (7,62) BSC	0.300 (7,62) BSC	0.300 (7,62) BSC
B MAX	0.785 (19,94)	.840 (21,34)	0.960 (24,38)	1.060 (26,92)
B MIN	—	—	—	—
C MAX	0.300 (7,62)	0.300 (7,62)	0.310 (7,87)	0.300 (7,62)
C MIN	0.245 (6,22)	0.245 (6,22)	0.220 (5,59)	0.245 (6,22)

4040083/F 03/03

NOTES:
- A. All linear dimensions are in inches (millimeters).
- B. This drawing is subject to change without notice.
- C. This package is hermetically sealed with a ceramic lid using glass frit.
- D. Index point is provided on cap for terminal identification only on press ceramic glass frit seal only.
- E. Falls within MIL STD 1835 GDIP1–T14, GDIP1–T16, GDIP1–T18 and GDIP1–T20.

N (R–PDIP–T**) PLASTIC DUAL–IN–LINE PACKAGE

16 PINS SHOWN

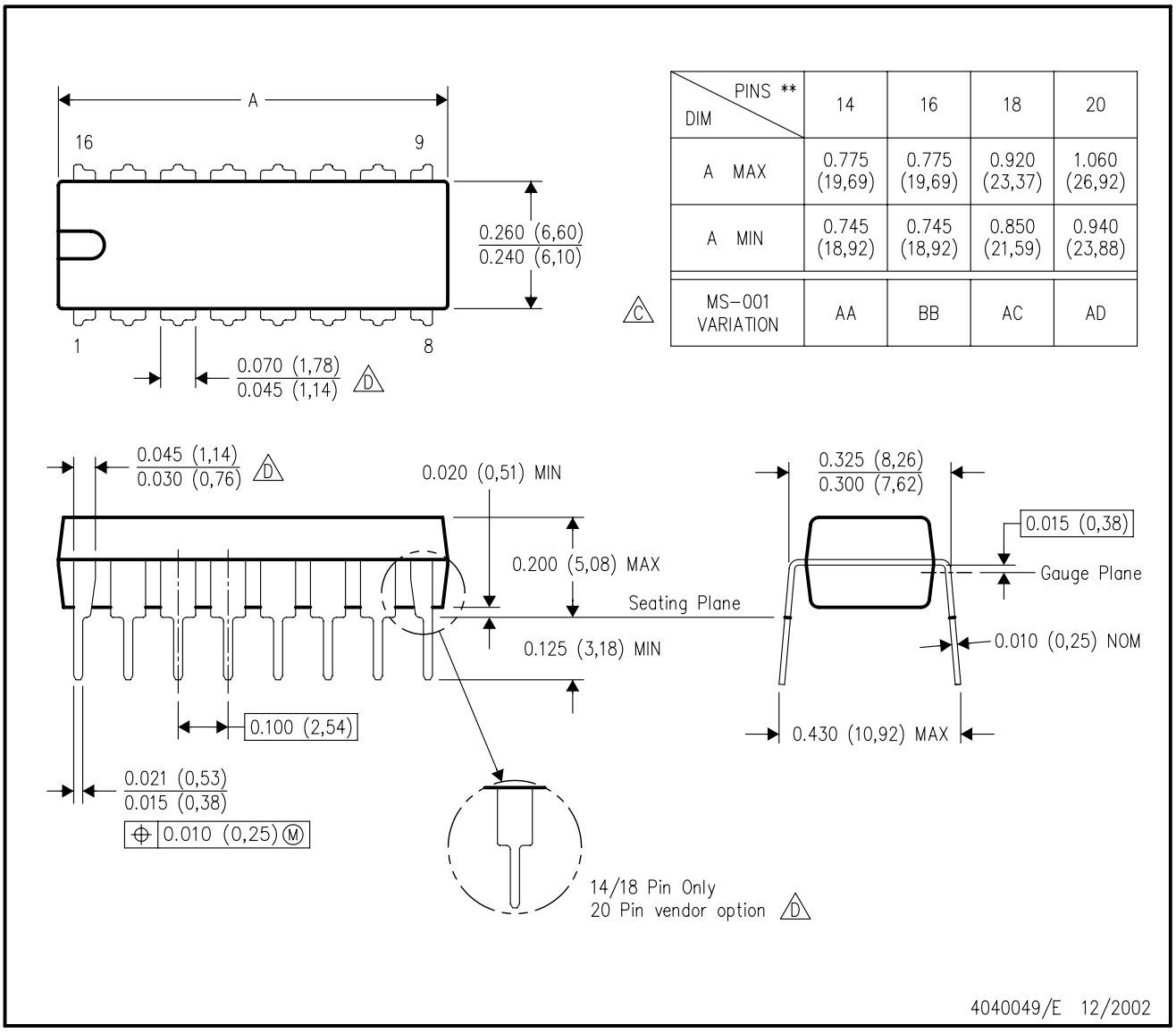

DIM \ PINS **	14	16	18	20
A MAX	0.775 (19,69)	0.775 (19,69)	0.920 (23,37)	1.060 (26,92)
A MIN	0.745 (18,92)	0.745 (18,92)	0.850 (21,59)	0.940 (23,88)
MS–001 VARIATION (C)	AA	BB	AC	AD

NOTES:
A. All linear dimensions are in inches (millimeters).
B. This drawing is subject to change without notice.
C. Falls within JEDEC MS–001, except 18 and 20 pin minimum body length (Dim A).
D. The 20 pin end lead shoulder width is a vendor option, either half or full width.

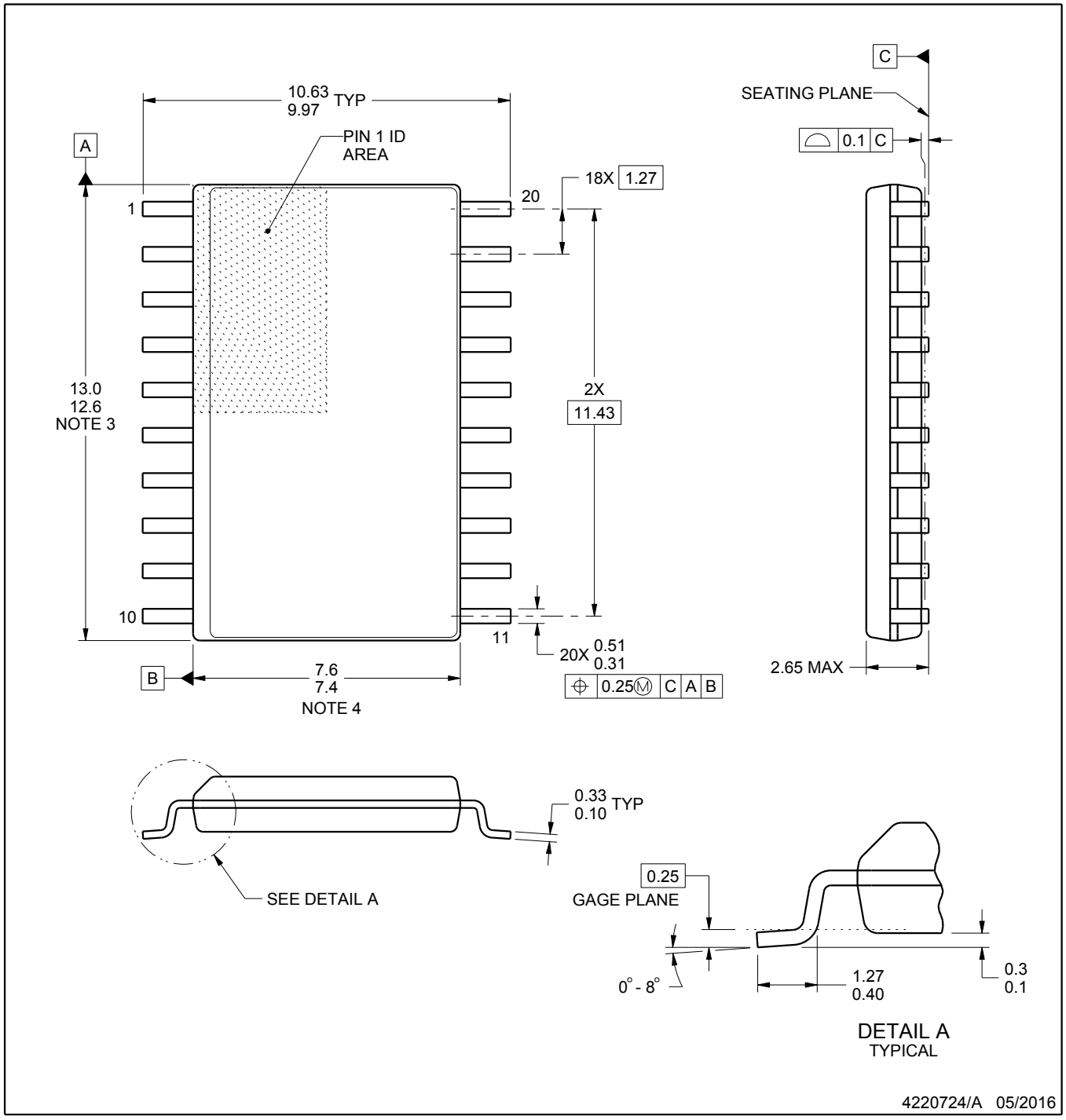

NOTES:

1. All linear dimensions are in millimeters. Dimensions in parenthesis are for reference only. Dimensioning and tolerancing per ASME Y14.5M.
2. This drawing is subject to change without notice.
3. This dimension does not include mold flash, protrusions, or gate burrs. Mold flash, protrusions, or gate burrs shall not exceed 0.15 mm per side.
4. This dimension does not include interlead flash. Interlead flash shall not exceed 0.43 mm per side.
5. Reference JEDEC registration MS-013.

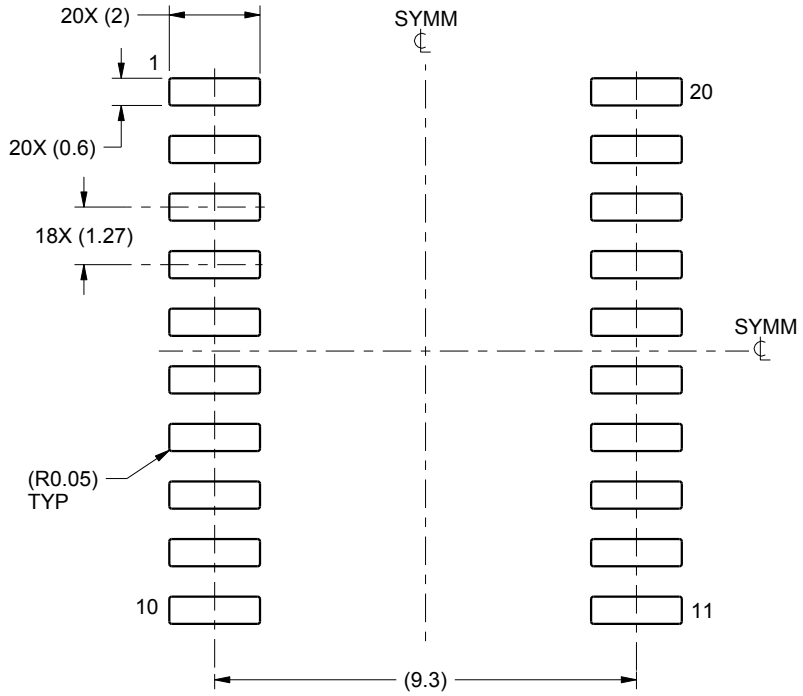

LAND PATTERN EXAMPLE
SCALE:6X

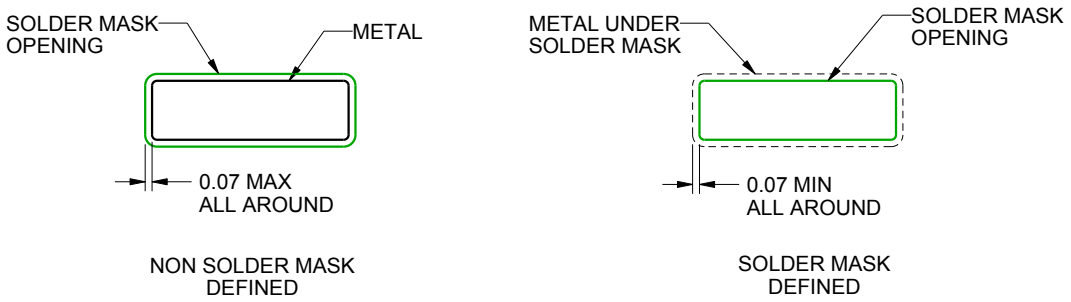

SOLDER MASK DETAILS

4220724/A 05/2016

NOTES: (continued)

6. Publication IPC-7351 may have alternate designs.
7. Solder mask tolerances between and around signal pads can vary based on board fabrication site.

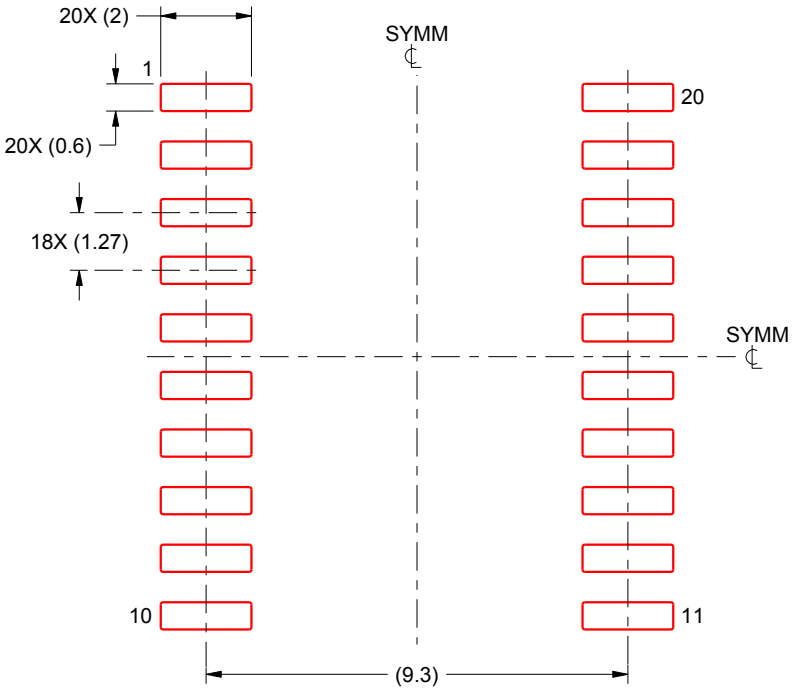

SOLDER PASTE EXAMPLE
BASED ON 0.125 mm THICK STENCIL
SCALE:6X

4220724/A 05/2016

NOTES: (continued)

8. Laser cutting apertures with trapezoidal walls and rounded corners may offer better paste release. IPC-7525 may have alternate design recommendations.
9. Board assembly site may have different recommendations for stencil design.

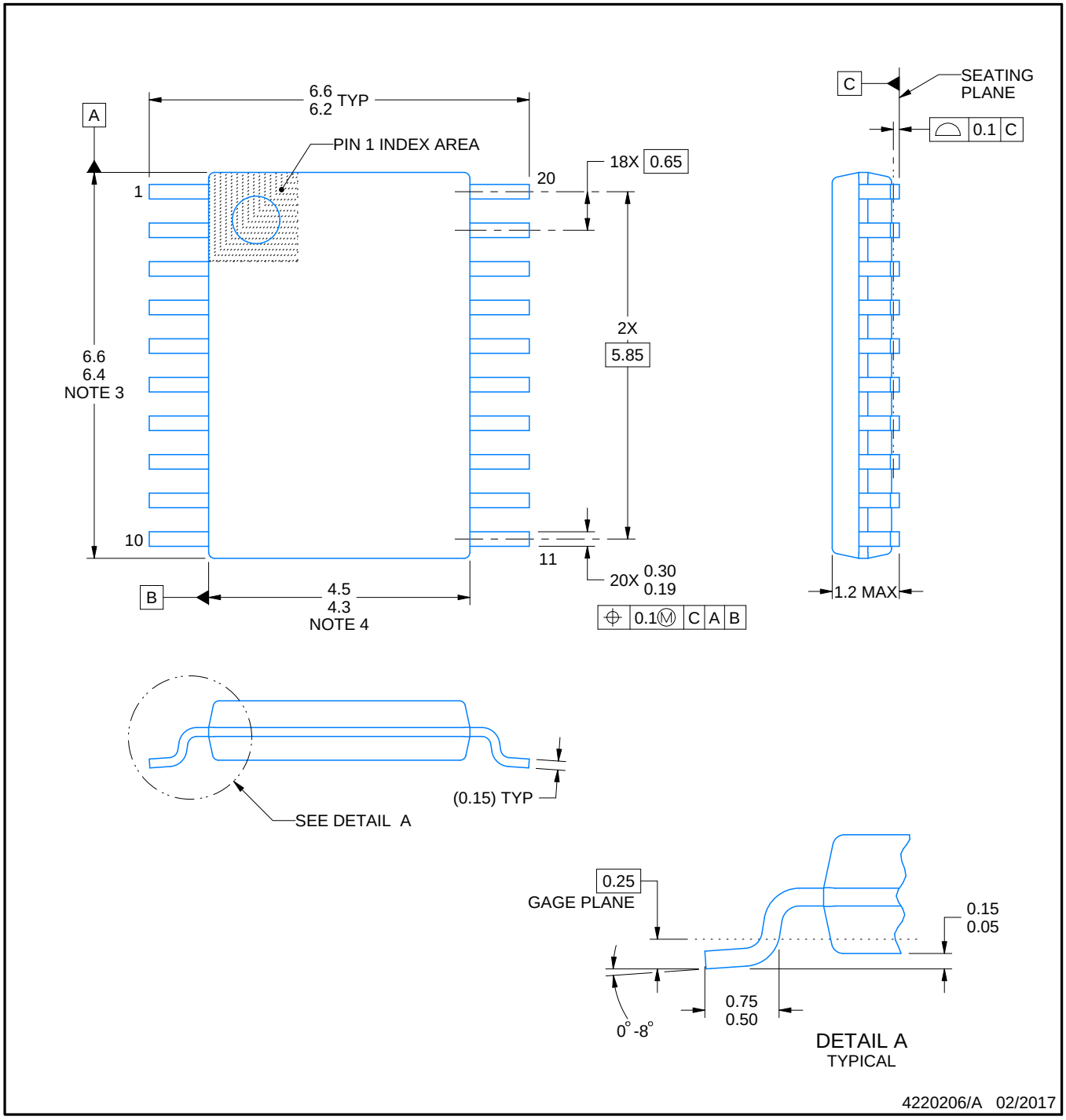

NOTES:

1. All linear dimensions are in millimeters. Any dimensions in parenthesis are for reference only. Dimensioning and tolerancing per ASME Y14.5M.
2. This drawing is subject to change without notice.
3. This dimension does not include mold flash, protrusions, or gate burrs. Mold flash, protrusions, or gate burrs shall not exceed 0.15 mm per side.
4. This dimension does not include interlead flash. Interlead flash shall not exceed 0.25 mm per side.
5. Reference JEDEC registration MO-153.

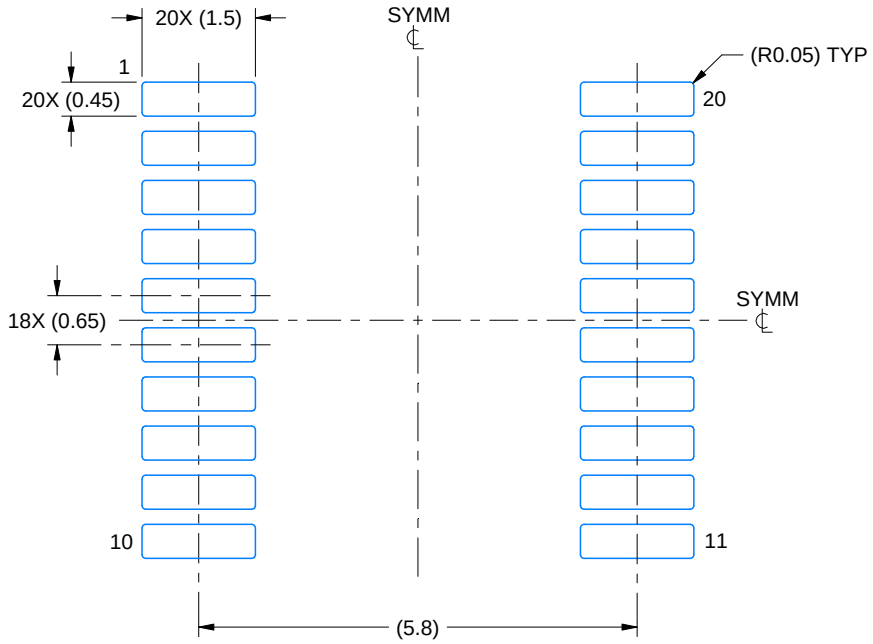

LAND PATTERN EXAMPLE
EXPOSED METAL SHOWN
SCALE: 10X

NON-SOLDER MASK DEFINED (PREFERRED)

SOLDER MASK DEFINED

SOLDER MASK DETAILS

4220206/A 02/2017

NOTES: (continued)

6. Publication IPC-7351 may have alternate designs.
7. Solder mask tolerances between and around signal pads can vary based on board fabrication site.

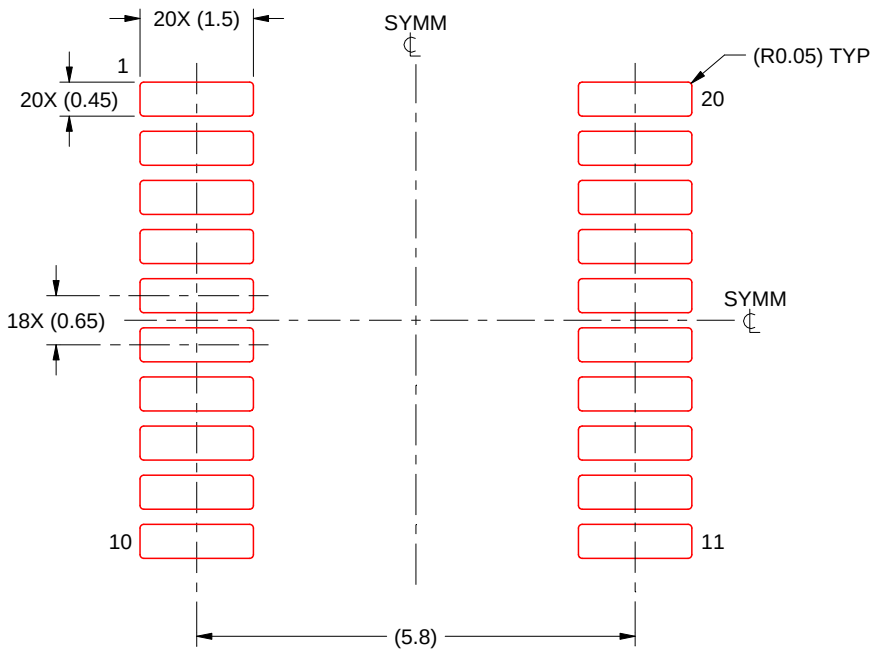

SOLDER PASTE EXAMPLE
BASED ON 0.125 mm THICK STENCIL
SCALE: 10X

4220206/A 02/2017

NOTES: (continued)

8. Laser cutting apertures with trapezoidal walls and rounded corners may offer better paste release. IPC-7525 may have alternate design recommendations.
9. Board assembly site may have different recommendations for stencil design.

重要通知和免责声明

TI“按原样”提供技术和可靠性数据（包括数据表）、设计资源（包括参考设计）、应用或其他设计建议、网络工具、安全信息和其他资源，不保证没有瑕疵且不做出任何明示或暗示的担保，包括但不限于对适销性、与某特定用途的适用性或不侵犯任何第三方知识产权的暗示担保。

这些资源可供使用 TI 产品进行设计的熟练开发人员使用。您将自行承担以下全部责任：(1) 针对您的应用选择合适的 TI 产品，(2) 设计、验证并测试您的应用，(3) 确保您的应用满足相应标准以及任何其他安全、安保法规或其他要求。

这些资源如有变更，恕不另行通知。TI 授权您仅可将这些资源用于研发本资源所述的 TI 产品的相关应用。严禁以其他方式对这些资源进行复制或展示。您无权使用任何其他 TI 知识产权或任何第三方知识产权。对于因您对这些资源的使用而对 TI 及其代表造成的任何索赔、损害、成本、损失和债务，您将全额赔偿，TI 对此概不负责。

TI 提供的产品受 TI 销售条款)、TI 通用质量指南 或 ti.com 上其他适用条款或 TI 产品随附的其他适用条款的约束。TI 提供这些资源并不会扩展或以其他方式更改 TI 针对 TI 产品发布的适用的担保或担保免责声明。 除非德州仪器 (TI) 明确将某产品指定为定制产品或客户特定产品，否则其产品均为按确定价格收入目录的标准通用器件。

TI 反对并拒绝您可能提出的任何其他或不同的条款。

版权所有 © 2026，德州仪器 (TI) 公司

最后更新日期：2025 年 10 月