高速 CMOS 逻辑六路缓冲器/线路驱动器，三态同相和反相

1 特性

- 缓冲输入
- 高电流总线驱动器输出
- 传播延迟典型值 t_{PLH}、t_{PHL} = 8ns
  V_{CC} = 5V、C_L = 15pF 且 T_A = 25℃ 时
- 扇出（在温度范围内）
  - 标准输出：10 个 LSTTL 负载
  - 总线驱动器输出：15 个 LSTTL 负载
- 宽工作温度范围：–55℃ 至 +125℃
- 平衡的传播延迟及转换时间
- 与 LSTTL 逻辑 IC 相比，可显著降低功耗
- HC 类型
  - 工作电压为 2V 至 6V
  - 高抗噪性：当 V_{CC} = 5V 时，N_{IL} = 30%，N_{IH} = V_{CC} 的 30%
- HCT 类型
  - 工作电压为 4.5V 至 5.5V
  - 直接 LSTTL 输入逻辑兼容性，V_{IL} = 0.8V（最大值），V_{IH} = 2V（最小值）
  - CMOS 输入兼容性，当电压为 V_{OL}、V_{OH} 时，I_I ≤ 1μA

器件信息

器件型号	封装[(1)]	封装尺寸（标称值）
CD54HC365	J（CerDIP、16）	19.56mm × 6.92mm
CD54HC366	J（CerDIP、16）	19.56mm × 6.92mm
CD54HCT365	J（CerDIP、16）	19.56mm × 6.92mm
CD74HC365	N（PDIP、16）	19.30mm × 6.35mm
	D (SOIC, 16)	9.90mm × 3.90mm
	D (SOIC, 16)	9.90mm × 3.90mm
	D (SOIC, 16)	9.90mm × 3.90mm
CD74HC366	N（PDIP、16）	19.30mm × 6.35mm
	D (SOIC, 16)	9.90mm × 3.90mm
	D (SOIC, 16)	9.90mm × 3.90mm
CD74HCT365	N（PDIP、16）	19.30mm × 6.35mm
	D (SOIC, 16)	9.90mm × 3.90mm
	D (SOIC, 16)	9.90mm × 3.90mm
	D (SOIC, 16)	9.90mm × 3.90mm

(1) 如需了解所有可用封装，请参阅数据表末尾的可订购产品附录。

2 说明

HC365、HCT365 和 HC366 硅栅 CMOS 三态缓冲器是通用型高速同相和反相缓冲器。

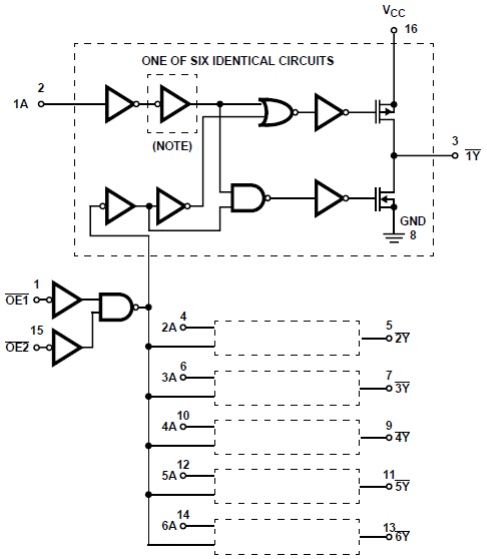

HC/HCT365 和 HC366 的逻辑图（HC/HCT365 的输出是所示输出的补充，即 1Y、2Y 等）

A. HC/HCT 365 中不包含逆变器。

本文档旨在为方便起见，提供有关 TI 产品中文版本的信息，以确认产品的概要。有关适用的官方英文版本的最新信息，请访问 www.ti.com，其内容始终优先。TI 不保证翻译的准确性和有效性。在实际设计之前，请务必参考最新版本的英文版本。

Table of Contents

1 特性.....1
2 说明.....1
3 Revision History.....2
4 Pin Configuration and Functions.....3
5 Specifications.....4
5.1 Absolute Maximum Ratings[1].....4
5.2 Operating Conditions.....4
5.3 Thermal Information.....4
5.4 Electrical Characteristics.....5
5.5 HCT Input Loading Table.....6
5.6 Switching Characteristics.....6
6 Parameter Measurement Information.....7
7 Detailed Description.....8
7.1 Overview.....8
7.2 Functional Block Diagram.....8
7.3 Device Functional Modes.....8
8 Power Supply Recommendations.....9
9 Layout.....9
9.1 Layout Guidelines.....9
10 Device and Documentation Support.....10
10.1 接收文档更新通知.....10
10.2 支持资源.....10
10.3 Trademarks.....10
10.4 Electrostatic Discharge Caution.....10
10.5 术语表.....10
11 Mechanical, Packaging, and Orderable Information.....10

3 Revision History

注：以前版本的页码可能与当前版本的页码不同

Changes from Revision C (October 2003) to Revision D (July 2022)	Page
• 更新了整个文档中的编号、格式、表格、图和交叉参考，以反映现代数据表标准	1

Copyright © 2022 Texas Instruments Incorporated

4 Pin Configuration and Functions

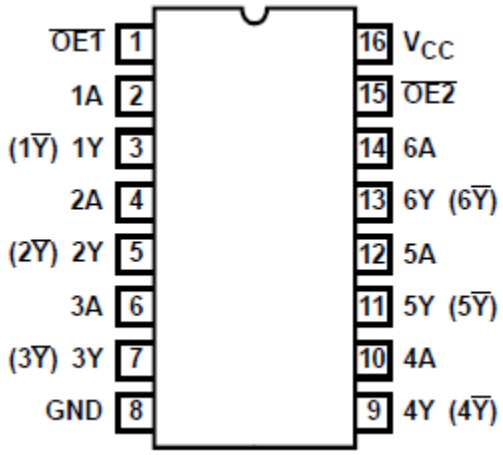

图 4-1. CD54HC365, CD54HCT365, CD54HC366 (CERDIP) CD74HC365, CD74HCT365, CD74HC366 (PDIP, SOIC) Top View

表 4-1. Pin Functions

PIN		TYPE(1)	DESCRIPTION
NO.	NAME		
1	$\overline{OE1}$	I	Output Enable 1, Active Low
2	1A	I	1A Input
3	1Y	O	1Y Output
4	2A	I	2A Input
5	2Y	O	2Y Output
6	3A	I	3A Input
7	3Y	O	3Y Output
8	GND	—	Ground Pin
9	4Y	O	4Y Output
10	4A	I	4A Input
11	5Y	O	5Y Output
12	5A	I	5A Input
13	6Y	O	6Y Output
14	6A	I	6A Input
15	$\overline{OE2}$	I	Output Enable 2, Active Low
16	V_{CC}	—	Power Pin

(1) Signal Types: I = Input, O = Output, I/O = Input or Output.

Copyright © 2022 Texas Instruments Incorporated

5 Specifications

5.1 Absolute Maximum Ratings[1]

			MIN	MAX	UNIT
V_{CC}	DC supply voltage		-0.5	7	V
I_{IK}	DC input diode current	For V_I < -0.5 V or V_I > V_{CC} + 0.5 V		±20	mA
I_{OK}	DC output diode current	For V_O < -0.5 V or V_O > V_{CC} + 0.5		±20	mA
I_O	DC drain current, per output	For -0.5 V < V_O < V_{CC} + 0.5 V		±35	mA
I_O	DC output source or sink current per output pin	For V_O > -0.5 V or V_O < V_{CC} + 0.5 V		±25	mA
I_{CC}	DC V_{CC} or ground current			±50	mA
T_J	Maximum junction temperature			150	℃
T_{stg}	Maximum storage temperature range		-65	150	℃
	Maximum lead temperature (soldering 10s)SOIC - lead tips only			300	℃

(1) Stresses beyond those listed under *absolute maximum ratings* may cause permanent damage to the device. These are stress ratings only and functional operation of the device at these or any other conditions beyond those indicated under *recommended operating conditions* is not implied. Exposure to absolute-maximum-rated conditions for extended periods may affect device reliability.

5.2 Operating Conditions

			MIN	MAX	UNIT
V_{CC}	Supply voltage range	HC Types	2	6	V
		HCT Types	4.5	5.5	V
V_I, V_O	DC input or output voltage		0	V_{CC}	V
	Input rise and fall time	2 V		1000	ns
		4.5 V		500	
		6 V		400	
T_A	Temperature range		-55	125	℃

5.3 Thermal Information

THERMAL METRIC		N (PDIP) 16 PINS	D (SOIC) 16 PINS	UNIT
$R_{\theta JA}$	Junction-to-ambient thermal resistance[1]	67	73	°C/W

(1) The package thermal impedance is calculated in accordance with JESD 51 - 7

Copyright © 2022 Texas Instruments Incorporated

5.4 Electrical Characteristics

PARAMETER		TEST CONDITIONS		V_{CC} (V)	25℃			–40℃ to 85℃		–55℃ to 125℃		UNIT
		V_I (V)	I_O (mA)		MIN	TYP	MAX	MIN	MAX	MIN	MAX	
HC TYPES												
V_{IH}	High level input voltage			2	1.5			1.5		1.5		V
				4.5	3.15			3.15		3.15		
				6	4.2			4.2		4.2		
V_{IL}	Low level input voltage			2			0.5		0.5		0.5	V
				4.5			1.35		1.35		1.35	
				6			1.8		1.8		1.8	
V_{OH}	High level output voltage CMOS loads	V_{IH} or V_{IL}	-0.02	2	1.9			1.9		1.9		V
			-0.02	4.5	4.4			4.4		4.4		
			-0.02	6	5.9			5.9		5.9		
	High level output voltage TTL loads		-6	4.5	3.98			3.84		3.7		
			-7.8	6	5.48			5.34		5.2		
V_{OL}	Low level output voltage CMOS loads	V_{IH} or V_{IL}	0.02	2			0.1		0.1		0.1	V
			0.02	4.5			0.1		0.1		0.1	
			0.02	6			0.1		0.1		0.1	
	Low level output voltage TTL loads	V_{IH} or V_{IL}	6	4.5			0.26		0.33		0.4	
			7.8	6			0.26		0.33		0.4	
I_I	Input leakage current	V_{CC} or GND		6			±0.1		±1		±1	µA
I_{CC}	Quiescent device current	V_{CC} or GND	0	6			8		80		160	µA
I_{OZ}	Three-state leakage current	V_{IH} or V_{IL}	V_O = V_{CC} or GND	6			±0.5		±5		±10	µA
HCT TYPES												
V_{IH}	High level input voltage			4.5 to 5.5	2			2		2		V
V_{IL}	Low level input voltage			4.5 to 5.5			0.8		0.8		0.8	V
V_{OH}	High level output voltage CMOS loads	V_{IH} or V_{IL}	-0.02	4.5	4.4			4.4		4.4		V
	High level output voltage TTL loads		-4	4.5	3.98			3.84		3.7		
V_{OL}	Low level output voltage CMOS loads	V_{IH} or V_{IL}	0.02	4.5			0.1		0.1		0.1	V
	Low level output voltage TTL loads		4	4.5			0.26		0.33		0.4	
I_I	Input leakage current	V_{CC} or GND	0	5.5			±0.1		±1		±1	µA
I_{CC}	Quiescent device current	V_{CC} or GND	0	5.5			8		80		160	µA
ΔI_{CC}	Additional supply current per input pin: 1 Unit Load(1)	V_{CC} - 2.1		4.5 to 5.5		100	360		450		490	µA
I_{OZ}	Three-state leakage current	V_{IL} or V_{IH}	V_O = V_{CC} or GND	5.5			±0.5		±5		±10	µA

(1) For dual-supply systems theoretical worst case (V_I = 2.4 V, V_{CC} = 5.5 V) specification is 1.8 mA

5.5 HCT Input Loading Table

Input	Unit Loads[1]
$\overline{OE1}$	0.6
All others	0.55

(1) Unit Load is ΔI_{CC} limit specified in 节 5.4, e.g., 360 µA max at 25℃.

5.6 Switching Characteristics

t_r, t_f = 6 ns

PARAMETER		TEST CONDITIONS	V_{CC} (V)	25℃		40℃ to 85℃	55℃ to 125℃	UNIT
				TYP	MAX	MAX	MAX	
HC TYPES								
t_{PLH}, t_{PHL}	Propagation delay, data to outputs HC/HCT 365	C_L = 50 pF	2		105	130	160	ns
			4.5		21	26	32	ns
			6		18	22	27	ns
		C_L = 15 pF	5	8				ns
t_{PLH}, t_{PHL}	Propagation delay, data to outputs HC 366	C_L = 50 pF	2		110	140	165	ns
			4.5		22	28	33	ns
			6		19	24	28	ns
		C_L = 15 pF	5	9				ns
t_{PLH}, t_{PHL}	Propagation delay time, output enable and disable to outputs	C_L = 50 pF	2		150	190	225	ns
			4.5		30	38	45	ns
			6		26	33	38	ns
		C_L = 15 pF	5	12				ns
t_{TLH}, t_{THL}	Output transition time	C_L = 50 pF	2		60	75	90	ns
			4.5		12	15	18	ns
			6		10	13	15	ns
C_I	Input capacitance				10	10	10	pF
C_O	Three-state ouput capacitance				20	20	20	pF
C_{PD}	Power dissipation capacitance[1][2]		5	40				pF
HCT TYPES								
t_{PLH}, t_{PHL}	Propagation delay, data to outputs HC/HCT 365	C_L = 50 pF	4.5		25	31	38	ns
								ns
		C_L = 15 pF	5	9				ns
								ns
t_{PLH}, t_{PHL}	Propagation delay, data to outputs HC 366	C_L = 50 pF	4.5		27	34	41	ns
		C_L = 15 pF	5	11				ns
t_{PLH}, t_{PHL}	Propagation delay time, output enable and disable to ouputs	C_L = 50 pF	4.5		35	44	53	ns
		C_L = 15 pF	5	14				ns
t_{TLH}, t_{THL}	Output transition time	C_L = 50 pF	4.5		12	15	18	ns
C_{IN}	Input capacitance				10	10	10	pF
C_O	Three-stage capacitance				20	20	20	pF
C_{PD}	Power dissipation capacitance[1][2]		5	42				pF

(1) C_{PD} is used to determine the dynamic power consumption, per buffer.
(2) $P_D = V_{CC}{}^2 f_i (C_{PD} + C_l)$ where f_i = input frequency, C_L = output load capacitance, V_{CC} = supply voltage.

Copyright © 2022 Texas Instruments Incorporated

6 Parameter Measurement Information

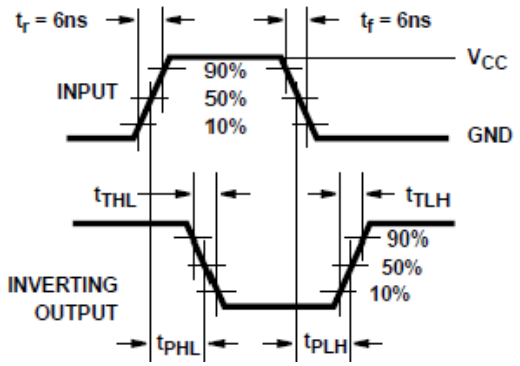

图 6-1. HC Transition Times and Propagation Delay Times, Combination Logic

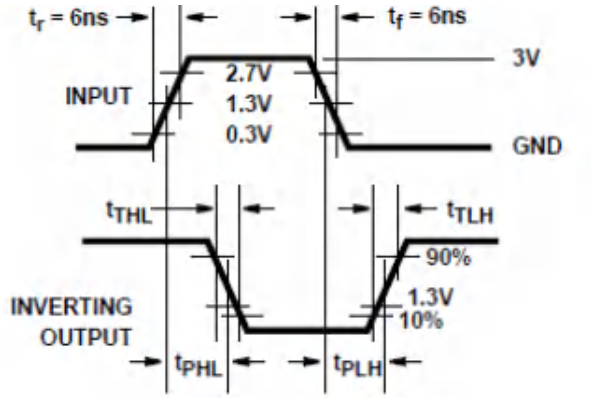

图 6-2. HCT Transition Times and Propagation Delay Times, Combination Logic

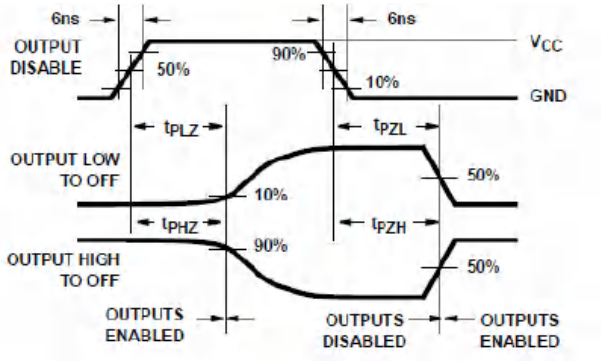

图 6-3. HC Three-State Propagation Delay Waveform

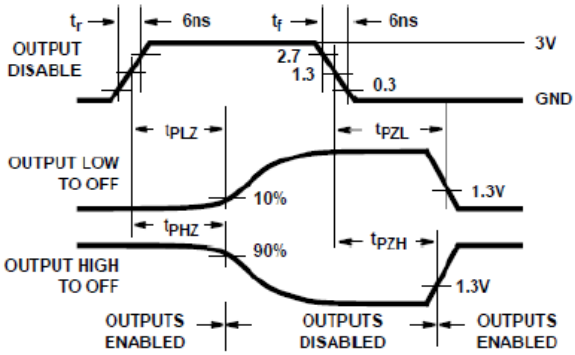

图 6-4. HCT Three-State Propagation Delay Waveform

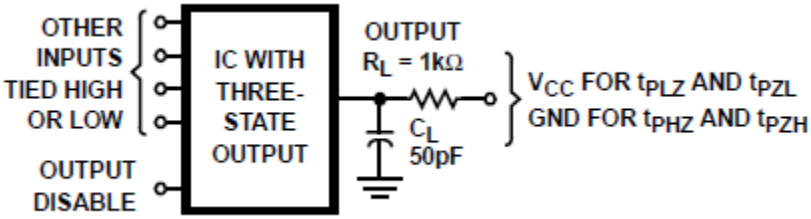

A. Open drain waveforms t_{PLZ} and t_{PZL} are the same as those for three-state shown on the left. The test circuit is output R_L = 1 kΩ to V_{CC}, C_L = 50 pF.

图 6-5. HC and HCT Three-State Propagation Delay Test Circuit

7 Detailed Description

7.1 Overview

The ’HC365, ’HCT365, and ’HC366 silicon gate CMOS three-state buffers are general purpose high-speed non-inverting and inverting buffers. They have high drive current outputs which enable high speed operation even when driving large bus capacitances. These circuits possess the low power dissipation of CMOS circuitry, yet have speeds comparable to low power Schottky TTL circuits. Both circuits are capable of driving up to 15 low power Schottky inputs.

The ’HC365 and ’HCT365 are non-inverting buffers, whereas the ’HC366 is an inverting buffer. These devices have two three-state control inputs ($\overline{OE1}$ and $\overline{OE2}$) which are NORed together to control all six gates.

The ’HCT365 logic families are speed, function and pin compatible with the standard LS logic family.

7.2 Functional Block Diagram

Functional Diagrams

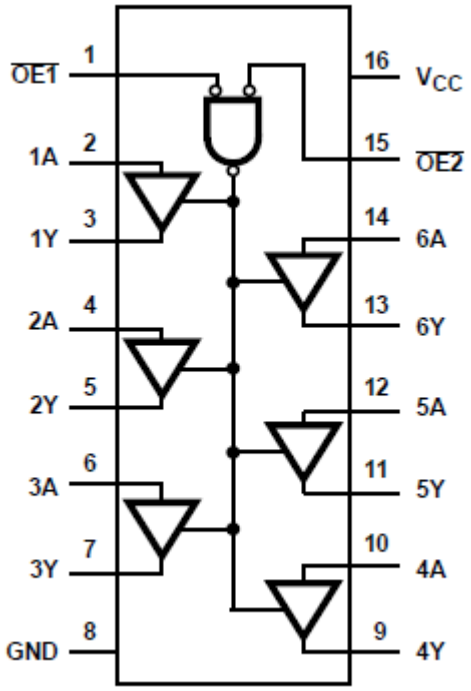

HC365, HCT365

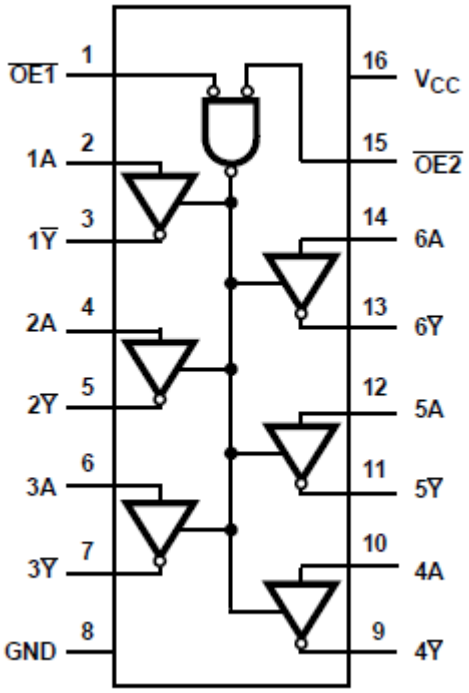

HC366

7.3 Device Functional Modes

表 7-1. Function Table

INPUTS[1]			OUTPUTS (Y)[2]	
$\overline{OE1}$	$\overline{OE2}$	A	HC/HCT 365	HCT 366
L	L	L	L	H
L	L	H	H	L
X	H	X	Z	Z
H	X	X	Z	Z

(1) H = High Voltage Level, L = Low Voltage Level, X = Don’t Care
(2) H = Driving High, L = Driving Low, Z = High Impedance State

Copyright © 2022 Texas Instruments Incorporated

8 Power Supply Recommendations

The power supply can be any voltage between the minimum and maximum supply voltage rating located in the *Recommended Operating Conditions*. Each V_{CC} terminal should have a good bypass capacitor to prevent power disturbance. A 0.1-µF capacitor is recommended for this device. It is acceptable to parallel multiple bypass caps to reject different frequencies of noise. The 0.1-µF and 1-µF capacitors are commonly used in parallel. The bypass capacitor should be installed as close to the power terminal as possible for best results.

9 Layout

9.1 Layout Guidelines

When using multiple-input and multiple-channel logic devices inputs must not ever be left floating. In many cases, functions or parts of functions of digital logic devices are unused; for example, when only two inputs of a triple-input AND gate are used or only 3 of the 4 buffer gates are used. Such unused input pins must not be left unconnected because the undefined voltages at the outside connections result in undefined operational states. All unused inputs of digital logic devices must be connected to a logic high or logic low voltage, as defined by the input voltage specifications, to prevent them from floating. The logic level that must be applied to any particular unused input depends on the function of the device. Generally, the inputs are tied to GND or V_{CC}, whichever makes more sense for the logic function or is more convenient.

Copyright © 2022 Texas Instruments Incorporated

10 Device and Documentation Support

TI offers an extensive line of development tools. Tools and software to evaluate the performance of the device, generate code, and develop solutions are listed below.

10.1 接收文档更新通知

要接收文档更新通知，请导航至 ti.com 上的器件产品文件夹。点击*订阅更新* 进行注册，即可每周接收产品信息更改摘要。有关更改的详细信息，请查看任何已修订文档中包含的修订历史记录。

10.2 支持资源

TI E2E™ 支持论坛是工程师的重要参考资料，可直接从专家获得快速、经过验证的解答和设计帮助。搜索现有解答或提出自己的问题可获得所需的快速设计帮助。

链接的内容由各个贡献者“按原样”提供。这些内容并不构成 TI 技术规范，并且不一定反映 TI 的观点；请参阅 TI 的《使用条款》。

10.3 Trademarks

TI E2E™ is a trademark of Texas Instruments.
所有商标均为其各自所有者的财产。

10.4 Electrostatic Discharge Caution

This integrated circuit can be damaged by ESD. Texas Instruments recommends that all integrated circuits be handled with appropriate precautions. Failure to observe proper handling and installation procedures can cause damage.

ESD damage can range from subtle performance degradation to complete device failure. Precision integrated circuits may be more susceptible to damage because very small parametric changes could cause the device not to meet its published specifications.

10.5 术语表

TI 术语表	本术语表列出并解释了术语、首字母缩略词和定义。

11 Mechanical, Packaging, and Orderable Information

The following pages include mechanical, packaging, and orderable information. This information is the most current data available for the designated devices. This data is subject to change without notice and revision of this document. For browser-based versions of this data sheet, refer to the left-hand navigation.

Copyright © 2022 Texas Instruments Incorporated

PACKAGING INFORMATION

Orderable part number	Status (1)	Material type (2)	Package | Pins	Package qty | Carrier	RoHS (3)	Lead finish/ Ball material (4)	MSL rating/ Peak reflow (5)	Op temp (°C)	Part marking (6)
CD54HC365F3A	Active	Production	CDIP (J) | 16	25 | TUBE	No	SNPB	N/A for Pkg Type	-55 to 125	8500101EA CD54HC365F3A
CD54HC365F3A.A	Active	Production	CDIP (J) | 16	25 | TUBE	No	SNPB	N/A for Pkg Type	-55 to 125	8500101EA CD54HC365F3A
CD54HC366F3A	Active	Production	CDIP (J) | 16	25 | TUBE	No	SNPB	N/A for Pkg Type	-55 to 125	5962-8682801EA CD54HC366F3A
CD54HC366F3A.A	Active	Production	CDIP (J) | 16	25 | TUBE	No	SNPB	N/A for Pkg Type	-55 to 125	5962-8682801EA CD54HC366F3A
CD54HCT365F3A	Active	Production	CDIP (J) | 16	25 | TUBE	No	SNPB	N/A for Pkg Type	-55 to 125	CD54HCT365F3A
CD54HCT365F3A.A	Active	Production	CDIP (J) | 16	25 | TUBE	No	SNPB	N/A for Pkg Type	-55 to 125	CD54HCT365F3A
CD74HC365E	Active	Production	PDIP (N) | 16	25 | TUBE	Yes	NIPDAU	N/A for Pkg Type	-55 to 125	CD74HC365E
CD74HC365E.A	Active	Production	PDIP (N) | 16	25 | TUBE	Yes	NIPDAU	N/A for Pkg Type	-55 to 125	CD74HC365E
CD74HC365M	Obsolete	Production	SOIC (D) | 16	-	-	Call TI	Call TI	-55 to 125	HC365M
CD74HC365M96	Last Time Buy	Production	SOIC (D) | 16	2500 | LARGE T&R	Yes	NIPDAU	Level-1-260C-UNLIM	-55 to 125	HC365M
CD74HC365M96.A	Last Time Buy	Production	SOIC (D) | 16	2500 | LARGE T&R	Yes	NIPDAU	Level-1-260C-UNLIM	-55 to 125	HC365M
CD74HC365MT	Obsolete	Production	SOIC (D) | 16	-	-	Call TI	Call TI	-55 to 125	HC365M
CD74HC366E	Active	Production	PDIP (N) | 16	25 | TUBE	Yes	NIPDAU	N/A for Pkg Type	-55 to 125	CD74HC366E
CD74HC366E.A	Active	Production	PDIP (N) | 16	25 | TUBE	Yes	NIPDAU	N/A for Pkg Type	-55 to 125	CD74HC366E
CD74HC366M	Obsolete	Production	SOIC (D) | 16	-	-	Call TI	Call TI	-55 to 125	HC366M
CD74HC366M96	Last Time Buy	Production	SOIC (D) | 16	2500 | LARGE T&R	Yes	NIPDAU	Level-1-260C-UNLIM	-55 to 125	HC366M
CD74HC366M96.A	Last Time Buy	Production	SOIC (D) | 16	2500 | LARGE T&R	Yes	NIPDAU	Level-1-260C-UNLIM	-55 to 125	HC366M
CD74HCT365E	Active	Production	PDIP (N) | 16	25 | TUBE	Yes	NIPDAU	N/A for Pkg Type	-55 to 125	CD74HCT365E
CD74HCT365E.A	Active	Production	PDIP (N) | 16	25 | TUBE	Yes	NIPDAU	N/A for Pkg Type	-55 to 125	CD74HCT365E
CD74HCT365M	Obsolete	Production	SOIC (D) | 16	-	-	Call TI	Call TI	-55 to 125	HCT365M
CD74HCT365M96	Active	Production	SOIC (D) | 16	2500 | LARGE T&R	Yes	NIPDAU | SN	Level-1-260C-UNLIM	-55 to 125	HCT365M
CD74HCT365M96.A	Active	Production	SOIC (D) | 16	2500 | LARGE T&R	Yes	NIPDAU	Level-1-260C-UNLIM	-55 to 125	HCT365M

(1) **Status:** For more details on status, see our product life cycle.

(2) **Material type:** When designated, preproduction parts are prototypes/experimental devices, and are not yet approved or released for full production. Testing and final process, including without limitation quality assurance, reliability performance testing, and/or process qualification, may not yet be complete, and this item is subject to further changes or possible discontinuation. If available for ordering, purchases will be subject to an additional waiver at checkout, and are intended for early internal evaluation purposes only. These items are sold without warranties of any kind.

(3) **RoHS values:** Yes, No, RoHS Exempt. See the TI RoHS Statement for additional information and value definition.

(4) **Lead finish/Ball material:** Parts may have multiple material finish options. Finish options are separated by a vertical ruled line. Lead finish/Ball material values may wrap to two lines if the finish value exceeds the maximum column width.

(5) **MSL rating/Peak reflow:** The moisture sensitivity level ratings and peak solder (reflow) temperatures. In the event that a part has multiple moisture sensitivity ratings, only the lowest level per JEDEC standards is shown. Refer to the shipping label for the actual reflow temperature that will be used to mount the part to the printed circuit board.

(6) **Part marking:** There may be an additional marking, which relates to the logo, the lot trace code information, or the environmental category of the part.

Multiple part markings will be inside parentheses. Only one part marking contained in parentheses and separated by a "~" will appear on a part. If a line is indented then it is a continuation of the previous line and the two combined represent the entire part marking for that device.

Important Information and Disclaimer: The information provided on this page represents TI's knowledge and belief as of the date that it is provided. TI bases its knowledge and belief on information provided by third parties, and makes no representation or warranty as to the accuracy of such information. Efforts are underway to better integrate information from third parties. TI has taken and continues to take reasonable steps to provide representative and accurate information but may not have conducted destructive testing or chemical analysis on incoming materials and chemicals. TI and TI suppliers consider certain information to be proprietary, and thus CAS numbers and other limited information may not be available for release.

In no event shall TI's liability arising out of such information exceed the total purchase price of the TI part(s) at issue in this document sold by TI to Customer on an annual basis.

OTHER QUALIFIED VERSIONS OF CD54HC365, CD54HC366, CD54HCT365, CD74HC365, CD74HC366, CD74HCT365 :

- Catalog : CD74HC365, CD74HC366, CD74HCT365
- Automotive : CD74HC366-Q1, CD74HC366-Q1
- Military : CD54HC365, CD54HC366, CD54HCT365

NOTE: Qualified Version Definitions:

- Catalog - TI's standard catalog product

- Automotive - Q100 devices qualified for high-reliability automotive applications targeting zero defects
- Military - QML certified for Military and Defense Applications

TAPE AND REEL INFORMATION

REEL DIMENSIONS

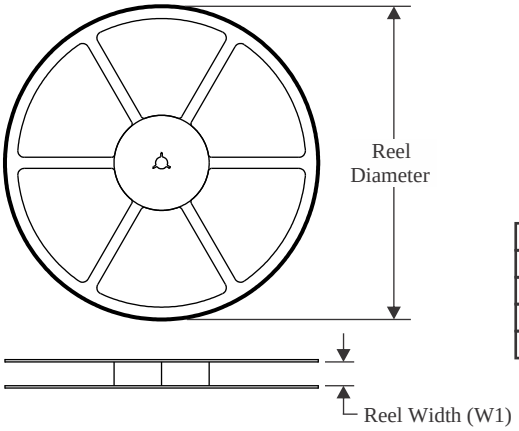

TAPE DIMENSIONS

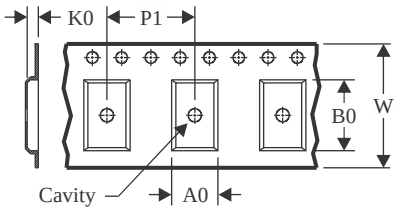

A0	Dimension designed to accommodate the component width
B0	Dimension designed to accommodate the component length
K0	Dimension designed to accommodate the component thickness
W	Overall width of the carrier tape
P1	Pitch between successive cavity centers

QUADRANT ASSIGNMENTS FOR PIN 1 ORIENTATION IN TAPE

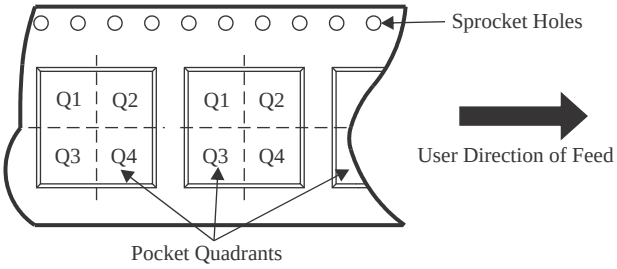

*All dimensions are nominal

Device	Package Type	Package Drawing	Pins	SPQ	Reel Diameter (mm)	Reel Width W1 (mm)	A0 (mm)	B0 (mm)	K0 (mm)	P1 (mm)	W (mm)	Pin1 Quadrant
CD74HC365M96	SOIC	D	16	2500	330.0	16.4	6.5	10.3	2.1	8.0	16.0	Q1
CD74HC366M96	SOIC	D	16	2500	330.0	16.4	6.5	10.3	2.1	8.0	16.0	Q1
CD74HCT365M96	SOIC	D	16	2500	330.0	16.4	6.5	10.3	2.1	8.0	16.0	Q1

TAPE AND REEL BOX DIMENSIONS

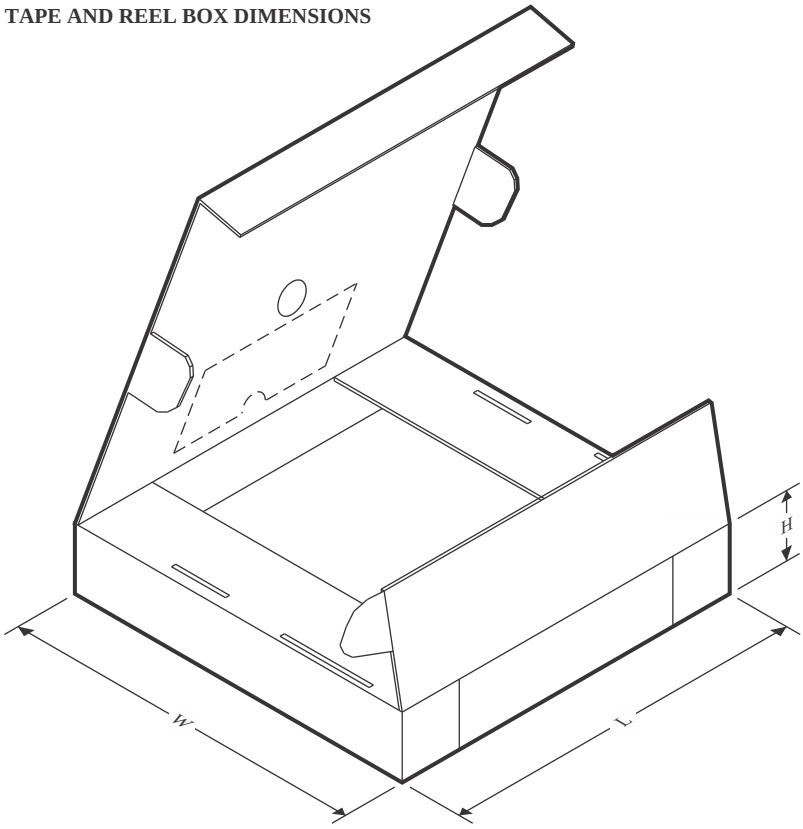

*All dimensions are nominal

Device	Package Type	Package Drawing	Pins	SPQ	Length (mm)	Width (mm)	Height (mm)
CD74HC365M96	SOIC	D	16	2500	353.0	353.0	32.0
CD74HC366M96	SOIC	D	16	2500	353.0	353.0	32.0
CD74HCT365M96	SOIC	D	16	2500	353.0	353.0	32.0

TUBE

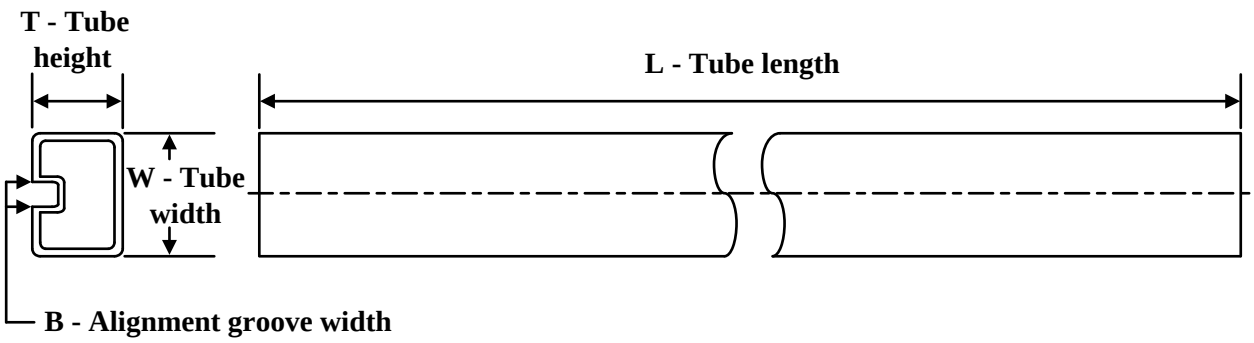

*All dimensions are nominal

Device	Package Name	Package Type	Pins	SPQ	L (mm)	W (mm)	T (µm)	B (mm)
CD74HC365E	N	PDIP	16	25	506	13.97	11230	4.32
CD74HC365E	N	PDIP	16	25	506	13.97	11230	4.32
CD74HC365E.A	N	PDIP	16	25	506	13.97	11230	4.32
CD74HC365E.A	N	PDIP	16	25	506	13.97	11230	4.32
CD74HC366E	N	PDIP	16	25	506	13.97	11230	4.32
CD74HC366E	N	PDIP	16	25	506	13.97	11230	4.32
CD74HC366E.A	N	PDIP	16	25	506	13.97	11230	4.32
CD74HC366E.A	N	PDIP	16	25	506	13.97	11230	4.32
CD74HCT365E	N	PDIP	16	25	506	13.97	11230	4.32
CD74HCT365E	N	PDIP	16	25	506	13.97	11230	4.32
CD74HCT365E.A	N	PDIP	16	25	506	13.97	11230	4.32
CD74HCT365E.A	N	PDIP	16	25	506	13.97	11230	4.32

D (R–PDSO–G16) PLASTIC SMALL OUTLINE

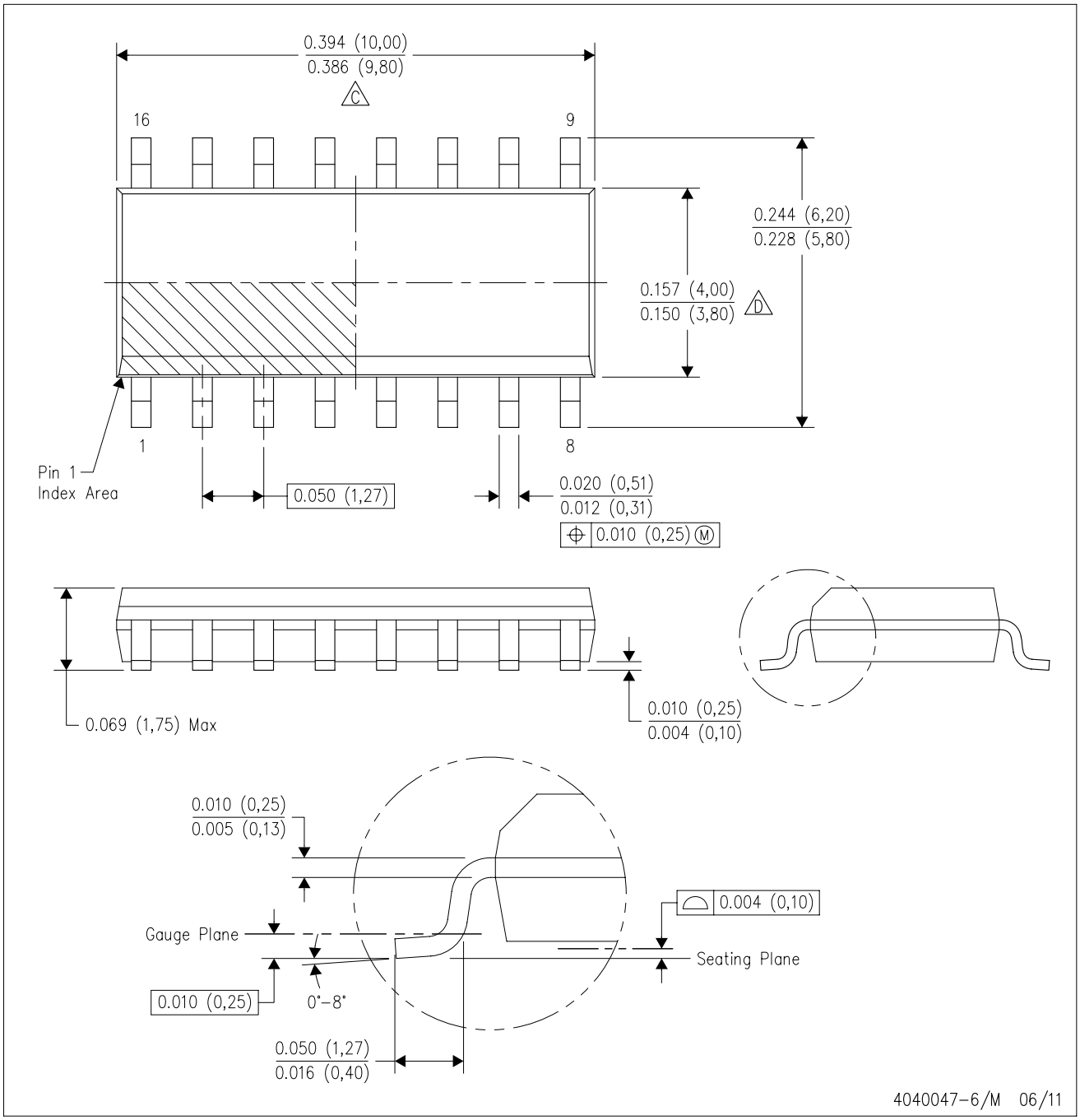

NOTES:
A. All linear dimensions are in inches (millimeters).
B. This drawing is subject to change without notice.
C. Body length does not include mold flash, protrusions, or gate burrs. Mold flash, protrusions, or gate burrs shall not exceed 0.006 (0,15) each side.
D. Body width does not include interlead flash. Interlead flash shall not exceed 0.017 (0,43) each side.
E. Reference JEDEC MS–012 variation AC.

J (R–GDIP–T**) CERAMIC DUAL IN–LINE PACKAGE

14 LEADS SHOWN

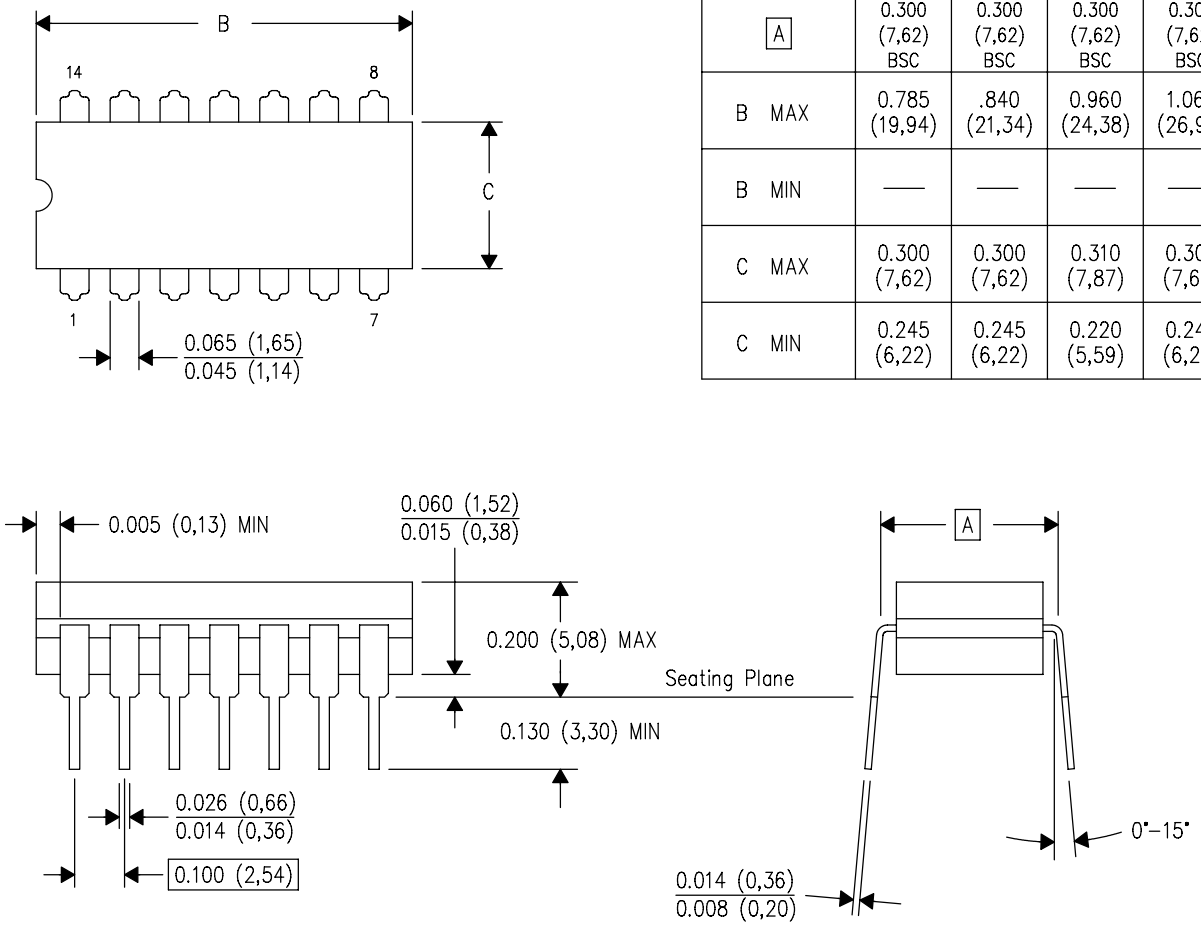

DIM \ PINS **	14	16	18	20
A	0.300 (7,62) BSC	0.300 (7,62) BSC	0.300 (7,62) BSC	0.300 (7,62) BSC
B MAX	0.785 (19,94)	.840 (21,34)	0.960 (24,38)	1.060 (26,92)
B MIN	—	—	—	—
C MAX	0.300 (7,62)	0.300 (7,62)	0.310 (7,87)	0.300 (7,62)
C MIN	0.245 (6,22)	0.245 (6,22)	0.220 (5,59)	0.245 (6,22)

4040083/F 03/03

NOTES:
- A. All linear dimensions are in inches (millimeters).
- B. This drawing is subject to change without notice.
- C. This package is hermetically sealed with a ceramic lid using glass frit.
- D. Index point is provided on cap for terminal identification only on press ceramic glass frit seal only.
- E. Falls within MIL STD 1835 GDIP1–T14, GDIP1–T16, GDIP1–T18 and GDIP1–T20.

N (R–PDIP–T**) PLASTIC DUAL–IN–LINE PACKAGE

16 PINS SHOWN

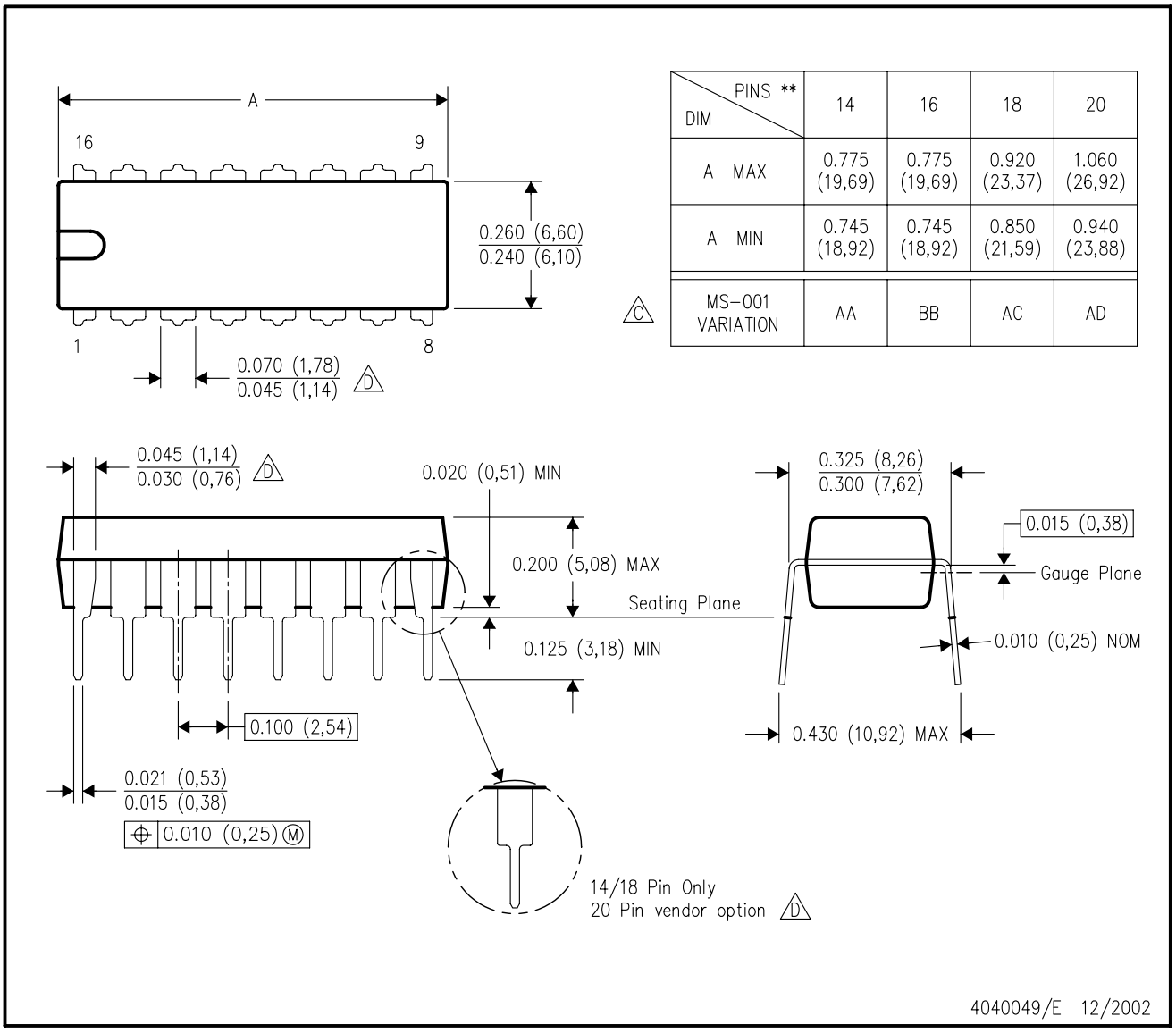

DIM \ PINS **	14	16	18	20
A MAX	0.775 (19,69)	0.775 (19,69)	0.920 (23,37)	1.060 (26,92)
A MIN	0.745 (18,92)	0.745 (18,92)	0.850 (21,59)	0.940 (23,88)
MS–001 VARIATION (C)	AA	BB	AC	AD

NOTES:
A. All linear dimensions are in inches (millimeters).
B. This drawing is subject to change without notice.
C. Falls within JEDEC MS–001, except 18 and 20 pin minimum body length (Dim A).
D. The 20 pin end lead shoulder width is a vendor option, either half or full width.

重要通知和免责声明

TI“按原样”提供技术和可靠性数据（包括数据表）、设计资源（包括参考设计）、应用或其他设计建议、网络工具、安全信息和其他资源，不保证没有瑕疵且不做出任何明示或暗示的担保，包括但不限于对适销性、与某特定用途的适用性或不侵犯任何第三方知识产权的暗示担保。

这些资源可供使用 TI 产品进行设计的熟练开发人员使用。您将自行承担以下全部责任：(1) 针对您的应用选择合适的 TI 产品，(2) 设计、验证并测试您的应用，(3) 确保您的应用满足相应标准以及任何其他安全、安保法规或其他要求。

这些资源如有变更，恕不另行通知。TI 授权您仅可将这些资源用于研发本资源所述的 TI 产品的相关应用。严禁以其他方式对这些资源进行复制或展示。您无权使用任何其他 TI 知识产权或任何第三方知识产权。对于因您对这些资源的使用而对 TI 及其代表造成的任何索赔、损害、成本、损失和债务，您将全额赔偿，TI 对此概不负责。

TI 提供的产品受 TI 销售条款)、TI 通用质量指南 或 ti.com 上其他适用条款或 TI 产品随附的其他适用条款的约束。TI 提供这些资源并不会扩展或以其他方式更改 TI 针对 TI 产品发布的适用的担保或担保免责声明。 除非德州仪器 (TI) 明确将某产品指定为定制产品或客户特定产品，否则其产品均为按确定价格收入目录的标准通用器件。

TI 反对并拒绝您可能提出的任何其他或不同的条款。

版权所有 © 2026，德州仪器 (TI) 公司

最后更新日期：2025 年 10 月