CC2650 SimpleLink™ 多标准 无线 MCU

1 器件概述

1.1 特性

- 微控制器
  - 强大的 ARM® Cortex®-M3
  - EEMBC CoreMark®评分：142
  - 高达 48MHz 的时钟速度
  - 128KB 系统内可编程闪存
  - 8KB 缓存静态 RAM (SRAM)
  - 20KB 超低泄漏 SRAM
  - 2 引脚 cJTAG 和 JTAG 调试
  - 支持无线升级 (OTA)
- 超低功耗传感器控制器
  - 可独立于系统其余部分自主运行
  - 16 位架构
  - 存储代码和数据的 2KB 超低泄漏 SRAM
- 高效代码尺寸架构，只读存储器 (ROM) 中装载驱动程序、 *Bluetooth*® 低能耗控制器、 IEEE 802.15.4 MAC、 和引导加载程序
- 封装符合 RoHS 标准
  - 4mm × 4mm RSM VQFN32 封装（10 个 GPIO）
  - 5mm × 5mm RHB VQFN32 封装（15 个 GPIO）
  - 7mm × 7mm RGZ VQFN48 封装（31 个 GPIO）
- 外设
  - 所有数字外设引脚均可连接任意 GPIO
  - 四个通用定时器模块（8 × 16 位或 4 × 32 位，均采用脉宽调制 (PWM)）
  - 12 位模数转换器 (ADC)、200MSPS、8 通道模拟多路复用器
  - 持续时间比较器
  - 超低功耗模拟比较器
  - 可编程电流源
  - UART
  - 2 个同步串行接口 (SSI)（SPI、MICROWIRE 和 TI）
  - I2C
  - I2S
  - 实时时钟 (RTC)
  - AES-128 安全模块
  - 真随机数发生器 (TRNG)
  - 10、15 或 31 个 GPIO，具体取决于所用封装选项
  - 支持八个电容感测按钮
  - 集成温度传感器
- 外部系统
  - 片上内部 DC-DC 转换器
  - 极少的外部组件
  - 无缝集成 SimpleLink™CC2590 和 CC2592 范围扩展器
  - 与采用 4mm × 4mm 和 5mm × 5mm VQFN 封装的 SimpleLink CC13xx 引脚兼容
- 低功耗
  - 宽电源电压范围
    - 正常工作电压：1.8V 至 3.8V
    - 外部稳压器模式：1.7V 至 1.95V
  - 有源模式 RX：5.9mA
  - 有源模式 TX (0dBm)：6.1mA
  - 有源模式 TX (+5dBm)：9.1mA
  - 有源模式 MCU：61µA/MHz
  - 有源模式 MCU：48.5 CoreMark/mA
  - 有源模式传感器控制器：8.2µA/MHz
  - 待机电流：1µA（RTC 运行，RAM/CPU 保持）
  - 关断电流：100nA（发生外部事件时唤醒）
- 射频 (RF) 部分
  - 2.4GHz RF 收发器，符合 *Bluetooth* 低功耗 (BLE) 4.1 规范及 IEEE 802.15.4 PHY 和 MAC
  - 出色的接收器灵敏度（BLE 对应 –97dBm，802.15.4 对应 –100dBm）、可选择性和阻断性能
  - 102dB/105dB (BLE/802.15.4) 的链路预算
  - 最高达 +5dBm 的可编程输出功率
  - 单端或差分 RF 接口
  - 适用于符合各项全球射频规范的系统
    - ETSI EN 300 328（欧洲）
    - EN 300 440 2 类（欧洲）
    - FCC CFR47 第 15 部分（美国）
    - ARIB STD-T66（日本）
- 工具和开发环境
  - 功能全面的低成本开发套件
  - 针对不同 RF 配置的多种参考设计
  - 数据包监听器 PC 软件
  - Sensor Controller Studio
  - SmartRF™Studio
  - SmartRF Flash Programmer 2
  - IAR Embedded Workbench®（用于 ARM）
  - Code Composer Studio™

An IMPORTANT NOTICE at the end of this data sheet addresses availability, warranty, changes, use in safety-critical applications, intellectual property matters and other important disclaimers. PRODUCTION DATA.

1.2 应用

- 消费类电子产品
- 移动电话附件
- 运动和健身设备
- HID 应用
- 家庭和楼宇自动化
- 照明控制
- 警报和安全
- 电子货架标签
- Proximity Tag
- 医疗
- 遥控
- 无线传感器网络

1.3 说明

CC2650 器件是一款面向 *Bluetooth* Smart、 ZigBee®和 6LoWPAN，以及 ZigBee RF4CE 远程控制 应用的无线 MCU。

此器件属于 CC26xx 系列的经济高效型超低功耗 2.4GHz RF 器件。它具有极低的有源 RF 和 MCU 电流以及低功耗模式流耗，可确保卓越的电池使用寿命，适合小型纽扣电池供电以及在能源采集型应用中 使用。

CC2650 器件含有一个 32 位 ARM Cortex-M3 处理器（与主处理器工作频率同为 48MHz），并且具有丰富的外设功能集，其中包括一个独特的超低功耗传感器控制器。此传感器控制器非常适合连接外部传感器，还适合用于在系统其余部分处于睡眠模式的情况下自主收集模拟和数字数据。因此，CC2650 器件成为 广泛的工业、消费类电子和医疗产品中各类应用的理想选择。

Bluetooth 低能耗控制器和 IEEE 802.15.4 MAC 嵌入在 ROM 中，并在 ARM Cortex-M0 处理器上单独运行。此架构可改善整体系统性能和功耗，并释放闪存以供应用。

Bluetooth Smart 和 ZigBee 协议栈可从 www.ti.com.cn 免费获取。

器件信息(1)

产品型号	封装	封装尺寸（标称值）
CC2650F128RGZ	VQFN (48)	7.00mm x 7.00mm
CC2650F128RHB	VQFN (32)	5.00mm x 5.00mm
CC2650F128RSM	VQFN (32)	4.00mm x 4.00mm

(1) 更多信息请参见 节 9，*机械封装和可订购产品信息*。

版权 © 2015, Texas Instruments Incorporated

1.4 功能框图

图 1-1显示了 CC2650 的方框图。

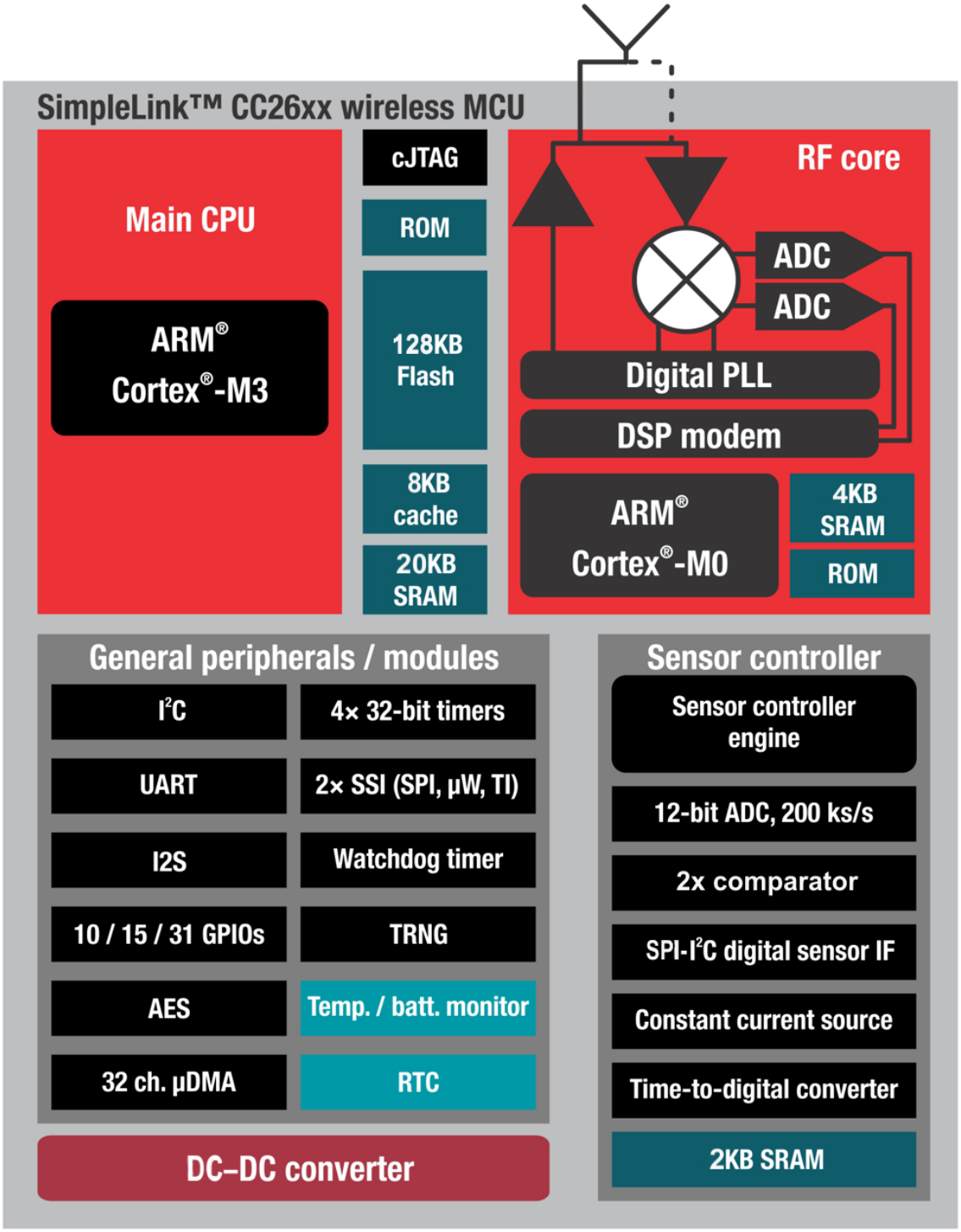

图 **1-1.** 方框图

内容

1 器件概述 1
1.1 特性 1
1.2 应用 2
1.3 说明 2
1.4 功能框图 3
2 修订历史记录 5
3 Device Comparison 6
4 Terminal Configuration and Functions 7
4.1 Pin Diagram – RGZ Package 7
4.2 Signal Descriptions – RGZ Package 7
4.3 Pin Diagram – RHB Package 9
4.4 Signal Descriptions – RHB Package 9
4.5 Pin Diagram – RSM Package 11
4.6 Signal Descriptions – RSM Package 11
5 Specifications 13
5.1 Absolute Maximum Ratings 13
5.2 ESD Ratings 13
5.3 Recommended Operating Conditions 13
5.4 Power Consumption Summary 14
5.5 General Characteristics 14
5.6 1-Mbps GFSK (*Bluetooth* Low Energy) – RX 15
5.7 1-Mbps GFSK (*Bluetooth* Low Energy) – TX 16
5.8 IEEE 802.15.4 (Offset Q-PSK DSSS, 250 kbps) – RX 16
5.9 IEEE 802.15.4 (Offset Q-PSK DSSS, 250 kbps) – TX 17
5.10 24-MHz Crystal Oscillator (XOSC_HF) 17
5.11 32.768-kHz Crystal Oscillator (XOSC_LF) 17
5.12 48-MHz RC Oscillator (RCOSC_HF) 18
5.13 32-kHz RC Oscillator (RCOSC_LF) 18
5.14 ADC Characteristics 18
5.15 Temperature Sensor 19
5.16 Battery Monitor 19
5.17 Continuous Time Comparator 19
5.18 Low-Power Clocked Comparator 20
5.19 Programmable Current Source 20
5.20 DC Characteristics 20
5.21 Thermal Characteristics 21
5.22 Timing Requirements 22
5.23 Switching Characteristics 22
5.24 Typical Characteristics 24
6 Detailed Description 29
6.1 Overview 29
6.2 Functional Block Diagram 29
6.3 Main CPU 30
6.4 RF Core 30
6.5 Sensor Controller 31
6.6 Memory 32
6.7 Debug 32
6.8 Power Management 33
6.9 Clock Systems 34
6.10 General Peripherals and Modules 34
6.11 System Architecture 35
7 Application, Implementation, and Layout 36
7.1 Application Information 36
7.2 5 × 5 External Differential (5XD) Application Circuit 38
7.3 4 × 4 External Single-ended (4XS) Application Circuit 40
8 器件和文档支持 42
8.1 器件支持 42
8.2 文档支持 44
8.3 社区资源 44
8.4 德州仪器 (TI) 低功耗射频网站 44
8.5 低功耗射频在线社区 44
8.6 德州仪器 (TI) 低功耗射频开发者网络 44
8.7 低功耗射频电子新闻简报 44
8.8 其他信息 45
8.9 商标 45
8.10 静电放电警告 45
8.11 Export Control Notice 45
8.12 Glossary 45
9 机械、封装和可订购信息 45
9.1 封装信息 45

版权 © 2015, Texas Instruments Incorporated

2 修订历史记录

注：之前版本的页码可能与当前版本有所不同。

Changes from February 21, 2015 to October 15, 2015	Page
• Removed RHB package option from CC2620	6
• Added motional inductance recommendation to the *24-MHz XOSC* table	17
• Added VOH and VOL min and max values for 4-mA and 8-mA load	20
• Added min and max values for VIH and VIL	21
• Added SPI timing parameters	22
• Added *IEEE 802.15.4 Sensitivity vs Channel Frequency*	24
• Added *BLE Sensitivity vs Channel Frequency*	24
• Added *RF Output Power vs Channel Frequency*	24
• Added *Receive Mode Current vs Supply Voltage (VDDS)* graph	24
• Changed *SoC ADC ENOB vs Sampling Frequency (Input Frequency = FS / 10)* graph	26
• Clarified Brown Out Detector status and functionality in the *Power Modes* table.	33
• Added application circuit schematics and layout for 5XD and 4XS	36

3 Device Comparison

Table 3-1. Device Family Overview

DEVICE	PHY SUPPORT	FLASH (KB)	RAM (KB)	GPIO	PACKAGE(1)
CC2650F128xxx	Multi-Protocol(2)	128	20	31, 15, 10	RGZ, RHB, RSM
CC2640F128xxx	*Bluetooth* low energy	128	20	31, 15, 10	RGZ, RHB, RSM
CC2630F128xxx	IEEE 802.15.4 Zigbee(/6LoWPAN)	128	20	31, 15, 10	RGZ, RHB, RSM
CC2620F128xxx	IEEE 802.15.4 (RF4CE)	128	20	31, 10	RGZ, RSM

(1) Package designator replaces the xxx in device name to form a complete device name, RGZ is 7-mm × 7-mm VQFN48, RHB is 5-mm × 5-mm VQFN32, and RSM is 4-mm × 4-mm VQFN32.
(2) The CC2650 device supports all PHYs and can be reflashed to run all the supported standards.

Copyright © 2015, Texas Instruments Incorporated

4 Terminal Configuration and Functions

4.1 Pin Diagram – RGZ Package

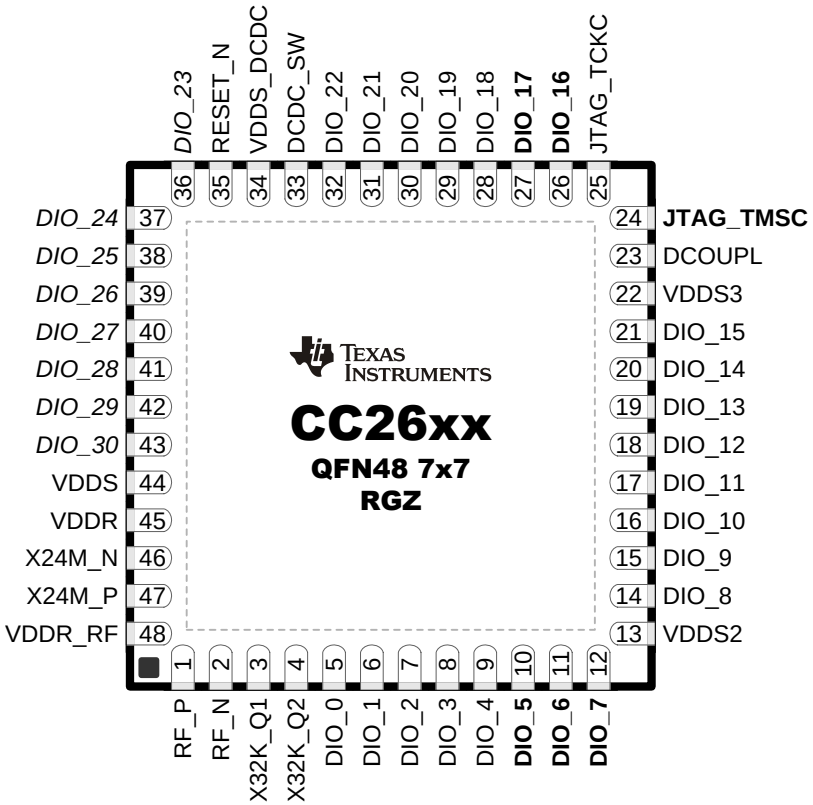

Note: I/O pins marked in **bold** have high drive capabilities. I/O pins marked in *italics* have analog capabilities.

Figure 4-1. RGZ (7-mm × 7-mm) Pinout, 0.5-mm Pitch

4.2 Signal Descriptions – RGZ Package

Table 4-1. Signal Descriptions – RGZ Package

NAME	NO.	TYPE	DESCRIPTION
DCDC_SW	33	Power	Output from internal DC-DC (1)
DCOUPL	23	Power	1.27-V regulated digital-supply decoupling capacitor (2)
DIO_0	5	Digital I/O	GPIO, Sensor Controller
DIO_1	6	Digital I/O	GPIO, Sensor Controller
DIO_2	7	Digital I/O	GPIO, Sensor Controller
DIO_3	8	Digital I/O	GPIO, Sensor Controller
DIO_4	9	Digital I/O	GPIO, Sensor Controller
DIO_5	10	Digital I/O	GPIO, Sensor Controller, high-drive capability
DIO_6	11	Digital I/O	GPIO, Sensor Controller, high-drive capability
DIO_7	12	Digital I/O	GPIO, Sensor Controller, high-drive capability
DIO_8	14	Digital I/O	GPIO
DIO_9	15	Digital I/O	GPIO
DIO_10	16	Digital I/O	GPIO
DIO_11	17	Digital I/O	GPIO

(1) See 节 8.2, technical reference manual for more details.
(2) Do not supply external circuitry from this pin.

Table 4-1. Signal Descriptions – RGZ Package (continued)

NAME	NO.	TYPE	DESCRIPTION
DIO_12	18	Digital I/O	GPIO
DIO_13	19	Digital I/O	GPIO
DIO_14	20	Digital I/O	GPIO
DIO_15	21	Digital I/O	GPIO
DIO_16	26	Digital I/O	GPIO, JTAG_TDO, high-drive capability
DIO_17	27	Digital I/O	GPIO, JTAG_TDI, high-drive capability
DIO_18	28	Digital I/O	GPIO
DIO_19	29	Digital I/O	GPIO
DIO_20	30	Digital I/O	GPIO
DIO_21	31	Digital I/O	GPIO
DIO_22	32	Digital I/O	GPIO
DIO_23	36	Digital/Analog I/O	GPIO, Sensor Controller, Analog
DIO_24	37	Digital/Analog I/O	GPIO, Sensor Controller, Analog
DIO_25	38	Digital/Analog I/O	GPIO, Sensor Controller, Analog
DIO_26	39	Digital/Analog I/O	GPIO, Sensor Controller, Analog
DIO_27	40	Digital/Analog I/O	GPIO, Sensor Controller, Analog
DIO_28	41	Digital/Analog I/O	GPIO, Sensor Controller, Analog
DIO_29	42	Digital/Analog I/O	GPIO, Sensor Controller, Analog
DIO_30	43	Digital/Analog I/O	GPIO, Sensor Controller, Analog
JTAG_TMSC	24	Digital I/O	JTAG TMSC, high-drive capability
JTAG_TCKC	25	Digital I/O	JTAG TCKC
RESET_N	35	Digital input	Reset, active-low. No internal pullup.
RF_P	1	RF I/O	Positive RF input signal to LNA during RX Positive RF output signal to PA during TX
RF_N	2	RF I/O	Negative RF input signal to LNA during RX Negative RF output signal to PA during TX
VDDR	45	Power	1.7-V to 1.95-V supply, typically connect to output of internal DC-DC (3) (2)
VDDR_RF	48	Power	1.7-V to 1.95-V supply, typically connect to output of internal DC-DC (4) (2)
VDDS	44	Power	1.8-V to 3.8-V main chip supply (1)
VDDS2	13	Power	1.8-V to 3.8-V DIO supply (1)
VDDS3	22	Power	1.8-V to 3.8-V DIO supply (1)
VDDS_DCDC	34	Power	1.8-V to 3.8-V DC-DC supply
X32K_Q1	3	Analog I/O	32-kHz crystal oscillator pin 1
X32K_Q2	4	Analog I/O	32-kHz crystal oscillator pin 2
X24M_N	46	Analog I/O	24-MHz crystal oscillator pin 1
X24M_P	47	Analog I/O	24-MHz crystal oscillator pin 2
EGP		Power	Ground – Exposed Ground Pad

(3) If internal DC-DC is not used, this pin is supplied internally from the main LDO.
(4) If internal DC-DC is not used, this pin must be connected to VDDR for supply from the main LDO.

Copyright © 2015, Texas Instruments Incorporated

4.3 Pin Diagram – RHB Package

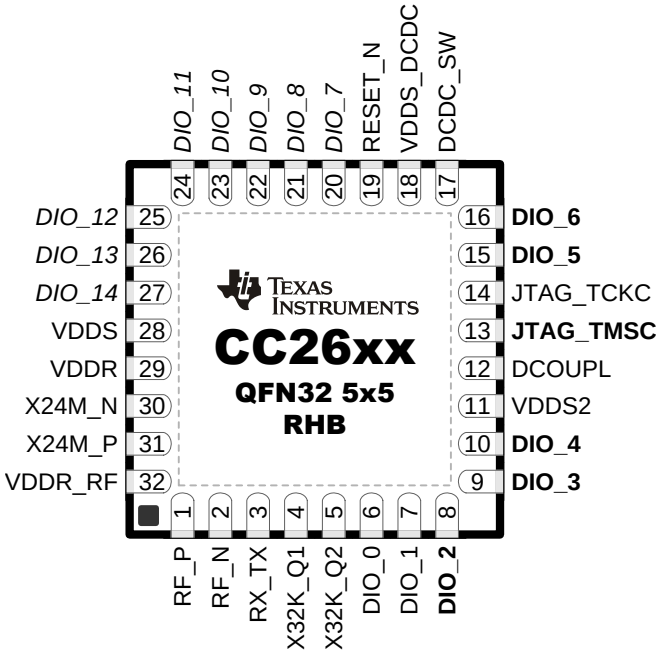

Note: I/O pins marked in **bold** have high drive capabilities. I/O pins marked in *italics* have analog capabilities.

Figure 4-2. RHB (5-mm × 5-mm) Pinout, 0.5-mm Pitch

4.4 Signal Descriptions – RHB Package

Table 4-2. Signal Descriptions – RHB Package

NAME	NO.	TYPE	DESCRIPTION
DCDC_SW	17	Power	Output from internal DC-DC (1)
DCOUPL	12	Power	1.27-V regulated digital-supply decoupling (2)
DIO_0	6	Digital I/O	GPIO, Sensor Controller
DIO_1	7	Digital I/O	GPIO, Sensor Controller
DIO_2	8	Digital I/O	GPIO, Sensor Controller, high-drive capability
DIO_3	9	Digital I/O	GPIO, Sensor Controller, high-drive capability
DIO_4	10	Digital I/O	GPIO, Sensor Controller, high-drive capability
DIO_5	15	Digital I/O	GPIO, High drive capability, JTAG_TDO
DIO_6	16	Digital I/O	GPIO, High drive capability, JTAG_TDI
DIO_7	20	Digital/Analog I/O	GPIO, Sensor Controller, Analog
DIO_8	21	Digital/Analog I/O	GPIO, Sensor Controller, Analog
DIO_9	22	Digital/Analog I/O	GPIO, Sensor Controller, Analog
DIO_10	23	Digital/Analog I/O	GPIO, Sensor Controller, Analog
DIO_11	24	Digital/Analog I/O	GPIO, Sensor Controller, Analog
DIO_12	25	Digital/Analog I/O	GPIO, Sensor Controller, Analog
DIO_13	26	Digital/Analog I/O	GPIO, Sensor Controller, Analog
DIO_14	27	Digital/Analog I/O	GPIO, Sensor Controller, Analog
JTAG_TMSC	13	Digital I/O	JTAG TMSC, high-drive capability
JTAG_TCKC	14	Digital I/O	JTAG TCKC
RESET_N	19	Digital input	Reset, active-low. No internal pullup.

(1) See 节 8.2, technical reference manual for more details.
(2) Do not supply external circuitry from this pin.

Table 4-2. Signal Descriptions – RHB Package (continued)

NAME	NO.	TYPE	DESCRIPTION
RF_N	2	RF I/O	Negative RF input signal to LNA during RX Negative RF output signal to PA during TX
RF_P	1	RF I/O	Positive RF input signal to LNA during RX Positive RF output signal to PA during TX
RX_TX	3	RF I/O	Optional bias pin for the RF LNA
VDDR	29	Power	1.7-V to 1.95-V supply, typically connect to output of internal DC-DC(3)(2)
VDDR_RF	32	Power	1.7-V to 1.95-V supply, typically connect to output of internal DC-DC(4)(2)
VDDS	28	Power	1.8-V to 3.8-V main chip supply(1)
VDDS2	11	Power	1.8-V to 3.8-V GPIO supply(1)
VDDS_DCDC	18	Power	1.8-V to 3.8-V DC-DC supply
X32K_Q1	4	Analog I/O	32-kHz crystal oscillator pin 1
X32K_Q2	5	Analog I/O	32-kHz crystal oscillator pin 2
X24M_N	30	Analog I/O	24-MHz crystal oscillator pin 1
X24M_P	31	Analog I/O	24-MHz crystal oscillator pin 2
EGP		Power	Ground – Exposed Ground Pad

(3) If internal DC-DC is not used, this pin is supplied internally from the main LDO.
(4) If internal DC-DC is not used, this pin must be connected to VDDR for supply from the main LDO.

Copyright © 2015, Texas Instruments Incorporated

4.5 Pin Diagram – RSM Package

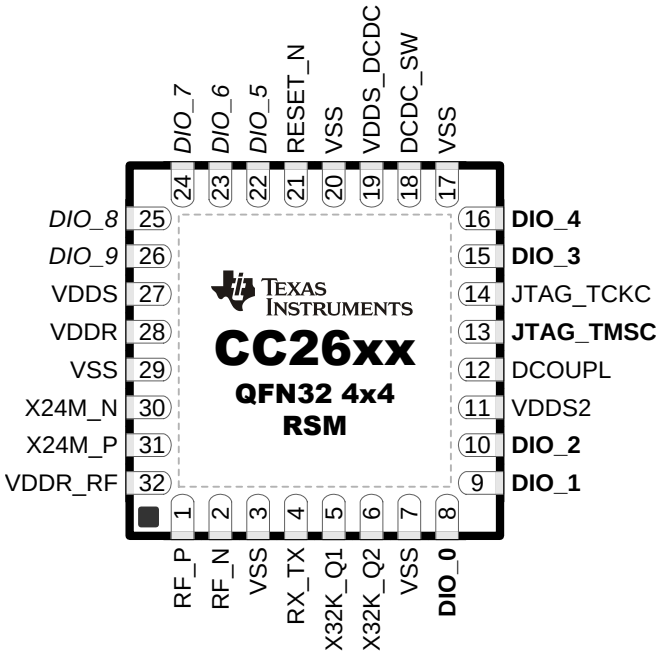

Note: I/O pins marked in **bold** have high drive capabilities. I/O pins marked in *italics* have analog capabilities.

Figure 4-3. RSM (4-mm × 4-mm) Pinout, 0.4-mm Pitch

4.6 Signal Descriptions – RSM Package

Table 4-3. Signal Descriptions – RSM Package

NAME	NO.	TYPE	DESCRIPTION
DCDC_SW	18	Power	Output from internal DC-DC. (1). Tie to ground for external regulator mode (1.7-V to 1.95-V operation)
DCOUPL	12	Power	1.27-V regulated digital-supply decoupling capacitor(2)
DIO_0	8	Digital I/O	GPIO, Sensor Controller, high-drive capability
DIO_1	9	Digital I/O	GPIO, Sensor Controller, high-drive capability
DIO_2	10	Digital I/O	GPIO, Sensor Controller, high-drive capability
DIO_3	15	Digital I/O	GPIO, High drive capability, JTAG_TDO
DIO_4	16	Digital I/O	GPIO, High drive capability, JTAG_TDI
DIO_5	22	Digital/Analog I/O	GPIO, Sensor Controller, Analog
DIO_6	23	Digital/Analog I/O	GPIO, Sensor Controller, Analog
DIO_7	24	Digital/Analog I/O	GPIO, Sensor Controller, Analog
DIO_8	25	Digital/Analog I/O	GPIO, Sensor Controller, Analog
DIO_9	26	Digital/Analog I/O	GPIO, Sensor Controller, Analog
JTAG_TMSC	13	Digital I/O	JTAG TMSC
JTAG_TCKC	14	Digital I/O	JTAG TCKC
RESET_N	21	Digital Input	Reset, active-low. No internal pullup.
RF_N	2	RF I/O	Negative RF input signal to LNA during RX Negative RF output signal to PA during TX
RF_P	1	RF I/O	Positive RF input signal to LNA during RX Positive RF output signal to PA during TX
RX_TX	4	RF I/O	Optional bias pin for the RF LNA

(1) See 节 8.2, technical reference manual for more details.
(2) Do not supply external circuitry from this pin.

Table 4-3. Signal Descriptions – RSM Package (continued)

NAME	NO.	TYPE	DESCRIPTION
VDDR	28	Power	1.7-V to 1.95-V supply, typically connect to output of internal DC-DC. (3) (2)
VDDR_RF	32	Power	1.7-V to 1.95-V supply, typically connect to output of internal DC-DC (4) (2)
VDDS	27	Power	1.8-V to 3.8-V main chip supply (1)
VDDS2	11	Power	1.8-V to 3.8-V GPIO supply (1)
VDDS_DCDC	19	Power	1.8-V to 3.8-V DC-DC supply. Tie to ground for external regulator mode (1.7-V to 1.95-V operation).
VSS	3, 7, 17, 20, 29	Power	Ground
X32K_Q1	5	Analog I/O	32-kHz crystal oscillator pin 1
X32K_Q2	6	Analog I/O	32-kHz crystal oscillator pin 2
X24M_N	30	Analog I/O	24-MHz crystal oscillator pin 1
X24M_P	31	Analog I/O	24-MHz crystal oscillator pin 2
EGP		Power	Ground – Exposed Ground Pad

(3) If internal DC-DC is not used, this pin is supplied internally from the main LDO.
(4) If internal DC-DC is not used, this pin must be connected to VDDR for supply from the main LDO.

Copyright © 2015, Texas Instruments Incorporated

5 Specifications

5.1 Absolute Maximum Ratings

over operating free-air temperature range (unless otherwise noted)[1][2]

		MIN	MAX	UNIT
Supply voltage, VDDS[3]	VDDR supplied by internal DC-DC regulator or internal GLDO	–0.3	4.1	V
Supply voltage, VDDS[3] and VDDR	External regulator mode (VDDS and VDDR pins connected on PCB)	–0.3	2.25	V
Voltage on any digital pin[4]		–0.3	VDDS + 0.3, max 4.1	V
Voltage on crystal oscillator pins, X32K_Q1, X32K_Q2, X24M_N and X24M_P		–0.3	VDDR + 0.3, max 2.25	V
Voltage on ADC input (V_{in})	Voltage scaling enabled	–0.3	VDDS	V
	Voltage scaling disabled, internal reference	–0.3	1.49	
	Voltage scaling disabled, VDDS as reference	–0.3	VDDS / 2.9	
Input RF level			5	dBm
T_{stg}	Storage temperature	–40	150	°C

(1) All voltage values are with respect to ground, unless otherwise noted.
(2) Stresses beyond those listed under *Absolute Maximum Ratings* may cause permanent damage to the device. These are stress ratings only, and functional operation of the device at these or any other conditions beyond those indicated under *Recommended Operating Conditions* is not implied. Exposure to absolute-maximum-rated conditions for extended periods may affect device reliability.
(3) VDDS2 and VDDS3 must be at the same potential as VDDS.
(4) Including analog-capable DIO.

5.2 ESD Ratings

				VALUE	UNIT
V_{ESD}	Electrostatic discharge (ESD) performance	Human body model (HBM), per ANSI/ESDA/JEDEC JS001[1]	All pins	±2500	V
		Charged device model (CDM), per JESD22-C101[2]	RF pins	±750	
			Non-RF pins	±750	

(1) JEDEC document JEP155 states that 500-V HBM allows safe manufacturing with a standard ESD control process.
(2) JEDEC document JEP157 states that 250-V CDM allows safe manufacturing with a standard ESD control process.

5.3 Recommended Operating Conditions

over operating free-air temperature range (unless otherwise noted)

		MIN	MAX	UNIT
Ambient temperature range		–40	85	°C
Operating supply voltage (VDDS and VDDR), external regulator mode	For operation in 1.8-V systems (VDDS and VDDR pins connected on PCB, internal DC-DC cannot be used)	1.7	1.95	V
Operating supply voltage (VDDS)	For operation in battery-powered and 3.3-V systems (internal DC-DC can be used to minimize power consumption)	1.8	3.8	V

Copyright © 2015, Texas Instruments Incorporated

5.4 Power Consumption Summary

Measured on the TI CC2650EM-5XD reference design with T_c = 25°C, V_{DDS} = 3.0 V with internal DC-DC converter, unless otherwise noted.

PARAMETER		TEST CONDITIONS	MIN	TYP	MAX	UNIT
I_{core}	Core current consumption	Reset. RESET_N pin asserted or VDDS below Power-on-Reset threshold		100		nA
		Shutdown. No clocks running, no retention		150		nA
		Standby. With RTC, CPU, RAM and (partial) register retention. RCOSC_LF		1		µA
		Standby. With RTC, CPU, RAM and (partial) register retention. XOSC_LF		1.2		µA
		Standby. With Cache, RTC, CPU, RAM and (partial) register retention. RCOSC_LF		2.5		µA
		Standby. With Cache, RTC, CPU, RAM and (partial) register retention. XOSC_LF		2.7		µA
		Idle. Supply Systems and RAM powered.		550		µA
		Active. Core running CoreMark		1.45 mA + 31 µA/MHz		
		Radio RX (1)		5.9		mA
		Radio RX (2)		6.1		mA
		Radio TX, 0-dBm output power (1)		6.1		mA
		Radio TX, 5-dBm output power (2)		9.1		mA
Peripheral Current Consumption (Adds to core current I_{core} for each peripheral unit activated) (3)						
I_{peri}	Peripheral power domain	Delta current with domain enabled		20		µA
	Serial power domain	Delta current with domain enabled		13		µA
	RF Core	Delta current with power domain enabled, clock enabled, RF core idle		237		µA
	µDMA	Delta current with clock enabled, module idle		130		µA
	Timers	Delta current with clock enabled, module idle		113		µA
	I^2C	Delta current with clock enabled, module idle		12		µA
	I2S	Delta current with clock enabled, module idle		36		µA
	SSI	Delta current with clock enabled, module idle		93		µA
	UART	Delta current with clock enabled, module idle		164		µA

(1) Single-ended RF mode is optimized for size and power consumption. Measured on CC2650EM-4XS.
(2) Differential RF mode is optimized for RF performance. Measured on CC2650EM-5XD.
(3) I_{peri} is not supported in Standby or Shutdown.

5.5 General Characteristics

Measured on the TI CC2650EM-5XD reference design with T_c = 25°C, V_{DDS} = 3.0 V, unless otherwise noted.

PARAMETER	TEST CONDITIONS	MIN	TYP	MAX	UNIT
FLASH MEMORY					
Supported flash erase cycles before failure		100			k Cycles
Flash page/sector erase current	Average delta current		12.6		mA
Flash page/sector size			4		KB
Flash write current	Average delta current, 4 bytes at a time		8.15		mA
Flash page/sector erase time (1)			8		ms
Flash write time (1)	4 bytes at a time		8		µs

(1) This number is dependent on Flash aging and will increase over time and erase cycles.

Copyright © 2015, Texas Instruments Incorporated

5.6 1-Mbps GFSK (*Bluetooth* Low Energy) – RX

Measured on the TI CC2650EM-5XD reference design with T_c = 25°C, V_{DDS} = 3.0 V, f_{RF} = 2440 MHz, unless otherwise noted.

PARAMETER	TEST CONDITIONS	MIN	TYP	MAX	UNIT
Receiver sensitivity	Differential mode. Measured at the CC2650EM-5XD SMA connector, BER = 10^{-3}		–97		dBm
Receiver sensitivity	Single-ended mode. Measured on CC2650EM-4XS, at the SMA connector, BER = 10^{-3}		–96		dBm
Receiver saturation	Differential mode. Measured at the CC2650EM-5XD SMA connector, BER = 10^{-3}		4		dBm
Receiver saturation	Single-ended mode. Measured on CC2650EM-4XS, at the SMA connector, BER = 10^{-3}		0		dBm
Frequency error tolerance	Difference between the incoming carrier frequency and the internally generated carrier frequency	–350		350	kHz
Data rate error tolerance	Difference between incoming data rate and the internally generated data rate	–750		750	ppm
Co-channel rejection (1)	Wanted signal at –67 dBm, modulated interferer in channel, BER = 10^{-3}		–6		dB
Selectivity, ±1 MHz (1)	Wanted signal at –67 dBm, modulated interferer at ±1 MHz, BER = 10^{-3}		7 / 3(2)		dB
Selectivity, ±2 MHz (1)	Wanted signal at –67 dBm, modulated interferer at ±2 MHz, BER = 10^{-3}		34 / 25(2)		dB
Selectivity, ±3 MHz (1)	Wanted signal at –67 dBm, modulated interferer at ±3 MHz, BER = 10^{-3}		38 / 26(2)		dB
Selectivity, ±4 MHz (1)	Wanted signal at –67 dBm, modulated interferer at ±4 MHz, BER = 10^{-3}		42 / 29(2)		dB
Selectivity, ±5 MHz or more(1)	Wanted signal at –67 dBm, modulated interferer at ≥ ±5 MHz, BER = 10^{-3}		32		dB
Selectivity, Image frequency(1)	Wanted signal at –67 dBm, modulated interferer at image frequency, BER = 10^{-3}		25		dB
Selectivity, Image frequency ±1 MHz(1)	Wanted signal at –67 dBm, modulated interferer at ±1 MHz from image frequency, BER = 10^{-3}		3 / 26(2)		dB
Out-of-band blocking (3)	30 MHz to 2000 MHz		–20		dBm
Out-of-band blocking	2003 MHz to 2399 MHz		–5		dBm
Out-of-band blocking	2484 MHz to 2997 MHz		–8		dBm
Out-of-band blocking	3000 MHz to 12.75 GHz		–8		dBm
Intermodulation	Wanted signal at 2402 MHz, –64 dBm. Two interferers at 2405 and 2408 MHz respectively, at the given power level		–34		dBm
Spurious emissions, 30 to 1000 MHz	Conducted measurement in a 50-Ω single-ended load. Suitable for systems targeting compliance with EN 300 328, EN 300 440 class 2, FCC CFR47, Part 15 and ARIB STD-T-66		–71		dBm
Spurious emissions, 1 to 12.75 GHz	Conducted measurement in a 50 Ω single-ended load. Suitable for systems targeting compliance with EN 300 328, EN 300 440 class 2, FCC CFR47, Part 15 and ARIB STD-T-66		–62		dBm
RSSI dynamic range			70		dB
RSSI accuracy			±4		dB

(1) Numbers given as I/C dB.
(2) X / Y, where X is +N MHz and Y is –N MHz.
(3) Excluding one exception at F_{wanted} / 2, per *Bluetooth* Specification.

Copyright © 2015, Texas Instruments Incorporated

5.7 1-Mbps GFSK (*Bluetooth* Low Energy) – TX

Measured on the TI CC2650EM-5XD reference design with T_c = 25°C, V_{DDS} = 3.0 V, f_{RF} = 2440 MHz, unless otherwise noted.

PARAMETER	TEST CONDITIONS	MIN	TYP	MAX	UNIT
Output power, highest setting	Differential mode, delivered to a single-ended 50-Ω load through a balun		5		dBm
Output power, highest setting	Measured on CC2650EM-4XS, delivered to a single-ended 50-Ω load		2		dBm
Output power, lowest setting	Delivered to a single-ended 50-Ω load through a balun		–21		dBm
Spurious emission conducted measurement(1)	f < 1 GHz, outside restricted bands		–43		dBm
	f < 1 GHz, restricted bands ETSI		–65		dBm
	f < 1 GHz, restricted bands FCC		–76		dBm
	f > 1 GHz, including harmonics		–46		dBm

(1) Suitable for systems targeting compliance with worldwide radio-frequency regulations ETSI EN 300 328 and EN 300 440 Class 2 (Europe), FCC CFR47 Part 15 (US), and ARIB STD-T66 (Japan).

5.8 IEEE 802.15.4 (Offset Q-PSK DSSS, 250 kbps) – RX

Measured on the TI CC2650EM-5XD reference design with T_c = 25°C, V_{DDS} = 3.0 V, unless otherwise noted.

PARAMETER	TEST CONDITIONS	MIN	TYP	MAX	UNIT
Receiver sensitivity	Differential mode. Measured at the CC2650EM-5XD SMA connector, PER = 1%		–100		dBm
Receiver sensitivity	Single-ended mode. Measured on CC2650EM-4XS, at the SMA connector, PER = 1%		–97		dBm
Receiver saturation	Measured at the CC2650EM-5XD SMA connector, PER = 1%		+4		dBm
Adjacent channel rejection	Wanted signal at –82 dBm, modulated interferer at ±5 MHz, PER = 1%		39		dB
Alternate channel rejection	Wanted signal at –82 dBm, modulated interferer at ±10 MHz, PER = 1%		52		dB
Channel rejection, ±15 MHz or more	Wanted signal at –82 dBm, undesired signal is IEEE 802.15.4 modulated channel, stepped through all channels 2405 to 2480 MHz, PER = 1%		57		dB
Blocking and desensitization, 5 MHz from upper band edge	Wanted signal at –97 dBm (3 dB above the sensitivity level), CW jammer, PER = 1%		64		dB
Blocking and desensitization, 10 MHz from upper band edge	Wanted signal at –97 dBm (3 dB above the sensitivity level), CW jammer, PER = 1%		64		dB
Blocking and desensitization, 20 MHz from upper band edge	Wanted signal at –97 dBm (3 dB above the sensitivity level), CW jammer, PER = 1%		65		dB
Blocking and desensitization, 50 MHz from upper band edge	Wanted signal at –97 dBm (3 dB above the sensitivity level), CW jammer, PER = 1%		68		dB
Blocking and desensitization, –5 MHz from lower band edge	Wanted signal at –97 dBm (3 dB above the sensitivity level), CW jammer, PER = 1%		63		dB
Blocking and desensitization, –10 MHz from lower band edge	Wanted signal at –97 dBm (3 dB above the sensitivity level), CW jammer, PER = 1%		63		dB
Blocking and desensitization, –20 MHz from lower band edge	Wanted signal at –97 dBm (3 dB above the sensitivity level), CW jammer, PER = 1%		65		dB
Blocking and desensitization, –50 MHz from lower band edge	Wanted signal at –97 dBm (3 dB above the sensitivity level), CW jammer, PER = 1%		67		dB
Spurious emissions, 30 MHz to 1000 MHz	Conducted measurement in a 50 Ω single-ended load. Suitable for systems targeting compliance with EN 300 328, EN 300 440 class 2, FCC CFR47, Part 15 and ARIB STD-T-66		–71		dBm
Spurious emissions, 1 GHz to 12.75 GHz	Conducted measurement in a 50 Ω single-ended load. Suitable for systems targeting compliance with EN 300 328, EN 300 440 class 2, FCC CFR47, Part 15 and ARIB STD-T-66		–62		dBm
Frequency error tolerance	Difference between the incoming carrier frequency and the internally generated carrier frequency		>200		ppm

Copyright © 2015, Texas Instruments Incorporated

IEEE 802.15.4 (Offset Q-PSK DSSS, 250 kbps) – RX *(continued)*

Measured on the TI CC2650EM-5XD reference design with T_c = 25°C, V_{DDS} = 3.0 V, unless otherwise noted.

PARAMETER	TEST CONDITIONS	MIN	TYP	MAX	UNIT
Symbol rate error tolerance	Difference between incoming symbol rate and the internally generated symbol rate		>1000		ppm
RSSI dynamic range			100		dB
RSSI accuracy			±4		dB

5.9 IEEE 802.15.4 (Offset Q-PSK DSSS, 250 kbps) – TX

Measured on the TI CC2650EM-5XD reference design with T_c = 25°C, V_{DDS} = 3.0 V, unless otherwise noted.

PARAMETER	TEST CONDITIONS	MIN	TYP	MAX	UNIT
Output power, highest setting	Delivered to a single-ended 50-Ω load through a balun		5		dBm
Output power, highest setting	Measured on CC2650EM-4XS, delivered to a single-ended 50-Ω load		2		dBm
Output power, lowest setting	Delivered to a single-ended 50-Ω load through a balun		–21		dBm
Error vector magnitude	At maximum output power		2%		
Spurious emission conducted measurement	f < 1 GHz, outside restricted bands		–43		dBm
	f < 1 GHz, restricted bands ETSI		–65		
	f < 1 GHz, restricted bands FCC		–76		
	f > 1 GHz, including harmonics		–46		
	Suitable for systems targeting compliance with worldwide radio-frequency regulations ETSI EN 300 328 and EN 300 440 Class 2 (Europe), FCC CFR47 Part 15 (US), and ARIB STD-T66 (Japan)				

5.10 24-MHz Crystal Oscillator (XOSC_HF)

Measured on the TI CC2650EM-5XD reference design with T_c = 25°C, V_{DDS} = 3.0 V, unless otherwise noted.(1)

PARAMETER	TEST CONDITIONS	MIN	TYP	MAX	UNIT
ESR Equivalent series resistance			20	60	Ω
L_M Motional inductance	Relates to load capacitance (C_L in Farads)		$< 1.6 \times 10^{-24} / C_L^2$		H
C_L Crystal load capacitance		5		9	pF
Crystal frequency			24		MHz
Crystal frequency tolerance(2)		–40		40	ppm
Start-up time(3)			150		µs

(1) Probing or otherwise stopping the XTAL while the DC-DC converter is enabled may cause permanent damage to the device.
(2) Includes initial tolerance of the crystal, drift over temperature, ageing and frequency pulling due to incorrect load capacitance. As per *Bluetooth* and IEEE 802.15.4 specification.
(3) Kick-started based on a temperature and aging compensated RCOSC_HF using precharge injection.

5.11 32.768-kHz Crystal Oscillator (XOSC_LF)

Measured on the TI CC2650EM-5XD reference design with T_c = 25°C, V_{DDS} = 3.0 V, unless otherwise noted.

PARAMETER	TEST CONDITIONS	MIN	TYP	MAX	UNIT
Crystal frequency			32.768		kHz
Crystal frequency tolerance, *Bluetooth* low-energy applications(1)		–500		500	ppm
ESR Equivalent series resistance			30	100	kΩ
C_L Crystal load capacitance		6		12	pF

(1) Includes initial tolerance of the crystal, drift over temperature, ageing and frequency pulling due to incorrect load capacitance. As per *Bluetooth* and IEEE 802.15.4 specification.

Copyright © 2015, Texas Instruments Incorporated

5.12 48-MHz RC Oscillator (RCOSC_HF)

Measured on the TI CC2650EM-5XD reference design with T_c = 25°C, V_{DDS} = 3.0 V, unless otherwise noted.

PARAMETER	TEST CONDITIONS	MIN	TYP	MAX	UNIT
Frequency			48		MHz
Uncalibrated frequency accuracy			±1%		
Calibrated frequency accuracy (1)			±0.25%		
Start-up time			5		µs

(1) Accuracy relative to the calibration source (XOSC_HF).

5.13 32-kHz RC Oscillator (RCOSC_LF)

Measured on the TI CC2650EM-5XD reference design with T_c = 25°C, V_{DDS} = 3.0 V, unless otherwise noted.

PARAMETER	TEST CONDITIONS	MIN	TYP	MAX	UNIT
Calibrated frequency			32.8		kHz
Temperature coefficient			50		ppm/°C

5.14 ADC Characteristics

T_c = 25°C, V_{DDS} = 3.0 V and voltage scaling enabled, unless otherwise noted. (1)

PARAMETER		TEST CONDITIONS	MIN	TYP	MAX	UNIT
	Input voltage range		0		VDDS	V
	Resolution			12		Bits
	Sample rate				200	ksps
	Offset	Internal 4.3-V equivalent reference (2)		2		LSB
	Gain error	Internal 4.3-V equivalent reference (2)		2.4		LSB
DNL (3)	Differential nonlinearity			>–1		LSB
INL (4)	Integral nonlinearity			±3		LSB
ENOB	Effective number of bits	Internal 4.3-V equivalent reference (2), 200 ksps, 9.6-kHz input tone		9.8		Bits
		VDDS as reference, 200 ksps, 9.6-kHz input tone		10		
		Internal 1.44-V reference, voltage scaling disabled, 32 samples average, 200 ksps, 300-Hz input tone		11.1		
THD	Total harmonic distortion	Internal 4.3-V equivalent reference (2), 200 ksps, 9.6-kHz input tone		–65		dB
		VDDS as reference, 200 ksps, 9.6-kHz input tone		–69		
		Internal 1.44-V reference, voltage scaling disabled, 32 samples average, 200 ksps, 300-Hz input tone		–71		
SINAD, SNDR	Signal-to-noise and Distortion ratio	Internal 4.3-V equivalent reference (2), 200 ksps, 9.6-kHz input tone		60		dB
		VDDS as reference, 200 ksps, 9.6-kHz input tone		63		
		Internal 1.44-V reference, voltage scaling disabled, 32 samples average, 200 ksps, 300-Hz input tone		69		
SFDR	Spurious-free dynamic range	Internal 4.3-V equivalent reference (2), 200 ksps, 9.6-kHz input tone		67		dB
		VDDS as reference, 200 ksps, 9.6-kHz input tone		72		
		Internal 1.44-V reference, voltage scaling disabled, 32 samples average, 200 ksps, 300-Hz input tone		73		
	Conversion time	Serial conversion, time-to-output, 24-MHz clock		50		clock-cycles
	Current consumption	Internal 4.3-V equivalent reference (2)		0.66		mA
	Current consumption	VDDS as reference		0.75		mA

(1) Using IEEE Std 1241™-2010 for terminology and test methods.
(2) Input signal scaled down internally before conversion, as if voltage range was 0 to 4.3 V.
(3) No missing codes. Positive DNL typically varies from +0.3 to +3.5, depending on device (see Figure 5-24).
(4) For a typical example, see Figure 5-25.

Copyright © 2015, Texas Instruments Incorporated

ADC Characteristics *(continued)*

T_c = 25°C, V_{DDS} = 3.0 V and voltage scaling enabled, unless otherwise noted.[1]

PARAMETER	TEST CONDITIONS	MIN	TYP	MAX	UNIT
Reference voltage	Equivalent fixed internal reference (input voltage scaling enabled)		4.3[2][5]		V
Reference voltage	Fixed internal reference (input voltage scaling disabled)		1.44 ±1%		V
Reference voltage	VDDS as reference (Also known as *RELATIVE*) (input voltage scaling enabled)		VDDS		V
Reference voltage	VDDS as reference (Also known as *RELATIVE*) (input voltage scaling disabled)		VDDS / 2.82[5]		V
Input Impedance	200 ksps, voltage scaling enabled. Capacitive input, Input impedance depends on sampling frequency and sampling time		>1		MΩ

(5) Applied voltage must be within absolute maximum ratings (Section 5.1) at all times.

5.15 Temperature Sensor

Measured on the TI CC2650EM-5XD reference design with T_c = 25°C, V_{DDS} = 3.0 V, unless otherwise noted.

PARAMETER	TEST CONDITIONS	MIN	TYP	MAX	UNIT
Resolution			4		°C
Range		–40		85	°C
Accuracy			±5		°C
Supply voltage coefficient[1]			3.2		°C/V

(1) Automatically compensated when using supplied driver libraries.

5.16 Battery Monitor

Measured on the TI CC2650EM-5XD reference design with T_c = 25°C, V_{DDS} = 3.0 V, unless otherwise noted.

PARAMETER	TEST CONDITIONS	MIN	TYP	MAX	UNIT
Resolution			50		mV
Range		1.8		3.8	V
Accuracy			13		mV

5.17 Continuous Time Comparator

T_c = 25°C, V_{DDS} = 3.0 V, unless otherwise noted.

PARAMETER	TEST CONDITIONS	MIN	TYP	MAX	UNIT
Input voltage range		0		VDDS	V
External reference voltage		0		VDDS	V
Internal reference voltage	DCOUPL as reference		1.27		V
Offset			3		mV
Hysteresis			<2		mV
Decision time	Step from –10 mV to 10 mV		0.72		µs
Current consumption when enabled[1]			8.6		µA

(1) Additionally, the bias module must be enabled when running in standby mode.

Copyright © 2015, Texas Instruments Incorporated

5.18 Low-Power Clocked Comparator

T_c = 25°C, V_{DDS} = 3.0 V, unless otherwise noted.

PARAMETER	TEST CONDITIONS	MIN	TYP	MAX	UNIT
Input voltage range		0		VDDS	V
Clock frequency			32		kHz
Internal reference voltage, VDDS / 2			1.49 – 1.51		V
Internal reference voltage, VDDS / 3			1.01 – 1.03		V
Internal reference voltage, VDDS / 4			0.78 – 0.79		V
Internal reference voltage, DCOUPL / 1			1.25 – 1.28		V
Internal reference voltage, DCOUPL / 2			0.63 – 0.65		V
Internal reference voltage, DCOUPL / 3			0.42 – 0.44		V
Internal reference voltage, DCOUPL / 4			0.33 – 0.34		V
Offset			<2		mV
Hysteresis			<5		mV
Decision time	Step from –50 mV to 50 mV		<1		clock-cycle
Current consumption when enabled			362		nA

5.19 Programmable Current Source

T_c = 25°C, V_{DDS} = 3.0 V, unless otherwise noted.

PARAMETER	TEST CONDITIONS	MIN	TYP	MAX	UNIT
Current source programmable output range			0.25 – 20		µA
Resolution			0.25		µA
Current consumption(1)	Including current source at maximum programmable output		23		µA

(1) Additionally, the bias module must be enabled when running in standby mode.

5.20 DC Characteristics

PARAMETER	TEST CONDITIONS	MIN	TYP	MAX	UNIT
T_A = 25°C, V_{DDS} = 1.8 V					
GPIO VOH at 8-mA load	IOCURR = 2, high-drive GPIOs only	1.32	1.54		V
GPIO VOL at 8-mA load	IOCURR = 2, high-drive GPIOs only		0.26	0.32	V
GPIO VOH at 4-mA load	IOCURR = 1	1.32	1.58		V
GPIO VOL at 4-mA load	IOCURR = 1		0.21	0.32	V
GPIO pullup current	Input mode, pullup enabled, Vpad = 0 V		71.7		µA
GPIO pulldown current	Input mode, pulldown enabled, Vpad = VDDS		21.1		µA
GPIO high/low input transition, no hysteresis	IH = 0, transition between reading 0 and reading 1		0.88		V
GPIO low-to-high input transition, with hysteresis	IH = 1, transition voltage for input read as 0 → 1		1.07		V
GPIO high-to-low input transition, with hysteresis	IH = 1, transition voltage for input read as 1 → 0		0.74		V
GPIO input hysteresis	IH = 1, difference between 0 → 1 and 1 → 0 points		0.33		V

Copyright © 2015, Texas Instruments Incorporated

DC Characteristics *(continued)*

PARAMETER	TEST CONDITIONS	MIN	TYP	MAX	UNIT
T_A = 25°C, V_{DDS} = 3.0 V					
GPIO VOH at 8-mA load	IOCURR = 2, high-drive GPIOs only		2.68		V
GPIO VOL at 8-mA load	IOCURR = 2, high-drive GPIOs only		0.33		V
GPIO VOH at 4-mA load	IOCURR = 1		2.72		V
GPIO VOL at 4-mA load	IOCURR = 1		0.28		V
T_A = 25°C, V_{DDS} = 3.8 V					
GPIO pullup current	Input mode, pullup enabled, Vpad = 0 V		277		µA
GPIO pulldown current	Input mode, pulldown enabled, Vpad = VDDS		113		µA
GPIO high/low input transition, no hysteresis	IH = 0, transition between reading 0 and reading 1		1.67		V
GPIO low-to-high input transition, with hysteresis	IH = 1, transition voltage for input read as 0 → 1		1.94		V
GPIO high-to-low input transition, with hysteresis	IH = 1, transition voltage for input read as 1 → 0		1.54		V
GPIO input hysteresis	IH = 1, difference between 0 → 1 and 1 → 0 points		0.4		V
T_A = 25°C					
VIH	Lowest GPIO input voltage reliably interpreted as a «High»			0.8	VDDS (1)
VIL	Highest GPIO input voltage reliably interpreted as a «Low»	0.2			VDDS (1)

(1) Each GPIO is referenced to a specific VDDS pin. See the technical reference manual listed in 节 8.2 for more details.

5.21 Thermal Characteristics

NAME	DESCRIPTION	RSM (°C/W) (1) (2)	RHB (°C/W) (1) (2)	RGZ (°C/W) (1) (2)
$R\theta_{JA}$	Junction-to-ambient thermal resistance	36.9	32.8	29.6
$R\theta_{JC(top)}$	Junction-to-case (top) thermal resistance	30.3	24.0	15.7
$R\theta_{JB}$	Junction-to-board thermal resistance	7.6	6.8	6.2
Psi_{JT}	Junction-to-top characterization parameter	0.4	0.3	0.3
Psi_{JB}	Junction-to-board characterization parameter	7.4	6.8	6.2
$R\theta_{JC(bot)}$	Junction-to-case (bottom) thermal resistance	2.1	1.9	1.9

(1) °C/W = degrees Celsius per watt.
(2) These values are based on a JEDEC-defined 2S2P system (with the exception of the Theta JC [$R\theta_{JC}$] value, which is based on a JEDEC-defined 1S0P system) and will change based on environment as well as application. For more information, see these EIA/JEDEC standards:
- JESD51-2, *Integrated Circuits Thermal Test Method Environmental Conditions - Natural Convection (Still Air)*.
- JESD51-3, *Low Effective Thermal Conductivity Test Board for Leaded Surface Mount Packages*.
- JESD51-7, *High Effective Thermal Conductivity Test Board for Leaded Surface Mount Packages*.
- JESD51-9, *Test Boards for Area Array Surface Mount Package Thermal Measurements*.

Power dissipation of 2 W and an ambient temperature of 70ºC is assumed.

5.22 Timing Requirements

			MIN	NOM	MAX	UNIT
Rising supply-voltage slew rate			0		100	mV/µs
Falling supply-voltage slew rate			0		20	mV/µs
Falling supply-voltage slew rate, with low-power flash settings(1)					3	mV/µs
Positive temperature gradient in standby(2)		No limitation for negative temperature gradient, or outside standby mode			5	°C/s
CONTROL INPUT AC CHARACTERISTICS(3)						
RESET_N low duration			1			µs
SYNCHRONOUS SERIAL INTERFACE (SSI) (4)						
S1 (SLAVE) (5)	t_{clk_per}	SSIClk period	12		65024	system clocks
S2 (5)	t_{clk_high}	SSIClk high time		0.5		t_{clk_per}
S3(5)	t_{clk_low}	SSIClk low time		0.5		t_{clk_per}

(1) For smaller coin cell batteries, with high worst-case end-of-life equivalent source resistance, a 22-µF VDDS input capacitor (see Figure 7-1) must be used to ensure compliance with this slew rate.
(2) Applications using RCOSC_LF as sleep timer must also consider the drift in frequency caused by a change in temperature (see Section 5.13).
(3) T_A = –40°C to 85°C, V_{DDS} = 1.7 V to 3.8 V, unless otherwise noted.
(4) T_c = 25°C, V_{DDS} = 3.0 V, unless otherwise noted. Device operating as SLAVE. For SSI MASTER operation, see *Section 5.23*.
(5) Refer to SSI timing diagrams Figure 5-1, Figure 5-2, and Figure 5-3.

5.23 Switching Characteristics

Measured on the TI CC2650EM-5XD reference design with T_c = 25°C, V_{DDS} = 3.0 V, unless otherwise noted.

PARAMETER	TEST CONDITIONS	MIN	TYP	MAX	UNIT
WAKEUP AND TIMING					
Idle → Active			14		µs
Standby → Active			151		µs
Shutdown → Active			1015		µs
SYNCHRONOUS SERIAL INTERFACE (SSI) (1)					
S1 (TX only)(2) t_{clk_per} (SSIClk period)	One-way communication to SLAVE	4		65024	system clocks
S1 (TX and RX)(2) t_{clk_per} (SSIClk period)	Normal duplex operation	8		65024	system clocks
S2 (2) t_{clk_high} (SSIClk high time)			0.5		t_{clk_per}
S3 (2) t_{clk_low}(SSIClk low time)			0.5		t_{clk_per}

(1) Device operating as MASTER. For SSI SLAVE operation, see Section 5.22.
(2) Refer to SSI timing diagrams Figure 5-1, Figure 5-2, and Figure 5-3.

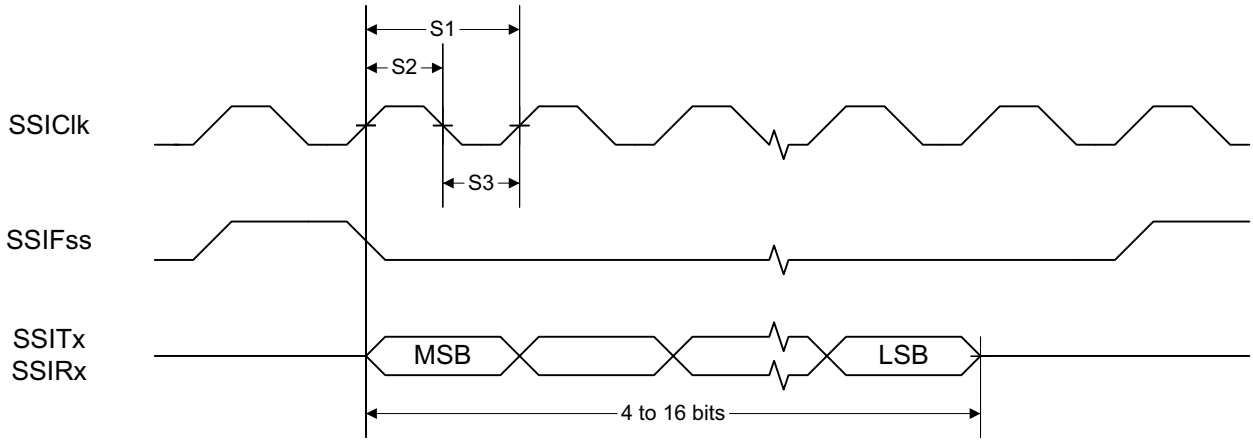

Figure 5-1. SSI Timing for TI Frame Format (FRF = 01), Single Transfer Timing Measurement

Copyright © 2015, Texas Instruments Incorporated

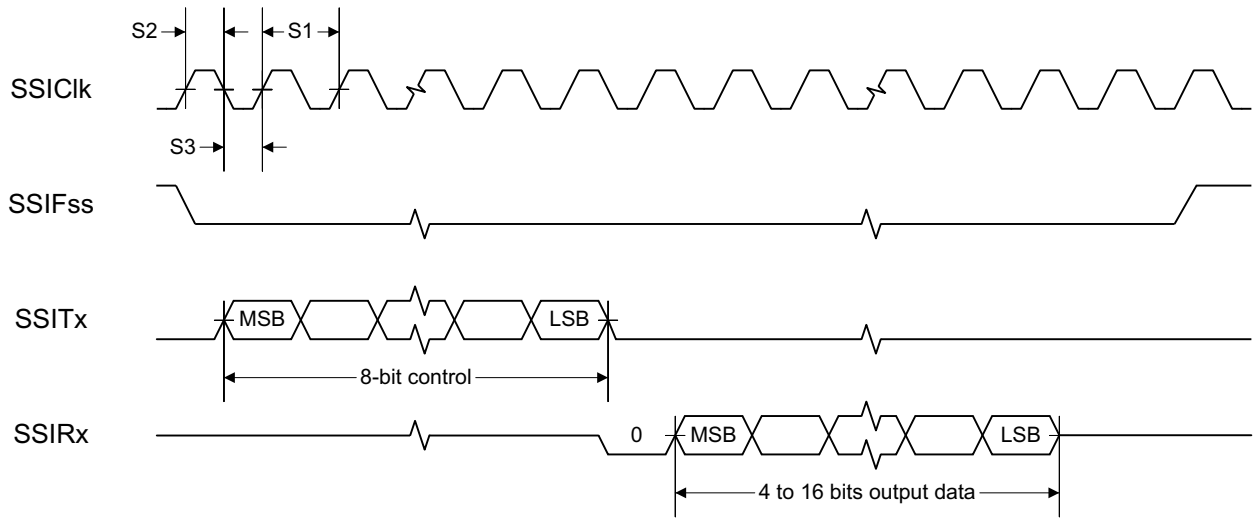

Figure 5-2. SSI Timing for MICROWIRE Frame Format (FRF = 10), Single Transfer

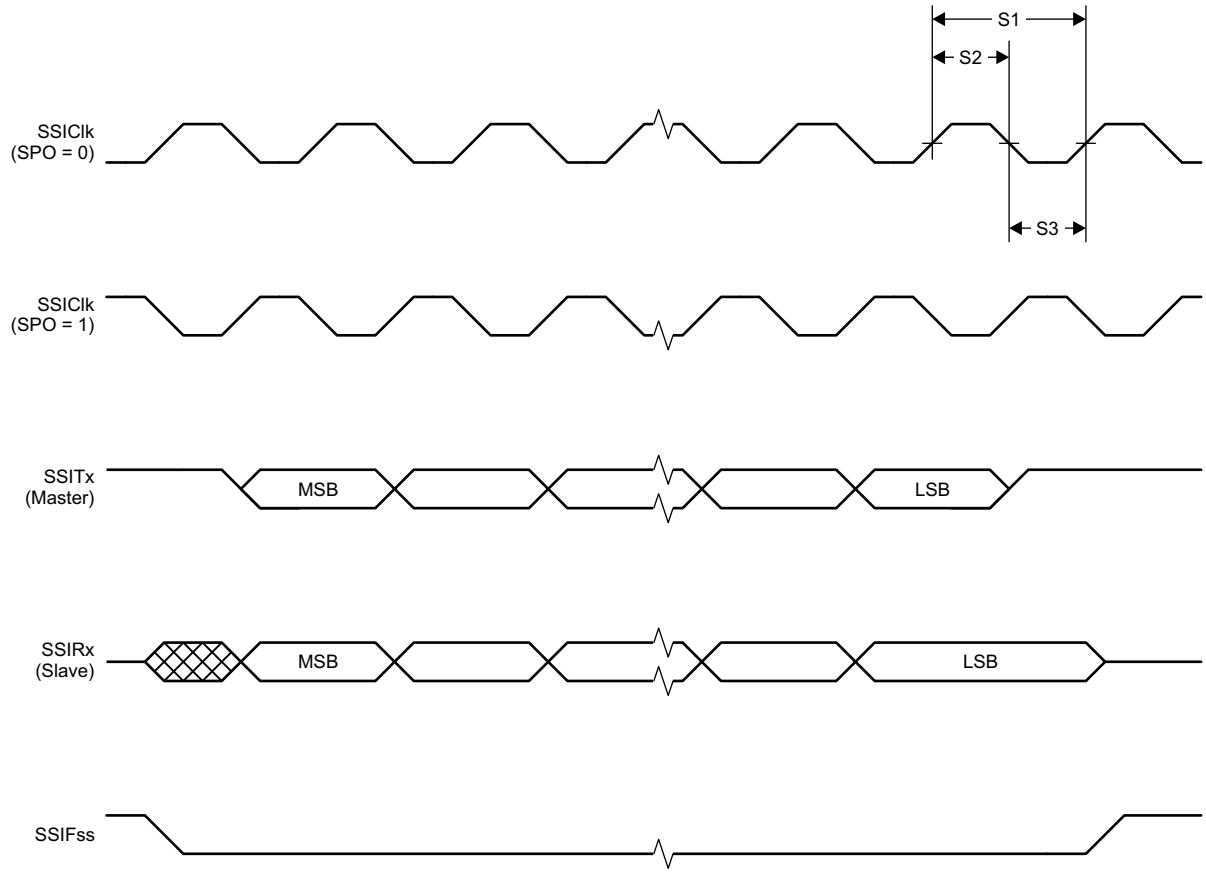

Figure 5-3. SSI Timing for SPI Frame Format (FRF = 00), With SPH = 1

5.24 Typical Characteristics

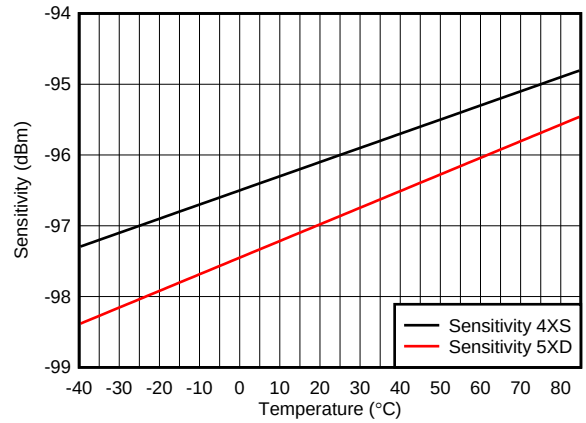

Figure 5-4. BLE Sensitivity vs Temperature

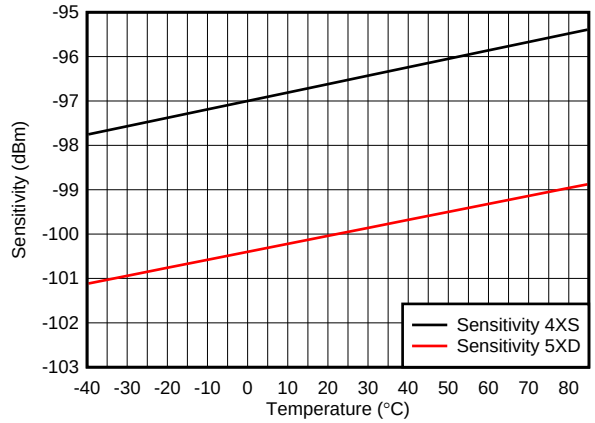

Figure 5-5. IEEE 802.15.4 Sensitivity vs Temperature

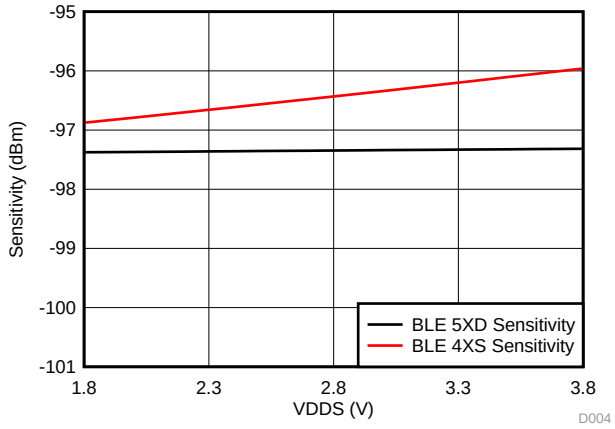

Figure 5-6. BLE Sensitivity vs Supply Voltage (VDDS)

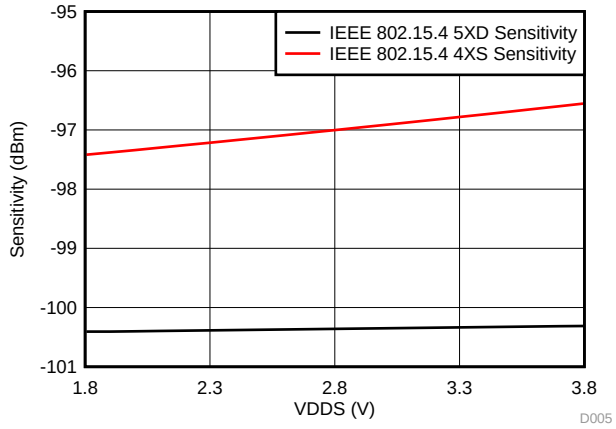

Figure 5-7. IEEE 802.15.4 Sensitivity vs Supply Voltage (VDDS)

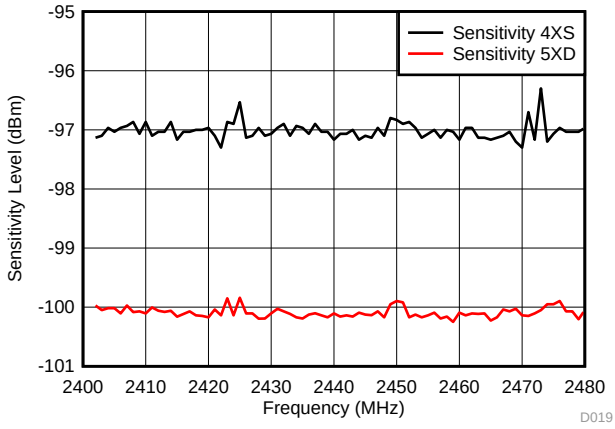

Figure 5-8. IEEE 802.15.4 Sensitivity vs Channel Frequency

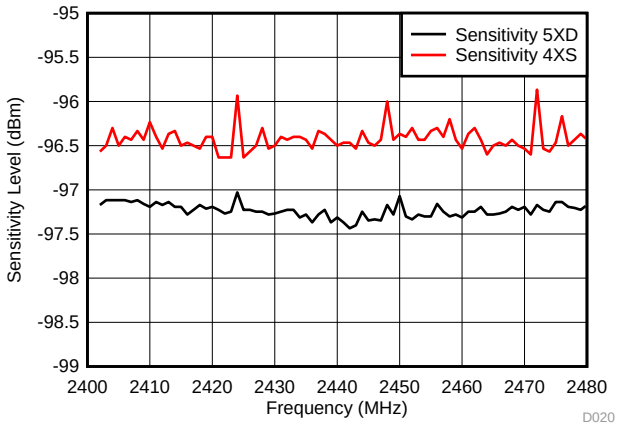

Figure 5-9. BLE Sensitivity vs Channel Frequency

Copyright © 2015, Texas Instruments Incorporated

Typical Characteristics *(continued)*

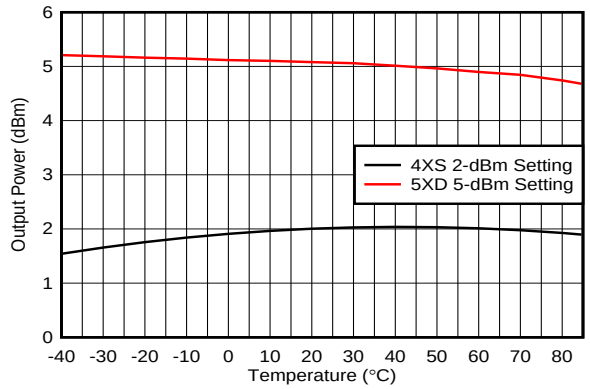

Figure 5-10. TX Output Power vs Temperature

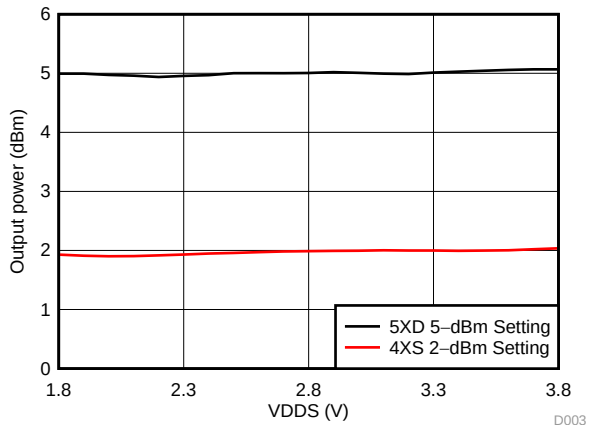

Figure 5-11. TX Output Power vs Supply Voltage (VDDS)

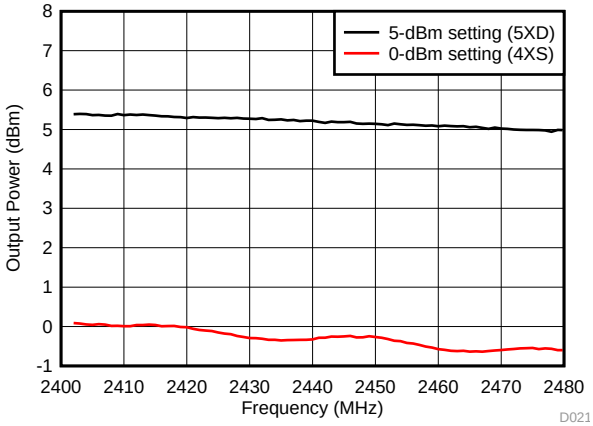

Figure 5-12. TX Output Power vs Channel Frequency

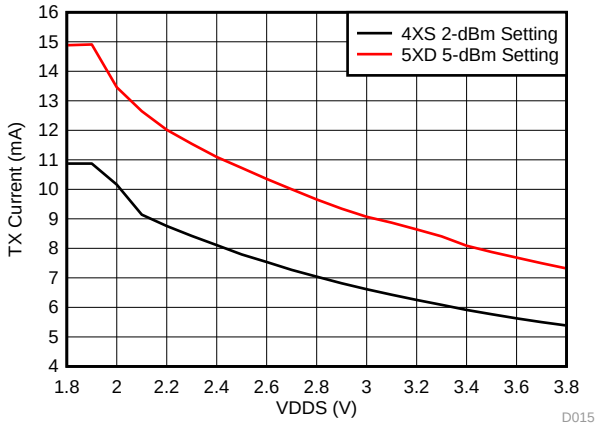

Figure 5-13. TX Current Consumption vs Supply Voltage (VDDS)

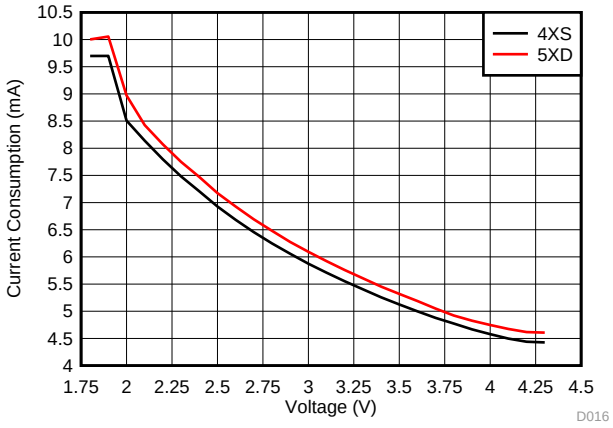

Figure 5-14. RX Mode Current vs Supply Voltage (VDDS)

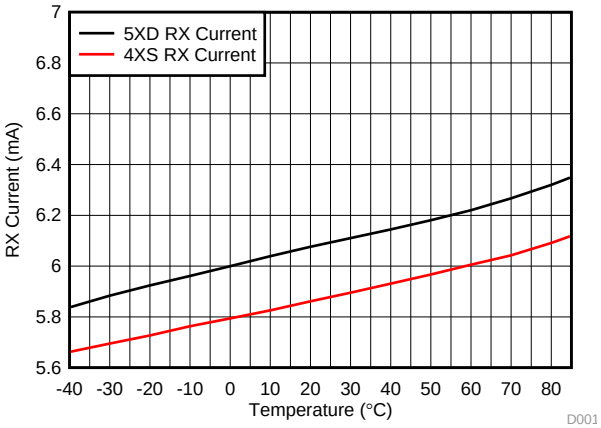

Figure 5-15. RX Mode Current Consumption vs Temperature

Typical Characteristics *(continued)*

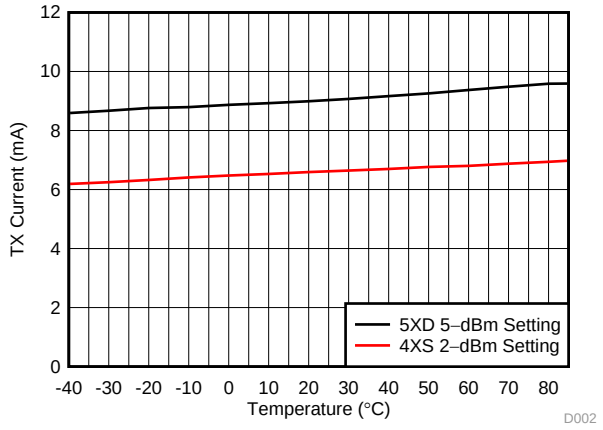

Figure 5-16. TX Mode Current Consumption vs Temperature

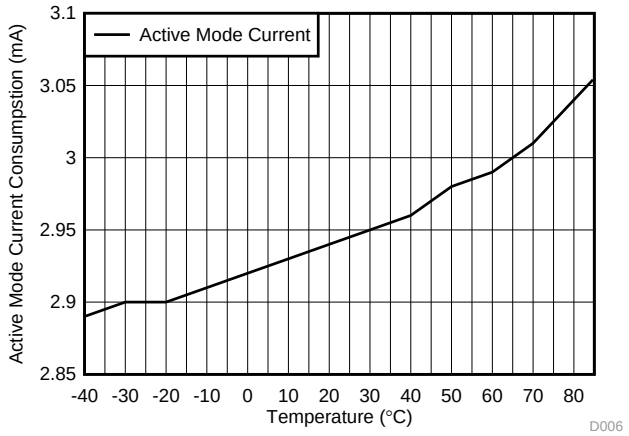

Figure 5-17. Active Mode (MCU Running, No Peripherals) Current Consumption vs Temperature

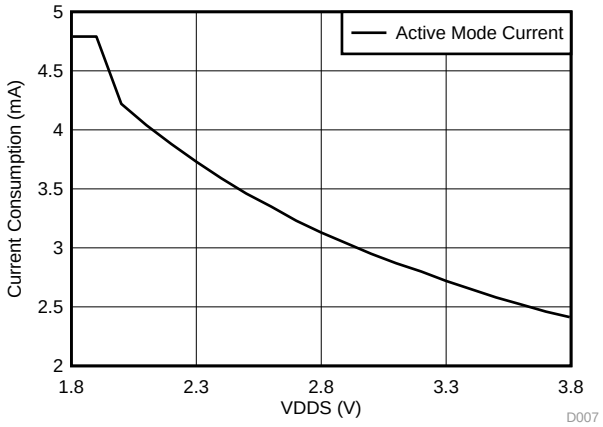

Figure 5-18. Active Mode (MCU Running, No Peripherals) Current Consumption vs Supply Voltage (VDDS)

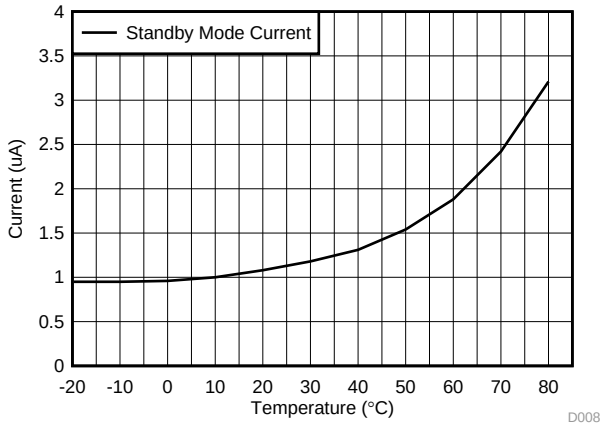

Figure 5-19. Standby Mode Current Consumption With RCOSC RTC vs Temperature

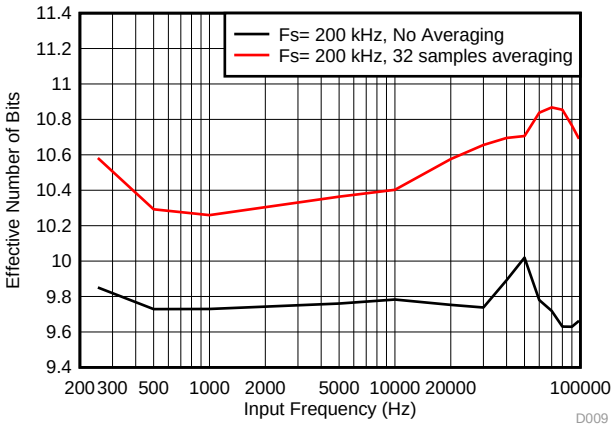

Figure 5-20. SoC ADC Effective Number of Bits vs Input Frequency (Internal Reference, No Scaling)

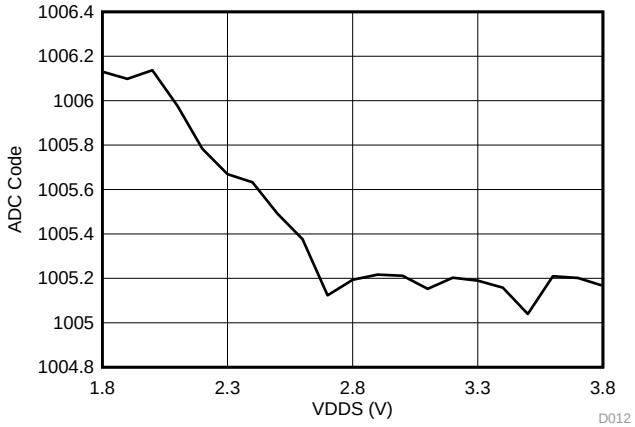

Figure 5-21. SoC ADC Output vs Supply Voltage (Fixed Input, Internal Reference, No Scaling)

Copyright © 2015, Texas Instruments Incorporated

Typical Characteristics *(continued)*

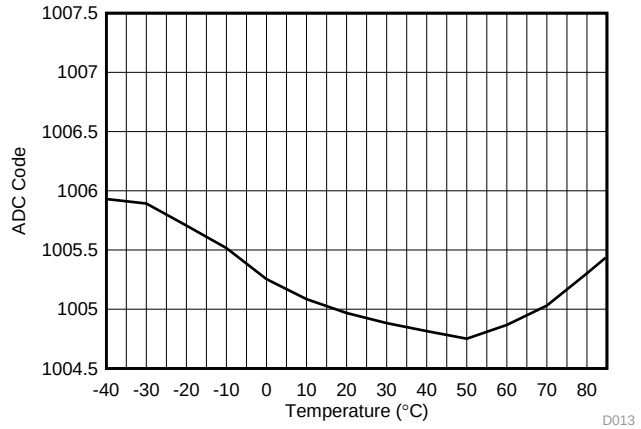

Figure 5-22. SoC ADC Output vs Temperature (Fixed Input, Internal Reference, No Scaling)

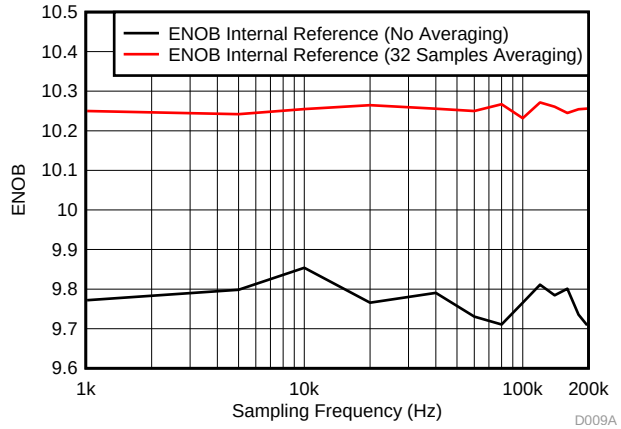

Figure 5-23. SoC ADC ENOB vs Sampling Frequency (Input Frequency = FS / 10)

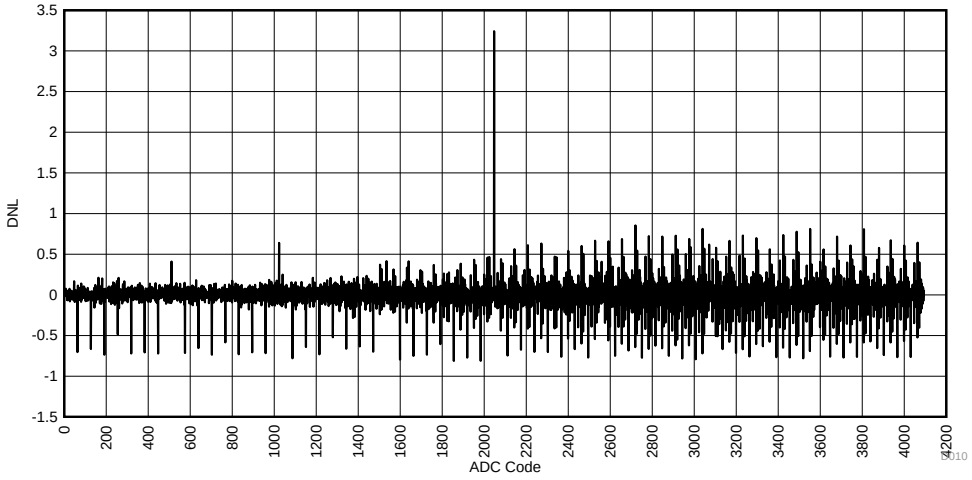

Figure 5-24. SoC ADC DNL vs ADC Code (Internal Reference, No Scaling)

Typical Characteristics *(continued)*

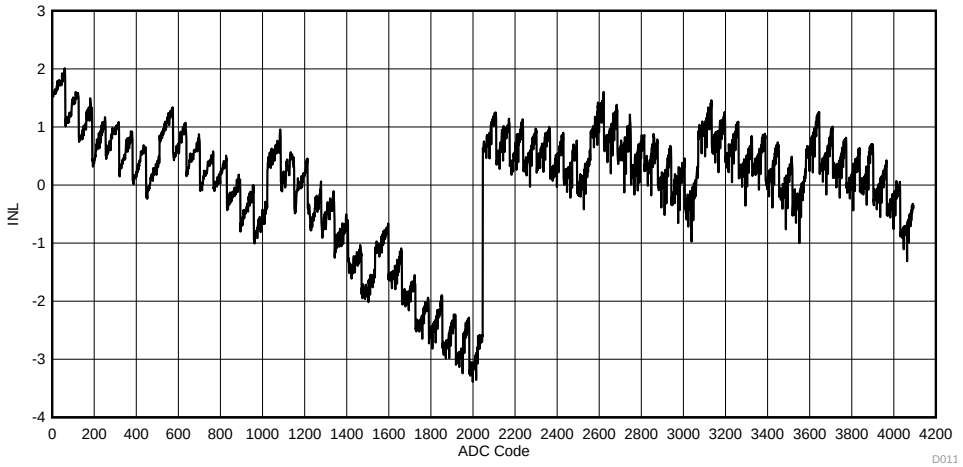

Figure 5-25. SoC ADC INL vs ADC Code (Internal Reference, No Scaling)

Copyright © 2015, Texas Instruments Incorporated

6 Detailed Description

6.1 Overview

The core modules of the CC26xx product family are shown in the *Section 6.2*.

6.2 Functional Block Diagram

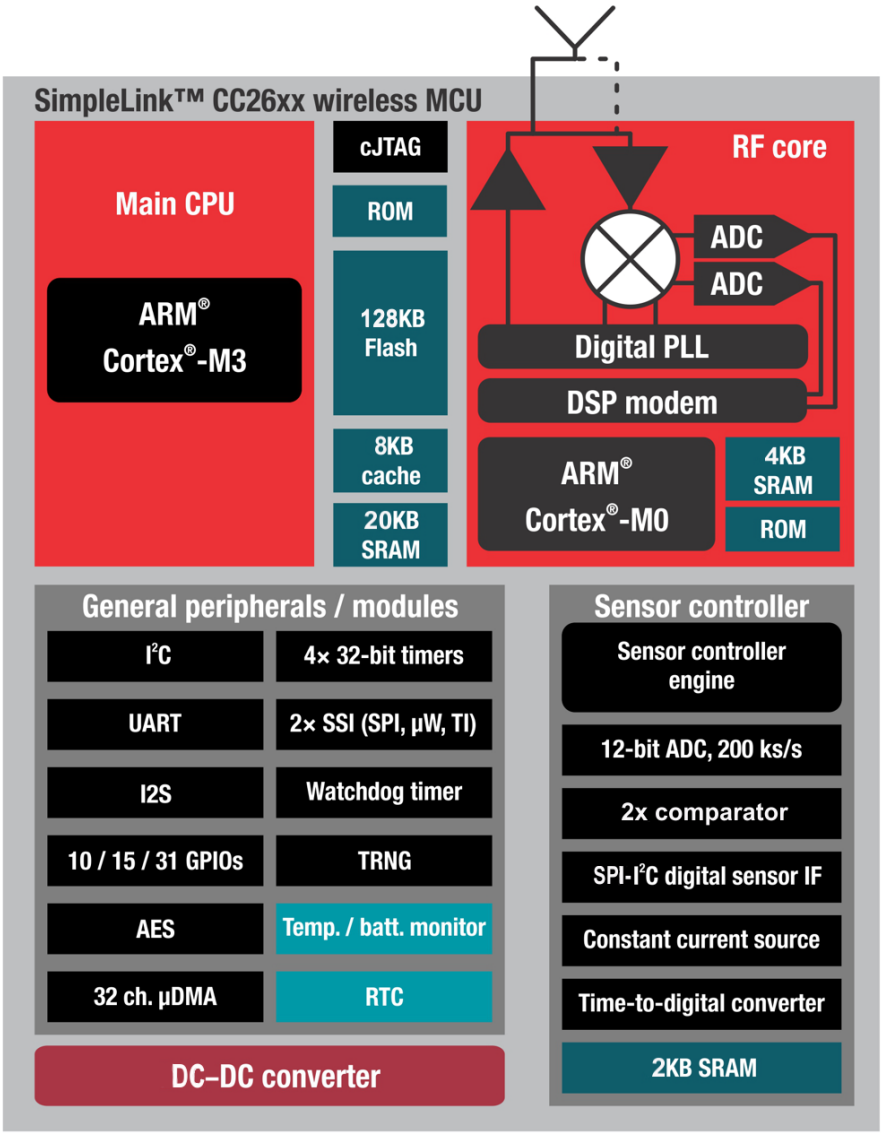

6.3 Main CPU

The SimpleLink CC2650 Wireless MCU contains an ARM Cortex-M3 (CM3) 32-bit CPU, which runs the application and the higher layers of the protocol stack.

The CM3 processor provides a high-performance, low-cost platform that meets the system requirements of minimal memory implementation, and low-power consumption, while delivering outstanding computational performance and exceptional system response to interrupts.

CM3 features include the following:

- 32-bit ARM Cortex-M3 architecture optimized for small-footprint embedded applications
- Outstanding processing performance combined with fast interrupt handling
- ARM Thumb®-2 mixed 16- and 32-bit instruction set delivers the high performance expected of a 32-bit ARM core in a compact memory size usually associated with 8- and 16-bit devices, typically in the range of a few kilobytes of memory for microcontroller-class applications:
  - Single-cycle multiply instruction and hardware divide
  - Atomic bit manipulation (bit-banding), delivering maximum memory use and streamlined peripheral control
  - Unaligned data access, enabling data to be efficiently packed into memory
- Fast code execution permits slower processor clock or increases sleep mode time
- Harvard architecture characterized by separate buses for instruction and data
- Efficient processor core, system, and memories
- Hardware division and fast digital-signal-processing oriented multiply accumulate
- Saturating arithmetic for signal processing
- Deterministic, high-performance interrupt handling for time-critical applications
- Enhanced system debug with extensive breakpoint and trace capabilities
- Serial wire trace reduces the number of pins required for debugging and tracing
- Migration from the ARM7™ processor family for better performance and power efficiency
- Optimized for single-cycle flash memory use
- Ultralow-power consumption with integrated sleep modes
- 1.25 DMIPS per MHz

6.4 RF Core

The RF Core contains an ARM Cortex-M0 processor that interfaces the analog RF and base-band circuitries, handles data to and from the system side, and assembles the information bits in a given packet structure. The RF core offers a high level, command-based API to the main CPU.

The RF core is capable of autonomously handling the time-critical aspects of the radio protocols (802.15.4 RF4CE and ZigBee, *Bluetooth* Low Energy) thus offloading the main CPU and leaving more resources for the user application.

The RF core has a dedicated 4-KB SRAM block and runs initially from separate ROM memory. The ARM Cortex-M0 processor is not programmable by customers.

Copyright © 2015, Texas Instruments Incorporated

6.5 Sensor Controller

The Sensor Controller contains circuitry that can be selectively enabled in standby mode. The peripherals in this domain may be controlled by the Sensor Controller Engine which is a proprietary power-optimized CPU. This CPU can read and monitor sensors or perform other tasks autonomously, thereby significantly reducing power consumption and offloading the main CM3 CPU.

The Sensor Controller is set up using a PC-based configuration tool, called Sensor Controller Studio, and potential use cases may be (but are not limited to):

- Analog sensors using integrated ADC
- Digital sensors using GPIOs, bit-banged I^2C, and SPI
- UART communication for sensor reading or debugging
- Capacitive sensing
- Waveform generation
- Pulse counting
- Keyboard scan
- Quadrature decoder for polling rotation sensors
- Oscillator calibration

NOTE

Texas Instruments provides application examples for some of these use cases, but not for all of them.

The peripherals in the Sensor Controller include the following:

- The low-power clocked comparator can be used to wake the device from any state in which the comparator is active. A configurable internal reference can be used in conjunction with the comparator. The output of the comparator can also be used to trigger an interrupt or the ADC.
- Capacitive sensing functionality is implemented through the use of a constant current source, a time-to-digital converter, and a comparator. The continuous time comparator in this block can also be used as a higher-accuracy alternative to the low-power clocked comparator. The Sensor Controller will take care of baseline tracking, hysteresis, filtering and other related functions.
- The ADC is a 12-bit, 200-ksamples/s ADC with eight inputs and a built-in voltage reference. The ADC can be triggered by many different sources, including timers, I/O pins, software, the analog comparator, and the RTC.
- The Sensor Controller also includes a SPI–I^2C digital interface.
- The analog modules can be connected to up to eight different GPIOs.

The peripherals in the Sensor Controller can also be controlled from the main application processor.

Table 6-1. GPIOs Connected to the Sensor Controller(1)

ANALOG CAPABLE	7 × 7 RGZ DIO NUMBER	5 × 5 RHB DIO NUMBER	4 × 4 RSM DIO NUMBER
Y	30	14	
Y	29	13	
Y	28	12	
Y	27	11	9
Y	26	9	8
Y	25	10	7
Y	24	8	6
Y	23	7	5
N	7	4	2
N	6	3	1
N	5	2	0
N	4	1	
N	3	0	
N	2		
N	1		
N	0		

(1) Depending on the package size, up to 16 pins can be connected to the Sensor Controller. Up to 8 of these pins can be connected to analog modules.

6.6 Memory

The flash memory provides nonvolatile storage for code and data. The flash memory is in-system programmable.

The SRAM (static RAM) can be used for both storage of data and execution of code and is split into two 4-KB blocks and two 6-KB blocks. Retention of the RAM contents in standby mode can be enabled or disabled individually for each block to minimize power consumption. In addition, if flash cache is disabled, the 8-KB cache can be used as a general-purpose RAM.

The ROM provides preprogrammed embedded TI RTOS kernel, Driverlib and lower layer protocol stack software (802.15.4 MAC and *Bluetooth* Low Energy Controller). It also contains a bootloader that can be used to reprogram the device using SPI or UART.

6.7 Debug

The on-chip debug support is done through a dedicated cJTAG (IEEE 1149.7) or JTAG (IEEE 1149.1) interface.

Copyright © 2015, Texas Instruments Incorporated

6.8 Power Management

To minimize power consumption, the CC2650 device supports a number of power modes and power management features (see Table 6-2).

Table 6-2. Power Modes

MODE	SOFTWARE CONFIGURABLE POWER MODES				RESET PIN HELD
	ACTIVE	IDLE	STANDBY	SHUTDOWN	
CPU	Active	Off	Off	Off	Off
Flash	On	Available	Off	Off	Off
SRAM	On	On	On	Off	Off
Radio	Available	Available	Off	Off	Off
Supply System	On	On	Duty Cycled	Off	Off
Current	1.45 mA + 31 µA/MHz	550 µA	1 µA	0.15 µA	0.1 µA
Wake-up Time to CPU Active (1)	–	14 µs	151 µs	1015 µs	1015 µs
Register Retention	Full	Full	Partial	No	No
SRAM Retention	Full	Full	Full	No	No
High-Speed Clock	XOSC_HF or RCOSC_HF	XOSC_HF or RCOSC_HF	Off	Off	Off
Low-Speed Clock	XOSC_LF or RCOSC_LF	XOSC_LF or RCOSC_LF	XOSC_LF or RCOSC_LF	Off	Off
Peripherals	Available	Available	Off	Off	Off
Sensor Controller	Available	Available	Available	Off	Off
Wake up on RTC	Available	Available	Available	Off	Off
Wake up on Pin Edge	Available	Available	Available	Available	Off
Wake up on Reset Pin	Available	Available	Available	Available	Available
Brown Out Detector (BOD)	Active	Active	Duty Cycled (2)	Off	N/A
Power On Reset (POR)	Active	Active	Active	Active	N/A

(1) Not including RTOS overhead
(2) The Brown Out Detector is disabled between recharge periods in STANDBY. Lowering the supply voltage below the BOD threshold between two recharge periods while in STANDBY may cause the BOD to lock the device upon wake-up until a Reset/POR releases it. To avoid this, it is recommended that STANDBY mode is avoided if there is a risk that the supply voltage (VDDS) may drop below the specified operating voltage range. For the same reason, it is also good practice to ensure that a power cycling operation, such as a battery replacement, triggers a Power-on-reset by ensuring that the VDDS decoupling network is fully depleted before applying supply voltage again (for example, inserting new batteries).

In active mode, the application CM3 CPU is actively executing code. Active mode provides normal operation of the processor and all of the peripherals that are currently enabled. The system clock can be any available clock source (see Table 6-2).

In idle mode, all active peripherals can be clocked, but the Application CPU core and memory are not clocked and no code is executed. Any interrupt event will bring the processor back into active mode.

In standby mode, only the always-on domain (AON) is active. An external wake event, RTC event, or sensor-controller event is required to bring the device back to active mode. MCU peripherals with retention do not need to be reconfigured when waking up again, and the CPU continues execution from where it went into standby mode. All GPIOs are latched in standby mode.

In shutdown mode, the device is turned off entirely, including the AON domain and the Sensor Controller. The I/Os are latched with the value they had before entering shutdown mode. A change of state on any I/O pin defined as a *wake from Shutdown pin* wakes up the device and functions as a reset trigger. The CPU can differentiate between a reset in this way, a reset-by-reset pin, or a power-on-reset by reading the reset status register. The only state retained in this mode is the latched I/O state and the Flash memory contents.

Copyright © 2015, Texas Instruments Incorporated

The Sensor Controller is an autonomous processor that can control the peripherals in the Sensor Controller independently of the main CPU, which means that the main CPU does not have to wake up, for example, to execute an ADC sample or poll a digital sensor over SPI. The main CPU saves both current and wake-up time that would otherwise be wasted. The Sensor Controller Studio enables the user to configure the sensor controller and choose which peripherals are controlled and which conditions wake up the main CPU.

6.9 Clock Systems

The CC2650 supports two external and two internal clock sources.

A 24-MHz crystal is required as the frequency reference for the radio. This signal is doubled internally to create a 48-MHz clock.

The 32-kHz crystal is optional. *Bluetooth* low energy requires a slow-speed clock with better than ±500 ppm accuracy if the device is to enter any sleep mode while maintaining a connection. The internal 32-kHz RC oscillator can in some use cases be compensated to meet the requirements. The low-speed crystal oscillator is designed for use with a 32-kHz watch-type crystal.

The internal high-speed oscillator (48-MHz) can be used as a clock source for the CPU subsystem.

The internal low-speed oscillator (32.768-kHz) can be used as a reference if the low-power crystal oscillator is not used.

The 32-kHz clock source can be used as external clocking reference through GPIO.

6.10 General Peripherals and Modules

The I/O controller controls the digital I/O pins and contains multiplexer circuitry to allow a set of peripherals to be assigned to I/O pins in a flexible manner. All digital I/Os are interrupt and wake-up capable, have a programmable pullup and pulldown function and can generate an interrupt on a negative or positive edge (configurable). When configured as an output, pins can function as either push-pull or open-drain. Five GPIOs have high drive capabilities (marked in **bold** in Section 4).

The SSIs are synchronous serial interfaces that are compatible with SPI, MICROWIRE, and Texas Instruments synchronous serial interfaces. The SSIs support both SPI master and slave up to 4 MHz.

The UART implements a universal asynchronous receiver/transmitter function. It supports flexible baud-rate generation up to a maximum of 3 Mbps and is compatible with the *Bluetooth* HCI specifications.

Timer 0 is a general-purpose timer module (GPTM), which provides two 16-bit timers. The GPTM can be configured to operate as a single 32-bit timer, dual 16-bit timers or as a PWM module.

Timer 1, Timer 2, and Timer 3 are also GPTMs. Each of these timers is functionally equivalent to Timer 0.

In addition to these four timers, the RF core has its own timer to handle timing for RF protocols; the RF timer can be synchronized to the RTC.

The I^2C interface is used to communicate with devices compatible with the I^2C standard. The I^2C interface is capable of 100-kHz and 400-kHz operation, and can serve as both I^2C master and I^2C slave.

The TRNG module provides a true, nondeterministic noise source for the purpose of generating keys, initialization vectors (IVs), and other random number requirements. The TRNG is built on 24 ring oscillators that create unpredictable output to feed a complex nonlinear combinatorial circuit.

The watchdog timer is used to regain control if the system fails due to a software error after an external device fails to respond as expected. The watchdog timer can generate an interrupt or a reset when a predefined time-out value is reached.

Copyright © 2015, Texas Instruments Incorporated

The device includes a direct memory access (µDMA) controller. The µDMA controller provides a way to offload data transfer tasks from the CM3 CPU, allowing for more efficient use of the processor and the available bus bandwidth. The µDMA controller can perform transfer between memory and peripherals. The µDMA controller has dedicated channels for each supported on-chip module and can be programmed to automatically perform transfers between peripherals and memory as the peripheral is ready to transfer more data. Some features of the µDMA controller include the following (this is not an exhaustive list):

- Highly flexible and configurable channel operation of up to 32 channels
- Transfer modes:
  - Memory-to-memory
  - Memory-to-peripheral
  - Peripheral-to-memory
  - Peripheral-to-peripheral
- Data sizes of 8, 16, and 32 bits

The AON domain contains circuitry that is always enabled, except for in Shutdown (where the digital supply is off). This circuitry includes the following:

- The RTC can be used to wake the device from any state where it is active. The RTC contains three compare and one capture registers. With software support, the RTC can be used for clock and calendar operation. The RTC is clocked from the 32-kHz RC oscillator or crystal. The RTC can also be compensated to tick at the correct frequency even when the internal 32-kHz RC oscillator is used instead of a crystal.
- The battery monitor and temperature sensor are accessible by software and give a battery status indication as well as a coarse temperature measure.

6.11 System Architecture

Depending on the product configuration, CC26xx can function either as a Wireless Network Processor (WNP—an IC running the wireless protocol stack, with the application running on a separate MCU), or as a System-on-Chip (SoC), with the application and protocol stack running on the ARM CM3 core inside the device.

In the first case, the external host MCU communicates with the device using SPI or UART. In the second case, the application must be written according to the application framework supplied with the wireless protocol stack.

7 Application, Implementation, and Layout

NOTE

Information in the following applications sections is not part of the TI component specification, and TI does not warrant its accuracy or completeness. TI's customers are responsible for determining suitability of components for their purposes. Customers should validate and test their design implementation to confirm system functionality.

7.1 Application Information

Very few external components are required for the operation of the CC2650 device. This section provides some general information about the various configuration options when using the CC2650 in an application, and then shows two examples of application circuits with schematics and layout. Complete reference designs are available in the product folder on www.ti.com. Figure 7-1 shows the various RF front-end configuration options. The RF front end can be used in differential- or single-ended configurations with the options of having internal or external biasing. These options allow for various trade-offs between cost, board space, and RF performance. Differential operation with external bias gives the best performance while single-ended operation with internal bias gives the least amount of external components and the lowest power consumption. Reference designs exist for each of these options.

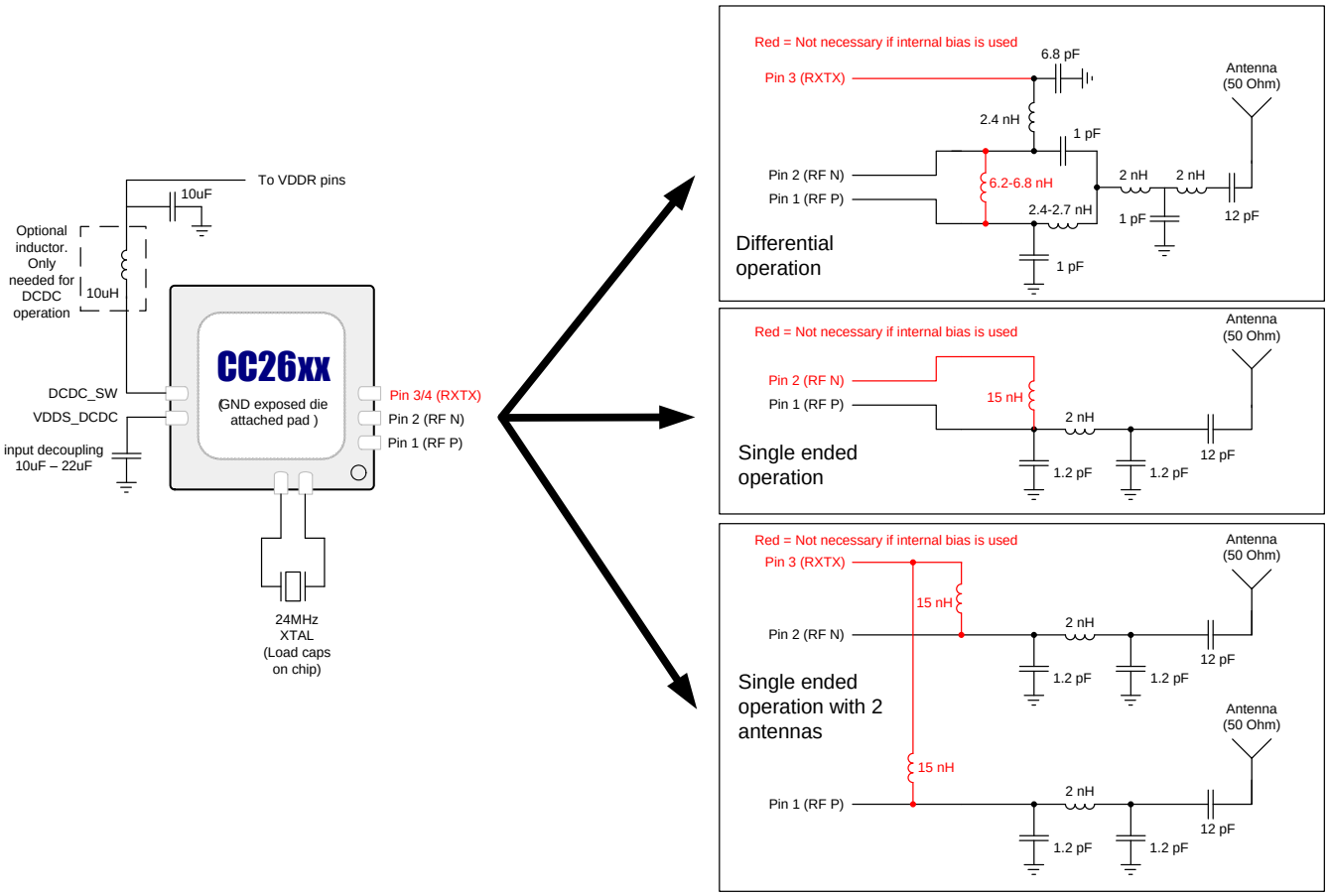

Figure 7-1. CC2650 Application Circuit

Copyright © 2015, Texas Instruments Incorporated

Figure 7-2 shows the various supply voltage configuration options. Not all power supply decoupling capacitors or digital I/Os are shown. Exact pin positions will vary between the different package options. For a detailed overview of power supply decoupling and wiring, see the TI reference designs and the CC26xx technical reference manual (节 8.2).

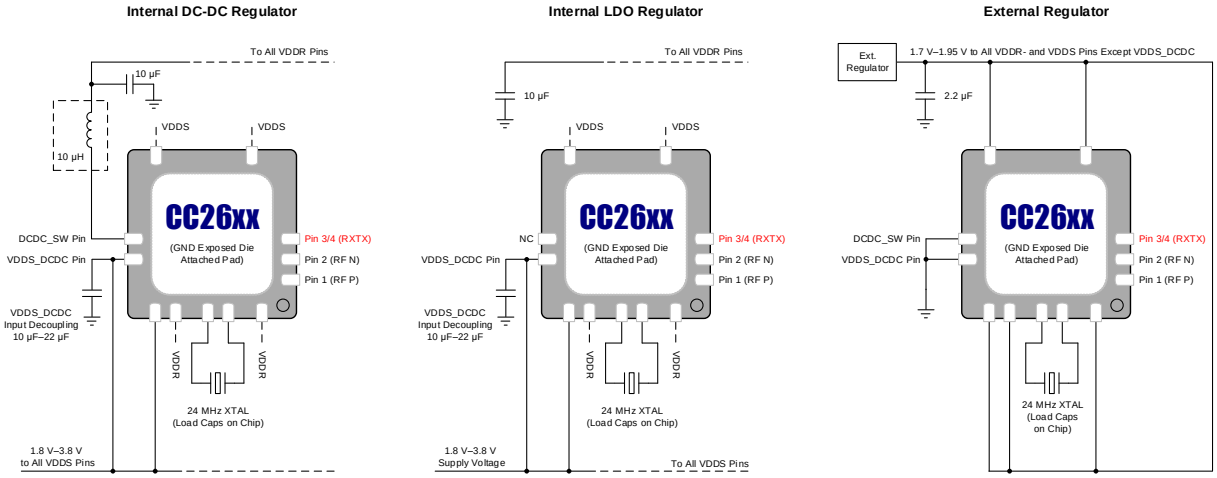

Figure 7-2. Supply Voltage Configurations

7.2 5 × 5 External Differential (5XD) Application Circuit

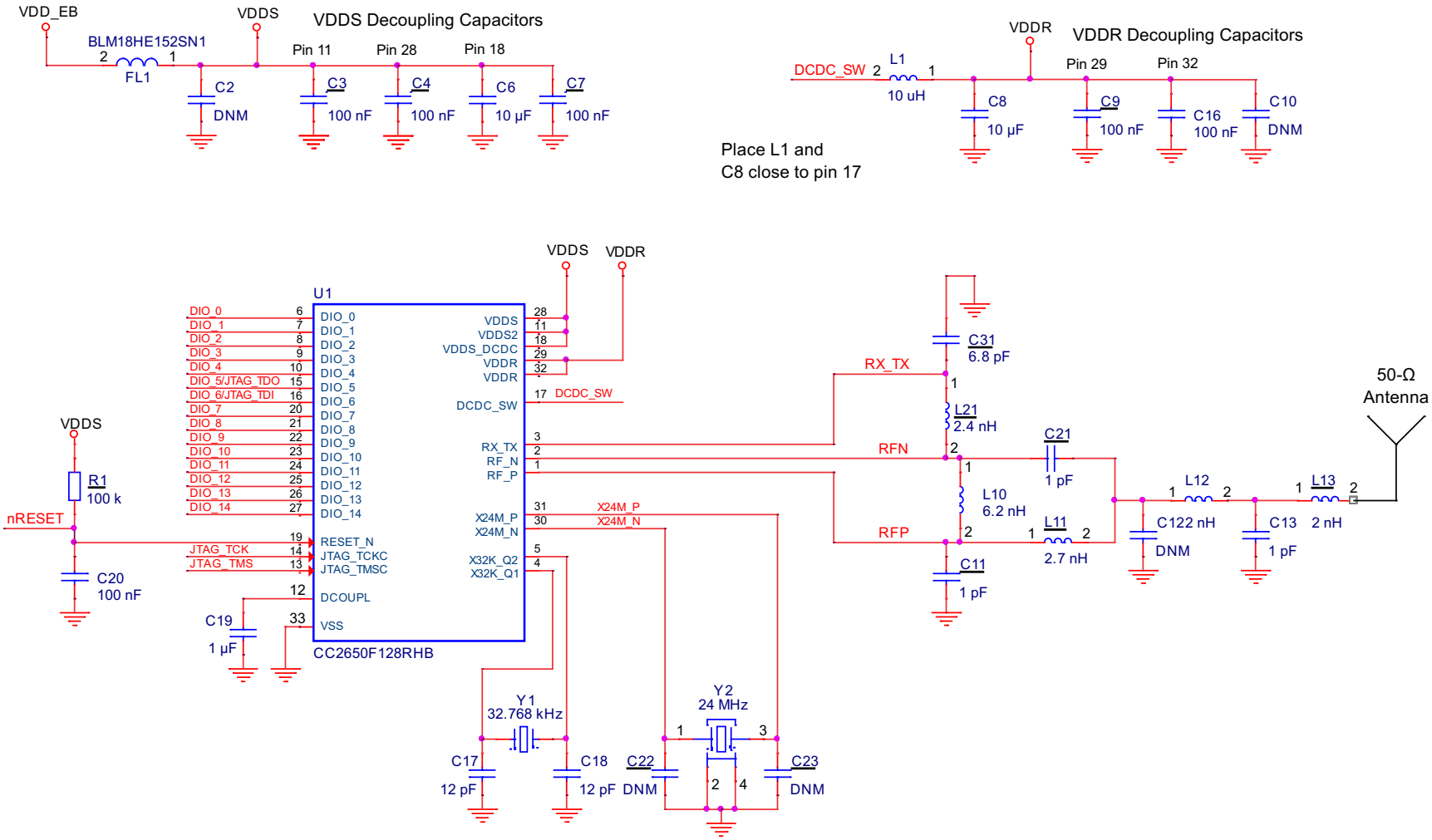

Figure 7-3. 5 × 5 External Differential (5XD) Application Circuit

Copyright © 2015, Texas Instruments Incorporated

7.2.1 Layout

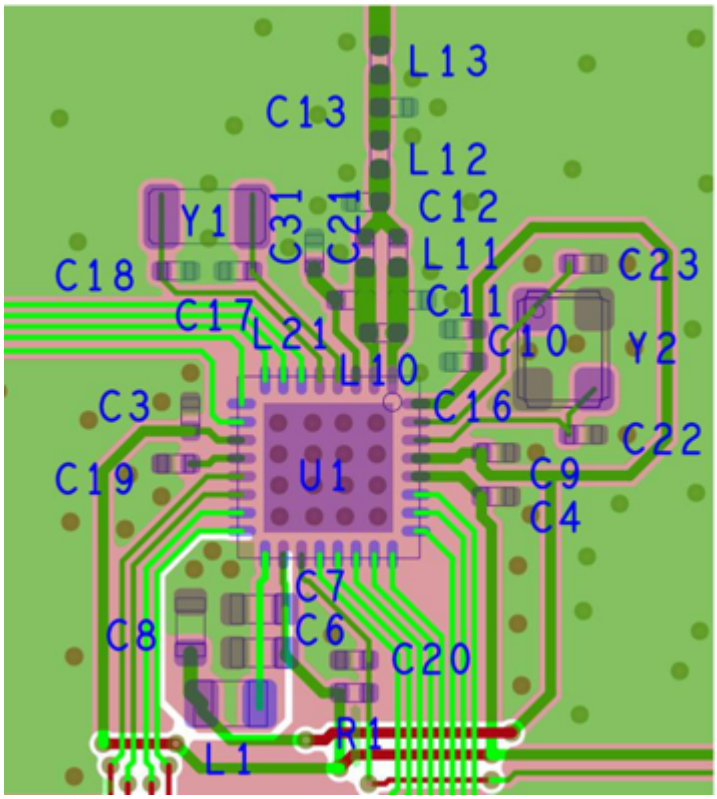

Figure 7-4. 5 × 5 External Differential (5XD) Layout

7.3 4 × 4 External Single-ended (4XS) Application Circuit

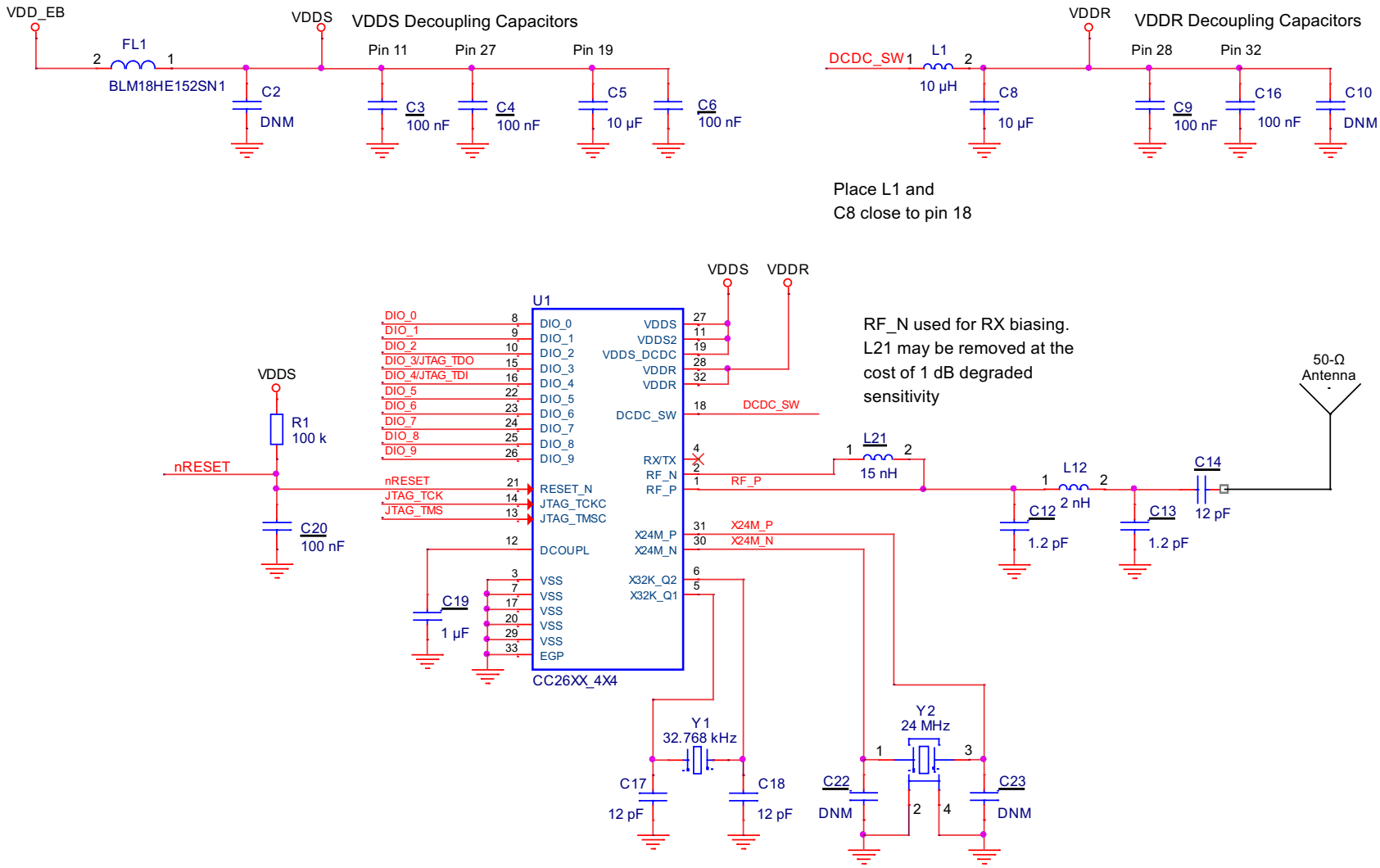

Figure 7-5. 4 × 4 External Single-ended (4XS) Application Circuit

Copyright © 2015, Texas Instruments Incorporated

7.3.1 Layout

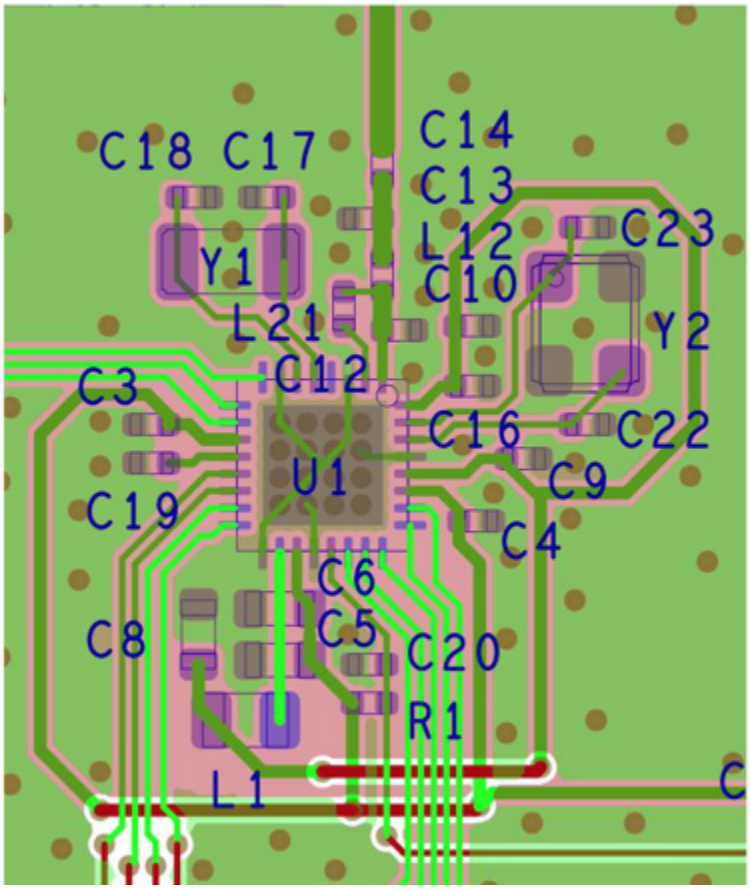

Figure 7-6. 4 × 4 External Single-ended (4XS) Layout

8 器件和文档支持

8.1 器件支持

8.1.1 开发支持

TI 提供大量的开发工具，其中包括评估处理器性能、生成代码、开发算法工具、以及完全集成和调试软件及硬件模块的工具。

以下产品为 CC2650 器件 应用的开发提供支持：

软件工具：

SmartRF Studio 7:

SmartRF Studio 是一款 PC 应用程序，可帮助无线电系统设计人员评估早期设计过程的 RF-IC。

- 测试无线数据包收发功能，连续波收发功能
- 将相关数据写入支持的评估板或调试器，评估定制板上的 RF 性能
- 可以不搭配任何硬件使用，但此时只能生成、编辑并导出无线配置设置
- 可与德州仪器 (TI) CCxxxx 系列 RF-IC 的多款开发套件搭配使用

Sensor Controller Studio：

Sensor Controller Studio 为 CC26xx 传感器控制器提供开发环境。此传感器控制器是 CC26xx 系列中的一款专用功率优化型 CPU，可独立于系统 CPU 状态自主执行简单的后台任务。

- 允许使用 C 语言这类编程语言实现传感器控制器任务算法
- 输出传感器控制器接口驱动程序，其中整合了生成的传感器控制器机械代码和相关定义
- 通过使用集成传感器控制器任务测试和调试功能实现快速开发这有助于实现有效的传感器数据和算法验证可视化。

IDE 和编译器：

Code Composer Studio：

- 带有项目管理工具和编辑器的集成开发环境
- Code Composer Studio (CCS) 6.1 及更高版本内置对 CC26xx 系列器件的支持功能。
- 优先支持的 XDS 调试器：XDS100v3、XDS110 和 XDS200
- 与 TI-RTOS 高度集成，支持 TI-RTOS 对象视图

IAR ARM Embedded Workbench

- 带有项目管理工具和编辑器的集成开发环境
- IAR EWARM 7.30.3 及更高版本内置对 CC26xx 系列器件的支持功能。
- 广泛的调试器支持，支持 XDS100v3、XDS200、IAR I-Jet 和 Segger J-Link
- 带有项目管理工具和编辑器的集成开发环境
- 适用于 TI-RTOS 的 RTOS 插件

要获取有关 CC2650 平台的开发支持工具的完整列表，请访问德州仪器 (TI) 网站 www.ti.com。有关定价和购买信息，请联系最近的 TI 销售办事处或授权分销商。

8.1.2 器件命名规则

为了标明产品开发周期的各个产品阶段，TI 为所有部件号和日期代码添加了前缀。每个器件都具有以下三个前缀/标识中的一个：X、P 或无（无前缀）（例如，CC2650 正在批量生产；因此未分配前缀/标识）。

器件开发进化流程：

X	试验器件不一定代表最终器件的电气规范标准并且不可使用生产组装流程。
P	原型器件不一定是最终芯片模型并且不一定符合最终电气标准规范。
无	完全合格的芯片模型的生产版本。

版权 © 2015, Texas Instruments Incorporated

生产器件已进行完全特性化，并且器件的质量和可靠性已经完全论证。TI 的标准保修证书适用。

预测显示原型器件（X 或者 P）的故障率大于标准生产器件。由于它们的预计的最终使用故障率仍未定义，德州仪器 (TI) 建议不要将这些器件用于任何生产系统。只有合格的生产器件将被使用。

TI 器件的命名规则也包括一个带有器件系列名称的后缀。这个后缀表示封装类型（例如，*RSM*）。

要获得 *CC2650* 器件（采用 *RSM*、*RHB* 或 *RGZ* 封装类型）的订购部件号，请参见本文档的封装选项目录（TI 网站 www.ti.com），或者联系您的 TI 销售代表。

8.2 文档支持

以下文档介绍 CC2650。www.ti.com.cn 网站上提供了这些文档的副本。

SWCU117 *《CC26xx SimpleLink™ 无线 MCU 技术参考手册》*

SWRZ058 *《CC26xx SimpleLink™ 无线 MCU 勘误表》*

8.3 社区资源

下列链接提供到 TI 社区资源的连接。 链接的内容由各个分销商"按照原样"提供。 这些内容并不构成 TI 技术规范和标准且不一定反映 TI 的观点；请见 TI 的使用条款。

TI E2E™ 在线社区 ***TI 工程师对工程师 (E2E) 社区。*** 此社区的创建目的是为了促进工程师之间协作。 在 e2e.ti.com 中，您可以咨询问题、共享知识、探索思路，在同领域工程师的帮助下解决问题。

德州仪器 **(TI)** 嵌入式处理器维基网站 ***德州仪器 (TI) 嵌入式处理器维基网站。*** 此网站的建立是为了帮助开发人员从德州仪器 (TI) 的嵌入式处理器入门并且也为了促进与这些器件相关的硬件和软件的总体知识的创新和增长。

8.4 德州仪器 (TI) 低功耗射频网站

德州仪器 (TI) 的低功耗射频网站提供所有最新产品、应用和设计笔记、FAQ 部分、新闻资讯以及活动更新。请访问 www.ti.com/lprf。

8.5 低功耗射频在线社区

- 论坛、视频和博客
- 射频设计帮助
- E2E 交流互动

访问 www.ti.com/lprf-forum 立即体验。

8.6 德州仪器 (TI) 低功耗射频开发者网络

德州仪器 (TI) 建立了一个大型低功耗射频开发合作伙伴网络，帮助客户加快应用开发。此网络中包括推荐的公司、射频顾问和独立设计工作室，他们可提供一系列硬件模块产品和设计服务，其中包括：

- 射频电路、低功耗射频和 ZigBee 设计服务
- 低功耗射频和 ZigBee 模块解决方案以及开发工具
- 射频认证服务和射频电路制造

如果需要有关模块、工程服务或开发工具的帮助：

请搜索低功耗射频开发者网络查找适合的合作伙伴。www.ti.com/lprfnetwork

8.7 低功耗射频电子新闻简报

通过低功耗射频电子新闻简报，您能够了解到最新的产品、新闻稿、开发者相关新闻以及关于德州仪器 (TI) 低功耗射频产品其它新闻和活动。低功耗射频电子新闻简报文章包含可获取更多在线信息的链接。

访问：www.ti.com/lprfnewsletter 立即注册

版权 © 2015, Texas Instruments Incorporated

8.8 其他信息

德州仪器 (TI) 为工业和消费类应用中所使用的专有应用和标准无线 应用 提供各种经济实用的低功耗射频 解决方案。其中包括适用于 1GHz 以下频段和 2.4GHz 频段的射频收发器、射频发送器、射频前端和片上系统以及各种软件解决方案。

此外，德州仪器 (TI) 还提供广泛的相关支持，例如开发工具、技术文档、参考设计、应用专业技术、客户支持、第三方服务以及大学计划。

低功耗射频 E2E 在线社区设有技术支持论坛并提供视频和博客，您有机会在此与全球同领域工程师交流互动。

凭借丰富的供选产品解决方案、可实现的最终应用以及广泛的技术支持，德州仪器 (TI) 能够为您提供最全面的低功耗射频产品组合。

8.9 商标

SimpleLink, SmartRF, Code Composer Studio, E2E are trademarks of Texas Instruments.
ARM7 is a trademark of ARM Limited (or its subsidiaries).
ARM, Cortex, ARM Thumb are registered trademarks of ARM Limited (or its subsidiaries).
Bluetooth is a registered trademark of Bluetooth SIG, Inc.
CoreMark is a registered trademark of Embedded Microprocessor Benchmark Consortium.
IAR Embedded Workbench is a registered trademark of IAR Systems AB.
IEEE Std 1241 is a trademark of Institute of Electrical and Electronics Engineers, Incorporated.
ZigBee is a registered trademark of ZigBee Alliance, Inc.

8.10 静电放电警告

ESD 可能会损坏该集成电路。德州仪器 (TI) 建议通过适当的预防措施处理所有集成电路。如果不遵守正确的处理措施和安装程序，可能会损坏集成电路。

ESD 的损坏小至导致微小的性能降级，大至整个器件故障。 精密的集成电路可能更容易受到损坏，这是因为非常细微的参数更改都可能会导致器件与其发布的规格不相符。

8.11 Export Control Notice

Recipient agrees to not knowingly export or re-export, directly or indirectly, any product or technical data (as defined by the U.S., EU, and other Export Administration Regulations) including software, or any controlled product restricted by other applicable national regulations, received from Disclosing party under this Agreement, or any direct product of such technology, to any destination to which such export or re-export is restricted or prohibited by U.S. or other applicable laws, without obtaining prior authorization from U.S. Department of Commerce and other competent Government authorities to the extent required by those laws.

8.12 Glossary

SLYZ022 — *TI Glossary*.

This glossary lists and explains terms, acronyms and definitions.

9 机械、封装和可订购信息

9.1 封装信息

以下页中包括机械、封装和可订购信息。这些信息是针对指定器件可提供的最新数据。这些数据会在无通知且不对本文档进行修订的情况下发生改变。欲获得该数据表的浏览器版本，请查阅左侧的导航栏。

PACKAGING INFORMATION

Orderable part number	Status (1)	Material type (2)	Package | Pins	Package qty | Carrier	RoHS (3)	Lead finish/ Ball material (4)	MSL rating/ Peak reflow (5)	Op temp (°C)	Part marking (6)
CC2650F128RGZR	Active	Production	VQFN (RGZ) | 48	2500 | LARGE T&R	Yes	NIPDAU | NIPDAUAG	Level-3-260C-168 HR	-40 to 85	CC2650 F128
CC2650F128RGZR.B	Active	Production	VQFN (RGZ) | 48	2500 | LARGE T&R	Yes	NIPDAU	Level-3-260C-168 HR	-40 to 85	CC2650 F128
CC2650F128RGZT	Active	Production	VQFN (RGZ) | 48	250 | SMALL T&R	Yes	NIPDAU | NIPDAUAG	Level-3-260C-168 HR	-40 to 85	CC2650 F128
CC2650F128RGZT.B	Active	Production	VQFN (RGZ) | 48	250 | SMALL T&R	Yes	NIPDAU	Level-3-260C-168 HR	-40 to 85	CC2650 F128
CC2650F128RHBR	Active	Production	VQFN (RHB) | 32	3000 | LARGE T&R	Yes	NIPDAU | SN | NIPDAUAG	Level-3-260C-168 HR	-40 to 85	CC2650 F128
CC2650F128RHBR.B	Active	Production	VQFN (RHB) | 32	3000 | LARGE T&R	Yes	SN	Level-3-260C-168 HR	-40 to 85	CC2650 F128
CC2650F128RHBT	Active	Production	VQFN (RHB) | 32	250 | SMALL T&R	Yes	NIPDAU | SN | NIPDAUAG	Level-3-260C-168 HR	-40 to 85	CC2650 F128
CC2650F128RHBT.B	Active	Production	VQFN (RHB) | 32	250 | SMALL T&R	Yes	SN	Level-3-260C-168 HR	-40 to 85	CC2650 F128
CC2650F128RSMR	Active	Production	VQFN (RSM) | 32	3000 | LARGE T&R	Yes	NIPDAU | SN | NIPDAUAG	Level-3-260C-168 HR	-40 to 85	CC2650 F128
CC2650F128RSMR.B	Active	Production	VQFN (RSM) | 32	3000 | LARGE T&R	Yes	NIPDAU	Level-3-260C-168 HR	-40 to 85	CC2650 F128
CC2650F128RSMT	Active	Production	VQFN (RSM) | 32	250 | SMALL T&R	Yes	NIPDAU | SN | NIPDAUAG	Level-3-260C-168 HR	-40 to 85	CC2650 F128
CC2650F128RSMT.B	Active	Production	VQFN (RSM) | 32	250 | SMALL T&R	Yes	NIPDAU	Level-3-260C-168 HR	-40 to 85	CC2650 F128

(1) **Status:** For more details on status, see our product life cycle.

(2) **Material type:** When designated, preproduction parts are prototypes/experimental devices, and are not yet approved or released for full production. Testing and final process, including without limitation quality assurance, reliability performance testing, and/or process qualification, may not yet be complete, and this item is subject to further changes or possible discontinuation. If available for ordering, purchases will be subject to an additional waiver at checkout, and are intended for early internal evaluation purposes only. These items are sold without warranties of any kind.

(3) **RoHS values:** Yes, No, RoHS Exempt. See the TI RoHS Statement for additional information and value definition.

(4) **Lead finish/Ball material:** Parts may have multiple material finish options. Finish options are separated by a vertical ruled line. Lead finish/Ball material values may wrap to two lines if the finish value exceeds the maximum column width.

(5) **MSL rating/Peak reflow:** The moisture sensitivity level ratings and peak solder (reflow) temperatures. In the event that a part has multiple moisture sensitivity ratings, only the lowest level per JEDEC standards is shown. Refer to the shipping label for the actual reflow temperature that will be used to mount the part to the printed circuit board.

(6) **Part marking:** There may be an additional marking, which relates to the logo, the lot trace code information, or the environmental category of the part.

Multiple part markings will be inside parentheses. Only one part marking contained in parentheses and separated by a "~" will appear on a part. If a line is indented then it is a continuation of the previous line and the two combined represent the entire part marking for that device.

Important Information and Disclaimer: The information provided on this page represents TI's knowledge and belief as of the date that it is provided. TI bases its knowledge and belief on information provided by third parties, and makes no representation or warranty as to the accuracy of such information. Efforts are underway to better integrate information from third parties. TI has taken and continues to take reasonable steps to provide representative and accurate information but may not have conducted destructive testing or chemical analysis on incoming materials and chemicals. TI and TI suppliers consider certain information to be proprietary, and thus CAS numbers and other limited information may not be available for release.

In no event shall TI's liability arising out of such information exceed the total purchase price of the TI part(s) at issue in this document sold by TI to Customer on an annual basis.

TAPE AND REEL INFORMATION

REEL DIMENSIONS

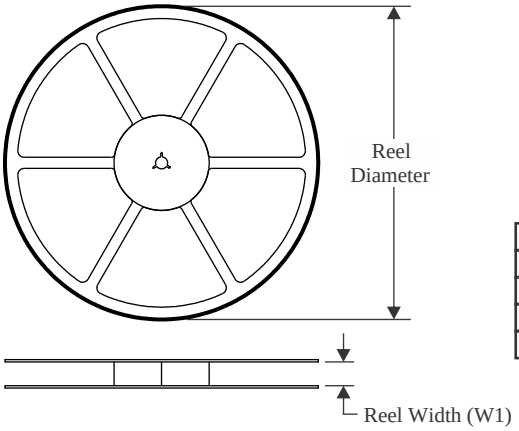

TAPE DIMENSIONS

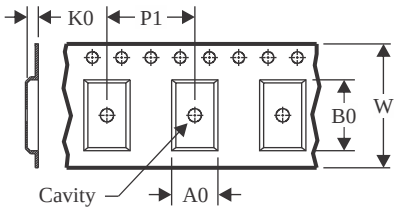

A0	Dimension designed to accommodate the component width
B0	Dimension designed to accommodate the component length
K0	Dimension designed to accommodate the component thickness
W	Overall width of the carrier tape
P1	Pitch between successive cavity centers

QUADRANT ASSIGNMENTS FOR PIN 1 ORIENTATION IN TAPE

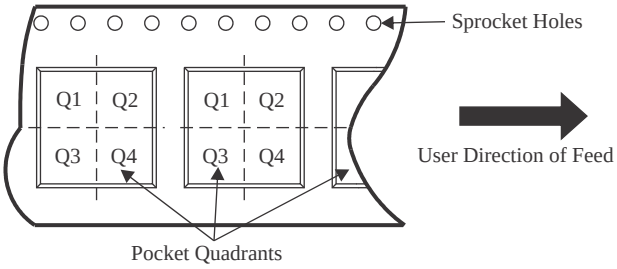

*All dimensions are nominal

Device	Package Type	Package Drawing	Pins	SPQ	Reel Diameter (mm)	Reel Width W1 (mm)	A0 (mm)	B0 (mm)	K0 (mm)	P1 (mm)	W (mm)	Pin1 Quadrant
CC2650F128RGZR	VQFN	RGZ	48	2500	330.0	16.4	7.3	7.3	1.1	12.0	16.0	Q2
CC2650F128RGZT	VQFN	RGZ	48	250	180.0	16.4	7.3	7.3	1.1	12.0	16.0	Q2
CC2650F128RHBR	VQFN	RHB	32	3000	330.0	12.4	5.3	5.3	1.1	8.0	12.0	Q2
CC2650F128RHBR	VQFN	RHB	32	3000	330.0	12.4	5.3	5.3	1.1	8.0	12.0	Q2
CC2650F128RHBT	VQFN	RHB	32	250	180.0	12.4	5.3	5.3	1.1	8.0	12.0	Q2
CC2650F128RSMR	VQFN	RSM	32	3000	330.0	12.4	4.25	4.25	1.15	8.0	12.0	Q2
CC2650F128RSMT	VQFN	RSM	32	250	180.0	12.4	4.25	4.25	1.15	8.0	12.0	Q2

TAPE AND REEL BOX DIMENSIONS

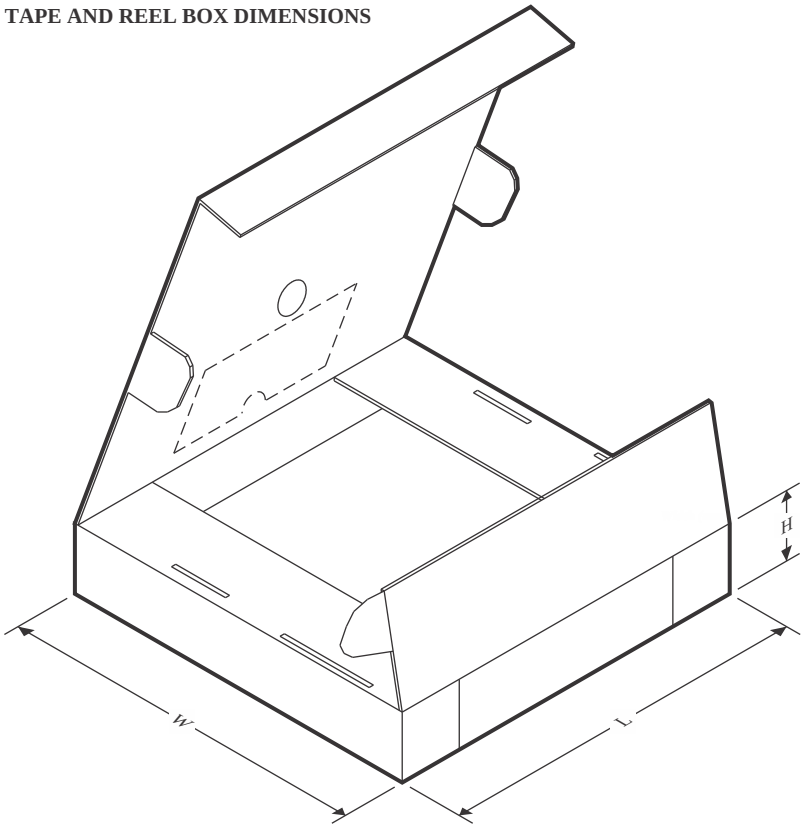

*All dimensions are nominal

Device	Package Type	Package Drawing	Pins	SPQ	Length (mm)	Width (mm)	Height (mm)
CC2650F128RGZR	VQFN	RGZ	48	2500	367.0	367.0	38.0
CC2650F128RGZT	VQFN	RGZ	48	250	210.0	185.0	35.0
CC2650F128RHBR	VQFN	RHB	32	3000	346.0	346.0	33.0
CC2650F128RHBR	VQFN	RHB	32	3000	360.0	360.0	36.0
CC2650F128RHBT	VQFN	RHB	32	250	210.0	185.0	35.0
CC2650F128RSMR	VQFN	RSM	32	3000	360.0	360.0	36.0
CC2650F128RSMT	VQFN	RSM	32	250	210.0	185.0	35.0

TRAY

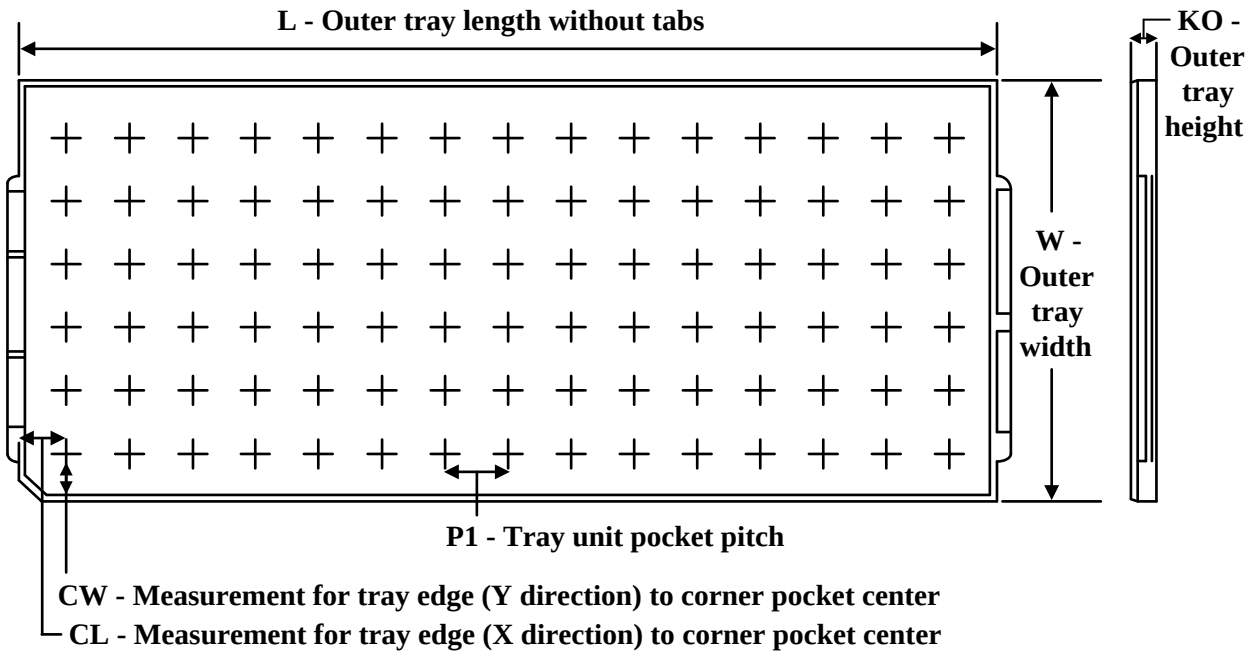

Chamfer on Tray corner indicates Pin 1 orientation of packed units.

*All dimensions are nominal

Device	Package Name	Package Type	Pins	SPQ	Unit array matrix	Max temperature (°C)	L (mm)	W (mm)	K0 (µm)	P1 (mm)	CL (mm)	CW (mm)
CC2650F128RSMR	RSM	VQFN	32	3000	14 x 35	150	315	135.9	7620	8.8	7.9	8.15
CC2650F128RSMR.B	RSM	VQFN	32	3000	14 x 35	150	315	135.9	7620	8.8	7.9	8.15
CC2650F128RSMT	RSM	VQFN	32	250	14 x 35	150	315	135.9	7620	8.8	7.9	8.15
CC2650F128RSMT	RSM	VQFN	32	250	14 x 35	150	315	135.9	7620	8.8	7.9	8.15
CC2650F128RSMT.B	RSM	VQFN	32	250	14 x 35	150	315	135.9	7620	8.8	7.9	8.15
CC2650F128RSMT.B	RSM	VQFN	32	250	14 x 35	150	315	135.9	7620	8.8	7.9	8.15

GENERIC PACKAGE VIEW

RGZ 48

VQFN - 1 mm max height

7 x 7, 0.5 mm pitch

PLASTIC QUADFLAT PACK- NO LEAD

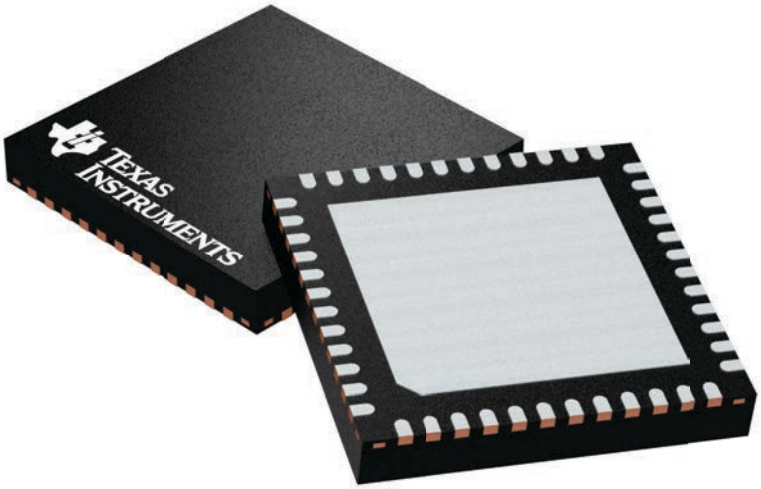

Images above are just a representation of the package family, actual package may vary.
Refer to the product data sheet for package details.

4224671/A

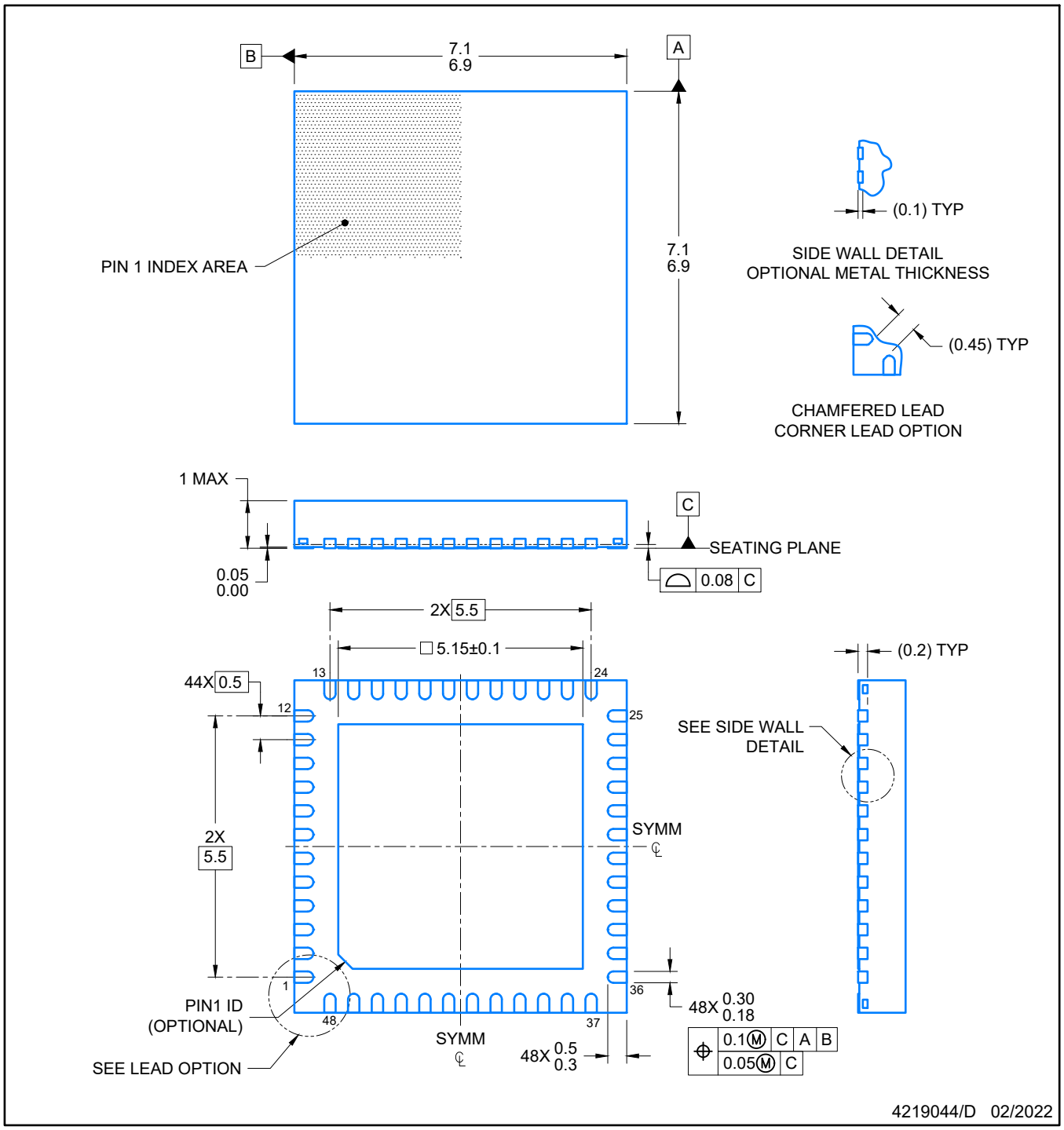

NOTES:

1. All linear dimensions are in millimeters. Any dimensions in parenthesis are for reference only. Dimensioning and tolerancing per ASME Y14.5M.
2. This drawing is subject to change without notice.
3. The package thermal pad must be soldered to the printed circuit board for optimal thermal and mechanical performance.

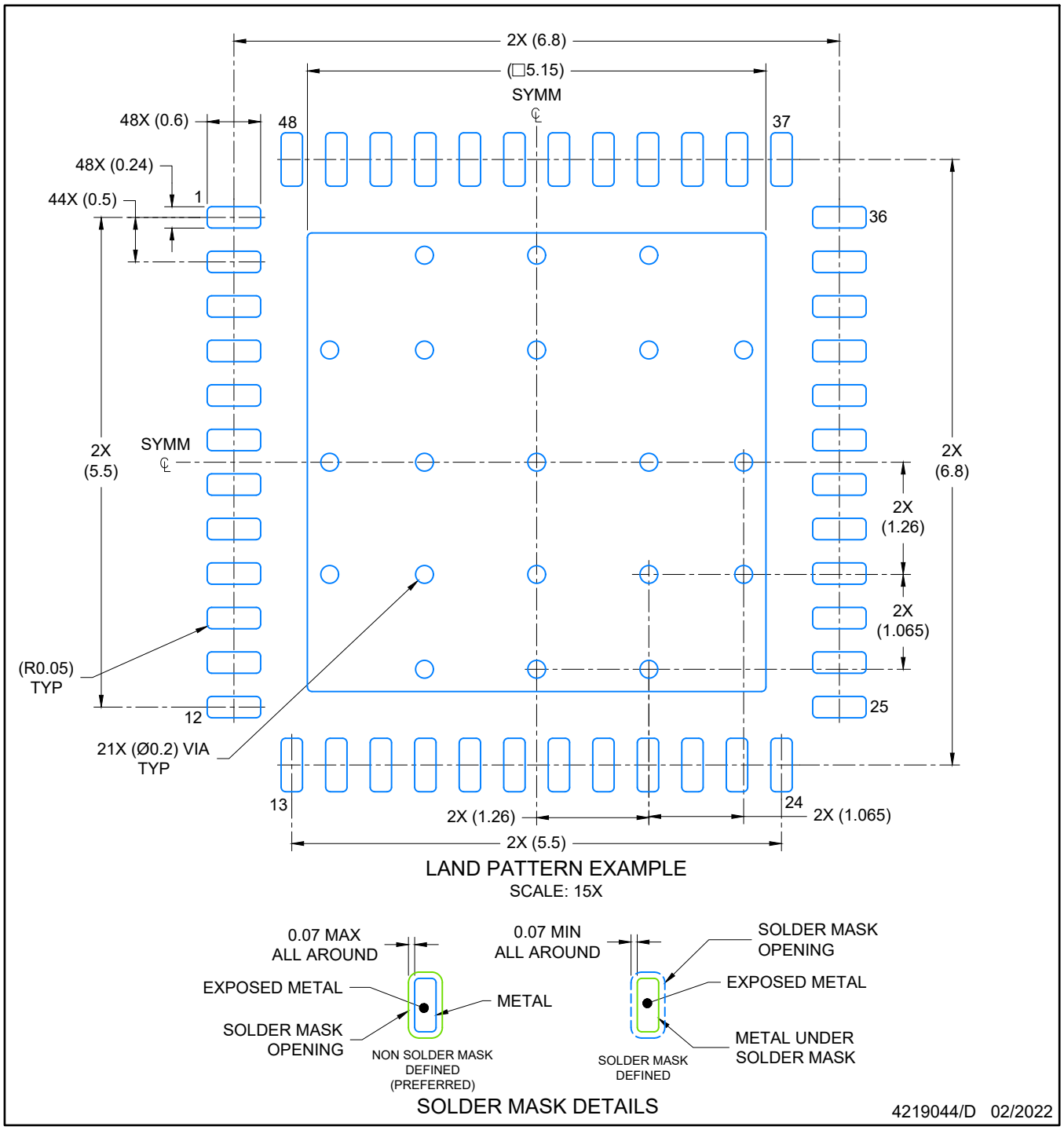

NOTES: (continued)

4. This package is designed to be soldered to a thermal pad on the board. For more information, see Texas Instruments literature number SLUA271 (www.ti.com/lit/slua271).
5. Vias are optional depending on application, refer to device data sheet. If any vias are implemented, refer to their locations shown on this view. It is recommended that vias under paste be filled, plugged or tented.

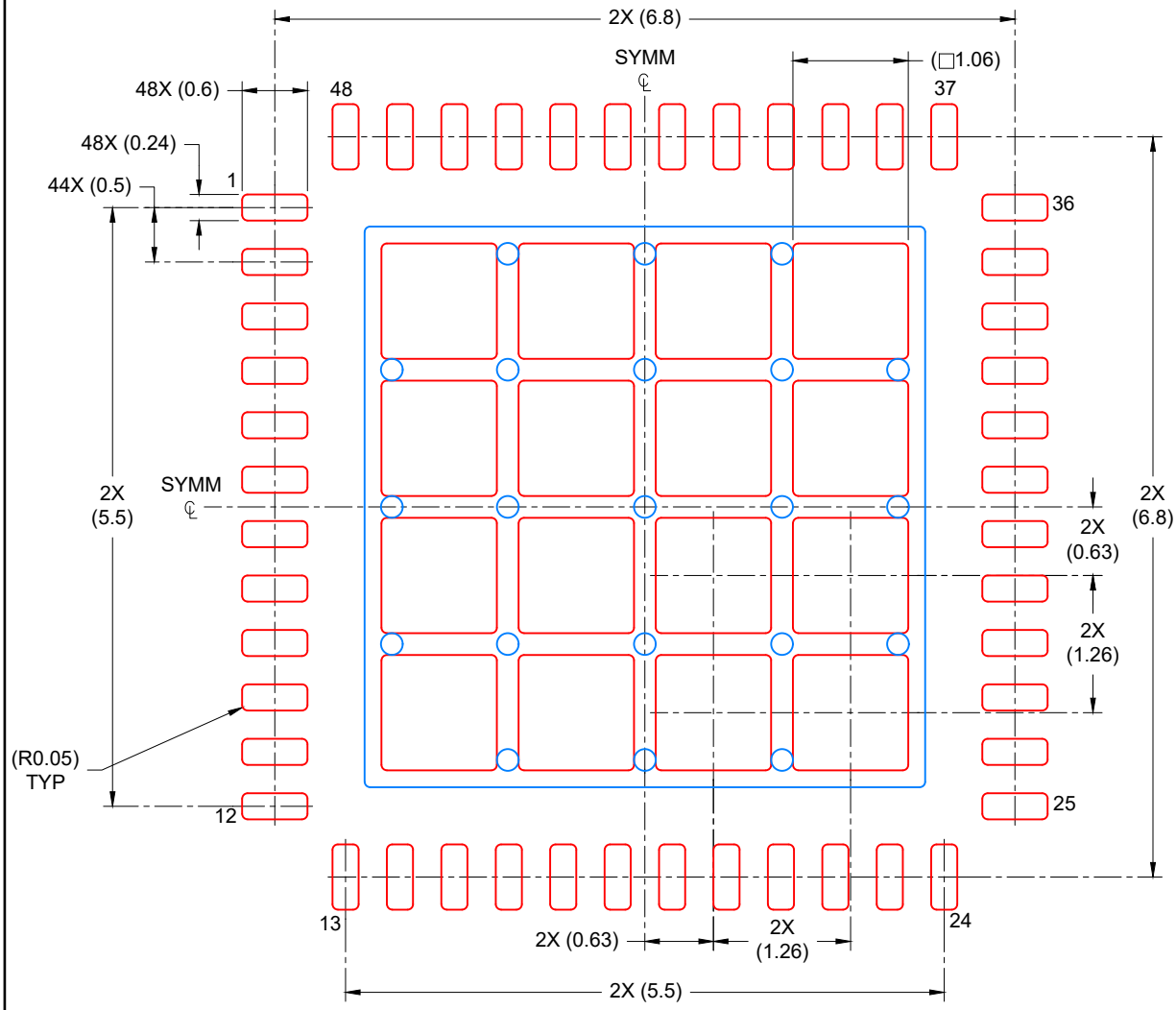

SOLDER PASTE EXAMPLE
BASED ON 0.125 mm THICK STENCIL

EXPOSED PAD
67% PRINTED COVERAGE BY AREA
SCALE: 15X

4219044/D 02/2022

NOTES: (continued)

6. Laser cutting apertures with trapezoidal walls and rounded corners may offer better paste release. IPC-7525 may have alternate design recommendations.

GENERIC PACKAGE VIEW

RSM 32

VQFN - 1 mm max height

4 x 4, 0.4 mm pitch

PLASTIC QUAD FLATPACK - NO LEAD

This image is a representation of the package family, actual package may vary.
Refer to the product data sheet for package details.

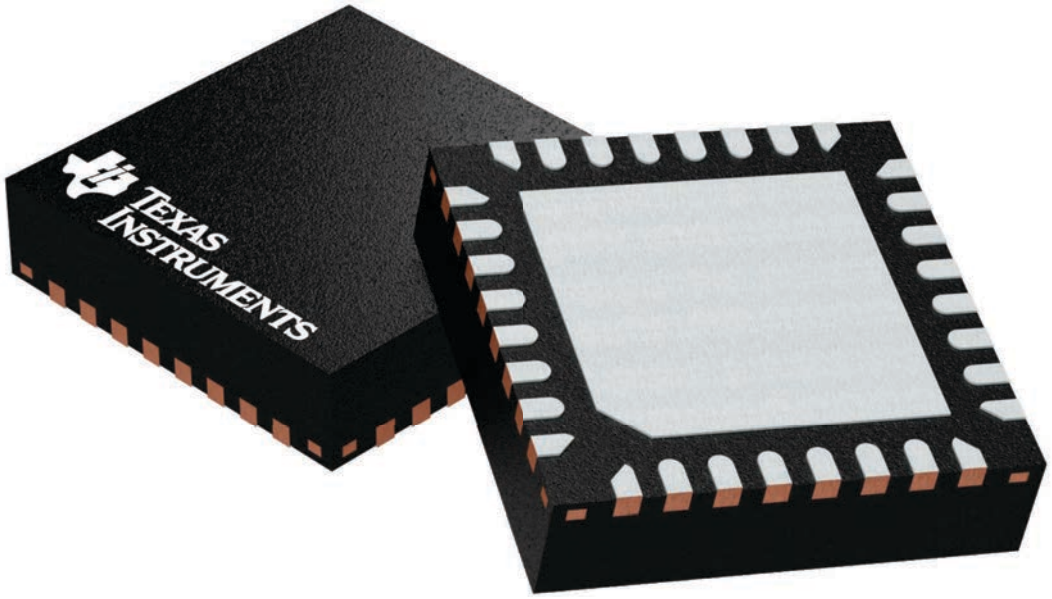

4224982/A

RSM0032B

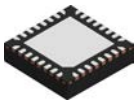

PACKAGE OUTLINE

VQFN - 1 mm max height

PLASTIC QUAD FLATPACK - NO LEAD

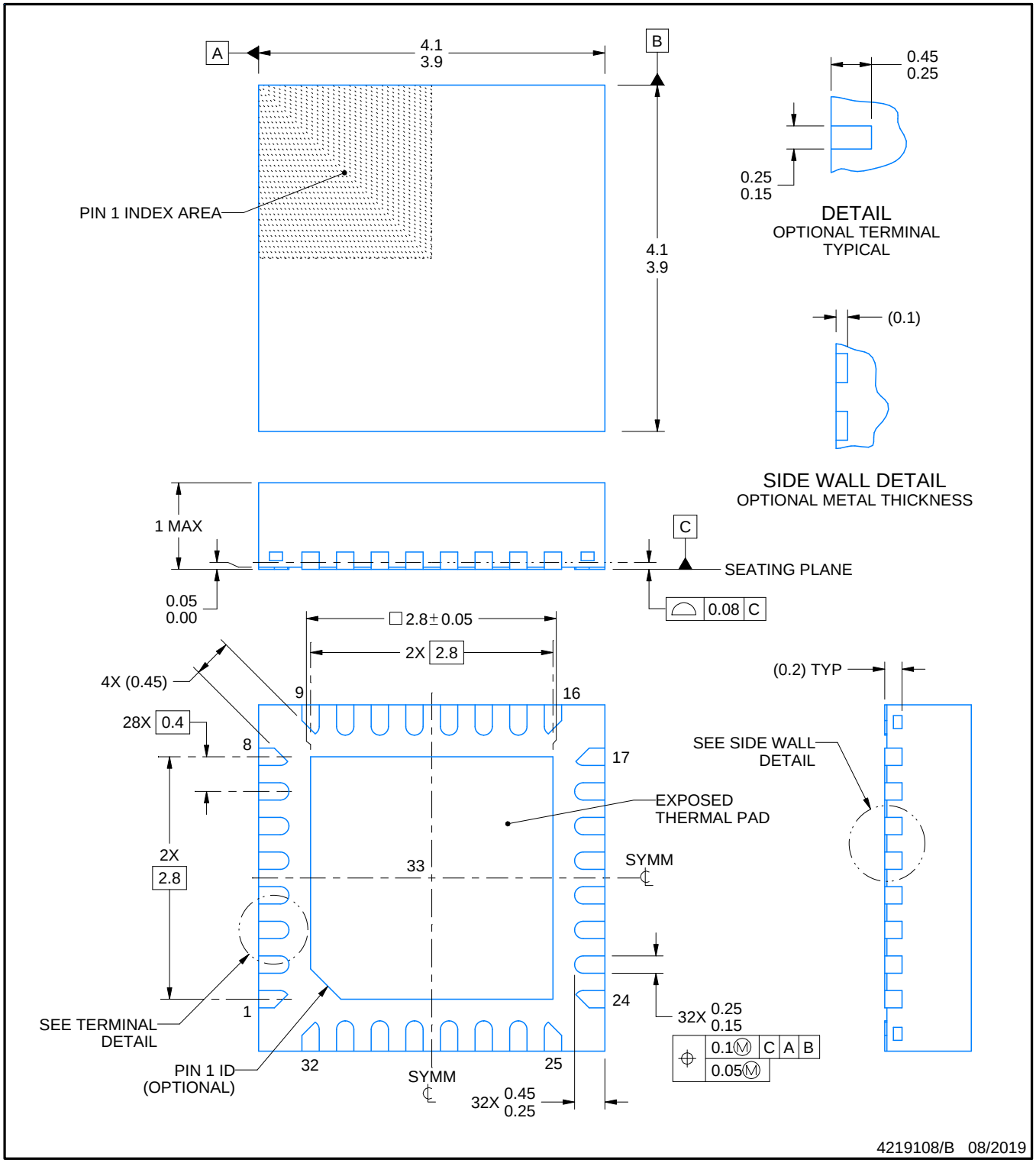

NOTES:

1. All linear dimensions are in millimeters. Any dimensions in parenthesis are for reference only. Dimensioning and tolerancing per ASME Y14.5M.
2. This drawing is subject to change without notice.
3. The package thermal pad must be soldered to the printed circuit board for thermal and mechanical performance.

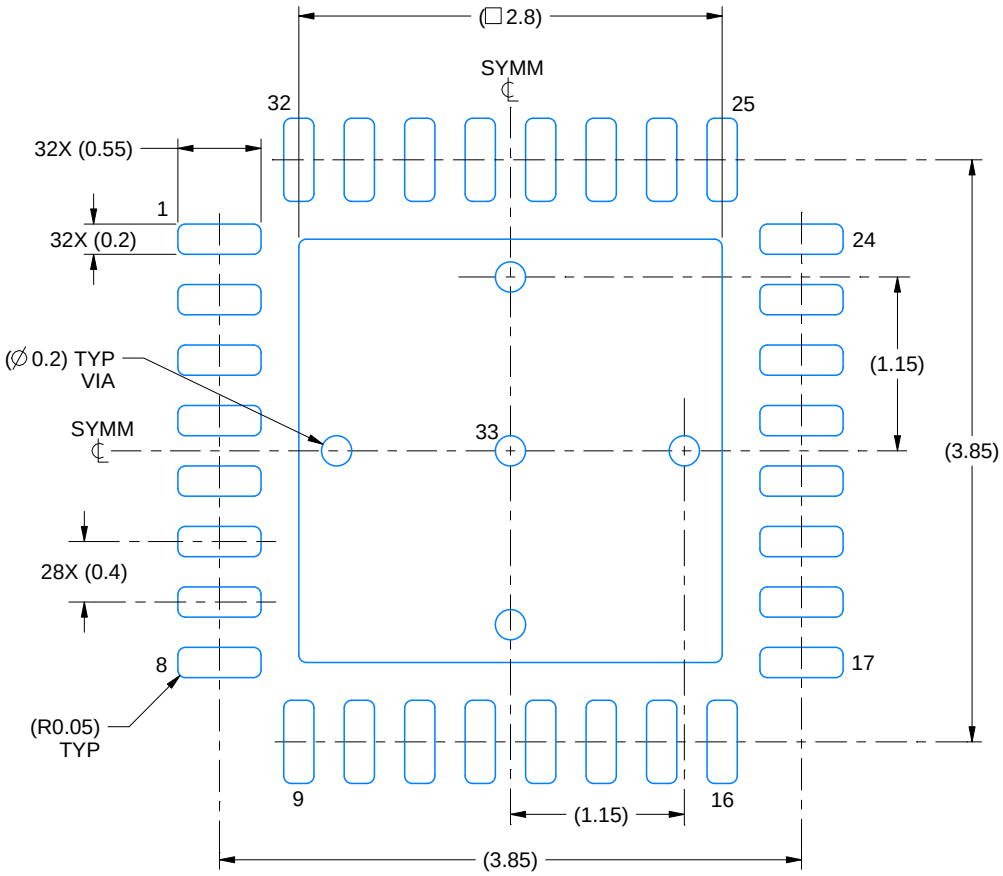

LAND PATTERN EXAMPLE
EXPOSED METAL SHOWN
SCALE:20X

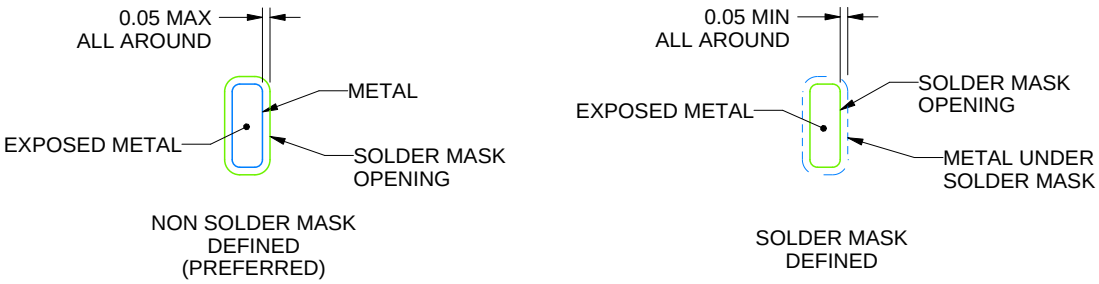

SOLDER MASK DETAILS

4219108/B 08/2019

NOTES: (continued)

4. This package is designed to be soldered to a thermal pad on the board. For more information, see Texas Instruments literature number SLUA271 (www.ti.com/lit/slua271).
5. Vias are optional depending on application, refer to device data sheet. If any vias are implemented, refer to their locations shown on this view. It is recommended that vias under paste be filled, plugged or tented.

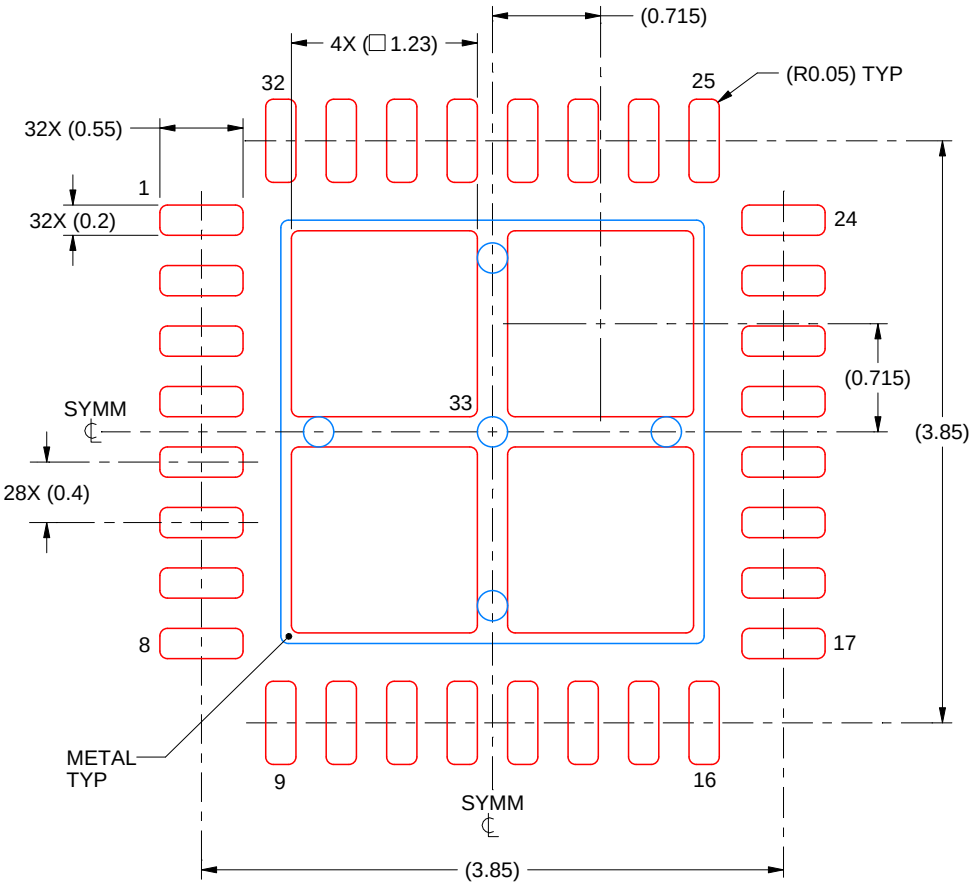

SOLDER PASTE EXAMPLE
BASED ON 0.1 mm THICK STENCIL

EXPOSED PAD 33:
77% PRINTED SOLDER COVERAGE BY AREA UNDER PACKAGE
SCALE:20X

4219108/B 08/2019

NOTES: (continued)

6. Laser cutting apertures with trapezoidal walls and rounded corners may offer better paste release. IPC-7525 may have alternate design recommendations.

GENERIC PACKAGE VIEW

RHB 32

VQFN - 1 mm max height

5 x 5, 0.5 mm pitch

PLASTIC QUAD FLATPACK - NO LEAD

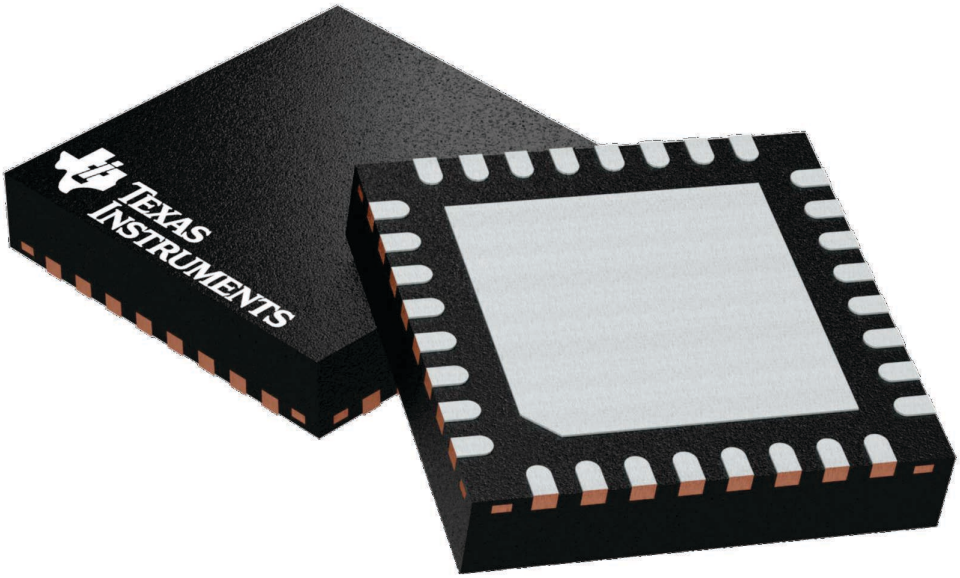

Images above are just a representation of the package family, actual package may vary.
Refer to the product data sheet for package details.

4224745/A

RHB0032E

PACKAGE OUTLINE

VQFN - 1 mm max height

PLASTIC QUAD FLATPACK - NO LEAD

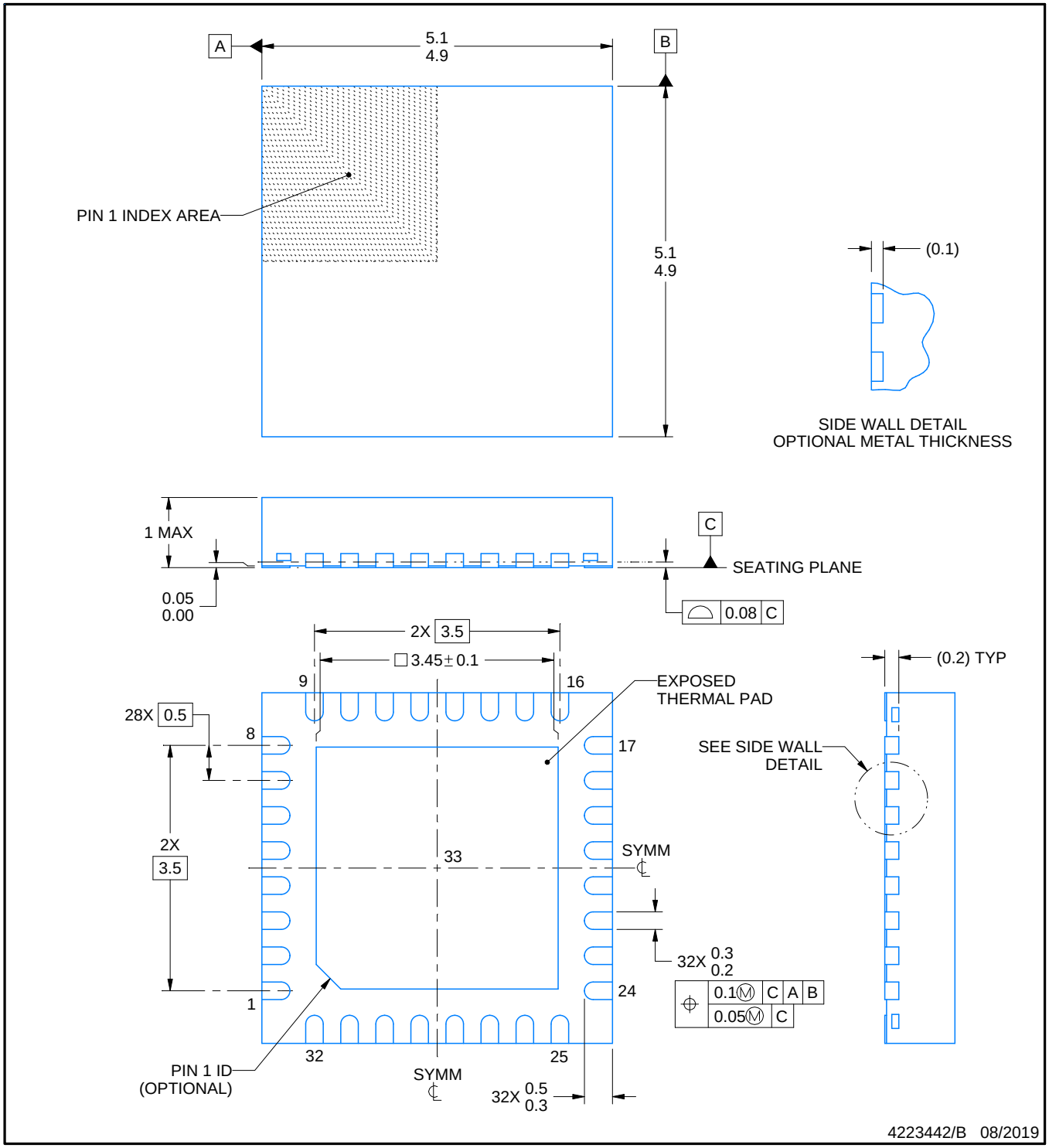

NOTES:

1. All linear dimensions are in millimeters. Any dimensions in parenthesis are for reference only. Dimensioning and tolerancing per ASME Y14.5M.
2. This drawing is subject to change without notice.
3. The package thermal pad must be soldered to the printed circuit board for thermal and mechanical performance.

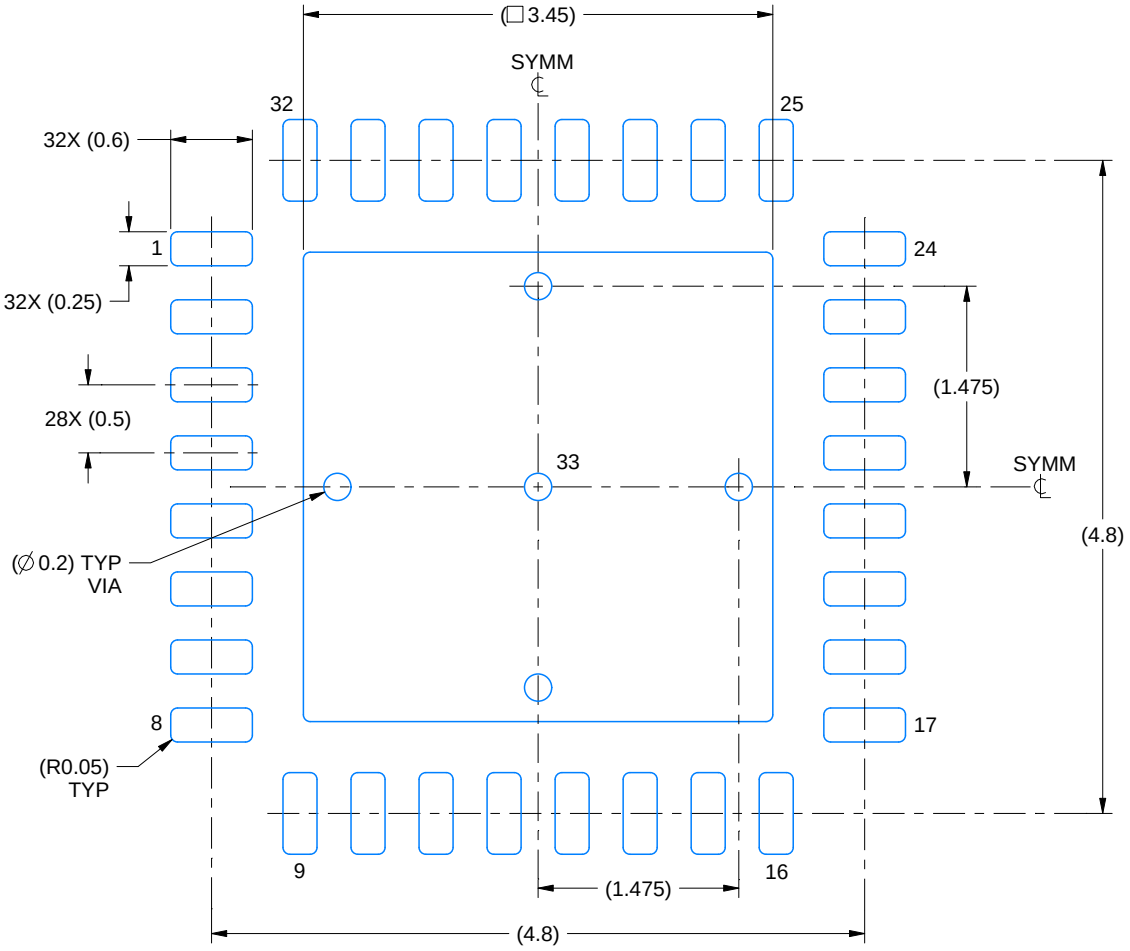

LAND PATTERN EXAMPLE
SCALE:18X

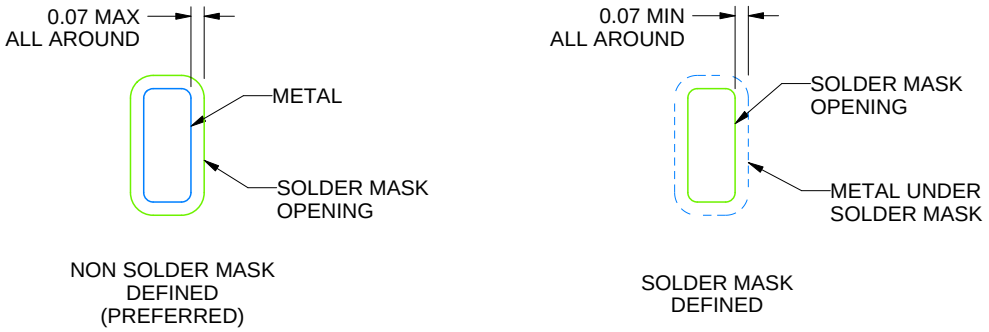

SOLDER MASK DETAILS

4223442/B 08/2019

NOTES: (continued)

4. This package is designed to be soldered to a thermal pad on the board. For more information, see Texas Instruments literature number SLUA271 (www.ti.com/lit/slua271).
5. Vias are optional depending on application, refer to device data sheet. If any vias are implemented, refer to their locations shown on this view. It is recommended that vias under paste be filled, plugged or tented.

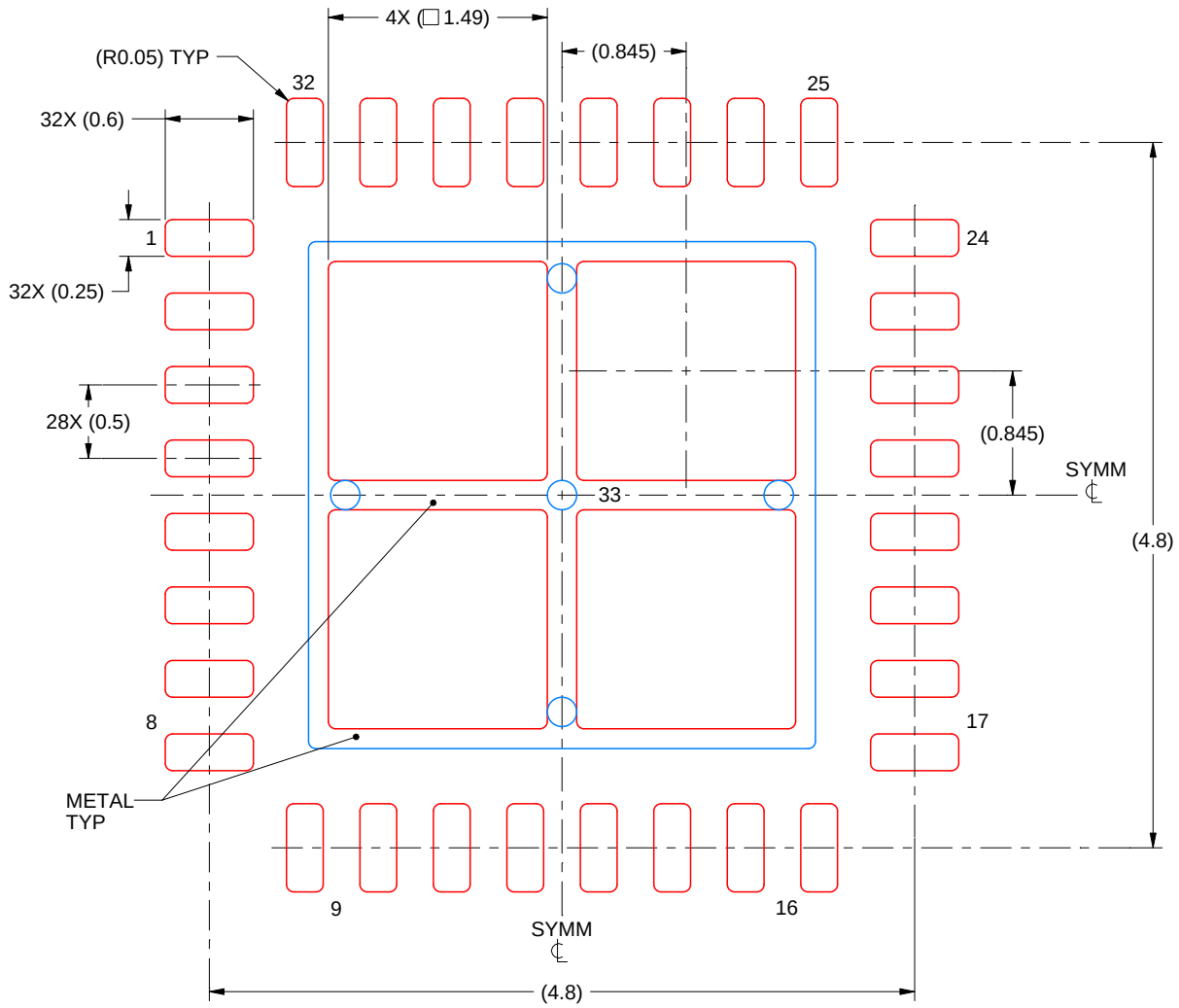

SOLDER PASTE EXAMPLE
BASED ON 0.125 mm THICK STENCIL

EXPOSED PAD 33:
75% PRINTED SOLDER COVERAGE BY AREA UNDER PACKAGE
SCALE:20X

4223442/B 08/2019

NOTES: (continued)

6. Laser cutting apertures with trapezoidal walls and rounded corners may offer better paste release. IPC-7525 may have alternate design recommendations.

重要通知和免责声明

TI“按原样”提供技术和可靠性数据（包括数据表）、设计资源（包括参考设计）、应用或其他设计建议、网络工具、安全信息和其他资源，不保证没有瑕疵且不做出任何明示或暗示的担保，包括但不限于对适销性、与某特定用途的适用性或不侵犯任何第三方知识产权的暗示担保。

这些资源可供使用 TI 产品进行设计的熟练开发人员使用。您将自行承担以下全部责任：(1) 针对您的应用选择合适的 TI 产品，(2) 设计、验证并测试您的应用，(3) 确保您的应用满足相应标准以及任何其他安全、安保法规或其他要求。

这些资源如有变更，恕不另行通知。TI 授权您仅可将这些资源用于研发本资源所述的 TI 产品的相关应用。严禁以其他方式对这些资源进行复制或展示。您无权使用任何其他 TI 知识产权或任何第三方知识产权。对于因您对这些资源的使用而对 TI 及其代表造成的任何索赔、损害、成本、损失和债务，您将全额赔偿，TI 对此概不负责。

TI 提供的产品受 TI 销售条款)、TI 通用质量指南 或 ti.com 上其他适用条款或 TI 产品随附的其他适用条款的约束。TI 提供这些资源并不会扩展或以其他方式更改 TI 针对 TI 产品发布的适用的担保或担保免责声明。 除非德州仪器 (TI) 明确将某产品指定为定制产品或客户特定产品，否则其产品均为按确定价格收入目录的标准通用器件。

TI 反对并拒绝您可能提出的任何其他或不同的条款。

版权所有 © 2026，德州仪器 (TI) 公司

最后更新日期：2025 年 10 月