CC2642R-Q1 SimpleLink™ 低功耗 *Bluetooth*® 5.2 无线 MCU

1 特性

无线微控制器

- 功能强大的 48MHz Arm® Cortex®-M4F 处理器
- EEMBC CoreMark® 评分：148
- 352KB 闪存程序存储器
- 256KB ROM，用于协议和库函数
- 8KB 高速缓存 SRAM
- 具有奇偶校验功能的 80KB 超低泄漏 SRAM，可实现高度可靠运行
- 2 引脚 cJTAG 和 JTAG 调试
- 支持无线升级 (OTA)
- 可编程无线电支持低功耗 *Bluetooth*® 5.2

超低功耗传感器控制器

- 具有 4KB SRAM 的自主 MCU
- 采样、存储和处理传感器数据
- 快速唤醒进入低功耗运行
- 软件定义外设；电容式触控、流量计、LCD

符合汽车应用要求

- 具有符合 AEC-Q100 标准的下列特性：
  - 器件温度等级 2：-40°C 至 +105°C 环境工作温度范围
  - 器件人体模型 (HBM) 静电放电 (ESD) 分类等级 2
  - 器件 CDM ESD 分类等级 C3

低功耗

- MCU 功耗：
  - 3.4 mA 有源模式，CoreMark®
  - 71 µA/MHz（运行 CoreMark® 时）
  - 0.94 µA 待机模式，RTC，80KB RAM
  - 0.15 µA 关断模式，引脚唤醒
- 超低功耗传感器控制器功耗：
  - 2 MHz 模式下为 31.9 µA
  - 24MHz 模式下为 808.5 µA
- 无线电功耗
  - RX：6.9 mA
  - TX：7.0 mA（在 0dBm 条件下）
  - TX：9.2 mA（在 +5dBm 条件下）

无线协议支持

- 低功耗 *Bluetooth*® 5.2

高性能无线电

- –105dBm，用于蓝牙 125kbps（LE 编码 PHY）
- –97dBm，用于 1Mbps PHY
- 高达 +5dBm 的输出功率，具有温度补偿

法规遵从性

- 适用于符合以下标准的系统：
  - ETSI EN 300 328、EN 300 440 类别 2 和 3
  - FCC CFR47 第 15 部分
  - ARIB STD-T66

MCU 外设

- 数字外设可连接至 31 个 GPIO 中的任何一个
- 四个 32 位或八个 16 位通用计时器
- 12 位 ADC、200ksps、8 通道
- 8 位 DAC
- 两个比较器
- 两个 UART、两个 SSI、I^2C、I^2S
- 实时时钟 (RTC)
- 集成温度和电池监控器

安全驱动工具

- AES 128 位和 256 位加密加速计
- ECC 和 RSA 公钥硬件加速器
- SHA2 加速器（最高到 SHA-512 的全套装）
- 真随机数发生器 (TRNG)

开发工具和软件

- SimpleLink™ CC13xx 和 CC26xx 软件开发套件
- 用于简单无线电配置的 SmartRF™ Studio
- 用于构建低功耗检测应用的 Sensor Controller Studio
- SysConfig 系统配置工具

工作温度范围

- 片上降压直流/直流转换器
- 1.8V 至 3.63V 单电源电压
- -40°C 至 +105°C

封装

- 具有可湿性侧面的 7mm × 7mm RTC VQFN48（31 个 GPIO）
- 具有可湿性侧面的 7mm × 7mm RGZ VQFN48（31 个 GPIO）
- 符合 RoHS 标准的封装

本文档旨在为方便起见，提供有关 TI 产品中文版本的信息，以确认产品的概要。有关适用的官方英文版本的最新信息，请访问 www.ti.com，其内容始终优先。TI 不保证翻译的准确性和有效性。在实际设计之前，请务必参考最新版本的英文版本。

2 应用

- 汽车
  - 汽车门禁和安全系统
    - 无钥匙进入及启动 (PEPS) 系统
    - 手机即钥匙 (PaaK)
    - 遥控免钥匙进入 (RKE)
  - 高级驾驶辅助系统 (ADAS)
  - 远程信息处理控制单元 (TCU)
- 音响主机
- 工业
  - 工业运输 - 资产跟踪
  - 工厂自动化和控制

3 说明

SimpleLink™ CC2642R-Q1 器件是一款符合 AEC-Q100 标准的无线微控制器 (MCU)，面向低功耗 *蓝牙* 5 汽车应用。该器件针对汽车门禁等应用中的低功耗无线通信进行了优化，包括无钥匙进入及启动 (PEPS) 和遥控无钥匙进入 (RKE)、汽车共享、引导停车、电缆更换和智能手机连接。该器件的突出特性包括：

- 支持 *Bluetooth* ® 5.2 特性：LE 编码 PHY（远距离）、LE 2Mb PHY（高速）、广播扩展、多个广播集、CSA#2 以及对 *Bluetooth* ® 5 和早期低功耗规范的向后兼容性和支持。
- 完全合格的 *Bluetooth* ® 5.2 软件协议栈包含在 SimpleLink™ CC13xx 和 CC26xx 软件开发套件 (SDK) 中，可启用到达角 (AoA)。
- 具有 0.94µA 低待机电流和完全 RAM 保持的更长电池寿命无线应用。
- 符合 AEC-Q100 标准，提供 2 级温度范围（–40°C 至 +105°C），并采用具有可湿性侧面的 7mm x 7mm VQFN 封装。
- 软件控制的专用无线电控制器 (Arm® Cortex®-M0) 提供灵活的低功耗射频收发器功能，支持多个物理层和射频标准（如实时定位 (RTLS) 技术）。
- 出色的无线电敏感度和稳健性（选择性与阻断）性能，适用于低功耗 *Bluetooth* ®（125kbps LE 编码 PHY 时为 -105dBm）。

CC2642R-Q1 器件是 SimpleLink™ MCU 平台的一部分，该平台包括 Wi-Fi®、低功耗 *蓝牙*、Thread、Zigbee®、Sub-1GHz MCU 和主机 MCU，它们共用一个通用的易用型开发环境，其中包含单核软件开发套件 (SDK) 和丰富的工具集。借助一次性集成的 SimpleLink™ 平台，可以将产品组合中的任何器件组合添加至您的设计中，从而在设计要求变更时实现 100% 的代码重用。如需更多信息，请访问 SimpleLink™ MCU 平台。

器件信息(1)

器件型号	封装	封装尺寸（标称值）
CC2642R1TWFRTCRQ1	VQFN (48)	7.00mm × 7.00mm
CC2642R1FTWRGZRQ1	VQFN (48)	7.00mm × 7.00mm

(1) 有关最新器件、封装和所有可用器件的订购信息，请参阅*封装选项附录* 或浏览 TI 网站。

Copyright © 2023 Texas Instruments Incorporated

4 Functional Block Diagram

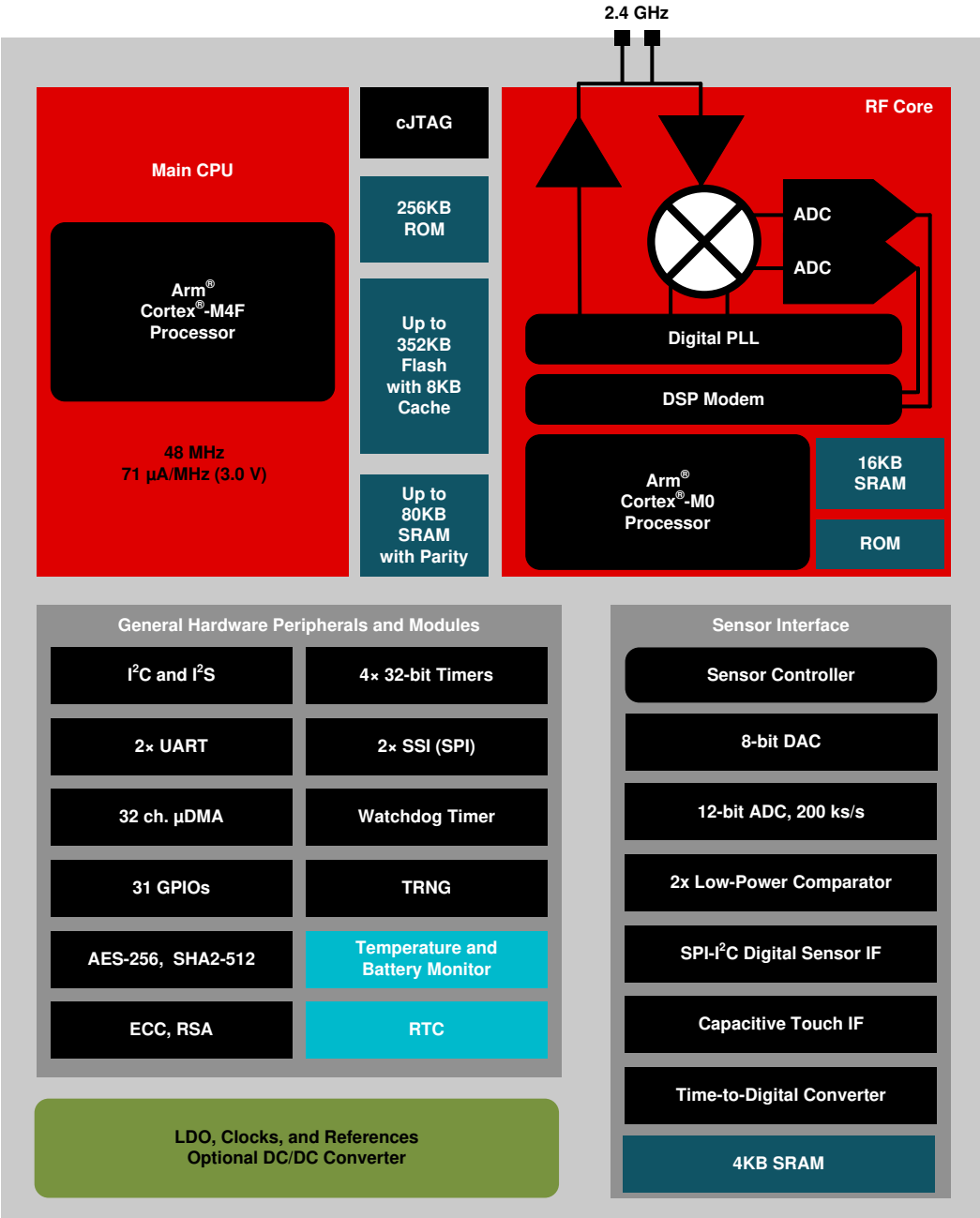

图 4-1. CC2642R-Q1 Block Diagram

Copyright © 2023 Texas Instruments Incorporated

Table of Contents

1 特性 1
2 应用 2
3 说明 2
4 Functional Block Diagram 3
5 Revision History 4
6 Device Comparison 5
7 Terminal Configuration and Functions 6
7.1 Pin Diagram – RTC and RGZ Package (Top View) 6
7.2 Signal Descriptions 7
7.3 Connections for Unused Pins and Modules 8
8 Specifications 9
8.1 Absolute Maximum Ratings 9
8.2 ESD Ratings 9
8.3 Recommended Operating Conditions 9
8.4 Power Supply and Modules 9
8.5 Power Consumption - Power Modes 10
8.6 Power Consumption - Radio Modes 11
8.7 Nonvolatile (Flash) Memory Characteristics 11
8.8 Thermal Resistance Characteristics 11
8.9 Bluetooth Low Energy Receive (RX) 12
8.10 Bluetooth Low Energy - Transmit (TX) 15
8.11 Timing and Switching Characteristics 15
8.12 Peripheral Characteristics 20
8.13 Typical Characteristics 27
9 Detailed Description 33
9.1 Overview 33
9.2 System CPU 33
9.3 Radio (RF Core) 34
9.4 Memory 35
9.5 Sensor Controller 36
9.6 Cryptography 37
9.7 Timers 38
9.8 Serial Peripherals and I/O 39
9.9 Battery and Temperature Monitor 39
9.10 µDMA 39
9.11 Debug 39
9.12 Power Management 40
9.13 Clock Systems 41
9.14 Network Processor 41
10 Application, Implementation, and Layout 42
10.1 Reference Designs 42
10.2 Junction Temperature Calculation 43
11 Device and Documentation Support 44
11.1 Device Nomenclature 44
11.2 Tools and Software 44
11.3 Documentation Support 47
11.4 支持资源 48
11.5 Trademarks 48
11.6 静电放电警告 48
11.7 术语表 48
12 Mechanical, Packaging, and Orderable Information 49

5 Revision History

注：以前版本的页码可能与当前版本的页码不同

Changes from June 29, 2022 to May 19, 2023 (from Revision B (June 2022) to Revision C (May 2023)) **Page**

- 更改了节 1 *特性* 中的“无线电功耗”（TX 电流） 1
- Changed package options for CC2340R2 5
- Changed the TYP values of the "Radio transmit current" parameter in 节 8.6 *Power Consumption - Radio Modes* 11
- Updated 表 8-1 *Typical TX Current and Output Power* 29

Changes from May 19, 2023 to July 11, 2023 (from Revision C (May 2023) to Revision D (July 2023)) **Page**

- 将“48MHz Arm Cortex-M4”更新为“Arm Cortex-M4F” 1

Copyright © 2023 Texas Instruments Incorporated

6 Device Comparison

Device	RADIO SUPPORT										FLASH (KB)	RAM + Cache (KB)	GPIO	PACKAGE SIZE				
	Sub-1 GHz Prop.	2.4GHz Prop.	Wireless M-Bus	Wi-SUN®	Sidewalk	*Bluetooth*® LE	ZigBee	Thread	Multiprotocol	+20 dBm PA				4 X 4 mm VQFN (24)	4 X 4 mm VQFN (32)	5 X 5 mm VQFN (32)	5 X 5 mm VQFN (40)	7 X 7 mm VQFN (48)
CC1310	X		X								32-128	16-20 + 8	10-30		X	X		X
CC1311R3	X		X								352	32 + 8	22-30				X	X
CC1311P3	X		X							X	352	32 + 8	26					X
CC1312R	X		X	X							352	80 + 8	30					X
CC1312R7	X		X	X	X				X		704	144 + 8	30					X
CC1352R	X	X	X	X		X	X	X	X		352	80 + 8	28					X
CC1352P	X	X	X	X		X	X	X	X	X	352	80 + 8	26					X
CC1352P7	X	X	X	X	X	X	X	X	X	X	704	144 + 8	26	X				X
CC2340R5[(1)]		X				X	X	X			512	36	12-26	X			X	
CC2640R2F						X					128	20 + 8	10-31		X	X		X
CC2642R						X					352	80 + 8	31					X
CC2642R-Q1						X					352	80 + 8	31					X
CC2651R3		X				X	X				352	32 + 8	23-31				X	X
CC2651P3		X				X	X			X	352	32 + 8	22-26				X	X
CC2652R		X				X	X	X	X		352	80 + 8	31					X
CC2652RB		X				X	X	X	X		352	80 + 8	31					X
CC2652R7		X				X	X	X	X		704	144 + 8	31					X
CC2652P		X				X	X	X	X	X	352	80 + 8	26					X
CC2652P7		X				X	X	X	X	X	704	144 + 8	26					X
CC2662R-Q1		X									352	80 + 8	31					X

(1) ZigBee and Thread support enabled by future software update

Copyright © 2023 Texas Instruments Incorporated

7 Terminal Configuration and Functions

7.1 Pin Diagram – RTC and RGZ Package (Top View)

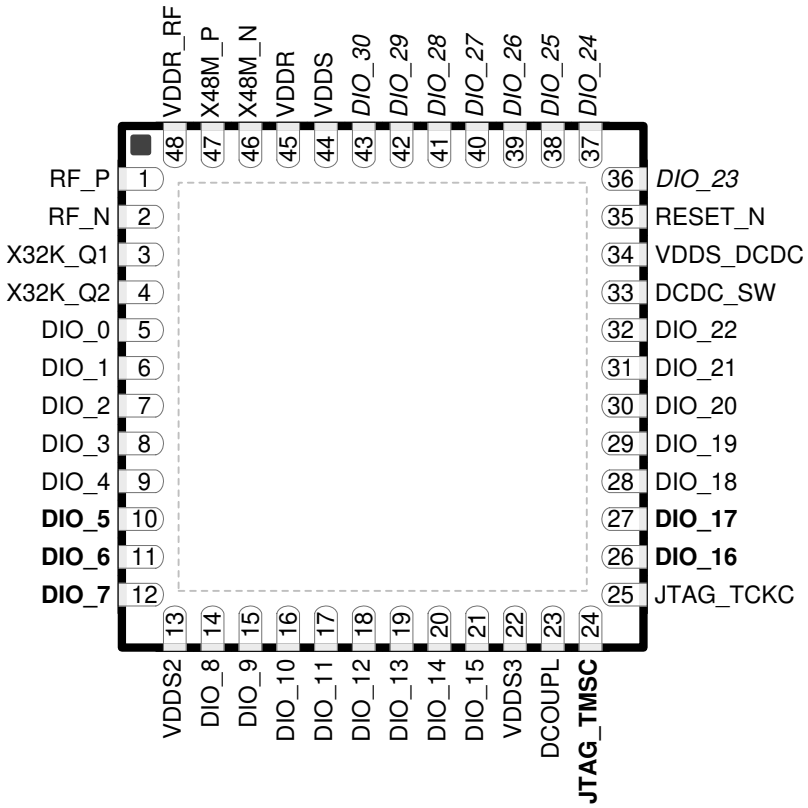

图 7-1. RTC (7-mm × 7-mm) and RGZ (7-mm × 7-mm) Pinout, 0.5-mm Pitch (Top View)

The following I/O pins marked in 图 7-1 in **bold** have high-drive capabilities:

- Pin 10, DIO_5
- Pin 11, DIO_6
- Pin 12, DIO_7
- Pin 24, JTAG_TMSC
- Pin 26, DIO_16
- Pin 27, DIO_17

The following I/O pins marked in 图 7-1 in *italics* have analog capabilities:

- Pin 36, DIO_23
- Pin 37, DIO_24
- Pin 38, DIO_25
- Pin 39, DIO_26
- Pin 40, DIO_27
- Pin 41, DIO_28
- Pin 42, DIO_29
- Pin 43, DIO_30

Copyright © 2023 Texas Instruments Incorporated

7.2 Signal Descriptions

表 7-1. Signal Descriptions – RTC and RGZ Package

PIN		I/O	TYPE	DESCRIPTION
NAME	NO.			
DCDC_SW	33	—	Power	Output from internal DC/DC converter(1)
DCOUPL	23	—	Power	1.27-V regulated digital-supply (decoupling capacitor)(2)
DIO_0	5	I/O	Digital	GPIO, Sensor Controller
DIO_1	6	I/O	Digital	GPIO, Sensor Controller
DIO_2	7	I/O	Digital	GPIO, Sensor Controller
DIO_3	8	I/O	Digital	GPIO, Sensor Controller
DIO_4	9	I/O	Digital	GPIO, Sensor Controller
DIO_5	10	I/O	Digital	GPIO, Sensor Controller, high-drive capability
DIO_6	11	I/O	Digital	GPIO, Sensor Controller, high-drive capability
DIO_7	12	I/O	Digital	GPIO, Sensor Controller, high-drive capability
DIO_8	14	I/O	Digital	GPIO
DIO_9	15	I/O	Digital	GPIO
DIO_10	16	I/O	Digital	GPIO
DIO_11	17	I/O	Digital	GPIO
DIO_12	18	I/O	Digital	GPIO
DIO_13	19	I/O	Digital	GPIO
DIO_14	20	I/O	Digital	GPIO
DIO_15	21	I/O	Digital	GPIO
DIO_16	26	I/O	Digital	GPIO, JTAG_TDO, high-drive capability
DIO_17	27	I/O	Digital	GPIO, JTAG_TDI, high-drive capability
DIO_18	28	I/O	Digital	GPIO
DIO_19	29	I/O	Digital	GPIO
DIO_20	30	I/O	Digital	GPIO
DIO_21	31	I/O	Digital	GPIO
DIO_22	32	I/O	Digital	GPIO
DIO_23	36	I/O	Digital or Analog	GPIO, Sensor Controller, analog
DIO_24	37	I/O	Digital or Analog	GPIO, Sensor Controller, analog
DIO_25	38	I/O	Digital or Analog	GPIO, Sensor Controller, analog
DIO_26	39	I/O	Digital or Analog	GPIO, Sensor Controller, analog
DIO_27	40	I/O	Digital or Analog	GPIO, Sensor Controller, analog
DIO_28	41	I/O	Digital or Analog	GPIO, Sensor Controller, analog
DIO_29	42	I/O	Digital or Analog	GPIO, Sensor Controller, analog
DIO_30	43	I/O	Digital or Analog	GPIO, Sensor Controller, analog
EGP	—	—	GND	Ground – exposed ground pad
JTAG_TMSC	24	I/O	Digital	JTAG TMSC, high-drive capability
JTAG_TCKC	25	I	Digital	JTAG TCKC
RESET_N	35	I	Digital	Reset, active low. No internal pullup resistor
RF_P	1	—	RF	Positive RF input signal to LNA during RX Positive RF output signal from PA during TX
RF_N	2	—	RF	Negative RF input signal to LNA during RX Negative RF output signal from PA during TX
VDDR	45	—	Power	1.7-V to 1.95-V supply, must be powered from the internal DC/DC converter or the internal Global LDO(3) (2)

Copyright © 2023 Texas Instruments Incorporated

表 7-1. Signal Descriptions – RTC and RGZ Package (continued)

PIN		I/O	TYPE	DESCRIPTION
NAME	NO.			
VDDR_RF	48	—	Power	1.7-V to 1.95-V supply, must be powered from the internal DC/DC converter or the internal Global LDO(4) (2)
VDDS	44	—	Power	1.8-V to 3.63-V main chip supply(1)
VDDS2	13	—	Power	1.8-V to 3.63-V DIO supply(1)
VDDS3	22	—	Power	1.8-V to 3.63-V DIO supply(1)
VDDS_DCDC	34	—	Power	1.8-V to 3.63-V DC/DC converter supply
X48M_N	46	—	Analog	48-MHz crystal oscillator pin 1
X48M_P	47	—	Analog	48-MHz crystal oscillator pin 2
X32K_Q1	3	—	Analog	32-kHz crystal oscillator pin 1
X32K_Q2	4	—	Analog	32-kHz crystal oscillator pin 2

(1) For more details, see the technical reference manual listed in 节 11.3.
(2) Do not supply external circuitry from this pin.
(3) If internal DC/DC converter is not used, this pin is supplied internally from the Global LDO.
(4) If internal DC/DC converter is not used, this pin must be connected to VDDR for supply from the Global LDO.

7.3 Connections for Unused Pins and Modules

表 7-2. Connections for Unused Pins

FUNCTION	SIGNAL NAME	PIN NUMBER	ACCEPTABLE PRACTICE(1)	PREFERRED PRACTICE(1)
GPIO	DIO_n	5 – 12 14 – 21 26 – 32 36 – 43	NC or GND	NC
32.768-kHz crystal	X32K_Q1	3	NC	NC
	X32K_Q2	4		
DC/DC converter(2)	DCDC_SW	33	NC	NC
	VDDS_DCDC	34	VDDS	VDDS

(1) NC = No connect
(2) When the DC/DC converter is not used, the inductor between DCDC_SW and VDDR can be removed. VDDR and VDDR_RF must still be connected and the VDDR decoupling capacitor must be connected and moved close to VDDR.

Copyright © 2023 Texas Instruments Incorporated

8 Specifications

All measurements are applicable to both CC2642R1TWFRTCRQ1 (RTC package) and CC2642R1FTWRGZRQ1 (RGZ package), unless otherwise noted.

8.1 Absolute Maximum Ratings

over operating free-air temperature range (unless otherwise noted)(1) (2)

			MIN	MAX	UNIT
VDDS(3)	Supply voltage		–0.3	4.1	V
	Voltage on any digital pin (4) (5)		–0.3	VDDS + 0.3, max 4.1	V
	Voltage on crystal oscillator pins, X32K_Q1, X32K_Q2, X48M_N and X48M_P		–0.3	VDDR + 0.3, max 2.25	V
V_{in}	Voltage on ADC input	Voltage scaling enabled	–0.3	VDDS	V
		Voltage scaling disabled, internal reference	–0.3	1.49	
		Voltage scaling disabled, VDDS as reference	–0.3	VDDS / 2.9	
	Input level, RF pins			5	dBm
T_{stg}	Storage temperature		–40	150	°C

(1) Stresses beyond those listed under *Absolute Maximum Ratings* may cause permanent damage to the device. These are stress ratings only, and functional operation of the device at these or any other conditions beyond those indicated under *Recommended Operating Conditions* is not implied. Exposure to absolute-maximum-rated conditions for extended periods may affect device reliability.
(2) All voltage values are with respect to ground, unless otherwise noted.
(3) VDDS2 and VDDS3 must be at the same potential as VDDS.
(4) Including analog capable DIO.
(5) Injection current is not supported on any GPIO pin

8.2 ESD Ratings

				VALUE	UNIT
V_{ESD}	Electrostatic discharge	Human body model (HBM), per AEC Q100-002(1) (2)	All pins	±2000	V
		Charged device model (CDM), per AEC Q100-011(3)	All pins	±500	V

(1) AEC Q100-002 indicates HBM stressing is done in accordance with the ANSI/ESDA/JEDEC JS-001 specification.
(2) JEDEC document JEP155 states that 500-V HBM allows safe manufacturing with a standard ESD control process
(3) JEDEC document JEP157 states that 250-V CDM allows safe manufacturing with a standard ESD control process

8.3 Recommended Operating Conditions

over operating free-air temperature range (unless otherwise noted)

	MIN	MAX	UNIT
Operating ambient temperature range	–40	105	°C
Operating supply voltage (VDDS)	1.8	3.63	V
Rising supply voltage slew rate	0	100	mV/µs
Falling supply voltage slew rate(1)	0	20	mV/µs

(1) For small coin-cell batteries, with high worst-case end-of-life equivalent source resistance, a 22-µF VDDS input capacitor must be used to ensure compliance with this slew rate.

8.4 Power Supply and Modules

over operating free-air temperature range (unless otherwise noted)

PARAMETER		TYP	UNIT
VDDS Power-on-Reset (POR) threshold		1.1 - 1.55	V
VDDS Brown-out Detector (BOD)	Rising threshold	1.77	V
VDDS Brown-out Detector (BOD), before initial boot (1)	Rising threshold	1.70	V
VDDS Brown-out Detector (BOD)	Falling threshold	1.75	V

(1) Brown-out Detector is trimmed at initial boot, value is kept until device is reset by a POR reset or the RESET_N pin

Copyright © 2023 Texas Instruments Incorporated

8.5 Power Consumption - Power Modes

When measured on the CC26x2REM-7ID-Q1 reference design with T_c = 25 °C, V_{DDS} = 3.0 V with DC/DC enabled unless otherwise noted.

PARAMETER		TEST CONDITIONS	TYP	UNIT
Core Current Consumption				
I_{core}	Reset and Shutdown	Reset. RESET_N pin asserted or VDDS below power-on-reset threshold	150	nA
		Shutdown. No clocks running, no retention	150	
	Standby without cache retention	RTC running, CPU, 80KB RAM and (partial) register retention. RCOSC_LF	0.94	µA
		RTC running, CPU, 80KB RAM and (partial) register retention XOSC_LF	1.09	µA
	Standby with cache retention	RTC running, CPU, 80KB RAM and (partial) register retention. RCOSC_LF	3.2	µA
		RTC running, CPU, 80KB RAM and (partial) register retention. XOSC_LF	3.3	µA
	Idle	Supply Systems and RAM powered RCOSC_HF	675	µA
	Active	MCU running CoreMark at 48 MHz RCOSC_HF	3.39	mA
Peripheral Current Consumption				
I_{peri}	Peripheral power domain	Delta current with domain enabled	97.7	µA
	Serial power domain	Delta current with domain enabled	7.2	
	RF Core	Delta current with power domain enabled, clock enabled, RF Core idle	210.9	
	µDMA	Delta current with clock enabled, module is idle	63.9	
	Timers	Delta current with clock enabled, module is idle(3)	81.0	
	I2C	Delta current with clock enabled, module is idle	10.8	
	I2S	Delta current with clock enabled, module is idle	27.6	
	SSI	Delta current with clock enabled, module is idle	82.9	
	UART	Delta current with clock enabled, module is idle(1)	167.5	
	CRYPTO (AES)	Delta current with clock enabled, module is idle(2)	25.6	
	PKA	Delta current with clock enabled, module is idle	84.7	
	TRNG	Delta current with clock enabled, module is idle	35.6	
Sensor Controller Engine Consumption				
I_{SCE}	Active mode	24 MHz, infinite loop	808.5	µA
	Low-power mode	2 MHz, infinite loop	31.9	

(1) Only one UART running
(2) Only one SSI running
(3) Only one GPTimer running

Copyright © 2023 Texas Instruments Incorporated

8.6 Power Consumption - Radio Modes

When measured on the CC26x2REM-7ID-Q1 reference design with T_c = 25 °C, V_{DDS} = 3.0 V with DC/DC enabled unless otherwise noted.

PARAMETER		TEST CONDITIONS	TYP	UNIT
	Radio receive current	2440 MHz	6.9	mA
	Radio transmit current	0 dBm output power setting 2440 MHz	7.0	mA
		+5 dBm output power setting 2440 MHz	9.2	mA

8.7 Nonvolatile (Flash) Memory Characteristics

Over operating free-air temperature range and V_{DDS} = 3.0 V (unless otherwise noted)

PARAMETER	TEST CONDITIONS	MIN	TYP	MAX	UNIT
Flash sector size			8		KB
Supported flash erase cycles before failure, full bank(1)		30			k Cycles
Supported flash erase cycles before failure, single sector(2)		60			k Cycles
Maximum number of write operations per row before sector erase(3)				83	Write Operations
Flash retention	105 °C	11.4			Years at 105 °C
Flash sector erase current	Average delta current		10.7		mA
Flash sector erase time(4)	Zero cycles		10		ms
Flash sector erase time(4)	30k cycles			4000	ms
Flash write current	Average delta current, 4 bytes at a time		6.2		mA
Flash write time	4 bytes at a time		21.6		µs

(1) A full bank erase is counted as a single erase cycle on each sector
(2) Up to 4 customer-designated sectors can be individually erased an additional 30k times beyond the baseline bank limitation of 30k cycles
(3) Each wordline is 2048 bits (or 256 bytes) wide. This limitation corresponds to sequential memory writes of 4 (3.1) bytes minimum per write over a whole wordline. If additional writes to the same wordline are required, a sector erase is required once the maximum number of write operations per row is reached.
(4) This number is dependent on Flash aging and increases over time and erase cycles

8.8 Thermal Resistance Characteristics

THERMAL METRIC(1)		PACKAGE		UNIT
		RTC (VQFN)	RGZ (VQFN)	
		48 PINS	48 PINS	
$R_{\theta JA}$	Junction-to-ambient thermal resistance	23.0	24.2	°C/W(2)
$R_{\theta JC(top)}$	Junction-to-case (top) thermal resistance	13.2	13.6	°C/W(2)
$R_{\theta JB}$	Junction-to-board thermal resistance	7.5	7.8	°C/W(2)
ψ_{JT}	Junction-to-top characterization parameter	0.3	0.1	°C/W(2)
ψ_{JB}	Junction-to-board characterization parameter	7.4	7.7	°C/W(2)
$R_{\theta JC(bot)}$	Junction-to-case (bottom) thermal resistance	1.3	1.7	°C/W(2)

(1) For more information about traditional and new thermal metrics, see *Semiconductor and IC Package Thermal Metrics*.
(2) °C/W = degrees Celsius per watt.

Copyright © 2023 Texas Instruments Incorporated

8.9 Bluetooth Low Energy Receive (RX)

When measured on the CC26x2REM-7ID-Q1 reference design with T_c = 25 °C, V_{DDS} = 3.0 V, f_{RF} = 2440 MHz with DC/DC enabled unless otherwise noted. All measurements are performed at the antenna input with a combined RX and TX path. All measurements are performed conducted. All measurements are applicable to both RTC and RGZ packages, unless otherwise noted.

PARAMETER	TEST CONDITIONS	MIN	TYP	MAX	UNIT
125 kbps (LE Coded)					
Receiver sensitivity	Differential mode. BER = 10^{-3}		–105		dBm
Receiver saturation	Differential mode. BER = 10^{-3}		>5		dBm
Frequency error tolerance	Difference between the incoming carrier frequency and the internally generated carrier frequency		> (–300 / 300)		kHz
Data rate error tolerance	Difference between incoming data rate and the internally generated data rate (37-byte packets)		> (–320 / 240)		ppm
Data rate error tolerance	Difference between incoming data rate and the internally generated data rate (255-byte packets)		> (–100 / 125)		ppm
Co-channel rejection(1)	Wanted signal at –79 dBm, modulated interferer in channel, BER = 10^{-3}		–1.5		dB
Selectivity, ±1 MHz(1)	Wanted signal at –79 dBm, modulated interferer at ±1 MHz, BER = 10^{-3}		8 / 4.5(2)		dB
Selectivity, ±2 MHz(1)	Wanted signal at –79 dBm, modulated interferer at ±2 MHz, BER = 10^{-3}. Applicable to RTC package		44 / 39(2)		dB
Selectivity, ±2 MHz(1)	Wanted signal at –79 dBm, modulated interferer at ±2 MHz, BER = 10^{-3}. Applicable to RGZ package		43 / 39(2)		dB
Selectivity, ±3 MHz(1)	Wanted signal at –79 dBm, modulated interferer at ±3 MHz, BER = 10^{-3}. Applicable to RTC package		46 / 44(2)		dB
Selectivity, ±3 MHz(1)	Wanted signal at –79 dBm, modulated interferer at ±3 MHz, BER = 10^{-3}. Applicable to RGZ package		42 / 42(2)		dB
Selectivity, ±4 MHz(1)	Wanted signal at –79 dBm, modulated interferer at ±4 MHz, BER = 10^{-3}. Applicable to RTC package		44 / 46(2)		dB
Selectivity, ±4 MHz(1)	Wanted signal at –79 dBm, modulated interferer at ±4 MHz, BER = 10^{-3}. Applicable to RGZ package		42 / 42(2)		dB
Selectivity, ±6 MHz(1)	Wanted signal at –79 dBm, modulated interferer at ±6 MHz, BER = 10^{-3}. Applicable to RTC package		48 / 44(2)		dB
Selectivity, ±6 MHz(1)	Wanted signal at –79 dBm, modulated interferer at ±6 MHz, BER = 10^{-3}. Applicable to RGZ package		48 / 41(2)		dB
Selectivity, ±7 MHz or more(1)	Wanted signal at –79 dBm, modulated interferer at ±7 MHz or more, BER = 10^{-3}. Applicable to RTC package		51 / 45(2)		dB
Selectivity, ±7 MHz or more(1)	Wanted signal at –79 dBm, modulated interferer at ±7 MHz or more, BER = 10^{-3}. Applicable to RGZ package		51 / 43(2)		dB
Selectivity, Image frequency(1)	Wanted signal at –79 dBm, modulated interferer at image frequency, BER = 10^{-3}		39		dB
Selectivity, Image frequency ±1 MHz(1)	Note that Image frequency + 1 MHz is the Co- channel – 1 MHz. Wanted signal at –79 dBm, modulated interferer at ±1 MHz from image frequency, BER = 10^{-3}		4.5 / 44 (2)		dB
500 kbps (LE Coded)					
Receiver sensitivity	Differential mode. BER = 10^{-3}		–100		dBm
Receiver saturation	Differential mode. BER = 10^{-3}		> 5		dBm
Frequency error tolerance	Difference between the incoming carrier frequency and the internally generated carrier frequency		> (–300 / 300)		kHz
Data rate error tolerance	Difference between incoming data rate and the internally generated data rate (37-byte packets)		> (–350 / 450)		ppm
Data rate error tolerance	Difference between incoming data rate and the internally generated data rate (255-byte packets)		> (–175 / 175)		ppm
Co-channel rejection(1)	Wanted signal at –72 dBm, modulated interferer in channel, BER = 10^{-3}		–4		dB
Selectivity, ±1 MHz(1)	Wanted signal at –72 dBm, modulated interferer at ±1 MHz, BER = 10^{-3}		8 / 4(2)		dB
Selectivity, ±2 MHz(1)	Wanted signal at –72 dBm, modulated interferer at ±2 MHz, BER = 10^{-3}. Applicable to RTC package		44 / 36(2)		dB

Copyright © 2023 Texas Instruments Incorporated

When measured on the CC26x2REM-7ID-Q1 reference design with T_c = 25 °C, V_{DDS} = 3.0 V, f_{RF} = 2440 MHz with DC/DC enabled unless otherwise noted. All measurements are performed at the antenna input with a combined RX and TX path. All measurements are performed conducted. All measurements are applicable to both RTC and RGZ packages, unless otherwise noted.

PARAMETER	TEST CONDITIONS	MIN	TYP	MAX	UNIT
Selectivity, ±2 MHz(1)	Wanted signal at –72 dBm, modulated interferer at ±2 MHz, BER = 10^{-3}. Applicable to RGZ package		42 / 36(2)		dB
Selectivity, ±3 MHz(1)	Wanted signal at –72 dBm, modulated interferer at ±3 MHz, BER = 10^{-3}. Applicable to RTC package		46 / 46(2)		dB
Selectivity, ±3 MHz(1)	Wanted signal at –72 dBm, modulated interferer at ±3 MHz, BER = 10^{-3}. Applicable to RGZ package		42 / 41(2)		dB
Selectivity, ±4 MHz(1)	Wanted signal at –72 dBm, modulated interferer at ±4 MHz, BER = 10^{-3}. Applicable to RTC package		45 / 47(2)		dB
Selectivity, ±4 MHz(1)	Wanted signal at –72 dBm, modulated interferer at ±4 MHz, BER = 10^{-3}. Applicable to RGZ package		42 / 42(2)		dB
Selectivity, ±6 MHz(1)	Wanted signal at –72 dBm, modulated interferer at ±6 MHz, BER = 10^{-3}. Applicable to RTC package		46 / 45(2)		dB
Selectivity, ±6 MHz(1)	Wanted signal at –72 dBm, modulated interferer at ±6 MHz, BER = 10^{-3}. Applicable to RGZ package		44 / 42(2)		dB
Selectivity, ±7 MHz or more(1)	Wanted signal at –72 dBm, modulated interferer at ±7 MHz or more, BER = 10^{-3}. Applicable to RTC package		49 / 45(2)		dB
Selectivity, ±7 MHz or more(1)	Wanted signal at –72 dBm, modulated interferer at ±7 MHz or more, BER = 10^{-3}. Applicable to RGZ package		47 / 43(2)		dB
Selectivity, Image frequency(1)	Wanted signal at –72 dBm, modulated interferer at image frequency, BER = 10^{-3}		36		dB
Selectivity, Image frequency ±1 MHz(1)	Note that Image frequency + 1 MHz is the Co- channel –1 MHz. Wanted signal at –72 dBm, modulated interferer at ±1 MHz from image frequency, BER = 10^{-3}		4 / 46(2)		dB
1 Mbps (LE 1M)					
Receiver sensitivity	Differential mode. BER = 10^{-3}		–97		dBm
Receiver saturation	Differential mode. BER = 10^{-3}		> 5		dBm
Frequency error tolerance	Difference between the incoming carrier frequency and the internally generated carrier frequency		> (–350 / 340)		kHz
Data rate error tolerance	Difference between incoming data rate and the internally generated data rate (37-byte packets)		> (–750 / 750)		ppm
Co-channel rejection(1)	Wanted signal at –67 dBm, modulated interferer in channel, BER = 10^{-3}		–6		dB
Selectivity, ±1 MHz(1)	Wanted signal at –67 dBm, modulated interferer at ±1 MHz, BER = 10^{-3}		7 / 4(2)		dB
Selectivity, ±2 MHz(1)	Wanted signal at –67 dBm, modulated interferer at ±2 MHz, BER = 10^{-3}		40 / 33(2)		dB
Selectivity, ±3 MHz(1)	Wanted signal at –67 dBm, modulated interferer at ±3 MHz, BER = 10^{-3}. Applicable to RTC package		36 / 41(2)		dB
Selectivity, ±3 MHz(1)	Wanted signal at –67 dBm, modulated interferer at ±3 MHz, BER = 10^{-3}. Applicable to RGZ package		31 / 41(2)		dB
Selectivity, ±4 MHz(1)	Wanted signal at –67 dBm, modulated interferer at ±4 MHz, BER = 10^{-3}		36 / 45(2)		dB
Selectivity, ±5 MHz or more(1)	Wanted signal at –67 dBm, modulated interferer at ±5 MHz or more, BER = 10^{-3}		40		dB
Selectivity, image frequency(1)	Wanted signal at –67 dBm, modulated interferer at image frequency, BER = 10^{-3}		33		dB
Selectivity, image frequency ±1 MHz(1)	Note that Image frequency + 1 MHz is the Co- channel –1 MHz. Wanted signal at –67 dBm, modulated interferer at ±1 MHz from image frequency, BER = 10^{-3}		4 / 41(2)		dB
Out-of-band blocking(3)	30 MHz to 2000 MHz		–10		dBm
Out-of-band blocking	2003 MHz to 2399 MHz		–18		dBm
Out-of-band blocking	2484 MHz to 2997 MHz		–12		dBm
Out-of-band blocking	3000 MHz to 12.75 GHz		–2		dBm

Copyright © 2023 Texas Instruments Incorporated

When measured on the CC26x2REM-7ID-Q1 reference design with T_c = 25 °C, V_{DDS} = 3.0 V, f_{RF} = 2440 MHz with DC/DC enabled unless otherwise noted. All measurements are performed at the antenna input with a combined RX and TX path. All measurements are performed conducted. All measurements are applicable to both RTC and RGZ packages, unless otherwise noted.

PARAMETER	TEST CONDITIONS	MIN	TYP	MAX	UNIT
Intermodulation	Wanted signal at 2402 MHz, – 64 dBm. Two interferers at 2405 and 2408 MHz respectively, at the given power level		– 42		dBm
Spurious emissions, 30 to 1000 MHz(4)	Measurement in a 50-Ω single-ended load.		< – 57		dBm
Spurious emissions, 1 to 12.75 GHz(4)	Measurement in a 50 Ω single-ended load.		< – 47		dBm
RSSI dynamic range			70		dB
RSSI accuracy			±4		dB
2 Mbps (LE 2M)					
Receiver sensitivity	Differential mode. Measured at SMA connector, BER = 10^{-3}		– 92		dBm
Receiver saturation	Differential mode. Measured at SMA connector, BER = 10^{-3}		> 5		dBm
Frequency error tolerance	Difference between the incoming carrier frequency and the internally generated carrier frequency		> (– 440 / 500)		kHz
Data rate error tolerance	Difference between incoming data rate and the internally generated data rate (37-byte packets)		> (– 700 / 750)		ppm
Co-channel rejection(1)	Wanted signal at – 67 dBm, modulated interferer in channel, BER = 10^{-3}		– 7		dB
Selectivity, ±2 MHz(1)	Wanted signal at – 67 dBm, modulated interferer at ±2 MHz, Image frequency is at – 2 MHz, BER = 10^{-3}		8 / 4(2)		dB
Selectivity, ±4 MHz(1)	Wanted signal at – 67 dBm, modulated interferer at ±4 MHz, BER = 10^{-3}. Applicable to RTC package		36 / 34(2)		dB
Selectivity, ±4 MHz(1)	Wanted signal at – 67 dBm, modulated interferer at ±4 MHz, BER = 10^{-3} , Applicable to RGZ package		33 / 31(2)		dB
Selectivity, ±6 MHz or more(1)	Wanted signal at – 67 dBm, modulated interferer at ±6 MHz or more, BER = 10^{-3} Applicable to RTC package		37 / 36(2)		dB
Selectivity, ±6 MHz or more(1)	Wanted signal at – 67 dBm, modulated interferer at ±6 MHz or more, BER = 10^{-3} . Applicable to RGZ package		37 / 32(2)		dB
Selectivity, image frequency(1)	Wanted signal at – 67 dBm, modulated interferer at image frequency, BER = 10^{-3}		4		dB
Selectivity, image frequency ±2 MHz(1)	Note that Image frequency + 2 MHz is the Co-channel. Wanted signal at – 67 dBm, modulated interferer at ±2 MHz from image frequency, BER = 10^{-3}		– 7 / 36(2)		dB
Out-of-band blocking(3)	30 MHz to 2000 MHz		– 16		dBm
Out-of-band blocking	2003 MHz to 2399 MHz		– 21		dBm
Out-of-band blocking	2484 MHz to 2997 MHz		– 15		dBm
Out-of-band blocking	3000 MHz to 12.75 GHz		– 12		dBm
Intermodulation	Wanted signal at 2402 MHz, – 64 dBm. Two interferers at 2405 and 2408 MHz respectively, at the given power level		– 38		dBm
RSSI dynamic range			63		dB
RSSI Accuracy (+/-)			±4		dB

(1) Numbers given as I/C dB
(2) X / Y, where X is +N MHz and Y is – N MHz
(3) Excluding one exception at F_{wanted} / 2, per Bluetooth Specification
(4) Suitable for systems targeting compliance with worldwide radio-frequency regulations ETSI EN 300 328 and EN 300 440 Category 2 (Europe), FCC CFR47 Part 15 (US), and ARIB STD-T66 (Japan)

Copyright © 2023 Texas Instruments Incorporated

8.10 Bluetooth Low Energy - Transmit (TX)

When measured on the CC26x2REM-7ID-Q1 reference design with T_c = 25 °C, V_{DDS} = 3.0 V, f_{RF} = 2440 MHz with DC/DC enabled unless otherwise noted. All measurements are performed at the antenna input with a combined RX and TX path. All measurements are performed conducted.

PARAMETER	TEST CONDITIONS		MIN	TYP	MAX	UNIT
General Parameters						
5dBm output power	Differential mode, delivered to a single-ended 50 Ω load through a balun			5		dBm
Output power programmable range	Differential mode, delivered to a single-ended 50 Ω load through a balun			26		dB
Spurious emissions and harmonics						
Spurious emissions (1)	f < 1 GHz, outside restricted bands	+5 dBm setting		< –36		dBm
	f < 1 GHz, restricted bands ETSI	+5 dBm setting		< –54		dBm
	f < 1 GHz, restricted bands FCC	+5 dBm setting		< –55		dBm
	f > 1 GHz, including harmonics	+5 dBm setting		< –42		dBm
Harmonics (1)	Second harmonic	+5 dBm setting		< –42		dBm
	Third harmonic	+5 dBm setting		< –42		dBm

(1) Suitable for systems targeting compliance with worldwide radio-frequency regulations ETSI EN 300 328 and EN 300 440 Category 2 (Europe), FCC CFR47 Part 15 (US), and ARIB STD-T66 (Japan).

8.11 Timing and Switching Characteristics

8.11.1 Reset Timing

PARAMETER	MIN	TYP	MAX	UNIT
RESET_N low duration	1			µs

8.11.2 Wakeup Timing

Measured over operating free-air temperature with V_{DDS} = 3.0 V (unless otherwise noted). The times listed here do not include software overhead.

PARAMETER	TEST CONDITIONS	MIN	TYP	MAX	UNIT
MCU, Reset to Active(1)			850 - 3000		µs
MCU, Shutdown to Active(1)			850 - 3000		µs
MCU, Standby to Active			160		µs
MCU, Active to Standby			36		µs
MCU, Idle to Active			14		µs

(1) The wakeup time is dependent on remaining charge on the VDDR capacitor when starting the device, and thus how long the device has been in Reset or Shutdown before starting up again.

Copyright © 2023 Texas Instruments Incorporated

8.11.3 Clock Specifications

8.11.3.1 48 MHz Crystal Oscillator (XOSC_HF)

Measured on the CC26x2REM-7ID-Q1 reference design with T_c = 25 °C, V_{DDS} = 3.0 V, unless otherwise noted.(1)

	PARAMETER	MIN	TYP	MAX	UNIT
	Crystal frequency		48		MHz
ESR	Equivalent series resistance 6 pF < C_L ⩽ 9 pF		20	60	Ω
ESR	Equivalent series resistance 5 pF < C_L ⩽ 6 pF			80	Ω
L_M	Motional inductance, relates to the load capacitance that is used for the crystal (C_L in Farads)(5)		< 0.3 × 10^{-24} / C_L^2		H
C_L	Crystal load capacitance(4)	5	7(3)	9	pF
	Start-up time(2)		200		µs

(1) Probing or otherwise stopping the crystal while the DC/DC converter is enabled may cause permanent damage to the device.
(2) Start-up time using the TI-provided power driver. Start-up time may increase if driver is not used.
(3) On-chip default connected capacitance including reference design parasitic capacitance. Connected internal capacitance is changed through software in the Customer Configuration section (CCFG).
(4) Adjustable load capacitance is integrated within the device.
(5) The crystal manufacturer's specification must satisfy this requirement for proper operation.

8.11.3.2 48 MHz RC Oscillator (RCOSC_HF)

Measured on the CC26x2REM-7ID-Q1 reference design with T_c = 25 °C, V_{DDS} = 3.0 V, unless otherwise noted.

	MIN	TYP	MAX	UNIT
Frequency		48		MHz
Uncalibrated frequency accuracy		±1		%
Calibrated frequency accuracy(1)		±0.25		%
Start-up time		5		µs

(1) Accuracy relative to the calibration source (XOSC_HF)

8.11.3.3 2 MHz RC Oscillator (RCOSC_MF)

Measured on the CC26x2REM-7ID-Q1 reference design with T_c = 25 °C, V_{DDS} = 3.0 V, unless otherwise noted.

	MIN	TYP	MAX	UNIT
Calibrated frequency		2		MHz
Start-up time		5		µs

8.11.3.4 32.768 kHz Crystal Oscillator (XOSC_LF)

Measured on the CC26x2REM-7ID-Q1 reference design with T_c = 25 °C, V_{DDS} = 3.0 V, unless otherwise noted.

		MIN	TYP	MAX	UNIT
	Crystal frequency		32.768		kHz
ESR	Equivalent series resistance		30	100	kΩ
C_L	Crystal load capacitance	6	7(1)	12	pF

(1) Default load capacitance using TI reference designs including parasitic capacitance. Crystals with different load capacitance may be used.

8.11.3.5 32 kHz RC Oscillator (RCOSC_LF)

Measured on the CC26x2REM-7ID-Q1 reference design with T_c = 25 °C, V_{DDS} = 3.0 V, unless otherwise noted.

	MIN	TYP	MAX	UNIT
Calibrated frequency		32.8 (1)		kHz

Copyright © 2023 Texas Instruments Incorporated

Measured on the CC26x2REM-7ID-Q1 reference design with T_c = 25 °C, V_{DDS} = 3.0 V, unless otherwise noted.

	MIN	TYP	MAX	UNIT
Temperature coefficient		±50		ppm/C

(1) When using RCOSC_LF as source for the low frequency system clock (SCLK_LF), the accuracy of the SCLK_LF-derived Real Time Clock (RTC) can be improved by measuring RCOSC_LF relative to XOSC_HF and compensating for the RTC tick speed. This functionality is available through the TI-provided Power driver.

Copyright © 2023 Texas Instruments Incorporated

8.11.4 Synchronous Serial Interface (SSI) Characteristics

8.11.4.1 Synchronous Serial Interface (SSI) Characteristics

Over operating free-air temperature range (unless otherwise noted)

PARAMETER NO.	PARAMETER		MIN	TYP	MAX	UNIT
S1	t_{clk_per}	SSIClk cycle time	12		65024	System Clocks (2)
S2(1)	t_{clk_high}	SSIClk high time		0.5		t_{clk_per}
S3(1)	t_{clk_low}	SSIClk low time		0.5		t_{clk_per}

(1) Refer to SSI timing diagrams Figure 8-1, Figure 8-2, and Figure 8-3.
(2) When using the TI-provided Power driver, the SSI system clock is always 48 MHz.

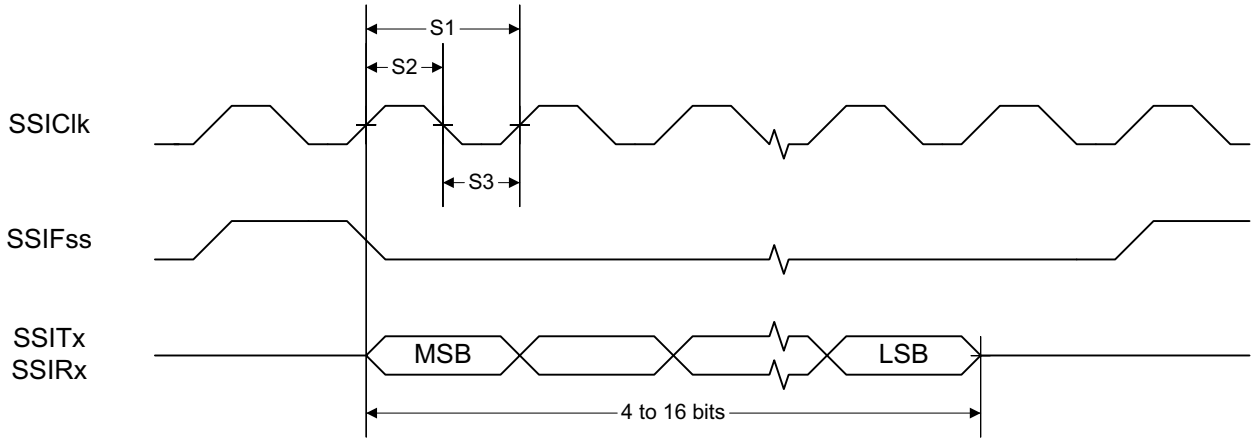

图 8-1. SSI Timing for TI Frame Format (FRF = 01), Single Transfer Timing Measurement

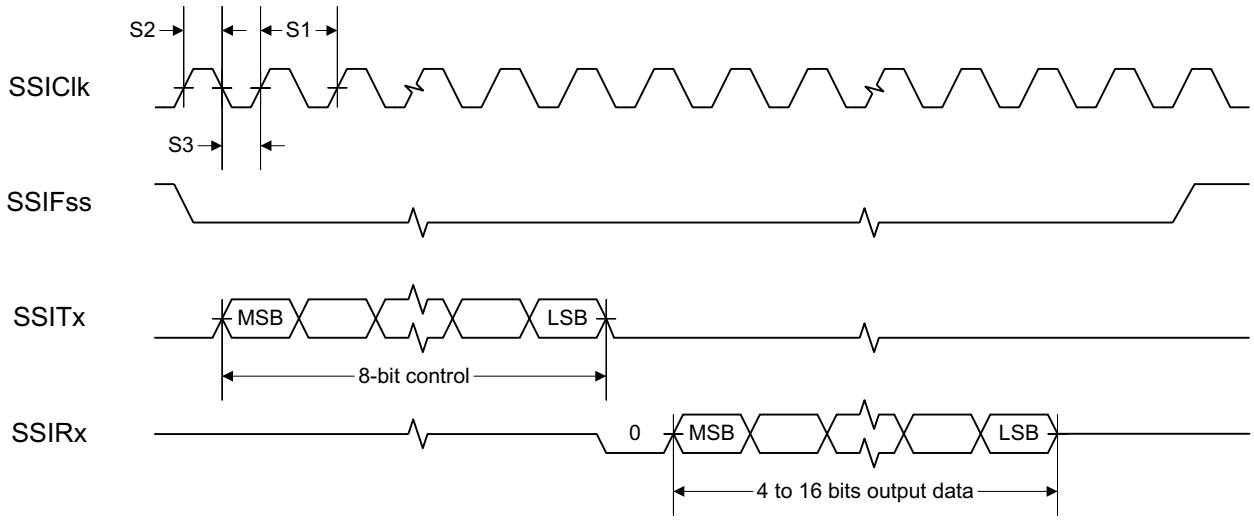

图 8-2. SSI Timing for MICROWIRE Frame Format (FRF = 10), Single Transfer

Copyright © 2023 Texas Instruments Incorporated

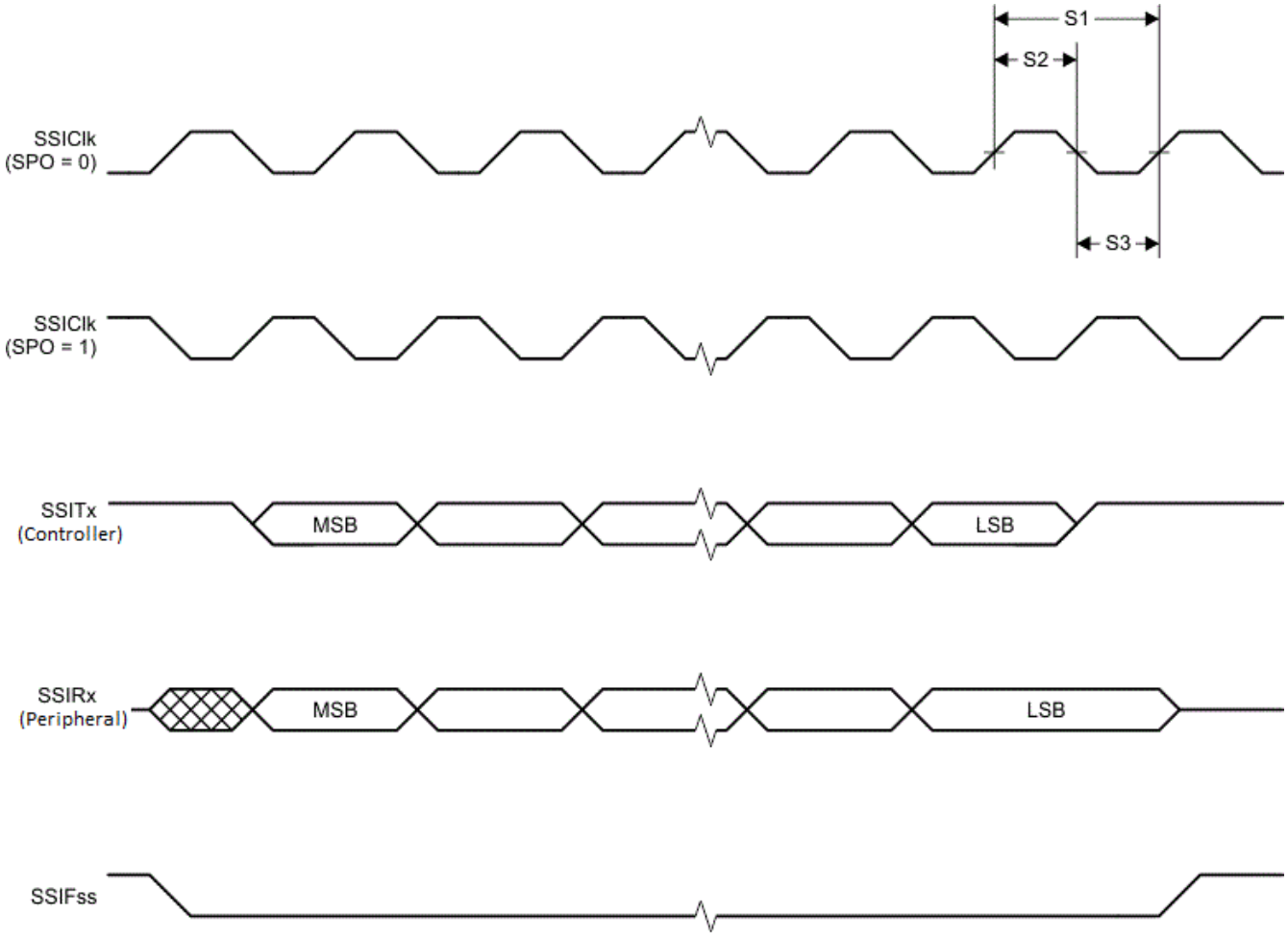

图 8-3. SSI Timing for SPI Frame Format (FRF = 00), With SPH = 1

8.11.5 UART

8.11.5.1 UART Characteristics

Over operating free-air temperature range (unless otherwise noted)

PARAMETER	MIN	TYP	MAX	UNIT
UART rate			3	MBaud

8.12 Peripheral Characteristics

8.12.1 ADC

Analog-to-Digital Converter (ADC) Characteristics

T_c = 25 °C, V_{DDS} = 3.0 V and voltage scaling enabled, unless otherwise noted.(1)
Performance numbers require use of offset and gain adjustements in software by TI-provided ADC drivers.

PARAMETER		TEST CONDITIONS	MIN	TYP	MAX	UNIT
	Input voltage range		0		VDDS	V
	Resolution			12		Bits
	Sample rate				200	kSamples/s
	Offset	Internal 4.3 V equivalent reference(2)		–0.24		LSB
	Gain error	Internal 4.3 V equivalent reference(2)		7.14		LSB
DNL(4)	Differential nonlinearity			>–1		LSB
INL	Integral nonlinearity			±4		LSB
ENOB	Effective number of bits	Internal 4.3 V equivalent reference(2), 200 kSamples/s, 9.6 kHz input tone		9.8		Bits
		Internal 4.3 V equivalent reference(2), 200 kSamples/s, 9.6 kHz input tone, DC/DC enabled		9.8		
		VDDS as reference, 200 kSamples/s, 9.6 kHz input tone		10.1		
		Internal reference, voltage scaling disabled, 32 samples average, 200 kSamples/s, 300 Hz input tone		11.1		
		Internal reference, voltage scaling disabled, 14-bit mode, 200 kSamples/s, 600 Hz input tone (5)		11.3		
		Internal reference, voltage scaling disabled, 15-bit mode, 200 kSamples/s, 150 Hz input tone (5)		11.6		
THD	Total harmonic distortion	Internal 4.3 V equivalent reference(2), 200 kSamples/s, 9.6 kHz input tone		–65		dB
		VDDS as reference, 200 kSamples/s, 9.6 kHz input tone		–70		
		Internal reference, voltage scaling disabled, 32 samples average, 200 kSamples/s, 300 Hz input tone		–72		
SINAD, SNDR	Signal-to-noise and distortion ratio	Internal 4.3 V equivalent reference(2), 200 kSamples/s, 9.6 kHz input tone		60		dB
		VDDS as reference, 200 kSamples/s, 9.6 kHz input tone		63		
		Internal reference, voltage scaling disabled, 32 samples average, 200 kSamples/s, 300 Hz input tone		68		
SFDR	Spurious-free dynamic range	Internal 4.3 V equivalent reference(2), 200 kSamples/s, 9.6 kHz input tone		70		dB
		VDDS as reference, 200 kSamples/s, 9.6 kHz input tone		73		
		Internal reference, voltage scaling disabled, 32 samples average, 200 kSamples/s, 300 Hz input tone		75		
	Conversion time	Serial conversion, time-to-output, 24 MHz clock		50		clock-cycles
	Current consumption	Internal 4.3 V equivalent reference(2)		0.42		mA
	Current consumption	VDDS as reference		0.6		mA
	Reference voltage	Equivalent fixed internal reference (input voltage scaling enabled). For best accuracy, the ADC conversion should be initiated through the TI-RTOS API in order to include the gain/offset compensation factors stored in FCFG1		4.3(2) (3)		V
	Reference voltage	Fixed internal reference (input voltage scaling disabled). For best accuracy, the ADC conversion should be initiated through the TI-RTOS API in order to include the gain/offset compensation factors stored in FCFG1. This value is derived from the scaled value (4.3 V) as follows: V_{ref} = 4.3 V × 1408 / 4095		1.48		V
	Reference voltage	VDDS as reference, input voltage scaling enabled		VDDS		V
	Reference voltage	VDDS as reference, input voltage scaling disabled		VDDS / 2.82(3)		V

Copyright © 2023 Texas Instruments Incorporated

T_c = 25 °C, V_{DDS} = 3.0 V and voltage scaling enabled, unless otherwise noted.(1)
Performance numbers require use of offset and gain adjustements in software by TI-provided ADC drivers.

PARAMETER		TEST CONDITIONS	MIN	TYP	MAX	UNIT
	Input impedance	200 kSamples/s, voltage scaling enabled. Capacitive input, Input impedance depends on sampling frequency and sampling time		>1		MΩ

(1) Using IEEE Std 1241-2010 for terminology and test methods
(2) Input signal scaled down internally before conversion, as if voltage range was 0 to 4.3 V
(3) Applied voltage must be within Absolute Maximum Ratings (see Section 8.1) at all times
(4) No missing codes
(5) ADC_output = $\sum(4^n$ samples) >> n,n = desired extra bits

Copyright © 2023 Texas Instruments Incorporated

8.12.2 DAC

8.12.2.1 Digital-to-Analog Converter (DAC) Characteristics

T_c = 25 °C, V_{DDS} = 3.0 V, unless otherwise noted.

PARAMETER		TEST CONDITIONS	MIN	TYP	MAX	UNIT
General Parameters						
	Resolution			8		Bits
V_{DDS}	Supply voltage	Any load, any V_{REF}, pre-charge OFF, DAC charge-pump ON	1.8		3.63	V
		Any load, V_{REF} = DCOUPL, pre-charge ON	2.6		3.63	
F_{DAC}	Clock frequency	Buffer OFF (internal load)	16		1000	kHz
	Voltage output settling time	V_{REF} = VDDS, buffer OFF, internal load		13		1 / F_{DAC}
Internal Load - Continuous Time Comparator / Low Power Clocked Comparator						
DNL	Differential nonlinearity	V_{REF} = VDDS, load = Continuous Time Comparator or Low Power Clocked Comparator F_{DAC} = 250 kHz		±1		LSB[1]
	Differential nonlinearity	V_{REF} = VDDS, load = Continuous Time Comparator or Low Power Clocked Comparator F_{DAC} = 16 kHz		±1.2		
	Offset error[2] Load = Continuous Time Comparator	V_{REF} = VDDS= 3.63 V		±0.67		LSB[1]
		V_{REF} = VDDS= 3.0 V		±0.81		
		V_{REF} = VDDS = 1.8 V		±1.27		
		V_{REF} = DCOUPL, pre-charge ON		±3.43		
		V_{REF} = DCOUPL, pre-charge OFF		±2.88		
	Offset error[2] Load = Low Power Clocked Comparator	V_{REF} = VDDS = 3.63 V		±0.77		LSB[1]
		V_{REF} = VDDS = 3.0 V		±0.77		
		V_{REF} = VDDS= 1.8 V		±3.46		
		V_{REF} = DCOUPL, pre-charge ON		±3.44		
		V_{REF} = DCOUPL, pre-charge OFF		±4.70		
	Max code output voltage variation[2] Load = Continuous Time Comparator	V_{REF} = VDDS = 3.63 V		±1.61		LSB[1]
		V_{REF} = VDDS = 3.0 V		±1.71		
		V_{REF} = VDDS= 1.8 V		±2.10		
		V_{REF} = DCOUPL, pre-charge ON		±6.00		
		V_{REF} = DCOUPL, pre-charge OFF		±3.85		
	Max code output voltage variation[2] Load = Low Power Clocked Comparator	V_{REF} =VDDS= 3.63 V		±2.92		LSB[1]
		V_{REF} =VDDS= 3.0 V		±3.06		
		V_{REF} = VDDS= 1.8 V		±3.91		
		V_{REF} = DCOUPL, pre-charge ON		±7.84		
		V_{REF} = DCOUPL, pre-charge OFF		±4.06		
	Output voltage range[2] Load = Continuous Time Comparator	V_{REF} = VDDS= 3.63 V, code 1		0.03		V
		V_{REF} = VDDS= 3.63 V, code 255		3.46		
		V_{REF} = VDDS= 3.0 V, code 1		0.02		
		V_{REF} = VDDS= 3.0 V, code 255		2.86		
		V_{REF} = VDDS= 1.8 V, code 1		0.01		
		V_{REF} = VDDS = 1.8 V, code 255		1.71		
		V_{REF} = DCOUPL, pre-charge OFF, code 1		0.01		
		V_{REF} = DCOUPL, pre-charge OFF, code 255		1.21		
		V_{REF} = DCOUPL, pre-charge ON, code 1		1.27		
		V_{REF} = DCOUPL, pre-charge ON, code 255		2.46		

Copyright © 2023 Texas Instruments Incorporated

T_c = 25 °C, V_{DDS} = 3.0 V, unless otherwise noted.

PARAMETER		TEST CONDITIONS	MIN	TYP	MAX	UNIT
	Output voltage range(2) Load = Low Power Clocked Comparator	V_{REF} = VDDS= 3.63 V, code 1		0.03		V
		V_{REF} = VDDS= 3.63 V, code 255		3.46		
		V_{REF} = VDDS= 3.0 V, code 1		0.02		
		V_{REF} = VDDS= 3.0 V, code 255		2.85		
		V_{REF} = VDDS = 1.8 V, code 1		0.01		
		V_{REF} = VDDS = 1.8 V, code 255		1.71		
		V_{REF} = DCOUPL, pre-charge OFF, code 1		0.01		
		V_{REF} = DCOUPL, pre-charge OFF, code 255		1.21		
		V_{REF} = DCOUPL, pre-charge ON, code 1		1.27		
		V_{REF} = DCOUPL, pre-charge ON, code 255		2.46		

(1) 1 LSB (V_{REF} 3.63 V/3.0 V/1.8 V/DCOUPL/ADCREF) = 13.44 mV/11.13 mV/6.68 mV/4.67 mV/5.48 mV
(2) Includes comparator offset

Copyright © 2023 Texas Instruments Incorporated

8.12.3 Temperature and Battery Monitor

8.12.3.1 Temperature Sensor

Measured on the CC26x2REM-7ID-Q1 reference design with T_c = 25 °C, V_{DDS} = 3.0 V, unless otherwise noted. All measurements are applicable to both RTC and RGZ packages, unless otherwise noted.

PARAMETER	TEST CONDITIONS	MIN	TYP	MAX	UNIT
Resolution			2		°C
Accuracy	-40 °C to 0 °C		±4.0		°C
Accuracy	0 °C to 105 °C		±2.5		°C
Supply voltage coefficient(1)	Applicable to RTC package		3.6		°C/V
Supply voltage coefficient(1)	Applicable to RGZ package		4.1		°C/V

(1) The temperature sensor is automatically compensated for VDDS variation when using the TI-provided driver.

8.12.3.2 Battery Monitor

Measured on the CC26x2REM-7ID-Q1 reference design with T_c = 25 °C, unless otherwise noted.

PARAMETER	TEST CONDITIONS	MIN	TYP	MAX	UNIT
Resolution			25		mV
Range		1.8		3.63	V
Integral nonlinearity (max)			28	72	mV
Accuracy	VDDS = 3.0 V		22.5		mV
Offset error			-32		mV
Gain error			-1.3		%

Copyright © 2023 Texas Instruments Incorporated

8.12.4 Comparators

8.12.4.1 Continuous Time Comparator

T_c = 25°C, V_{DDS} = 3.0 V, unless otherwise noted.

PARAMETER	TEST CONDITIONS	MIN	TYP	MAX	UNIT
Input voltage range(1)		0		V_{DDS}	V
Offset	Measured at V_{DDS} / 2		±5		mV
Decision time	Step from –10 mV to 10 mV		0.78		µs
Current consumption	Internal reference		8.6		µA

(1) The input voltages can be generated externally and connected throughout I/Os or an internal reference voltage can be generated using the DAC

8.12.4.2 Low-Power Clocked Comparator

T_c = 25 °C, V_{DDS} = 3.0 V, unless otherwise noted.

PARAMETER	TEST CONDITIONS	MIN	TYP	MAX	UNIT
Input voltage range		0		V_{DDS}	V
Clock frequency			SCLK_LF		
Internal reference voltage(1)	Using internal DAC with VDDS as reference voltage, DAC code = 0 - 255		0.024 - 2.865		V
Offset	Measured at V_{DDS} / 2, includes error from internal DAC			±5	mV
Decision time	Step from –50 mV to 50 mV			1	Clock Cycle

(1) The comparator can use an internal 8 bits DAC as its reference. The DAC output voltage range depends on the reference voltage selected. See DAC Characteristics

8.12.5 Current Source

8.12.5.1 Programmable Current Source

T_c = 25 °C, V_{DDS} = 3.0 V, unless otherwise noted.

PARAMETER	TEST CONDITIONS	MIN	TYP	MAX	UNIT
Current source programmable output range (logarithmic range)			0.25 - 20		µA
Resolution			0.25		µA

Copyright © 2023 Texas Instruments Incorporated

8.12.6 GPIO

8.12.6.1 GPIO DC Characteristics

PARAMETER	TEST CONDITIONS	MIN	TYP	MAX	UNIT
T_A = 25 °C, V_{DDS} = 1.8 V					
GPIO VOH at 8 mA load	IOCURR = 2, high-drive GPIOs only	1.44			V
GPIO VOL at 8 mA load	IOCURR = 2, high-drive GPIOs only			0.36	V
GPIO VOH at 4 mA load	IOCURR = 1	1.44			V
GPIO VOL at 4 mA load	IOCURR = 1			0.36	V
GPIO pullup current	Input mode, pullup enabled, Vpad = 0 V	32	68	110	µA
GPIO pulldown current	Input mode, pulldown enabled, Vpad = VDDS	11	18.5	39	µA
GPIO low-to-high input transition, with hysteresis	IH = 1, transition voltage for input read as 0 → 1	0.72	1.08	1.17	V
GPIO high-to-low input transition, with hysteresis	IH = 1, transition voltage for input read as 1 → 0	0.54	0.72	0.87	V
GPIO input hysteresis	IH = 1, difference between 0 → 1 and 1 → 0 points	0.18	0.36	0.51	V
GPIO minimum VIH	Lowest GPIO input voltage reliably interpreted as *High*	1.17			V
GPIO maximum VIL	Highest GPIO Input voltage reliably interpreted as *Low*			0.63	V
T_A = 25 °C, V_{DDS} = 3.0 V					
GPIO VOH at 8 mA load	IOCURR = 2, high-drive GPIOs only	2.4			V
GPIO VOL at 8 mA load	IOCURR = 2, high-drive GPIOs only			0.6	V
GPIO VOH at 4 mA load	IOCURR = 1	2.4			V
GPIO VOL at 4 mA load	IOCURR = 1			0.6	V
T_A = 25 °C, V_{DDS} = 3.63 V					
GPIO VOH at 8 mA load	IOCURR = 2, high-drive GPIOs only	2.9			V
GPIO VOL at 8 mA load	IOCURR = 2, high-drive GPIOs only			0.6	V
GPIO VOH at 4 mA load	IOCURR = 1	2.9			V
GPIO VOL at 4 mA load	IOCURR = 1			0.6	V
GPIO pullup current	Input mode, pullup enabled, Vpad = 0 V	135	264	380	µA
GPIO pulldown current	Input mode, pulldown enabled, Vpad = VDDS	64	102	178	µA
GPIO low-to-high input transition, with hysteresis	IH = 1, transition voltage for input read as 0 → 1	1.52	1.90	2.21	V
GPIO high-to-low input transition, with hysteresis	IH = 1, transition voltage for input read as 1 → 0	1.14	1.48	1.83	V
GPIO input hysteresis	IH = 1, difference between 0 → 1 and 1 → 0 points	0.38	0.42	1.07	V
GPIO minimum VIH	Lowest GPIO input voltage reliably interpreted as a *High*	2.47			V
GPIO maximum VIL	Highest GPIO input voltage reliably interpreted as a *Low*			1.33	V

Copyright © 2023 Texas Instruments Incorporated

8.13 Typical Characteristics

All measurements in this section are done with T_c = 25 °C and V_{DDS} = 3.0 V, unless otherwise noted. See 节 8.3 for device limits. Values exceeding these limits are for reference only.

8.13.1 MCU Current

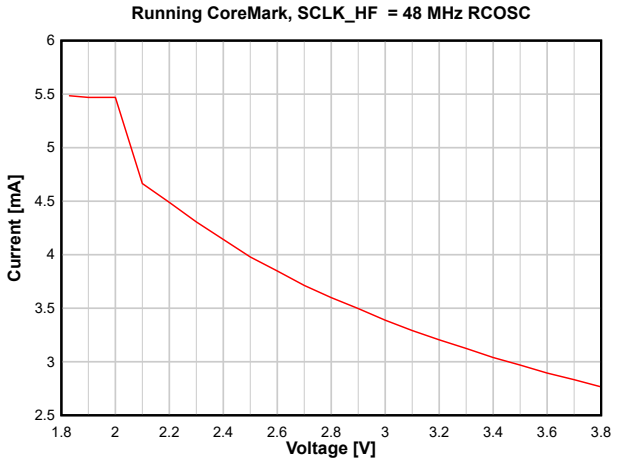

图 8-4. Active Mode (MCU) Current vs. Supply Voltage (VDDS)

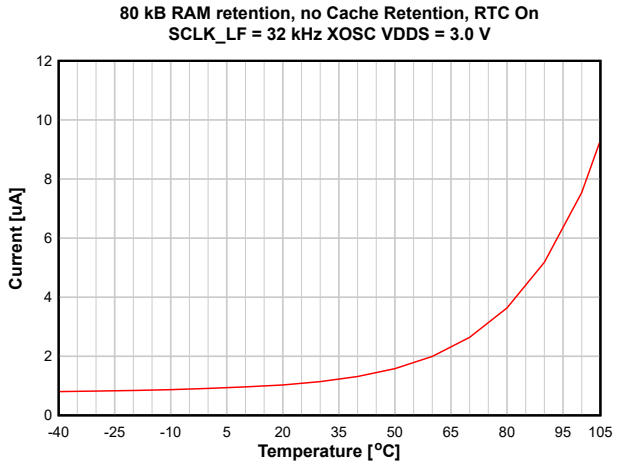

图 8-5. Standby Mode (MCU) Current vs. Temperature

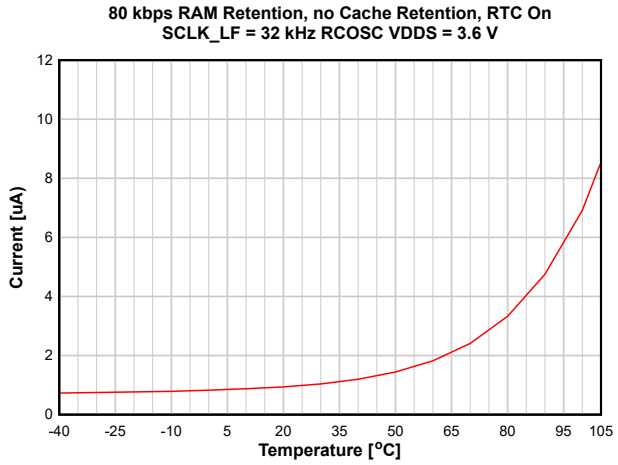

图 8-6. Standby Mode (MCU) Current vs. Temperature (VDDS = 3.6 V)

Copyright © 2023 Texas Instruments Incorporated

8.13.2 RX Current

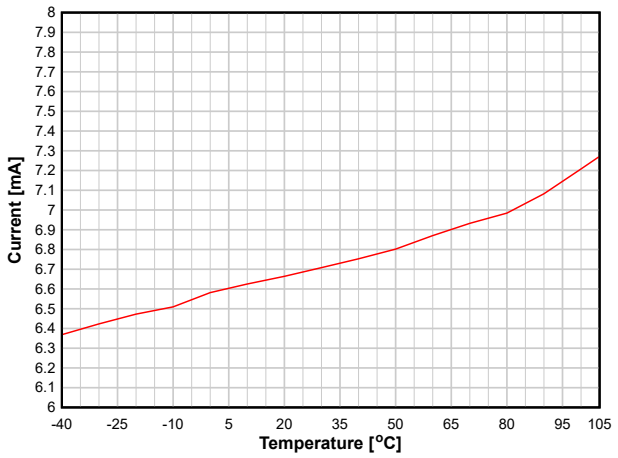

图 8-7. RX Current versus Temperature (BLE 1 Mbps, 2.44 GHz)

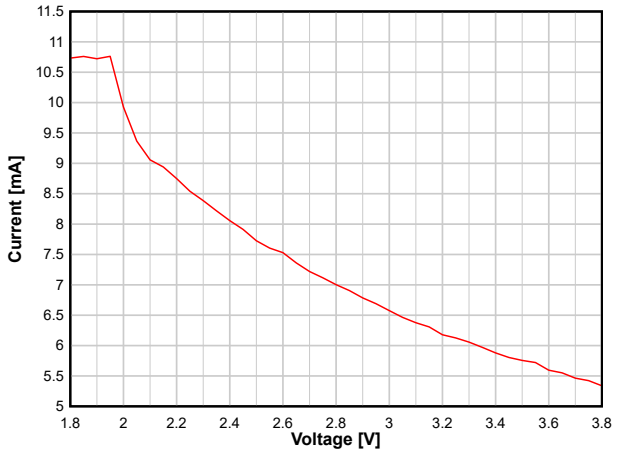

图 8-8. RX Current versus Supply Voltage (VDDS) (BLE 1 Mbps, 2.44 GHz)

Copyright © 2023 Texas Instruments Incorporated

8.13.3 TX Current

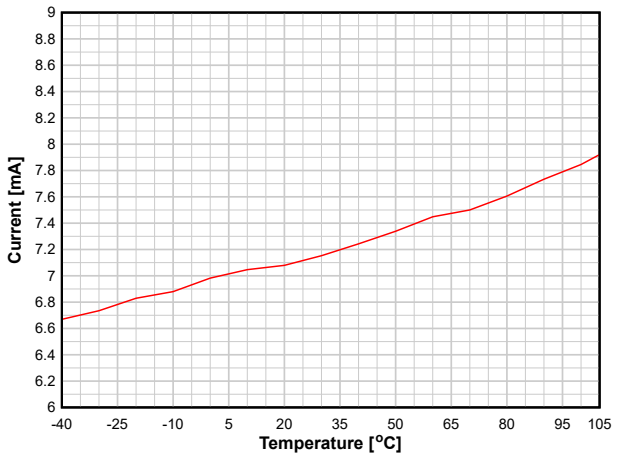

图 8-9. TX Current vs. Temperature (BLE 1 Mbps, 2.44 GHz, 0 dBm)

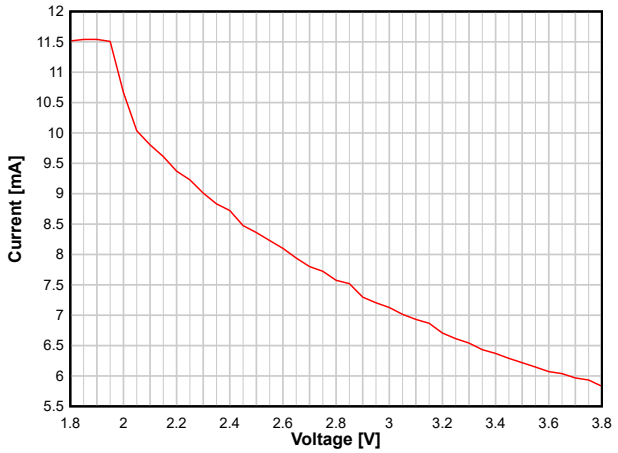

图 8-10. TX Current vs. Supply Voltage (VDDS) (BLE 1 Mbps, 2.44 GHz, 0 dBm)

表 8-1 shows typical TX current and output power for different output power settings.

表 8-1. Typical TX Current and Output Power

CC2642R-Q1 at 2.4 GHz, VDDS = 3.0 V (Measured on CC2652REM-7ID-Q1)			
txPower	**TX Power Setting (SmartRF Studio)**	**Typical Output Power [dBm]**	**Typical Current Consumption [mA]**
0x8623	5	5.0	9.2
0x5E1A	4	4.1	8.6
0x7217	3.5	3.6	8.8
0x4867	3	3.2	8.2
0x3860	2	2.0	7.6
0x2E5C	1	1.2	7.3
0x2E59	0	0.3	7.0
0x2853	-2	-2.2	6.8
0x10D9	-5	-5.0	5.9
0x0AD1	-10	-9.5	5.3
0x0ACC	-15	-13.7	4.9
0x0AC8	-20	-18.6	4.6

Copyright © 2023 Texas Instruments Incorporated

8.13.4 RX Performance

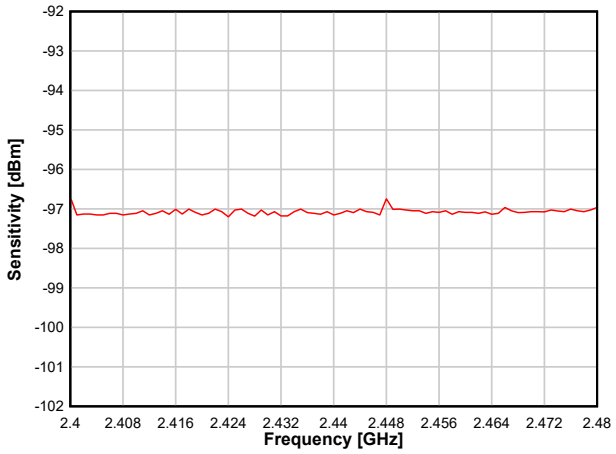

图 8-11. Sensitivity versus Frequency (BLE 1 Mpbs, 2.44 GHz)

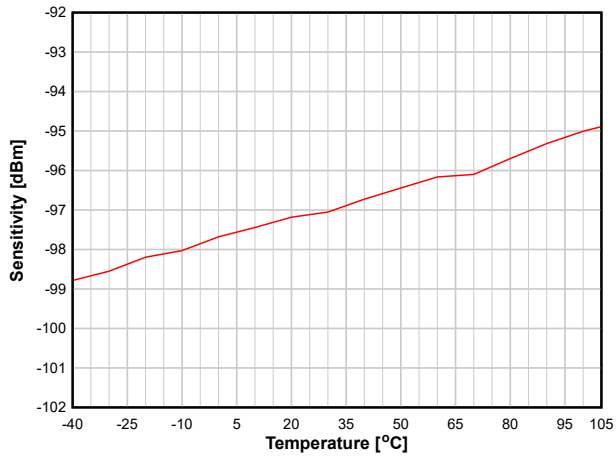

图 8-12. Sensitivity vs. Temperature (BLE 1 Mbps, 2.44 GHz)

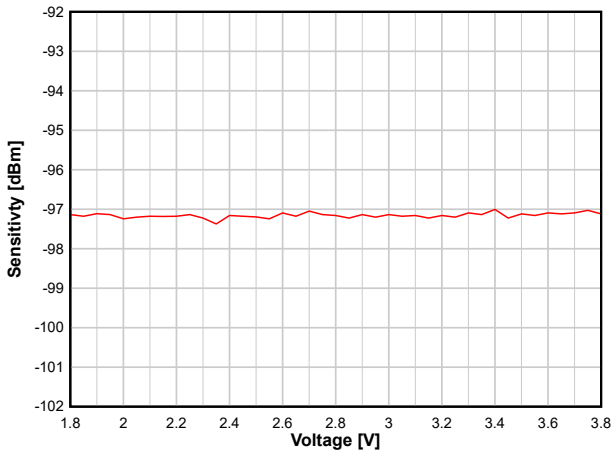

图 8-13. Sensitivity vs. Supply Voltage (VDDS) (BLE 1 Mbps, 2.44 GHz)

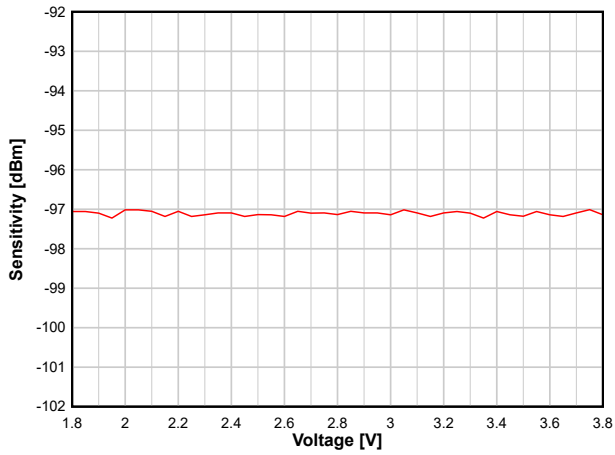

图 8-14. Sensitivity vs. Supply Voltage (VDDS) (BLE 1 Mbps, 2.44 GHz, DCDC Off)

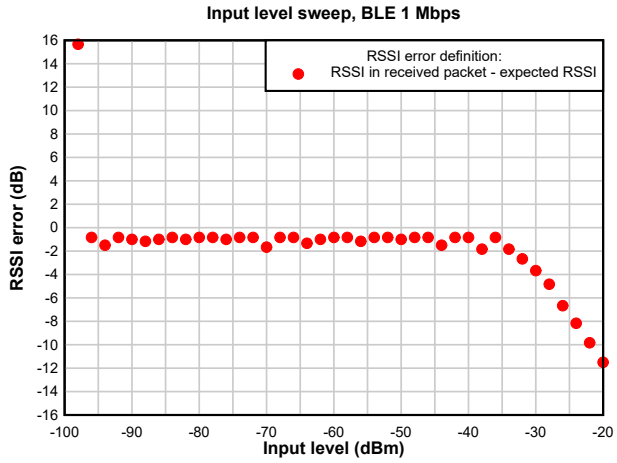

图 8-15. RSSI Error vs. Input Level (dBm)

Copyright © 2023 Texas Instruments Incorporated

8.13.5 TX Performance

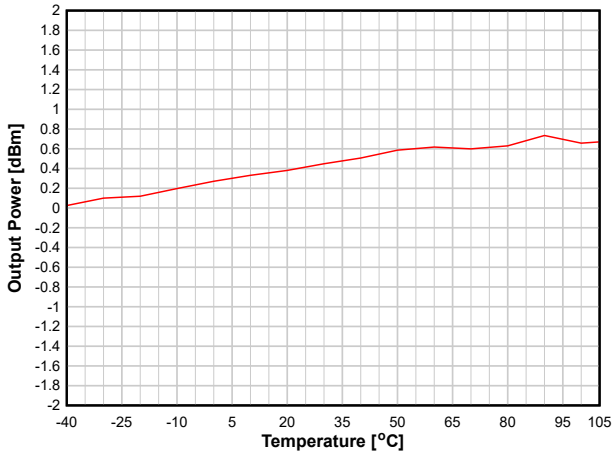

图 8-16. Output Power vs. Temperature(BLE 1 Mbps, 2.44 GHz, 0dBm)

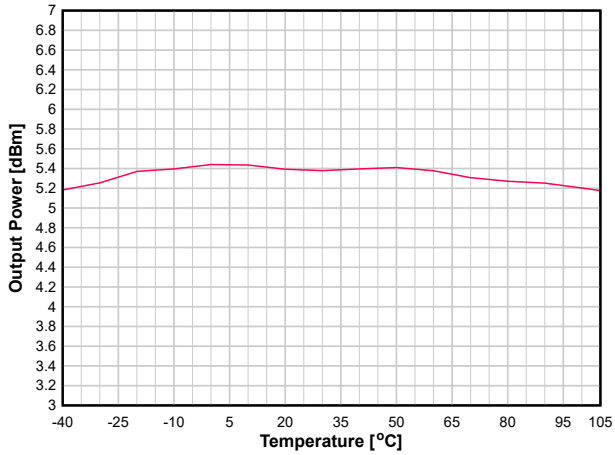

图 8-17. Output Power vs. Temperature (BLE 1 Mbps, 2.44 GHz, +5dBm)

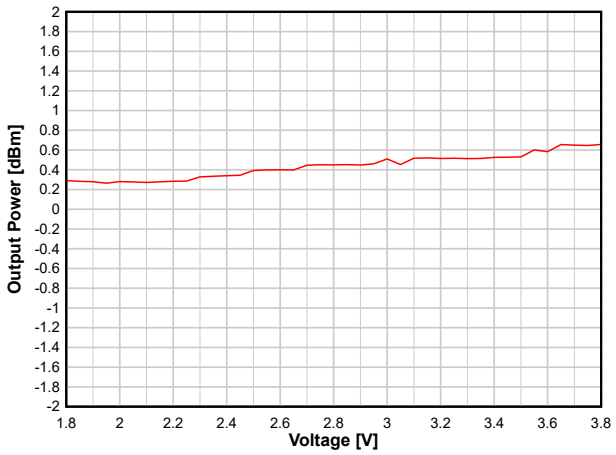

图 8-18. Output Power vs. Supply Voltage (VDDS) (BLE 1 Mbps, 2.44 GHz, 0dBm)

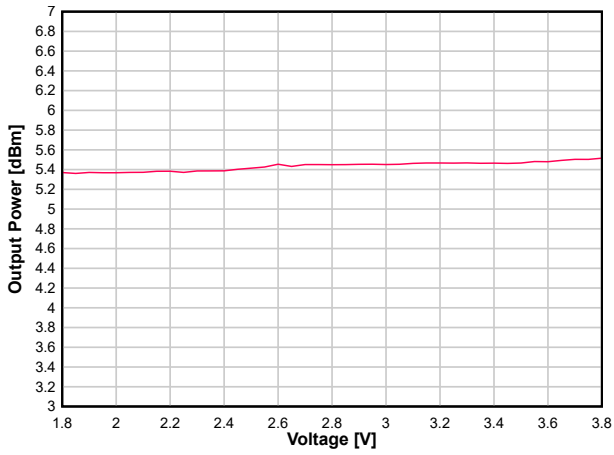

图 8-19. Output Power vs. Supply Voltage (VDDS) (BLE 1 Mbps, 2.44 GHz, +5dBm)

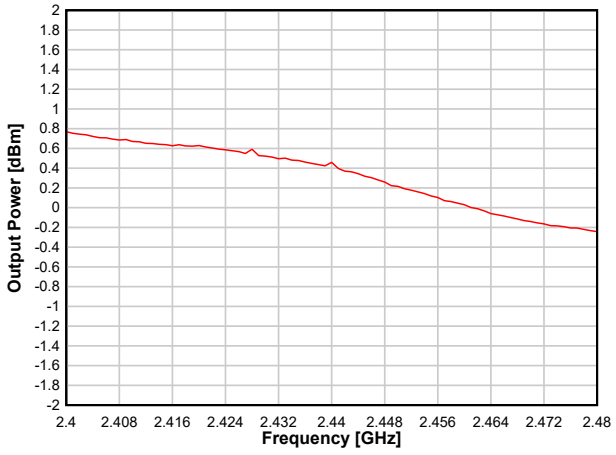

图 8-20. Output Power vs. Frequency (BLE 1 Mbps, 0dBm)

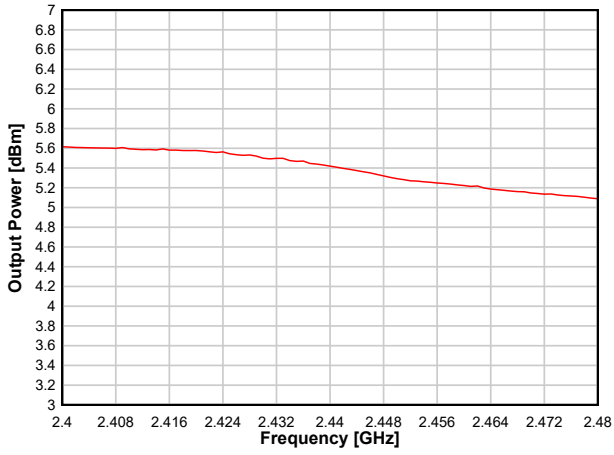

图 8-21. Output Power vs. Frequency (BLE 1 Mbps, +5dBm)

Copyright © 2023 Texas Instruments Incorporated

8.13.6 ADC Performance

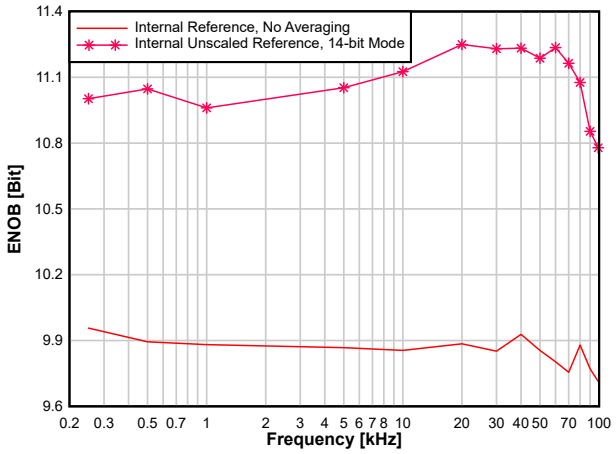

图 8-22. ENOB versus Input Frequency

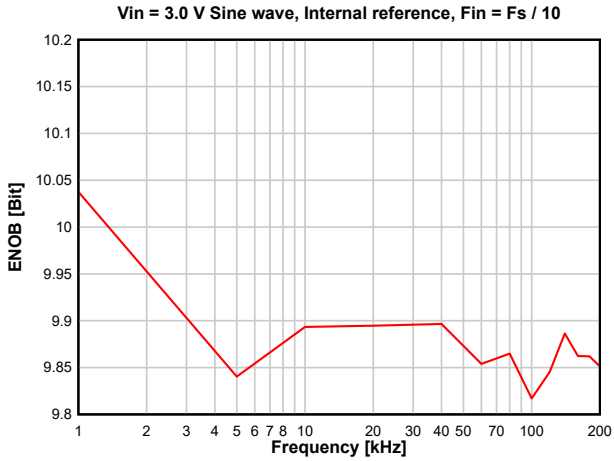

图 8-23. ENOB versus Sampling Frequency

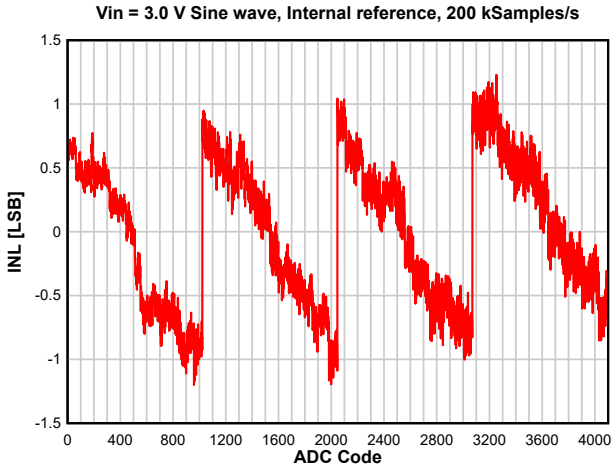

图 8-24. INL versus ADC Code

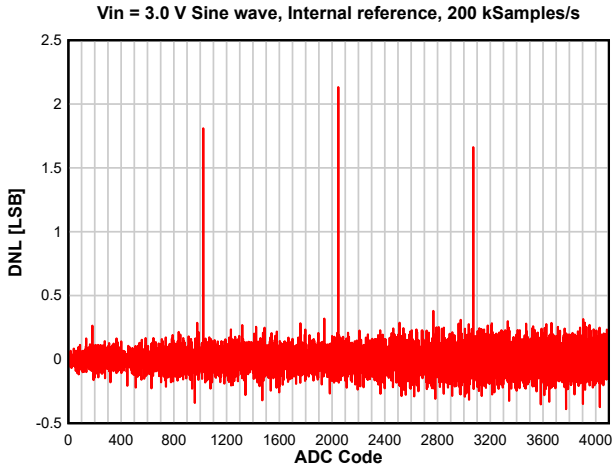

图 8-25. DNL versus ADC Code

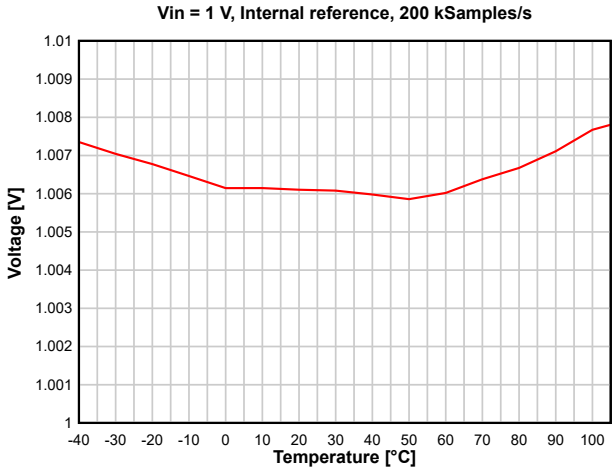

图 8-26. ADC Accuracy versus Temperature

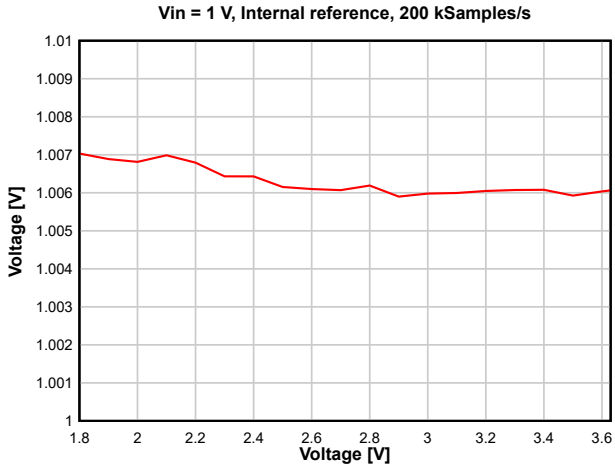

图 8-27. ADC Accuracy versus VDDS

Copyright © 2023 Texas Instruments Incorporated

9 Detailed Description

9.1 Overview

图 4-1 shows the core modules of the CC2642R-Q1 device.

9.2 System CPU

The CC2642R-Q1 SimpleLink™ Wireless MCU contains an Arm® Cortex®-M4F system CPU, which runs the application and the higher layers of the Bluetooth 5 low energy radio protocol stack.

The system CPU is the foundation of a high-performance, low-cost platform that meets the system requirements of minimal memory implementation, and low-power consumption, while delivering outstanding computational performance and exceptional system response to interrupts.

Its features include the following:

- ARMv7-M architecture optimized for small-footprint embedded applications
- Arm Thumb®-2 mixed 16- and 32-bit instruction set delivers the high performance expected of a 32-bit Arm core in a compact memory size
- Fast code execution permits increased sleep mode time
- Deterministic, high-performance interrupt handling for time-critical applications
- Single-cycle multiply instruction and hardware divide
- Hardware division and fast digital-signal-processing oriented multiply accumulate
- Saturating arithmetic for signal processing
- IEEE 754-compliant single-precision Floating Point Unit (FPU)
- Memory Protection Unit (MPU) for safety-critical applications
- Full debug with data matching for watchpoint generation
  - Data Watchpoint and Trace Unit (DWT)
  - JTAG Debug Access Port (DAP)
  - Flash Patch and Breakpoint Unit (FPB)
- Trace support reduces the number of pins required for debugging and tracing
  - Instrumentation Trace Macrocell Unit (ITM)
  - Trace Port Interface Unit (TPIU) with asynchronous serial wire output (SWO)
- Optimized for single-cycle flash memory access
- Tightly connected to 8-KB 4-way random replacement cache for minimal active power consumption and wait states
- Ultra-low-power consumption with integrated sleep modes
- 48 MHz operation
- 1.25 DMIPS per MHz

Copyright © 2023 Texas Instruments Incorporated

9.3 Radio (RF Core)

The RF Core is a highly flexible and future proof radio module which contains an Arm Cortex-M0 processor that interfaces the analog RF and base-band circuitry, handles data to and from the system CPU side, and assembles the information bits in a given packet structure. The RF Core offers a high level, command-based API to the main CPU that configurations and data are passed through. The Arm Cortex-M0 processor is not programmable by customers and is interfaced through the TI-provided RF driver that is included with the SimpleLink Software Development Kit (SDK).

The RF Core can autonomously handle the time-critical aspects of the radio protocols, thus offloading the main CPU, which reduces power consumption and leaves more resources for the user application. Several signals are also available to control external circuitry such as RF switches or range extenders autonomously.

The various physical layer radio formats are partly built as a software defined radio where the radio behavior is either defined by radio ROM contents or by non-ROM radio formats delivered in form of firmware patches with the SimpleLink SDKs. This allows the radio platform to be updated for support of future versions of standards even with over-the-air (OTA) upgrades while still using the same silicon.

9.3.1 Bluetooth 5 low energy

The RF Core offers full support for Bluetooth 5 low energy, including the high-speed 2-Mbps physical layer and the 500-kbps and 125-kbps long range PHYs (Coded PHY) through the TI provided Bluetooth 5 stack or through a high-level Bluetooth API. The Bluetooth 5 PHY and part of the controller are in radio and system ROM, providing significant savings in memory usage and more space available for applications.

The new high-speed mode allows data transfers up to 2 Mbps, twice the speed of Bluetooth 4.2 and five times the speed of Bluetooth 4.0, without increasing power consumption. In addition to faster speeds, this mode offers significant improvements for energy efficiency and wireless coexistence with reduced radio communication time.

Bluetooth 5 also enables unparalleled flexibility for adjustment of speed and range based on application needs, which capitalizes on the high-speed or long-range modes respectively. Data transfers are now possible at 2 Mbps, enabling development of applications using voice, audio, imaging, and data logging that were not previously an option using Bluetooth low energy. With high-speed mode, existing applications deliver faster responses, richer engagement, and longer battery life. Bluetooth 5 enables fast, reliable firmware updates.

Copyright © 2023 Texas Instruments Incorporated

9.4 Memory

The up to 352-KB nonvolatile (Flash) memory provides storage for code and data. The flash memory is in-system programmable and erasable. The last flash memory sector must contain a Customer Configuration section (CCFG) that is used by boot ROM and TI provided drivers to configure the device. This configuration is done through the ccfg.c source file that is included in all TI provided examples.

The ultra-low leakage system static RAM (SRAM) is split into up to five 16-KB blocks and can be used for both storage of data and execution of code. Retention of SRAM contents in Standby power mode is enabled by default and included in Standby mode power consumption numbers. Parity checking for detection of bit errors in memory is built-in, which reduces chip-level soft errors and thereby increases reliability. System SRAM is always initialized to zeroes upon code execution from boot.

To improve code execution speed and lower power when executing code from nonvolatile memory, a 4-way nonassociative 8-KB cache is enabled by default to cache and prefetch instructions read by the system CPU. The cache can be used as a general-purpose RAM by enabling this feature in the Customer Configuration Area (CCFG).

There is a 4-KB ultra-low leakage SRAM available for use with the Sensor Controller Engine which is typically used for storing Sensor Controller programs, data and configuration parameters. This RAM is also accessible by the system CPU. The Sensor Controller RAM is not cleared to zeroes between system resets.

The ROM includes a TI-RTOS kernel and low-level drivers, as well as significant parts of selected radio stacks, which frees up flash memory for the application. The ROM also contains a serial (SPI and UART) bootloader that can be used for initial programming of the device.

Copyright © 2023 Texas Instruments Incorporated

9.5 Sensor Controller

The Sensor Controller contains circuitry that can be selectively enabled in both Standby and Active power modes. The peripherals in this domain can be controlled by the Sensor Controller Engine, which is a proprietary power-optimized CPU. This CPU can read and monitor sensors or perform other tasks autonomously; thereby significantly reducing power consumption and offloading the system CPU.

The Sensor Controller Engine is user programmable with a simple programming language that has a syntax similar to C. This programmability allows for sensor polling and other tasks to be specified as sequential algorithms rather than static configuration of complex peripheral modules, timers, DMA, register programmable state machines, or event routing.

The main advantages are:

- Flexibility - data can be read and processed in unlimited manners while still ensuring ultra-low power
- 2 MHz low-power mode enables lowest possible handling of digital sensors
- Dynamic reuse of hardware resources
- 40-bit accumulator supporting multiplication, addition and shift
- Observability and debugging options

Sensor Controller Studio is used to write, test, and debug code for the Sensor Controller. The tool produces C driver source code, which the System CPU application uses to control and exchange data with the Sensor Controller. Typical use cases may be (but are not limited to) the following:

- Read analog sensors using integrated ADC or comparators
- Interface digital sensors using GPIOs, SPI, UART, or I^2C (I^2C and I^2C are bit-banged)
- Capacitive sensing
- Waveform generation
- Very low-power pulse counting (flow metering)
- Key scan

The Sensor Controller peripherals include the following:

- The low-power clocked comparator can be used to wake the system CPU from any state in which the comparator is active. A configurable internal reference DAC can be used in conjunction with the comparator. The output of the comparator can also be used to trigger an interrupt or the ADC.
- Capacitive sensing functionality is implemented through the use of a constant current source, a time-to-digital converter, and a comparator. The continuous time comparator in this block can also be used as a higher-accuracy alternative to the low-power clocked comparator. The Sensor Controller takes care of baseline tracking, hysteresis, filtering, and other related functions when these modules are used for capacitive sensing.
- The ADC is a 12-bit, 200-ksamples/s ADC with eight inputs and a built-in voltage reference. The ADC can be triggered by many different sources including timers, I/O pins, software, and comparators.
- The analog modules can connect to up to eight different GPIOs
- Dedicated SPI Controller with up to 6 MHz clock speed

The Sensor Controller peripherals can also be controlled from the main application processor.

Copyright © 2023 Texas Instruments Incorporated

9.6 Cryptography

The CC2642R-Q1 device comes with a wide set of modern cryptography-related hardware accelerators, drastically reducing code footprint and execution time for cryptographic operations. It also has the benefit of being lower power and improves availability and responsiveness of the system because the cryptography operations runs in a background hardware thread.
Together with a large selection of open-source cryptography libraries provided with the Software Development Kit (SDK), this allows for secure and future proof IoT applications to be easily built on top of the platform. The hardware accelerator modules are:

- **True Random Number Generator (TRNG)** module provides a true, nondeterministic noise source for the purpose of generating keys, initialization vectors (IVs), and other random number requirements. The TRNG is built on 24 ring oscillators that create unpredictable output to feed a complex nonlinear-combinatorial circuit.
- **Secure Hash Algorithm 2 (SHA-2)** with support for SHA224, SHA256, SHA384, and SHA512
- **Advanced Encryption Standard (AES)** with 128 and 256 bit key lengths
- **Public Key Accelerator** - Hardware accelerator supporting mathematical operations needed for elliptic curves up to 512 bits and RSA key pair generation up to 1024 bits.

Through use of these modules and the TI provided cryptography drivers, the following capabilities are available for an application or stack:

- **Key Agreement Schemes**
  - Elliptic curve Diffie – Hellman with static or ephemeral keys (ECDH and ECDHE)
  - Elliptic curve Password Authenticated Key Exchange by Juggling (ECJ-PAKE)
- **Signature Generation**
  - Elliptic curve Diffie-Hellman Digital Signature Algorithm (ECDSA)
- **Curve Support**
  - Short Weierstrass form (full hardware support), such as:
    - NIST-P224, NIST-P256, NIST-P384, NIST-P521
    - Brainpool-256R1, Brainpool-384R1, Brainpool-512R1
    - secp256r1
  - Montgomery form (hardware support for multiplication), such as:
    - Curve25519
- **SHA2 based MACs**
  - HMAC with SHA224, SHA256, SHA384, or SHA512
- Block cipher mode of operation
  - AESCCM
  - AESGCM
  - AESECB
  - AESCBC
  - AESCBC-MAC
- **True random number generation**

Other capabilities, such as RSA encryption and signatures as well as Edwards type of elliptic curves such as Curve1174 or Ed25519, can also be implemented using the provided hardware accelerators but are not part of the TI SimpleLink SDK for the CC2642R-Q1 device.

Copyright © 2023 Texas Instruments Incorporated

9.7 Timers

A large selection of timers are available as part of the CC2642R-Q1 device. These timers are:

- **Real-Time Clock (RTC)**

  A 70-bit 3-channel timer running on the 32 kHz low frequency system clock (SCLK_LF)
  This timer is available in all power modes except Shutdown. The timer can be calibrated to compensate for frequency drift when using the RCOSC_LF as the low frequency system clock. If an external LF clock with frequency different from 32.768 kHz is used, the RTC tick speed can be adjusted to compensate for this. When using TI-RTOS, the RTC is used as the base timer in the operating system and should thus only be accessed through the kernel APIs such as the Clock module. The real time clock can also be read by the Sensor Controller Engine to timestamp sensor data and also has dedicated capture channels. By default, the RTC halts when a debugger halts the device.
- **General-Purpose Timers (GPTIMER)**

  The four flexible GPTIMERs can be used as either 4× 32 bit timers or 8× 16 bit timers, all running on up to 48 MHz. Each of the 16- or 32-bit timers support a wide range of features such as one-shot or periodic counting, pulse width modulation (PWM), time counting between edges and edge counting. The inputs and outputs of the timer are connected to the device event fabric, which allows the timers to interact with signals such as GPIO inputs, other timers, DMA and ADC. The GPTIMERs are available in Active and Idle power modes.
- **Sensor Controller Timers**

  The Sensor Controller contains 3 timers:

  AUX Timer 0 and 1 are 16-bit timers with a 2^N prescaler. Timers can either increment on a clock or on each edge of a selected tick source. Both one-shot and periodical timer modes are available.

  AUX Timer 2 is a 16-bit timer that can operate at 24 MHz, 2 MHz or 32 kHz independent of the Sensor Controller functionality. There are 4 capture or compare channels, which can be operated in one-shot or periodical modes. The timer can be used to generate events for the Sensor Controller Engine or the ADC, as well as for PWM output or waveform generation.
- **Radio Timer**

  A multichannel 32-bit timer running at 4 MHz is available as part of the device radio. The radio timer is typically used as the timing base in wireless network communication using the 32-bit timing word as the network time. The radio timer is synchronized with the RTC by using a dedicated radio API when the device radio is turned on or off. This ensures that for a network stack, the radio timer seems to always be running when the radio is enabled. The radio timer is in most cases used indirectly through the trigger time fields in the radio APIs and should only be used when running the accurate 48 MHz high frequency crystal as the source of SCLK_HF.
- **Watchdog timer**

  The watchdog timer is used to regain control if the system operates incorrectly due to software errors. It is typically used to generate an interrupt to and reset of the device for the case where periodic monitoring of the system components and tasks fails to verify proper functionality. The watchdog timer runs on a 1.5 MHz clock rate and cannot be stopped once enabled. The watchdog timer pauses to run in Standby power mode and when a debugger halts the device.

Copyright © 2023 Texas Instruments Incorporated

9.8 Serial Peripherals and I/O

The SSIs are synchronous serial interfaces that are compatible with SPI, MICROWIRE, and TI's synchronous serial interfaces. The SSIs support both SPI Controller and Peripheral up to 4 MHz. The SSI modules support configurable phase and polarity.

The UARTs implement universal asynchronous receiver and transmitter functions. They support flexible baud-rate generation up to a maximum of 3 Mbps.

The I^2S interface is used to handle digital audio and can also be used to interface pulse-density modulation microphones (PDM).

The I^2C interface is also used to communicate with devices compatible with the I^2C standard. The I^2C interface can handle 100 kHz and 400 kHz operation, and can serve as both Controller and Target.

The I/O controller (IOC) controls the digital I/O pins and contains multiplexer circuitry to allow a set of peripherals to be assigned to I/O pins in a flexible manner. All digital I/Os are interrupt and wake-up capable, have a programmable pullup and pulldown function, and can generate an interrupt on a negative or positive edge (configurable). When configured as an output, pins can function as either push-pull or open-drain. Five GPIOs have high-drive capabilities, which are marked in **bold** in 节 7. All digital peripherals can be connected to any digital pin on the device.

For more information, see the CC13x2, CC26x2 SimpleLink™ Wireless MCU Technical Reference Manual.

9.9 Battery and Temperature Monitor

A combined temperature and battery voltage monitor is available in the CC2642R-Q1 device. The battery and temperature monitor allows an application to continuously monitor on-chip temperature and supply voltage and respond to changes in environmental conditions as needed. The module contains window comparators to interrupt the system CPU when temperature or supply voltage go outside defined windows. These events can also be used to wake up the device from Standby mode through the Always-On (AON) event fabric.

9.10 µDMA

The device includes a direct memory access (µDMA) controller. The µDMA controller provides a way to offload data-transfer tasks from the system CPU, thus allowing for more efficient use of the processor and the available bus bandwidth. The µDMA controller can perform a transfer between memory and peripherals. The µDMA controller has dedicated channels for each supported on-chip module and can be programmed to automatically perform transfers between peripherals and memory when the peripheral is ready to transfer more data.

Some features of the µDMA controller include the following (this is not an exhaustive list):

- Highly flexible and configurable channel operation of up to 32 channels
- Transfer modes: memory-to-memory, memory-to-peripheral, peripheral-to-memory, and peripheral-to-peripheral
- Data sizes of 8, 16, and 32 bits
- Ping-pong mode for continuous streaming of data

9.11 Debug

The on-chip debug support is done through a dedicated cJTAG (IEEE 1149.7) or JTAG (IEEE 1149.1) interface. The device boots by default into cJTAG mode and must be reconfigured to use 4-pin JTAG.

Copyright © 2023 Texas Instruments Incorporated

9.12 Power Management

To minimize power consumption, the CC2642R-Q1 supports a number of power modes and power management features (see 表 9-1).

表 9-1. Power Modes

MODE	SOFTWARE CONFIGURABLE POWER MODES				RESET PIN HELD
	ACTIVE	IDLE	STANDBY	SHUTDOWN	
CPU	Active	Off	Off	Off	Off
Flash	On	Available	Off	Off	Off
SRAM	On	On	Retention	Off	Off
Radio	Available	Available	Off	Off	Off
Supply System	On	On	Duty Cycled	Off	Off
Register and CPU retention	Full	Full	Partial	No	No
SRAM retention	Full	Full	Full	No	No
48 MHz high-speed clock (SCLK_HF)	XOSC_HF or RCOSC_HF	XOSC_HF or RCOSC_HF	Off	Off	Off
2 MHz medium-speed clock (SCLK_MF)	RCOSC_MF	RCOSC_MF	Available	Off	Off
32 kHz low-speed clock (SCLK_LF)	XOSC_LF or RCOSC_LF	XOSC_LF or RCOSC_LF	XOSC_LF or RCOSC_LF	Off	Off
Peripherals	Available	Available	Off	Off	Off
Sensor Controller	Available	Available	Available	Off	Off
Wake-up on RTC	Available	Available	Available	Off	Off
Wake-up on pin edge	Available	Available	Available	Available	Off
Wake-up on reset pin	On	On	On	On	On
Brownout detector (BOD)	On	On	Duty Cycled	Off	Off
Power-on reset (POR)	On	On	On	Off	Off
Watchdog timer (WDT)	Available	Available	Paused	Off	Off

In **Active** mode, the application system CPU is actively executing code. Active mode provides normal operation of the CPU and all of the peripherals that are currently enabled. The system clock can be any available clock source (see 表 9-1).

In **Idle** mode, all active peripherals can be clocked, but the Application CPU core and memory are not clocked and no code is executed. Any interrupt event brings the processor back into active mode.

In **Standby** mode, only the always-on (AON) domain is active. An external wake-up event, RTC event, or Sensor Controller event is required to bring the device back to active mode. MCU peripherals with retention do not need to be reconfigured when waking up again, and the CPU continues execution from where it went into standby mode. All GPIOs are latched in standby mode.

In **Shutdown** mode, the device is entirely turned off (including the AON domain and Sensor Controller), and the I/Os are latched with the value they had before entering shutdown mode. A change of state on any I/O pin defined as a *wake from shutdown pin* wakes up the device and functions as a reset trigger. The CPU can differentiate between reset in this way and reset-by-reset pin or power-on reset by reading the reset status register. The only state retained in this mode is the latched I/O state and the flash memory contents.

Copyright © 2023 Texas Instruments Incorporated

The Sensor Controller is an autonomous processor that can control the peripherals in the Sensor Interface independently of the system CPU. This means that the system CPU does not have to wake up, for example to perform an ADC sampling or poll a digital sensor over SPI, thus saving both current and wake-up time that would otherwise be wasted. The Sensor Controller Studio tool enables the user to program the Sensor Controller, control its peripherals, and wake up the system CPU as needed. All Sensor Controller peripherals can also be controlled by the system CPU.

备注

The power, RF and clock management for the CC2642R-Q1 device require specific configuration and handling by software for optimized performance. This configuration and handling is implemented in the TI-provided drivers that are part of the CC2642R-Q1 software development kit (SDK). Therefore, TI highly recommends using this software framework for all application development on the device. The complete SDK with TI-RTOS, device drivers, and examples are offered free of charge in source code.

9.13 Clock Systems

The CC2642R-Q1 device has several internal system clocks.

The 48 MHz SCLK_HF is used as the main system (MCU and peripherals) clock. This can be driven by the internal 48 MHz RC Oscillator (RCOSC_HF) or an external 48 MHz crystal (XOSC_HF). Radio operation requires an external 48 MHz crystal.

SCLK_MF is an internal 2 MHz clock that is used by the Sensor Controller in low-power mode and also for internal power management circuitry. The SCLK_MF clock is always driven by the internal 2 MHz RC Oscillator (RCOSC_MF).

SCLK_LF is the 32.768 kHz internal low-frequency system clock. It can be used by the Sensor Controller for ultra-low-power operation and is also used for the RTC and to synchronize the radio timer before or after Standby power mode. SCLK_LF can be driven by the internal 32.8 kHz RC Oscillator (RCOSC_LF), a 32.768 kHz watch-type crystal, or a clock input on any digital IO.

When using a crystal or the internal RC oscillator, the device can output the 32 kHz SCLK_LF signal to other devices, thereby reducing the overall system cost.

9.14 Network Processor

Depending on the product configuration, the CC2642R-Q1 device can function as a wireless network processor (WNP - a device running the wireless protocol stack with the application running on a separate host MCU), or as a system-on-chip (SoC) with the application and protocol stack running on the system CPU inside the device.

In the first case, the external host MCU communicates with the device using SPI or UART. In the second case, the application must be written according to the application framework supplied with the wireless protocol stack.

Copyright © 2023 Texas Instruments Incorporated

10 Application, Implementation, and Layout

备注

以下应用部分中的信息不属于 TI 器件规格的范围，TI 不担保其准确性和完整性。TI 的客 户应负责确定器件是否适用于其应用。客户应验证并测试其设计，以确保系统功能。

For general design guidelines and hardware configuration guidelines, refer to CC13xx/CC26xx Hardware Configuration and PCB Design Considerations Application Report.

10.1 Reference Designs

The following reference designs should be followed closely when implementing designs using the CC2642R-Q1 device.

Special attention must be paid to RF component placement, decoupling capacitors and DC/DC regulator components, as well as ground connections for all of these.

CC26x2REM-7ID-Q1 Design Files	The CC26x2REM-7ID-Q1 reference design provides schematic, layout and production files for the characterization board used for deriving the performance number found in this document.
LAUNCHXL-CC26X2R1 Design Files	The CC26X2R LaunchPad Design Files contain detailed schematics and layouts to build application specific boards using the CC2642R-Q1 device.
Sub-1 GHz and 2.4 GHz Antenna Kit for LaunchPad™ Development Kit and SensorTag	The antenna kit allows real-life testing to identify the optimal antenna for your application. The antenna kit includes 16 antennas covering frequencies from 169 MHz to 2.4 GHz, including: • PCB antennas • Helical antennas • Chip antennas • Dual-band antennas for 868 MHz and 915 MHz combined with 2.4 GHz The antenna kit includes a JSC cable to connect to the Wireless MCU LaunchPad Development Kits and SensorTags.

Copyright © 2023 Texas Instruments Incorporated

10.2 Junction Temperature Calculation

This section shows the different techniques for calculating the junction temperature under various operating conditions. For more details, see Semiconductor and IC Package Thermal Metrics.

There are three recommended ways to derive the junction temperature from other measured temperatures:

1. From package temperature:

$$T_J = \psi_{\mathrm{JT}} \times P + T_{\mathrm{case}} \quad (1)$$

2. From board temperature:

$$T_J = \psi_{\mathrm{JB}} \times P + T_{\mathrm{board}} \quad (2)$$

3. From ambient temperature:

$$T_J = R_{\theta\mathrm{JA}} \times P + T_A \quad (3)$$

P is the power dissipated from the device and can be calculated by multiplying current consumption with supply voltage. Thermal resistance coefficients are found in 节 8.8.

Example:

Using 方程式 3, the temperature difference between ambient temperature and junction temperature is calculated. In this example, we assume a simple use case where the radio is transmitting continuously at 0 dBm output power. Let us assume the ambient temperature is 105 °C and the supply voltage is 3 V. To calculate P, we need to look up the current consumption for Tx at 105 °C in 图 8-9. From the plot, we see that the current consumption is 7.9 mA. This means that P is 7.9 mA × 3 V = 23.7 mW.

The junction temperature is then calculated as:

$$T_J = 23.0^{\circ C}/_{W} \times 23.7mW + T_A = 0.5^{\circ}C + T_A \quad (4)$$

As can be seen from the example, the junction temperature will be 0.5 °C higher than the ambient temperature when running continuous Tx at 105 °C.

For various application use cases current consumption for other modules may have to be added to calculate the appropriate power dissipation. For example, the MCU may be running simultaneously as the radio, peripheral modules may be enabled, etc. Typically, the easiest way to find the peak current consumption, and thus the peak power dissipation in the device, is to measure as described in Measuring CC13xx and CC26xx current consumption.

Copyright © 2023 Texas Instruments Incorporated

11 Device and Documentation Support

TI offers an extensive line of development tools. Tools and software to evaluate the performance of the device, generate code, and develop solutions are listed as follows.

11.1 Device Nomenclature

To designate the stages in the product development cycle, TI assigns prefixes to all part numbers and/or date-code. Each device has one of three prefixes/identifications: X, P, or null (no prefix) (for example, XCC2642R-Q1 is in preview; therefore, an X prefix/identification is assigned).

Device development evolutionary flow:

X Experimental device that is not necessarily representative of the final device's electrical specifications and may not use production assembly flow.

P Prototype device that is not necessarily the final silicon die and may not necessarily meet final electrical specifications.

null Production version of the silicon die that is fully qualified.

Production devices have been characterized fully, and the quality and reliability of the device have been demonstrated fully. TI's standard warranty applies.

Predictions show that prototype devices (X or P) have a greater failure rate than the standard production devices. Texas Instruments recommends that these devices not be used in any production system because their expected end-use failure rate still is undefined. Only qualified production devices are to be used.

TI device nomenclature also includes a suffix with the device family name. This suffix indicates the package type (for example, *RGZ*).

For orderable part numbers of *CC2642R-Q1* devices in the RGZ (7-mm x 7-mm) package type, see the *Package Option Addendum* of this document, the Device Information in 节 3, the TI website (www.ti.com), or contact your TI sales representative.

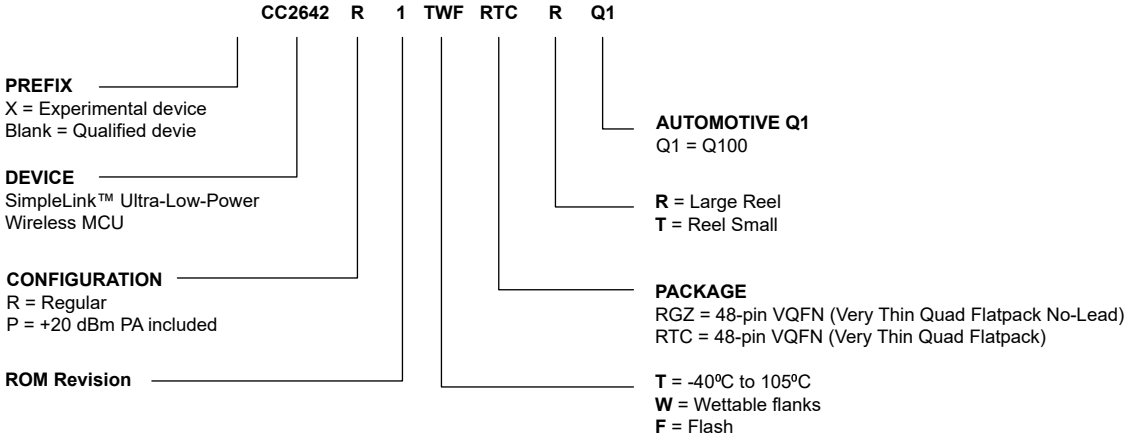

图 11-1. Device Nomenclature

11.2 Tools and Software

The CC2642R-Q1 device is supported by a variety of software and hardware development tools.

Development Kit

CC26x2 LaunchPad™ Development Kit

The CC26x2R LaunchPad™ Development Kit enables development of high-performance wireless applications that benefit from low-power operation. The kit features the CC2652R SimpleLink Wireless MCU, which allows quick evaluation and prototyping of 2.4-GHz wireless applications such as Bluetooth 5.1 Low Energy, Zigbee and

Copyright © 2023 Texas Instruments Incorporated

Thread, plus combinations of these. The kit works with the LaunchPad ecosystem, easily enabling additional functionality like sensors, display and more. The built-in EnergyTrace™ software is an energy-based code analysis tool that measures and displays the application's energy profile and helps to optimize it for ultra-low-power consumption. See 节 6 for guidance in selecting the correct device for single-protocol products.

Software

SimpleLink™ CC13XX-CC26XX SDK

The SimpleLink CC13X2-CC26X2 Software Development Kit (SDK) provides a complete package for the development of wireless applications on the CC13X2 / CC26X2 family of devices. The SDK includes a comprehensive software package for the CC2642R-Q1 device, including the following protocol stacks:

- Bluetooth Low Energy 4 and 5
- Thread (based on OpenThread)
- Zigbee 3.0
- TI 15.4-Stack - an IEEE 802.15.4-based star networking solution for Sub-1 GHz and 2.4 GHz
- EasyLink - a large set of building blocks for building proprietary RF software stacks
- Multiprotocol support - concurrent operation between stacks using the Dynamic Multiprotocol Manager (DMM)

The SimpleLink CC13X2-CC26X2 SDK is part of TI's SimpleLink MCU platform, offering a single development environment that delivers flexible hardware, software and tool options for customers developing wired and wireless applications. For more information about the SimpleLink MCU Platform, visit http://www.ti.com/simplelink.

Copyright © 2023 Texas Instruments Incorporated

Code Composer Studio™ Integrated Development Environment (IDE)

Code Composer Studio is an integrated development environment (IDE) that supports TI's Microcontroller and Embedded Processors portfolio. Code Composer Studio comprises a suite of tools used to develop and debug embedded applications. It includes an optimizing C/C++ compiler, source code editor, project build environment, debugger, profiler, and many other features. The intuitive IDE provides a single user interface taking you through each step of the application development flow. Familiar tools and interfaces allow users to get started faster than ever before. Code Composer Studio combines the advantages of the Eclipse® software framework with advanced embedded debug capabilities from TI resulting in a compelling feature-rich development environment for embedded developers.

CCS has support for all SimpleLink Wireless MCUs and includes support for EnergyTrace™ software (application energy usage profiling). A real-time object viewer plugin is available for TI-RTOS, part of the SimpleLink SDK.

Code Composer Studio is provided free of charge when used in conjunction with the XDS debuggers included on a LaunchPad Development Kit.

IAR Embedded Workbench® for Arm®

IAR Embedded Workbench® is a set of development tools for building and debugging embedded system applications using assembler, C and C++. It provides a completely integrated development environment that includes a project manager, editor, and build tools. IAR has support for all SimpleLink Wireless MCUs. It offers broad debugger support, including XDS110, IAR I-jet™ and Segger J-Link™. A real-time object viewer plugin is available for TI-RTOS, part of the SimpleLink SDK. IAR is also supported out-of-the-box on most software examples provided as part of the SimpleLink SDK.

A 30-day evaluation or a 32 KB size-limited version is available through iar.com.

SmartRF™ Studio

SmartRF™ Studio is a Windows® application that can be used to evaluate and configure SimpleLink Wireless MCUs from Texas Instruments. The application will help designers of RF systems to easily evaluate the radio at an early stage in the design process. It is especially useful for generation of configuration register values and for practical testing and debugging of the RF system. SmartRF Studio can be used either as a standalone application or together with applicable evaluation boards or debug probes for the RF device. Features of the SmartRF Studio include:

- Link tests - send and receive packets between nodes
- Antenna and radiation tests - set the radio in continuous wave TX and RX states
- Export radio configuration code for use with the TI SimpleLink SDK RF driver
- Custom GPIO configuration for signaling and control of external switches

Copyright © 2023 Texas Instruments Incorporated

Sensor Controller Studio

Sensor Controller Studio is used to write, test and debug code for the Sensor Controller peripheral. The tool generates a Sensor Controller Interface driver, which is a set of C source files that are compiled into the System CPU application. These source files also contain the Sensor Controller binary image and allow the System CPU application to control and exchange data with the Sensor Controller. Features of the Sensor Controller Studio include:

- Ready-to-use examples for several common use cases
- Full toolchain with built-in compiler and assembler for programming in a C-like programming language
- Provides rapid development by using the integrated sensor controller task testing and debugging functionality, including visualization of sensor data and verification of algorithms

CCS UniFlash

CCS UniFlash is a standalone tool used to program on-chip flash memory on TI MCUs. UniFlash has a GUI, command line, and scripting interface. CCS UniFlash is available free of charge.

11.2.1 SimpleLink™ Microcontroller Platform

The SimpleLink microcontroller platform sets a new standard for developers with the broadest portfolio of wired and wireless Arm® MCUs (System-on-Chip) in a single software development environment. Delivering flexible hardware, software and tool options for your IoT applications. Invest once in the SimpleLink software development kit and use it throughout your entire portfolio. Learn more on ti.com/simplelink.

11.3 Documentation Support

To receive notification of documentation updates on data sheets, errata, application notes and similar, navigate to the device product folder on ti.com/product/CC2642R-Q1. In the upper right corner, click on *Alert me* to register and receive a weekly digest of any product information that has changed. For change details, review the revision history included in any revised document.

The current documentation that describes the MCU, related peripherals, and other technical collateral is listed as follows.

TI Resource Explorer

TI Resource Explorer

Software examples, libraries, executables, and documentation are available for your device and development board.

Errata

CC2642R-Q1 Silicon Errata

The silicon errata describes the known exceptions to the functional specifications for each silicon revision of the device and description on how to recognize a device revision.

Application Reports

All application reports for the CC2642R-Q1 device are found on the device product folder at: ti.com/product/CC2642R-Q1.

Copyright © 2023 Texas Instruments Incorporated

CC13x2, CC26x2 SimpleLink™ Wireless MCU TRM	The TRM provides a detailed description of all modules and peripherals available in the device family.

11.4 支持资源

TI E2E™ 支持论坛是工程师的重要参考资料，可直接从专家获得快速、经过验证的解答和设计帮助。搜索现有解答或提出自己的问题可获得所需的快速设计帮助。

链接的内容由各个贡献者“按原样”提供。这些内容并不构成 TI 技术规范，并且不一定反映 TI 的观点；请参阅 TI 的《使用条款》。

11.5 Trademarks

LaunchPad™, EnergyTrace™, Code Composer Studio™, and TI E2E™ are trademarks of Texas Instruments.
I-jet™ is a trademark of IAR Systems AB.
J-Link™ is a trademark of SEGGER Microcontroller Systeme GmbH.
Arm® and Cortex® are registered trademarks of Arm Limited (or its subsidiaries) in the US and/or elsewhere.
CoreMark® is a registered trademark of Embedded Microprocessor Benchmark Consortium Corporation.
Wi-Fi® is a registered trademark of Wi-Fi Alliance.
Arm Thumb® is a registered trademark of Arm Limited (or its subsidiaries).
Eclipse® is a registered trademark of Eclipse Foundation.
IAR Embedded Workbench® is a registered trademark of IAR Systems AB.
Windows® is a registered trademark of Microsoft Corporation.
所有商标均为其各自所有者的财产。

11.6 静电放电警告



静电放电 (ESD) 会损坏这个集成电路。德州仪器 (TI) 建议通过适当的预防措施处理所有集成电路。如果不遵守正确的处理和安装程序，可能会损坏集成电路。

ESD 的损坏小至导致微小的性能降级，大至整个器件故障。精密的集成电路可能更容易受到损坏，这是因为非常细微的参数更改都可能会导致器件与其发布的规格不相符。

11.7 术语表

TI 术语表	本术语表列出并解释了术语、首字母缩略词和定义。

Copyright © 2023 Texas Instruments Incorporated

12 Mechanical, Packaging, and Orderable Information

Copyright © 2023 Texas Instruments Incorporated

PACKAGING INFORMATION

Orderable part number	Status (1)	Material type (2)	Package | Pins	Package qty | Carrier	RoHS (3)	Lead finish/ Ball material (4)	MSL rating/ Peak reflow (5)	Op temp (°C)	Part marking (6)
CC2642R1FTWRGZRQ1	Active	Production	VQFN (RGZ) | 48	2500 | LARGE T&R	Yes	Call TI | Nipdau	Level-3-260C-168 HR	-40 to 105	CC2642 Q1 R1F
CC2642R1FTWRGZRQ1.A	Active	Production	VQFN (RGZ) | 48	2500 | LARGE T&R	Yes	Call TI	Level-3-260C-168 HR	-40 to 105	CC2642 Q1 R1F
CC2642R1FTWRGZRQ1.B	Active	Production	VQFN (RGZ) | 48	2500 | LARGE T&R	Yes	Call TI	Level-3-260C-168 HR	-40 to 105	CC2642 Q1 R1F
CC2642R1TWFRTCRQ1	Obsolete	Production	VQFN (RTC) | 48	-	-	Call TI	Call TI	-40 to 105	CC2642 Q1 R1F
CC2642R1TWFRTCRQ1.B	Obsolete	Production	VQFN (RTC) | 48	-	-	Call TI	Call TI	-40 to 105	CC2642 Q1 R1F

(1) **Status:** For more details on status, see our product life cycle.

(2) **Material type:** When designated, preproduction parts are prototypes/experimental devices, and are not yet approved or released for full production. Testing and final process, including without limitation quality assurance, reliability performance testing, and/or process qualification, may not yet be complete, and this item is subject to further changes or possible discontinuation. If available for ordering, purchases will be subject to an additional waiver at checkout, and are intended for early internal evaluation purposes only. These items are sold without warranties of any kind.

(3) **RoHS values:** Yes, No, RoHS Exempt. See the TI RoHS Statement for additional information and value definition.

(4) **Lead finish/Ball material:** Parts may have multiple material finish options. Finish options are separated by a vertical ruled line. Lead finish/Ball material values may wrap to two lines if the finish value exceeds the maximum column width.

(5) **MSL rating/Peak reflow:** The moisture sensitivity level ratings and peak solder (reflow) temperatures. In the event that a part has multiple moisture sensitivity ratings, only the lowest level per JEDEC standards is shown. Refer to the shipping label for the actual reflow temperature that will be used to mount the part to the printed circuit board.

(6) **Part marking:** There may be an additional marking, which relates to the logo, the lot trace code information, or the environmental category of the part.

Multiple part markings will be inside parentheses. Only one part marking contained in parentheses and separated by a "~" will appear on a part. If a line is indented then it is a continuation of the previous line and the two combined represent the entire part marking for that device.

Important Information and Disclaimer: The information provided on this page represents TI's knowledge and belief as of the date that it is provided. TI bases its knowledge and belief on information provided by third parties, and makes no representation or warranty as to the accuracy of such information. Efforts are underway to better integrate information from third parties. TI has taken and continues to take reasonable steps to provide representative and accurate information but may not have conducted destructive testing or chemical analysis on incoming materials and chemicals. TI and TI suppliers consider certain information to be proprietary, and thus CAS numbers and other limited information may not be available for release.

In no event shall TI's liability arising out of such information exceed the total purchase price of the TI part(s) at issue in this document sold by TI to Customer on an annual basis.

OTHER QUALIFIED VERSIONS OF CC2642R-Q1 :

- Catalog : CC2642R

NOTE: Qualified Version Definitions:

- Catalog - TI's standard catalog product

TAPE AND REEL INFORMATION

REEL DIMENSIONS

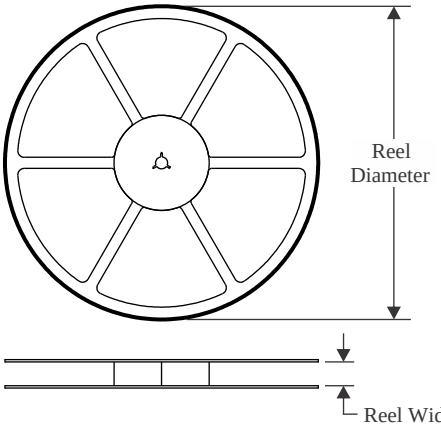

TAPE DIMENSIONS

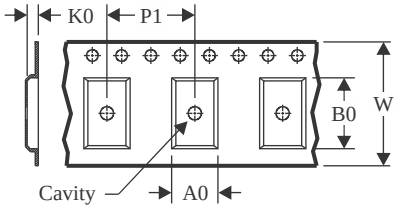

A0	Dimension designed to accommodate the component width
B0	Dimension designed to accommodate the component length
K0	Dimension designed to accommodate the component thickness
W	Overall width of the carrier tape
P1	Pitch between successive cavity centers

QUADRANT ASSIGNMENTS FOR PIN 1 ORIENTATION IN TAPE

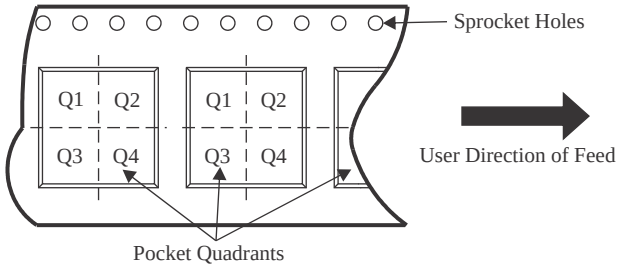

*All dimensions are nominal

Device	Package Type	Package Drawing	Pins	SPQ	Reel Diameter (mm)	Reel Width W1 (mm)	A0 (mm)	B0 (mm)	K0 (mm)	P1 (mm)	W (mm)	Pin1 Quadrant
CC2642R1FTWRGZRQ1	VQFN	RGZ	48	2500	330.0	16.4	7.3	7.3	1.1	12.0	16.0	Q2
CC2642R1FTWRGZRQ1	VQFN	RGZ	48	2500	330.0	16.4	7.3	7.3	1.1	12.0	16.0	Q2

TAPE AND REEL BOX DIMENSIONS

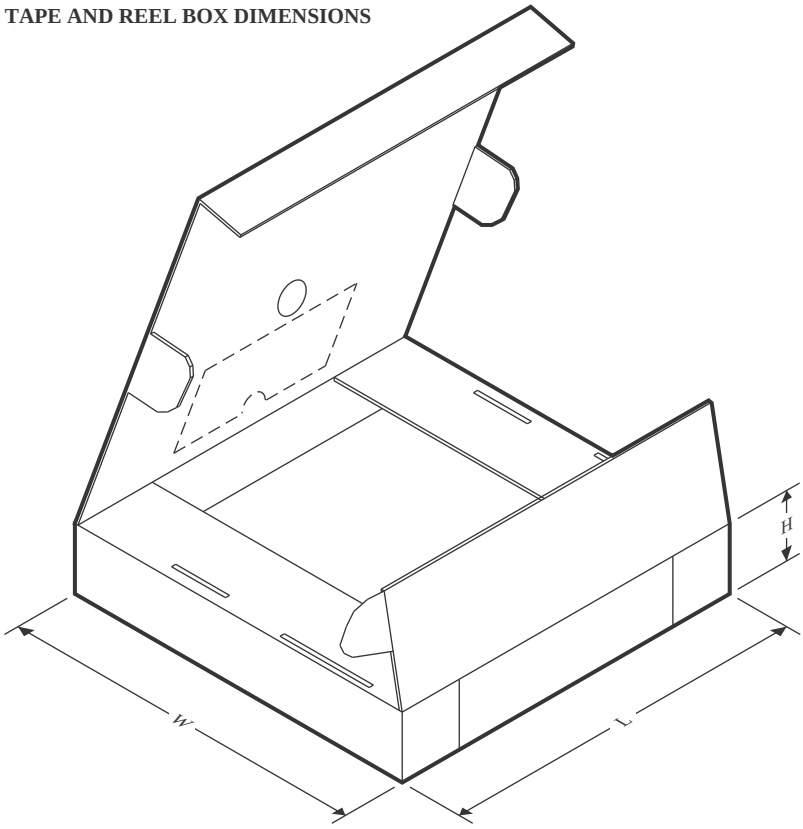

*All dimensions are nominal

Device	Package Type	Package Drawing	Pins	SPQ	Length (mm)	Width (mm)	Height (mm)
CC2642R1FTWRGZRQ1	VQFN	RGZ	48	2500	336.6	336.6	31.8
CC2642R1FTWRGZRQ1	VQFN	RGZ	48	2500	367.0	367.0	35.0

GENERIC PACKAGE VIEW

RGZ 48

VQFN - 1 mm max height

7 x 7, 0.5 mm pitch

PLASTIC QUADFLAT PACK- NO LEAD

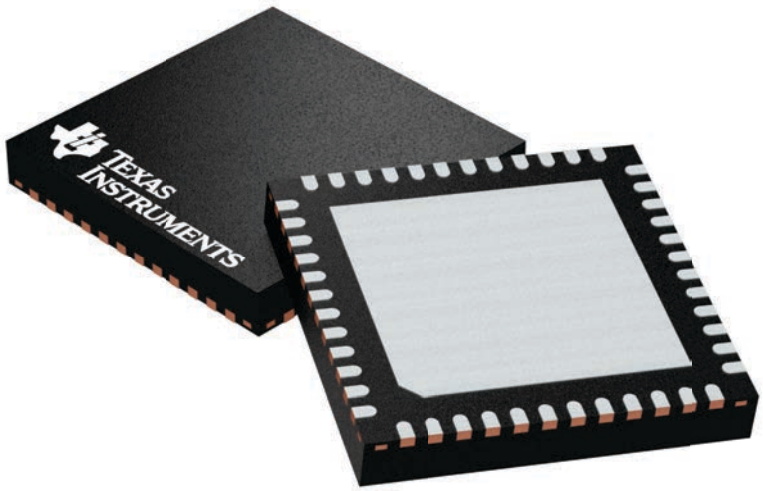

Images above are just a representation of the package family, actual package may vary.
Refer to the product data sheet for package details.

4224671/A

PACKAGE OUTLINE

RGZ0048R

VQFN - 1 mm max height

PLASTIC QUAD FLATPACK-NO LEAD

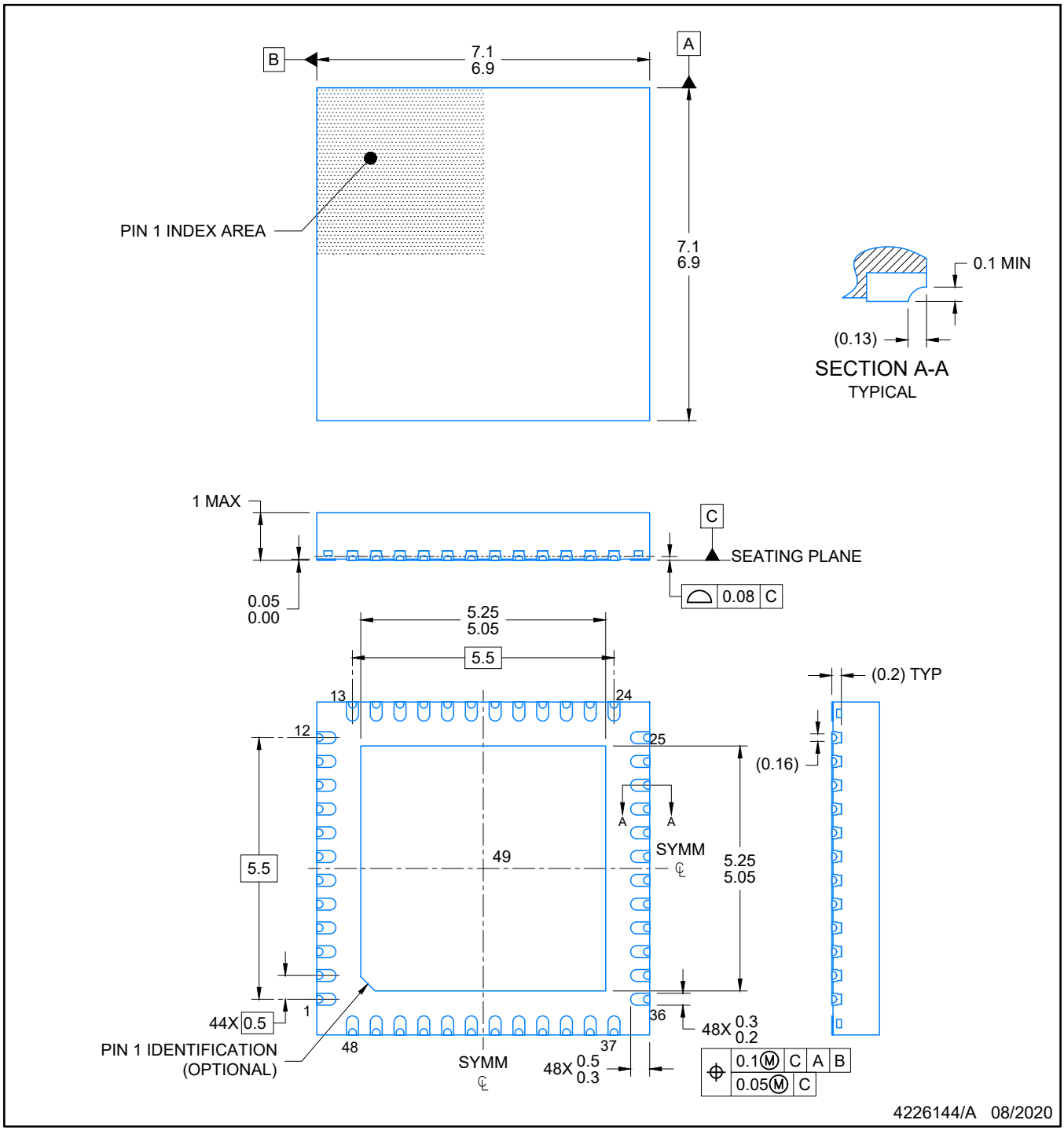

NOTES:

1. All linear dimensions are in millimeters. Any dimensions in parenthesis are for reference only. Dimensioning and tolerancing per ASME Y14.5M.
2. This drawing is subject to change without notice.
3. The package thermal pad must be soldered to the printed circuit board for optimal thermal and mechanical performance.

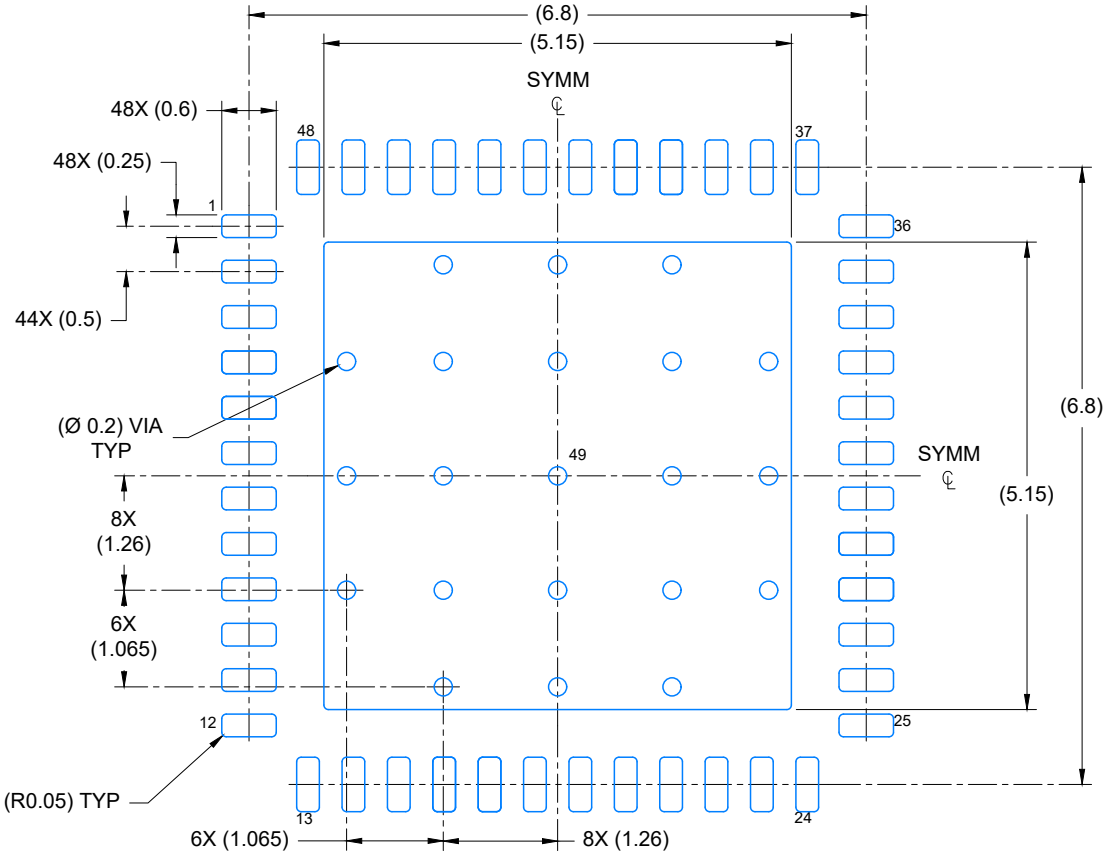

LAND PATTERN EXAMPLE
EXPOSED METAL SHOWN
SCALE: 12X

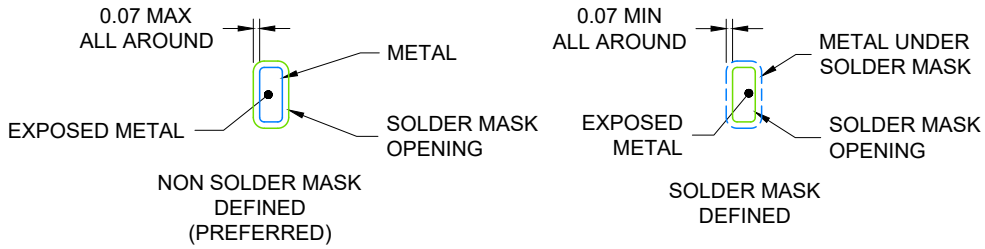

SOLDER MASK DETAILS

4226144/A 08/2020

NOTES: (continued)

4. This package is designed to be soldered to a thermal pad on the board. For more information, see Texas Instruments literature number SLUA271 (www.ti.com/lit/slua271).
5. Vias are optional depending on application, refer to device data sheet. If any vias are implemented, refer to their locations shown on this view. It is recommended that vias under paste be filled, plugged or tented.

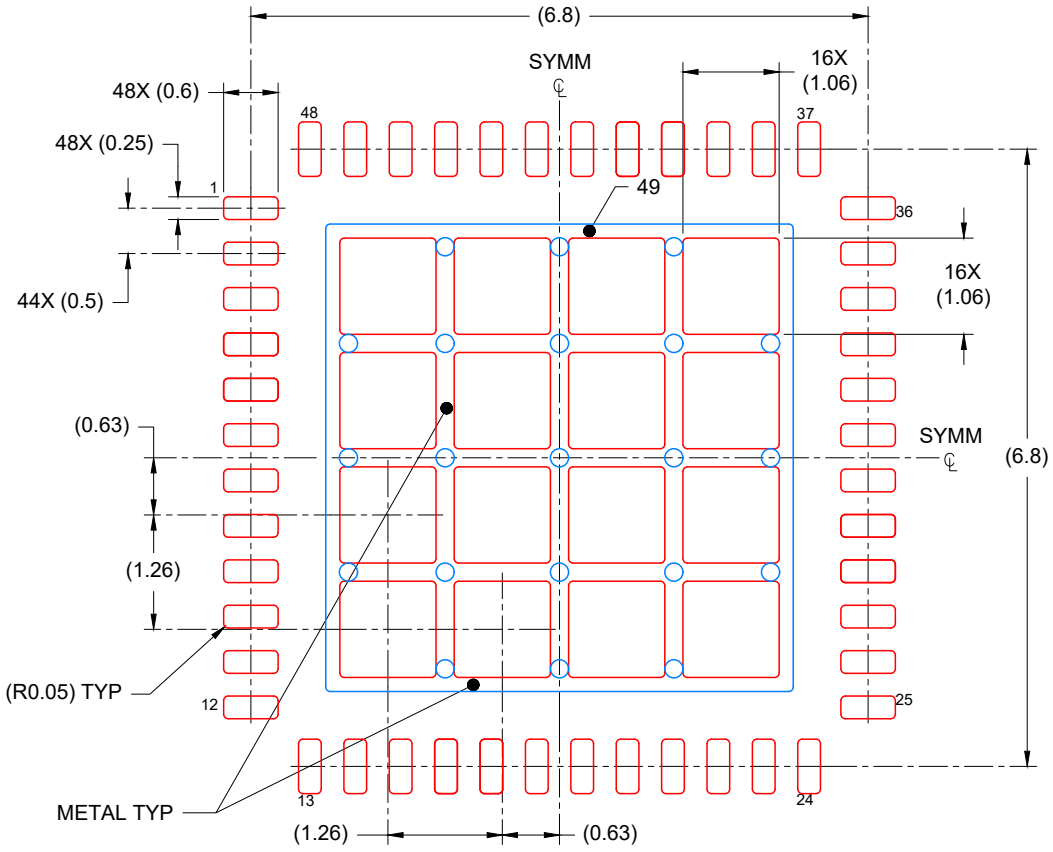

SOLDER PASTE EXAMPLE
BASED ON 0.125 mm THICK STENCIL

EXPOSED PAD
67% PRINTED COVERAGE BY AREA
SCALE: 12X

4226144/A 08/2020

NOTES: (continued)

6. Laser cutting apertures with trapezoidal walls and rounded corners may offer better paste release. IPC-7525 may have alternate design recommendations.

GENERIC PACKAGE VIEW

RTC 48

VQFNP - 0.9 mm max height

7 x 7, 0.5 mm pitch

PLASTIC QUAD FLATPACK - NO LEAD

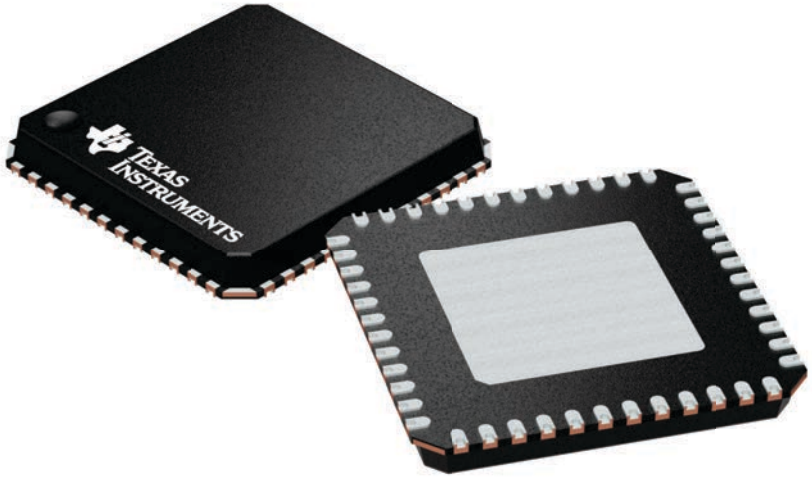

Images above are just a representation of the package family, actual package may vary.
Refer to the product data sheet for package details.

4224601/A

重要通知和免责声明

TI“按原样”提供技术和可靠性数据（包括数据表）、设计资源（包括参考设计）、应用或其他设计建议、网络工具、安全信息和其他资源，不保证没有瑕疵且不做出任何明示或暗示的担保，包括但不限于对适销性、与某特定用途的适用性或不侵犯任何第三方知识产权的暗示担保。

这些资源可供使用 TI 产品进行设计的熟练开发人员使用。您将自行承担以下全部责任：(1) 针对您的应用选择合适的 TI 产品，(2) 设计、验证并测试您的应用，(3) 确保您的应用满足相应标准以及任何其他安全、安保法规或其他要求。

这些资源如有变更，恕不另行通知。TI 授权您仅可将这些资源用于研发本资源所述的 TI 产品的相关应用。严禁以其他方式对这些资源进行复制或展示。您无权使用任何其他 TI 知识产权或任何第三方知识产权。对于因您对这些资源的使用而对 TI 及其代表造成的任何索赔、损害、成本、损失和债务，您将全额赔偿，TI 对此概不负责。

TI 提供的产品受 TI 销售条款)、TI 通用质量指南 或 ti.com 上其他适用条款或 TI 产品随附的其他适用条款的约束。TI 提供这些资源并不会扩展或以其他方式更改 TI 针对 TI 产品发布的适用的担保或担保免责声明。 除非德州仪器 (TI) 明确将某产品指定为定制产品或客户特定产品，否则其产品均为按确定价格收入目录的标准通用器件。

TI 反对并拒绝您可能提出的任何其他或不同的条款。

版权所有 © 2026，德州仪器 (TI) 公司

最后更新日期：2025 年 10 月