2.4-GHz *Bluetooth*™ 低能耗和私有片载系统

查询样品: **CC2541**

特性

- 射频
  - **2.4-GHz *Bluetooth*** 符合低能耗规范和私有的 **RF** 片载系统
  - 支持 **250-kbps**，**500-kbps**，**1-Mbps**，**2-Mbps** 的数据速率
  - 出色的链路预算，不使用外部前段而支持长距离应用
  - 高达 **0 dBm** 的可编程输出功率
  - 出色的接收器灵敏度 （**1 Mbps** 时为 **–94 dBm**），可选择性，和阻挡性能
  - 适合于针对符合世界范围内的无线电频率调节系统： **ETSI EN 300 328** 和 **EN 300 440 2** 类（欧洲），**FCC CFR47 15** 部分（美国），和 **ARIB STD-T66** （日本）
- 布局
  - 极少的外部组件
  - 提供参考设计
  - **6-mm × 6-mm** 方形扁平无引脚 **(QFN)-40** 封装
  - 与 **CC2540** 引脚兼容 （当不使用 **USB** 或者 **I^2C** 时）
- 低功率
  - 工作模式 **RX** 低至： **17.9 mA**
  - 工作模式 **TX (0 dBm)**： **18.2 mA**
  - 功率模式 **1** （**4-µs** 唤醒）： **270 µA**
  - 功率模式 **2** （睡眠定时器打开）： **1 µA**
  - 功率模式 **3** （外部中断）： **0.5 µA**
  - 宽泛的电源电压范围 **(2 V–3.6 V)**
- 工作模式下 **TPS62730** 兼容低功率
  - **RX** 低至： **14.7 mA** （**3-V** 电源）
  - **TX (0 dBm)**：**14.3 mA**（**3V** 电源）
- 微控制器
  - 具有代码预取功能的高性能和低功率 **8051** 微控制器内核
  - 系统内可编程闪存，**128** 或者 **256 KB**
  - 在所有功率模式下具有保持功能的 **8-KB RAM**
  - 支持硬件调试
  - 扩展基带自动化，包括自动确认和地址解码
  - 所有功率模式中对所有相关寄存器的保持
- 外设
  - 功能强大的 **5** 通道直接内存访问 **(DMA)**
  - 通用定时器 （**1** 个 **16** 位，**2** 个 **8** 位）
  - 红外 **(IR)** 生成电路
  - 具有捕捉功能的 **32-kHz** 睡眠定时器
  - 精确数字接收到的数字信号强度指示器 **(RSSI)** 支持
  - 电池监视器和温度传感器
  - 含 **8** 通道和可配置分辨率的 **12** 位模数转换器 **(ADC)**
  - 高级加密标准 **(AES)** 安全协处理器
  - **2** 个功能强大的支持几个串行协议的通用异步接收发器 **(UART)**
  - **23** 个通用 **I/O** 引脚 **(21 × 4 mA**，**2 × 20 mA)**
  - **I^2C** 接口
  - **2** 个具有 **LED** 驱动功能的 **I/O** 引脚
  - 安全装置定时器
  - 集成的高性能比较器
- 开发工具
  - **CC2541** 评估模块工具包 **(CC2541EMK)**
  - **CC2541** 小型开发工具包 **(CC2541DK-MINI)**
  - **SmartRF™** 软件
  - 提供 **IAR** 嵌入式 **Workbench™**

Please be aware that an important notice concerning availability, standard warranty, and use in critical applications of Texas Instruments semiconductor products and disclaimers thereto appears at the end of this data sheet.

Bluetooth is a trademark of Bluetooth SIG, Inc..
ZigBee is a registered trademark of ZigBee Alliance.

PRODUCTION DATA information is current as of publication date. Products conform to specifications per the terms of the Texas Instruments standard warranty. Production processing does not necessarily include testing of all parameters.

版权 © 2012–2013, Texas Instruments Incorporated

English Data Sheet: SWRS110

软件特性

- 符合针对单模式蓝牙低能耗 **(BLE)** 解决方案的符合***Bluetooth* v4.0** 协议的堆栈
  - 完全功率优化堆栈，包括控制器和主机
    - **GAP -** 中心设备，外设，或者广播器（包括组合角色）
    - 属性协议 **(ATT) /** 通用属性配置文件 **(GATT) –** 客户端和服务器
    - 对称式对多重处理 **(SMP) - AES-128** 加密和解密
    - **L2CAP**
  - 示例应用和配置文件
    - 针对 **GAP** 中心和外围作用的一般应用
    - 距离临近，加速计，简单关键字，和电池 **GATT** 服务
    - **BLE** 软件栈 内支持更多应用
  - 多重配置选项
    - 单芯片配置，允许应用运行在 **CC2541** 上
    - 用于运行在一个外部微处理器上的网络处理器接口
  - **BTool -** 用于评估、开发和测试的视窗 **(Windows) PC** 应用

应用范围

- **2.4-GHz *Bluetooth*** 低能耗系统
- 私有的 **2.4-GHz** 系统
- 人机接口器件（键盘，鼠标，遥控）
- 体育和休闲设备
- 移动电话附件
- 消费类电子产品

含有 TPS62730 的 CC2541

- **TPS62730** 是一款具有旁通模式的 **2-MHz** 降压转换器
- 延长电池寿命高达 **20%**
- 在所有工作模式下减少的电流
- **30-nA** 旁通模式电流以支持低功率模式
- **RF** 性能并未改变
- 小型封装允许小型解决方案尺寸
- **CC2541** 可控

说明

CC2541 是一款针对 *Bluetooth* 低能耗以及私有 2.4-GHz 应用的功率优化的真正片载系统 (SoC) 解决方案。 它使得使用低总体物料清单成本建立强健网络节点成为可能。 CC2541 将领先 RF 收发器的出色性能和一个业界标准的增强型 8051 MCU、系统内可编程闪存存储器、8-KB RAM 和很多其它功能强大的特性和外设组合在一起。 CC2541 非常适合应用于需要超低能耗的系统。 这由多种不同的运行模式指定。 运行模式间较短的转换时间进一步使低能耗变为可能。

如果 CC2540 上的 USB 未启用并且 CC2541 上的 I^2C/ 额外 I/O 未启用，那么 CC2541 与 CC2540 在 6-mm x 6-mm 方形扁平无引脚 (QFN)40 封装内引脚兼容。 与 CC2540 相比，CC2541 提供更低 RF 流耗。 CC2541 没有 CC2540 所具有的 USB 接口，并在 TX 模式中提供较低的最大输出功率。 CC2541 还增加了 1 个 HW I^2C 接口。

CC2541 与 CC2533 优化 RF4CE IEEE 802.15.4 SoC 引脚兼容。

CC2541 有 2 个不同的版本：分别具有 128kB 和 256kB 闪存的的 CC2541F128/F256。

CC2541 的方框图请参见Figure 1。

Copyright © 2012–2013, Texas Instruments Incorporated

This integrated circuit can be damaged by ESD. Texas Instruments recommends that all integrated circuits be handled with appropriate precautions. Failure to observe proper handling and installation procedures can cause damage.

ESD damage can range from subtle performance degradation to complete device failure. Precision integrated circuits may be more susceptible to damage because very small parametric changes could cause the device not to meet its published specifications.

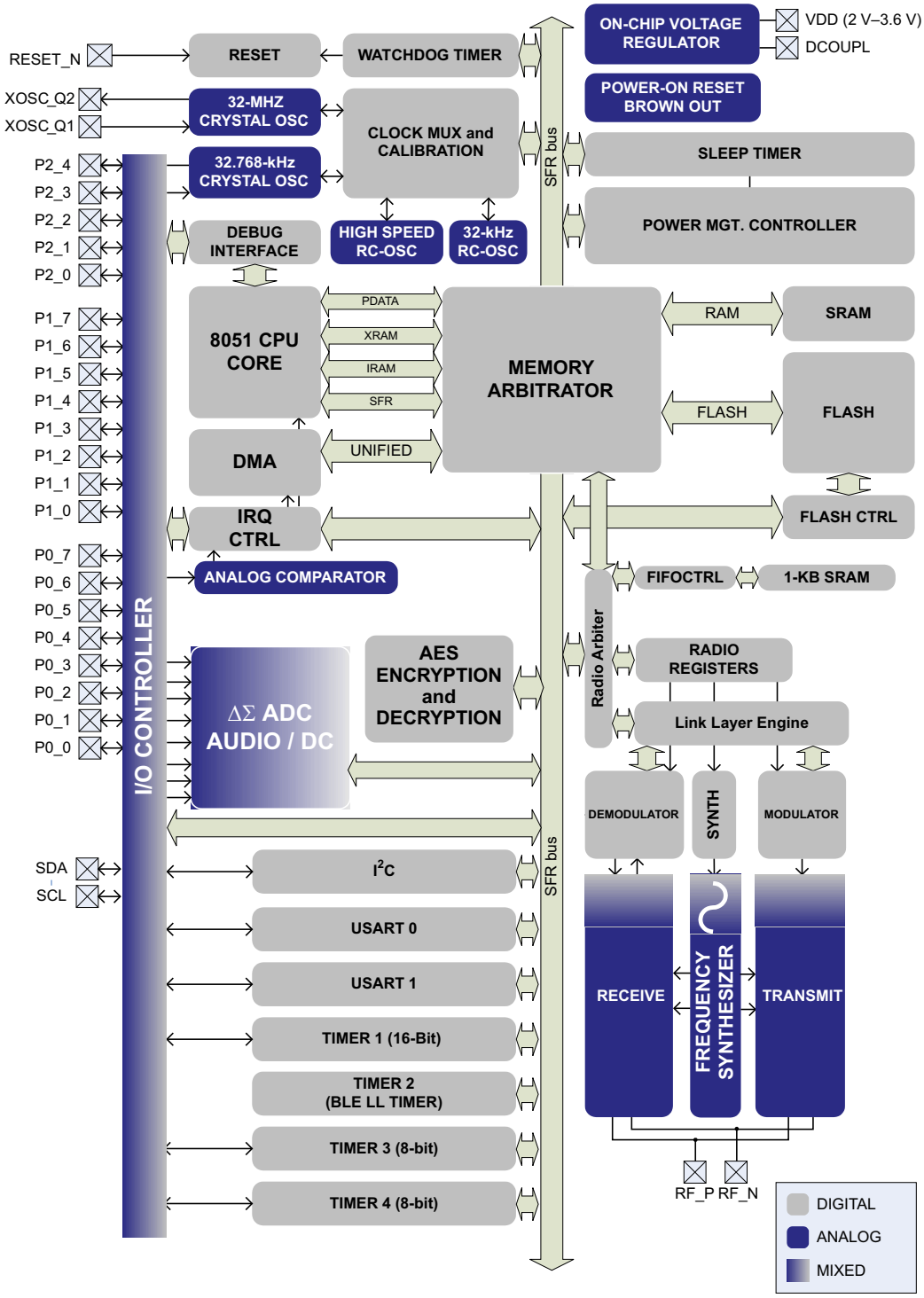

Figure 1. Block Diagram

ABSOLUTE MAXIMUM RATINGS(1)

over operating free-air temperature range (unless otherwise noted)

		MIN	MAX	UNIT
Supply voltage	All supply pins must have the same voltage	–0.3	3.9	V
Voltage on any digital pin		–0.3	VDD + 0.3 ≤ 3.9	V
Input RF level			10	dBm
Storage temperature range		–40	125	°C
ESD(2)	All pins, excluding pins 25 and 26, according to human-body model, JEDEC STD 22, method A114		2	kV
	All pins, according to human-body model, JEDEC STD 22, method A114		1	kV
	According to charged-device model, JEDEC STD 22, method C101		500	V

(1) Stresses beyond those listed under *Absolute Maximum Ratings* may cause permanent damage to the device. These are stress ratings only, and functional operation of the device at these or any other conditions beyond those indicated under *Recommended Operating Conditions* is not implied. Exposure to absolute-maximum-rated conditions for extended periods may affect device reliability.
(2) **CAUTION:** ESD sesnsitive device. Precautions should be used when handling the device in order to prevent permanent damage.

RECOMMENDED OPERATING CONDITIONS

over operating free-air temperature range (unless otherwise noted)

	MIN	NOM	MAX	UNIT
Operating ambient temperature range, T_A	–40		85	°C
Operating supply voltage	2		3.6	V

ELECTRICAL CHARACTERISTICS

Measured on Texas Instruments CC2541 EM reference design with T_A = 25°C and VDD = 3 V,
1 Mbps, GFSK, 250-kHz deviation, *Bluetooth* low energy mode, and 0.1% BER

PARAMETER		TEST CONDITIONS	MIN	TYP	MAX	UNIT
I_{core}	Core current consumption	RX mode, standard mode, no peripherals active, low MCU activity		17.9		mA
		RX mode, high-gain mode, no peripherals active, low MCU activity		20.2		mA
		TX mode, –20 dBm output power, no peripherals active, low MCU activity		16.8		mA
		TX mode, 0 dBm output power, no peripherals active, low MCU activity		18.2		mA
		Power mode 1. Digital regulator on; 16-MHz RCOSC and 32-MHz crystal oscillator off; 32.768-kHz XOSC, POR, BOD and sleep timer active; RAM and register retention		270		µA
		Power mode 2. Digital regulator off; 16-MHz RCOSC and 32-MHz crystal oscillator off; 32.768-kHz XOSC, POR, and sleep timer active; RAM and register retention		1		µA
		Power mode 3. Digital regulator off; no clocks; POR active; RAM and register retention		0.5		µA
		Low MCU activity: 32-MHz XOSC running. No radio or peripherals. Limited flash access, no RAM access.		6.7		mA
I_{peri}	Peripheral current consumption (Adds to core current I_{core} for each peripheral unit activated)	Timer 1. Timer running, 32-MHz XOSC used		90		µA
		Timer 2. Timer running, 32-MHz XOSC used		90		µA
		Timer 3. Timer running, 32-MHz XOSC used		60		µA
		Timer 4. Timer running, 32-MHz XOSC used		70		µA
		Sleep timer, including 32.753-kHz RCOSC		0.6		µA
		ADC, when converting		1.2		mA

Copyright © 2012–2013, Texas Instruments Incorporated

GENERAL CHARACTERISTICS

Measured on Texas Instruments CC2541 EM reference design with T_A = 25°C and VDD = 3 V

PARAMETER	TEST CONDITIONS	MIN	TYP	MAX	UNIT
WAKE-UP AND TIMING					
Power mode 1 → Active	Digital regulator on, 16-MHz RCOSC and 32-MHz crystal oscillator off. Start-up of 16-MHz RCOSC		4		µs
Power mode 2 or 3 → Active	Digital regulator off, 16-MHz RCOSC and 32-MHz crystal oscillator off. Start-up of regulator and 16-MHz RCOSC		120		µs
Active → TX or RX	Crystal ESR = 16 Ω. Initially running on 16-MHz RCOSC, with 32-MHz XOSC OFF		500		µs
	With 32-MHz XOSC initially on		180		µs
RX/TX turnaround	Proprietary auto mode		130		µs
	BLE mode		150		
RADIO PART					
RF frequency range	Programmable in 1-MHz steps	2379		2496	MHz
Data rate and modulation format	2 Mbps, GFSK, 500-kHz deviation 2 Mbps, GFSK, 320-kHz deviation 1 Mbps, GFSK, 250-kHz deviation 1 Mbps, GFSK, 160-kHz deviation 500 kbps, MSK 250 kbps, GFSK, 160-kHz deviation 250 kbps, MSK				

RF RECEIVE SECTION

Measured on Texas Instruments CC2541 EM reference design with T_A = 25°C, VDD = 3 V, f_c = 2440 MHz

PARAMETER	TEST CONDITIONS	MIN	TYP	MAX	UNIT
2 Mbps, GFSK, 500-kHz Deviation, 0.1% BER					
Receiver sensitivity			–90		dBm
Saturation	BER < 0.1%		–1		dBm
Co-channel rejection	Wanted signal at –67 dBm		–9		dB
In-band blocking rejection	±2 MHz offset, 0.1% BER, wanted signal –67 dBm		–2		dB
	±4 MHz offset, 0.1% BER, wanted signal –67 dBm		36		
	±6 MHz or greater offset, 0.1% BER, wanted signal –67 dBm		41		
Frequency error tolerance (1)	Including both initial tolerance and drift. Sensitivity better than –67dBm, 250 byte payload. BER 0.1%	–300		300	kHz
Symbol rate error tolerance (2)	Maximum packet length. Sensitivity better than–67dBm, 250 byte payload. BER 0.1%	–120		120	ppm
2 Mbps, GFSK, 320-kHz Deviation, 0.1% BER					
Receiver sensitivity			–86		dBm
Saturation	BER < 0.1%		–7		dBm
Co-channel rejection	Wanted signal at –67 dBm		–12		dB
In-band blocking rejection	±2 MHz offset, 0.1% BER, wanted signal –67 dBm		–1		dB
	±4 MHz offset, 0.1% BER, wanted signal –67 dBm		34		
	±6 MHz or greater offset, 0.1% BER, wanted signal –67 dBm		39		
Frequency error tolerance (1)	Including both initial tolerance and drift. Sensitivity better than –67 dBm, 250 byte payload. BER 0.1%	–300		300	kHz
Symbol rate error tolerance (2)	Maximum packet length. Sensitivity better than –67 dBm, 250 byte payload. BER 0.1%	–120		120	ppm

(1) Difference between center frequency of the received RF signal and local oscillator frequency
(2) Difference between incoming symbol rate and the internally generated symbol rate

Copyright © 2012–2013, Texas Instruments Incorporated

RF RECEIVE SECTION (continued)

Measured on Texas Instruments CC2541 EM reference design with T_A = 25°C, VDD = 3 V, f_c = 2440 MHz

PARAMETER	TEST CONDITIONS	MIN	TYP	MAX	UNIT
1 Mbps, GFSK, 250-kHz Deviation, *Bluetooth* low energy Mode, 0.1% BER					
Receiver sensitivity(3)(4)	High-gain mode		–94		dBm
	Standard mode		–88		
Saturation(4)	BER < 0.1%		5		dBm
Co-channel rejection(4)	Wanted signal –67 dBm		–6		dB
In-band blocking rejection(4)	±1 MHz offset, 0.1% BER, wanted signal –67 dBm		–2		dB
	±2 MHz offset, 0.1% BER, wanted signal –67 dBm		26		
	±3 MHz offset, 0.1% BER, wanted signal –67 dBm		34		
	>6 MHz offset, 0.1% BER, wanted signal –67 dBm		33		
Out-of-band blocking rejection(4)	Minimum interferer level < 2 GHz (Wanted signal –67 dBm)		–21		dBm
	Minimum interferer level [2 GHz, 3 GHz] (Wanted signal –67 dBm)		–25		
	Minimum interferer level > 3 GHz (Wanted signal –67 dBm)		–7		
Intermodulation(4)	Minimum interferer level		–36		dBm
Frequency error tolerance(5)	Including both initial tolerance and drift. Sensitivity better than -67dBm, 250 byte payload. BER 0.1%	–250		250	kHz
Symbol rate error tolerance(6)	Maximum packet length. Sensitivity better than –67 dBm, 250 byte payload. BER 0.1%	–80		80	ppm
1 Mbps, GFSK, 160-kHz Deviation, 0.1% BER					
Receiver sensitivity(7)			–91		dBm
Saturation	BER < 0.1%		0		dBm
Co-channel rejection	Wanted signal 10 dB above sensitivity level		–9		dB
In-band blocking rejection	±1-MHz offset, 0.1% BER, wanted signal –67 dBm		2		dB
	±2-MHz offset, 0.1% BER, wanted signal –67 dBm		24		
	±3-MHz offset, 0.1% BER, wanted signal -–67 dBm		27		
	>6-MHz offset, 0.1% BER, wanted signal –67 dBm		32		
Frequency error tolerance(5)	Including both initial tolerance and drift. Sensitivity better than –67 dBm, 250-byte payload. BER 0.1%	–200		200	kHz
Symbol rate error tolerance(6)	Maximum packet length. Sensitivity better than –67 dBm, 250-byte payload. BER 0.1%	–80		80	ppm
500 kbps, MSK, 0.1% BER					
Receiver sensitivity(7)			–99		dBm
Saturation	BER < 0.1%		0		dBm
Co-channel rejection	Wanted signal –67 dBm		–5		dB
In-band blocking rejection	±1-MHz offset, 0.1% BER, wanted signal –67 dBm		20		dB
	±2-MHz offset, 0.1% BER, wanted signal –67 dBm		27		
	>2-MHz offset, 0.1% BER, wanted signal –67 dBm		28		
Frequency error tolerance	Including both initial tolerance and drift. Sensitivity better than –67 dBm, 250-byte payload. BER 0.1%	–150		150	kHz
Symbol rate error tolerance	Maximum packet length. Sensitivity better than –67 dBm, 250-byte payload. BER 0.1%	–80		80	ppm

(3) The receiver sensitivity setting is programmable using a TI BLE stack vendor-specific API command. The default value is standard mode.
(4) Results based on standard-gain mode.
(5) Difference between center frequency of the received RF signal and local oscillator frequency
(6) Difference between incoming symbol rate and the internally generated symbol rate
(7) Results based on high-gain mode.

Copyright © 2012–2013, Texas Instruments Incorporated

RF RECEIVE SECTION (continued)

Measured on Texas Instruments CC2541 EM reference design with T_A = 25°C, VDD = 3 V, f_c = 2440 MHz

PARAMETER	TEST CONDITIONS	MIN	TYP	MAX	UNIT
250 kbps, GFSK, 160 kHz Deviation, 0.1% BER					
Receiver sensitivity (8)			–98		dBm
Saturation	BER < 0.1%		0		dBm
Co-channel rejection	Wanted signal -67 dBm		–3		dB
In-band blocking rejection	±1-MHz offset, 0.1% BER, wanted signal –67 dBm		23		dB
	±2-MHz offset, 0.1% BER, wanted signal –67 dBm		28		
	>2-MHz offset, 0.1% BER, wanted signal –67 dBm		29		
Frequency error tolerance (9)	Including both initial tolerance and drift. Sensitivity better than –67 dBm, 250-byte payload. BER 0.1%	–150		150	kHz
Symbol rate error tolerance (10)	Maximum packet length. Sensitivity better than –67 dBm, 250-byte payload. BER 0.1%	–80		80	ppm
250 kbps, MSK, 0.1% BER					
Receiver sensitivity (11)			–99		dBm
Saturation	BER < 0.1%		0		dBm
Co-channel rejection	Wanted signal -67 dBm		–5		dB
In-band blocking rejection	±1-MHz offset, 0.1% BER, wanted signal –67 dBm		20		dB
	±2-MHz offset, 0.1% BER, wanted signal –67 dBm		29		
	>2-MHz offset, 0.1% BER, wanted signal –67 dBm		30		
Frequency error tolerance	Including both initial tolerance and drift. Sensitivity better than –67 dBm, 250-byte payload. BER 0.1%	–150		150	kHz
Symbol rate error tolerance	Maximum packet length. Sensitivity better than –67 dBm, 250-byte payload. BER 0.1%	–80		80	ppm
ALL RATES/FORMATS					
Spurious emission in RX. Conducted measurement	f < 1 GHz		–67		dBm
Spurious emission in RX. Conducted measurement	f > 1 GHz		–57		dBm

(8) Results based on standard-gain mode.
(9) Difference between center frequency of the received RF signal and local oscillator frequency
(10) Difference between incoming symbol rate and the internally generated symbol rate
(11) Results based on high-gain mode.

Copyright © 2012–2013, Texas Instruments Incorporated

RF TRANSMIT SECTION

Measured on Texas Instruments CC2541 EM reference design with T_A = 25°C, VDD = 3 V and f_c = 2440 MHz

PARAMETER	TEST CONDITIONS	MIN	TYP	MAX	UNIT
Output power	Delivered to a single-ended 50-Ω load through a balun using maximum recommended output power setting		0		dBm
	Delivered to a single-ended 50-Ω load through a balun using minimum recommended output power setting		–23		
Programmable output power range	Delivered to a single-ended 50-Ω load through a balun using minimum recommended output power setting		23		dB
Spurious emission conducted measurement	f < 1 GHz		–52		dBm
	f > 1 GHz		–48		dBm
	Suitable for systems targeting compliance with worldwide radio-frequency regulations ETSI EN 300 328 and EN 300 440 Class 2 (Europe), FCC CFR47 Part 15 (US), and ARIB STD-T66 (Japan)				
Optimum load impedance	Differential impedance as seen from the RF port (RF_P and RF_N) toward the antenna		70 +j30		Ω

Designs with antenna connectors that require conducted ETSI compliance at 64 MHz should insert an LC resonator in front of the antenna connector. Use a 1.6-nH inductor in parallel with a 1.8-pF capacitor. Connect both from the signal trace to a good RF ground.

CURRENT CONSUMPTION WITH TPS62730

Measured on Texas Instruments CC2541 TPA62730 EM reference design with T_A = 25°C, VDD = 3 V and f_c = 2440 MHz, **1 Mbsp, GFSK, 250-kHz deviation, Bluetooth™ low energy Mode, 1% BER**(1)

PARAMETER	TEST CONDITIONS	MIN	TYP	MAX	UNIT
Current consumption	RX mode, standard mode, no peripherals active, low MCU activity, MCU at 1 MHz		14.7		mA
	RX mode, high-gain mode, no peripherals active, low MCU activity, MCU at 1 MHz		16.7		
	TX mode, –20 dBm output power, no peripherals active, low MCU activity, MCU at 1 MHz		13.1		
	TX mode, 0 dBm output power, no peripherals active, low MCU activity, MCU at 1 MHz		14.3		

(1) 0.1% BER maps to 30.8% PER

32-MHz CRYSTAL OSCILLATOR

Measured on Texas Instruments CC2541 EM reference design with T_A = 25°C and VDD = 3 V

PARAMETER		TEST CONDITIONS	MIN	TYP	MAX	UNIT
	Crystal frequency			32		MHz
	Crystal frequency accuracy requirement(1)		–40		40	ppm
ESR	Equivalent series resistance		6		60	Ω
C_0	Crystal shunt capacitance		1		7	pF
C_L	Crystal load capacitance		10		16	pF
	Start-up time			0.25		ms
	Power-down guard time	The crystal oscillator must be in power down for a guard time before it is used again. This requirement is valid for all modes of operation. The need for power-down guard time can vary with crystal type and load.	3			ms

(1) Including aging and temperature dependency, as specified by [1]

Copyright © 2012–2013, Texas Instruments Incorporated

32.768-kHz CRYSTAL OSCILLATOR

Measured on Texas Instruments CC2541 EM reference design with T_A = 25°C and VDD = 3 V

PARAMETER		TEST CONDITIONS	MIN	TYP	MAX	UNIT
	Crystal frequency			32.768		kHz
	Crystal frequency accuracy requirement(1)		–40		40	ppm
ESR	Equivalent series resistance			40	130	kΩ
C_0	Crystal shunt capacitance			0.9	2	pF
C_L	Crystal load capacitance			12	16	pF
	Start-up time			0.4		s

(1) Including aging and temperature dependency, as specified by [1]

32-kHz RC OSCILLATOR

Measured on Texas Instruments CC2541 EM reference design with T_A = 25°C and VDD = 3 V.

PARAMETER	TEST CONDITIONS	MIN	TYP	MAX	UNIT
Calibrated frequency(1)			32.753		kHz
Frequency accuracy after calibration			±0.2%		
Temperature coefficient(2)			0.4		%/°C
Supply-voltage coefficient(3)			3		%/V
Calibration time(4)			2		ms

(1) The calibrated 32-kHz RC oscillator frequency is the 32-MHz XTAL frequency divided by 977.
(2) Frequency drift when temperature changes after calibration
(3) Frequency drift when supply voltage changes after calibration
(4) When the 32-kHz RC oscillator is enabled, it is calibrated when a switch from the 16-MHz RC oscillator to the 32-MHz crystal oscillator is performed while SLEEPCMD.OSC32K_CALDIS is set to 0.

16-MHz RC OSCILLATOR

Measured on Texas Instruments CC2541 EM reference design with T_A = 25°C and VDD = 3 V

PARAMETER	TEST CONDITIONS	MIN	TYP	MAX	UNIT
Frequency(1)			16		MHz
Uncalibrated frequency accuracy			±18%		
Calibrated frequency accuracy			±0.6%		
Start-up time			10		µs
Initial calibration time(2)			50		µs

(1) The calibrated 16-MHz RC oscillator frequency is the 32-MHz XTAL frequency divided by 2.
(2) When the 16-MHz RC oscillator is enabled, it is calibrated when a switch from the 16-MHz RC oscillator to the 32-MHz crystal oscillator is performed while SLEEPCMD.OSC_PD is set to 0.

Copyright © 2012–2013, Texas Instruments Incorporated

RSSI CHARACTERISTICS

Measured on Texas Instruments CC2541 EM reference design with T_A = 25°C and VDD = 3 V

PARAMETER	TEST CONDITIONS	MIN	TYP	MAX	UNIT
2 Mbps, GFSK, 320-kHz Deviation, 0.1% BER and 2 Mbps, GFSK, 500-kHz Deviation, 0.1% BER					
Useful RSSI range (1)	Reduced gain by AGC algorithm		64		dB
	High gain by AGC algorithm		64		
RSSI offset (1)	Reduced gain by AGC algorithm		79		dBm
	High gain by AGC algorithm		99		
Absolute uncalibrated accuracy (1)			±6		dB
Step size (LSB value)			1		dB
All Other Rates/Formats					
Useful RSSI range (1)	Standard mode		64		dB
	High-gain mode		64		
RSSI offset (1)	Standard mode		98		dBm
	High-gain mode		107		
Absolute uncalibrated accuracy (1)			±3		dB
Step size (LSB value)			1		dB

(1) Assuming CC2541 EM reference design. Other RF designs give an offset from the reported value.

FREQUENCY SYNTHESIZER CHARACTERISTICS

Measured on Texas Instruments CC2541 EM reference design with T_A = 25°C, VDD = 3 V and f_c = 2440 MHz

PARAMETER	TEST CONDITIONS	MIN	TYP	MAX	UNIT
Phase noise, unmodulated carrier	At ±1-MHz offset from carrier		–109		dBc/Hz
	At ±3-MHz offset from carrier		–112		
	At ±5-MHz offset from carrier		–119		

ANALOG TEMPERATURE SENSOR

Measured on Texas Instruments CC2541 EM reference design with T_A = 25°C and VDD = 3 V

PARAMETER	TEST CONDITIONS	MIN	TYP	MAX	UNIT
Output	Measured using integrated ADC, internal band-gap voltage reference, and maximum resolution		1480		12-bit
Temperature coefficient			4.5		/ 1°C
Voltage coefficient			1		0.1 V
Initial accuracy without calibration			±10		°C
Accuracy using 1-point calibration			±5		°C
Current consumption when enabled			0.5		mA

COMPARATOR CHARACTERISTICS

T_A = 25°C, VDD = 3 V. All measurement results are obtained using the CC2541 reference designs, post-calibration.

PARAMETER	TEST CONDITIONS	MIN	TYP	MAX	UNIT
Common-mode maximum voltage			VDD		V
Common-mode minimum voltage			–0.3		
Input offset voltage			1		mV
Offset vs temperature			16		µV/°C
Offset vs operating voltage			4		mV/V
Supply current			230		nA
Hysteresis			0.15		mV

Copyright © 2012–2013, Texas Instruments Incorporated

ADC CHARACTERISTICS

T_A = 25°C and VDD = 3 V

PARAMETER		TEST CONDITIONS	MIN	TYP	MAX	UNIT
	Input voltage	VDD is voltage on AVDD5 pin	0		VDD	V
	External reference voltage	VDD is voltage on AVDD5 pin	0		VDD	V
	External reference voltage differential	VDD is voltage on AVDD5 pin	0		VDD	V
	Input resistance, signal	Simulated using 4-MHz clock speed		197		kΩ
	Full-scale signal (1)	Peak-to-peak, defines 0 dBFS		2.97		V
ENOB (1)	Effective number of bits	Single-ended input, 7-bit setting		5.7		bits
		Single-ended input, 9-bit setting		7.5		
		Single-ended input, 10-bit setting		9.3		
		Single-ended input, 12-bit setting		10.3		
		Differential input, 7-bit setting		6.5		
		Differential input, 9-bit setting		8.3		
		Differential input, 10-bit setting		10		
		Differential input, 12-bit setting		11.5		
		10-bit setting, clocked by RCOSC		9.7		
		12-bit setting, clocked by RCOSC		10.9		
	Useful power bandwidth	7-bit setting, both single and differential		0–20		kHz
THD	Total harmonic distortion	Single ended input, 12-bit setting, –6 dBFS (1)		–75.2		dB
		Differential input, 12-bit setting, –6 dBFS (1)		–86.6		
	Signal to nonharmonic ratio	Single-ended input, 12-bit setting (1)		70.2		dB
		Differential input, 12-bit setting (1)		79.3		
		Single-ended input, 12-bit setting, –6 dBFS (1)		78.8		
		Differential input, 12-bit setting, –6 dBFS (1)		88.9		
CMRR	Common-mode rejection ratio	Differential input, 12-bit setting, 1-kHz sine (0 dBFS), limited by ADC resolution		>84		dB
	Crosstalk	Single ended input, 12-bit setting, 1-kHz sine (0 dBFS), limited by ADC resolution		>84		dB
	Offset	Midscale		–3		mV
	Gain error			0.68%		
DNL	Differential nonlinearity	12-bit setting, mean (1)		0.05		LSB
		12-bit setting, maximum (1)		0.9		
INL	Integral nonlinearity	12-bit setting, mean (1)		4.6		LSB
		12-bit setting, maximum (1)		13.3		
		12-bit setting, mean, clocked by RCOSC		10		
		12-bit setting, max, clocked by RCOSC		29		
SINAD (–THD+N)	Signal-to-noise-and-distortion	Single ended input, 7-bit setting (1)		35.4		dB
		Single ended input, 9-bit setting (1)		46.8		
		Single ended input, 10-bit setting (1)		57.5		
		Single ended input, 12-bit setting (1)		66.6		
		Differential input, 7-bit setting (1)		40.7		
		Differential input, 9-bit setting (1)		51.6		
		Differential input, 10-bit setting (1)		61.8		
		Differential input, 12-bit setting (1)		70.8		
	Conversion time	7-bit setting		20		µs
		9-bit setting		36		
		10-bit setting		68		
		12-bit setting		132		

(1) Measured with 300-Hz sine-wave input and VDD as reference.

Copyright © 2012–2013, Texas Instruments Incorporated

ADC CHARACTERISTICS (continued)

T_A = 25°C and VDD = 3 V

PARAMETER	TEST CONDITIONS	MIN	TYP	MAX	UNIT
Power consumption			1.2		mA
Internal reference VDD coefficient			4		mV/V
Internal reference temperature coefficient			0.4		mV/10°C
Internal reference voltage			1.24		V

CONTROL INPUT AC CHARACTERISTICS

T_A = –40°C to 85°C, VDD = 2 V to 3.6 V

PARAMETER	TEST CONDITIONS	MIN	TYP	MAX	UNIT
System clock, f_{SYSCLK} t_{SYSCLK} = 1/ f_{SYSCLK}	The undivided system clock is 32 MHz when crystal oscillator is used. The undivided system clock is 16 MHz when calibrated 16-MHz RC oscillator is used.	16		32	MHz
RESET_N low duration	See item 1, Figure 2. This is the shortest pulse that is recognized as a complete reset pin request. Note that shorter pulses may be recognized but do not lead to complete reset of all modules within the chip.	1			µs
Interrupt pulse duration	See item 2, Figure 2.This is the shortest pulse that is recognized as an interrupt request.	20			ns

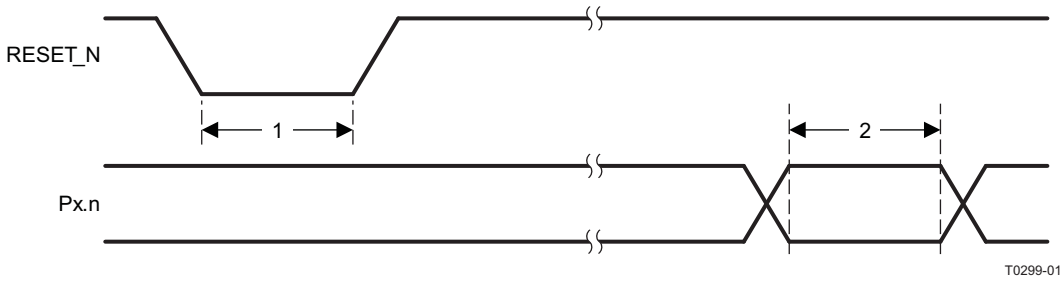

Figure 2. Control Input AC Characteristics

Copyright © 2012–2013, Texas Instruments Incorporated

SPI AC CHARACTERISTICS

T_A = –40°C to 85°C, VDD = 2 V to 3.6 V

PARAMETER		TEST CONDITIONS	MIN	TYP	MAX	UNIT
t_1	SCK period	Master, RX and TX	250			ns
		Slave, RX and TX	250			
	SCK duty cycle	Master		50%		
t_2	SSN low to SCK	Master	63			ns
		Slave	63			
t_3	SCK to SSN high	Master	63			ns
		Slave	63			
t_4	MOSI early out	Master, load = 10 pF			7	ns
t_5	MOSI late out	Master, load = 10 pF			10	ns
t_6	MISO setup	Master	90			ns
t_7	MISO hold	Master	10			ns
	SCK duty cycle	Slave		50%		ns
t_{10}	MOSI setup	Slave	35			ns
t_{11}	MOSI hold	Slave	10			ns
t_9	MISO late out	Slave, load = 10 pF			95	ns
	Operating frequency	Master, TX only			8	MHz
		Master, RX and TX			4	
		Slave, RX only			8	
		Slave, RX and TX			4	

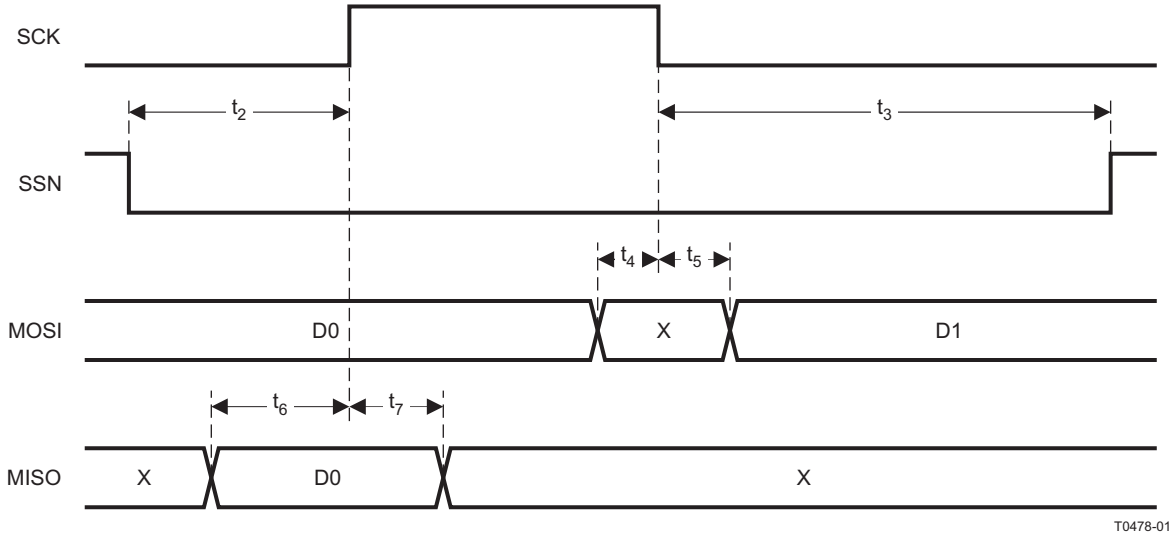

Figure 3. SPI Master AC Characteristics

Copyright © 2012–2013, Texas Instruments Incorporated

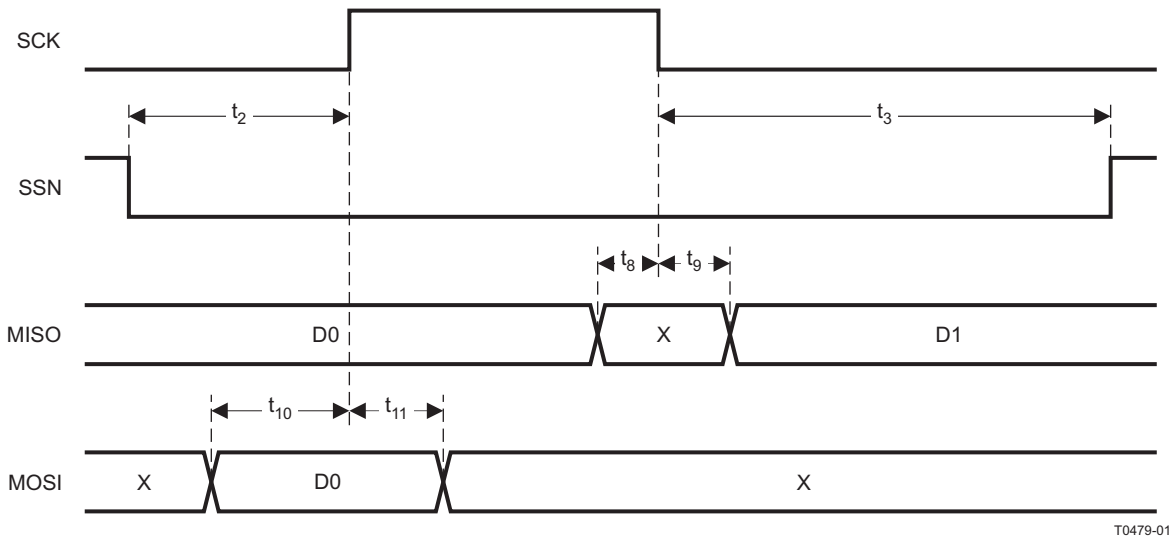

Figure 4. SPI Slave AC Characteristics

DEBUG INTERFACE AC CHARACTERISTICS

T_A = –40°C to 85°C, VDD = 2 V to 3.6 V

PARAMETER		TEST CONDITIONS	MIN	TYP	MAX	UNIT
f_{clk_dbg}	Debug clock frequency (see Figure 5)				12	MHz
t_1	Allowed high pulse on clock (see Figure 5)		35			ns
t_2	Allowed low pulse on clock (see Figure 5)		35			ns
t_3	EXT_RESET_N low to first falling edge on debug clock (see Figure 7)		167			ns
t_4	Falling edge on clock to EXT_RESET_N high (see Figure 7)		83			ns
t_5	EXT_RESET_N high to first debug command (see Figure 7)		83			ns
t_6	Debug data setup (see Figure 6)		2			ns
t_7	Debug data hold (see Figure 6)		4			ns
t_8	Clock-to-data delay (see Figure 6)	Load = 10 pF			30	ns

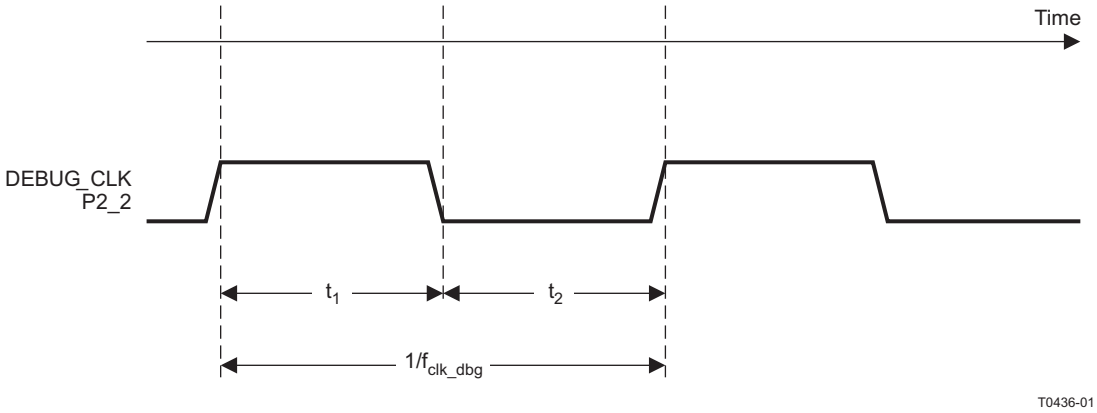

Figure 5. Debug Clock – Basic Timing

Copyright © 2012–2013, Texas Instruments Incorporated

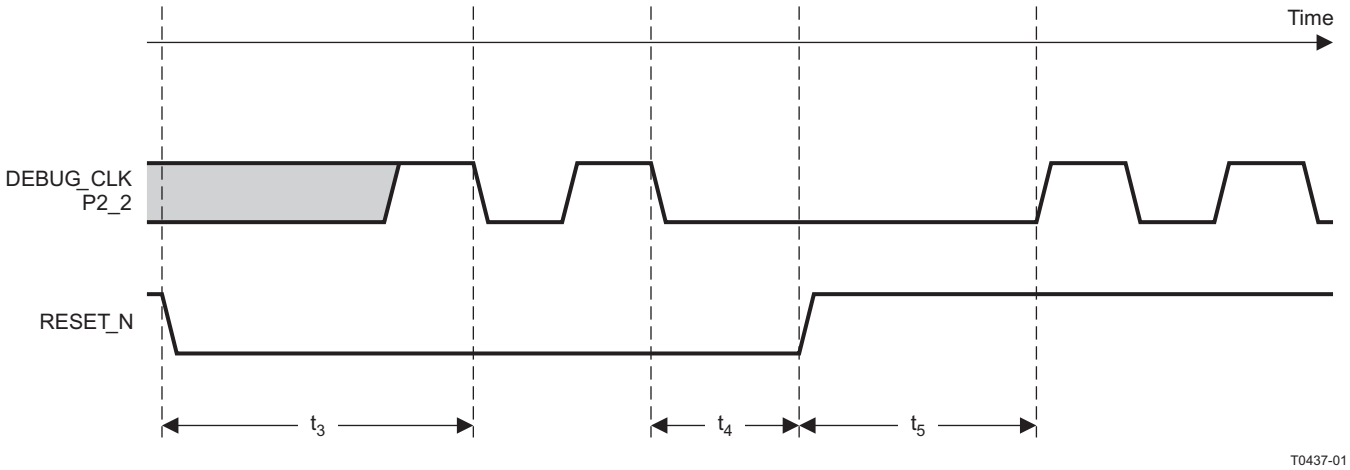

Figure 6. Debug Enable Timing

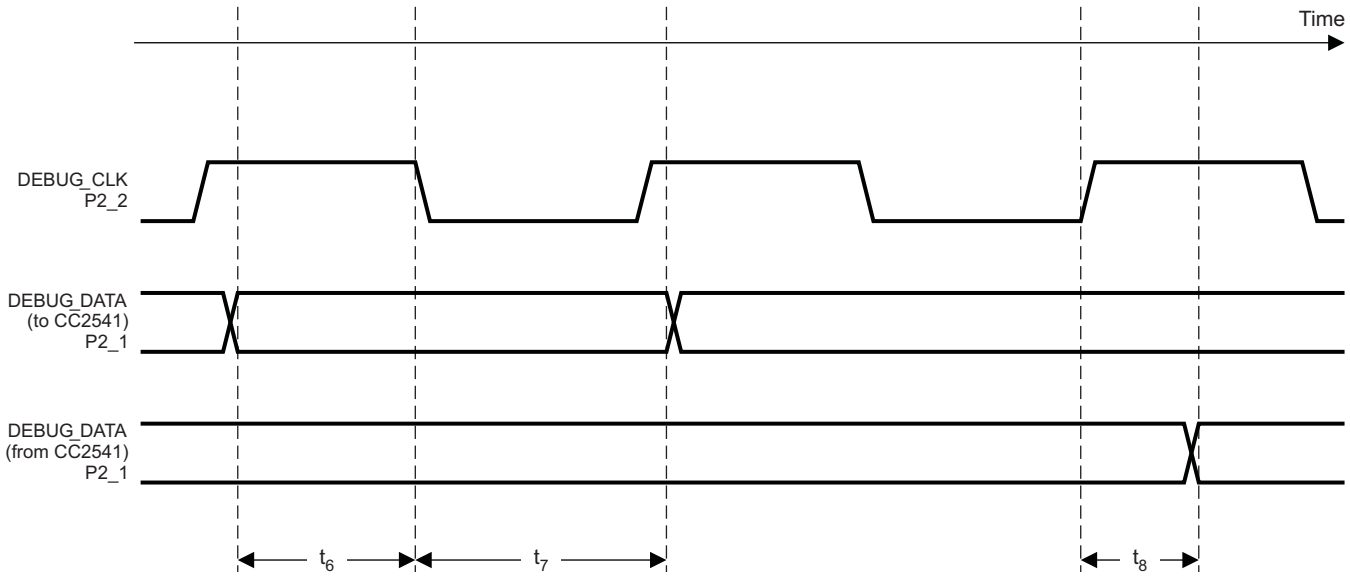

Figure 7. Data Setup and Hold Timing

TIMER INPUTS AC CHARACTERISTICS

T_A = –40°C to 85°C, VDD = 2 V to 3.6 V

PARAMETER	TEST CONDITIONS	MIN	TYP	MAX	UNIT
Input capture pulse duration	Synchronizers determine the shortest input pulse that can be recognized. The synchronizers operate at the current system clock rate (16 MHz or 32 MHz).	1.5			t_{SYSCLK}

Copyright © 2012–2013, Texas Instruments Incorporated

DC CHARACTERISTICS

T_A = 25°C, VDD = 3 V

PARAMETER	TEST CONDITIONS	MIN	TYP	MAX	UNIT
Logic-0 input voltage				0.5	V
Logic-1 input voltage		2.4			V
Logic-0 input current	Input equals 0 V	–50		50	nA
Logic-1 input current	Input equals VDD	–50		50	nA
I/O-pin pullup and pulldown resistors			20		kΩ
Logic-0 output voltage, 4- mA pins	Output load 4 mA			0.5	V
Logic-1 output voltage, 4-mA pins	Output load 4 mA	2.5			V
Logic-0 output voltage, 20- mA pins	Output load 20 mA			0.5	V
Logic-1 output voltage, 20-mA pins	Output load 20 mA	2.5			V

DEVICE INFORMATION

PIN DESCRIPTIONS

The CC2541 pinout is shown in Figure 8 and a short description of the pins follows.

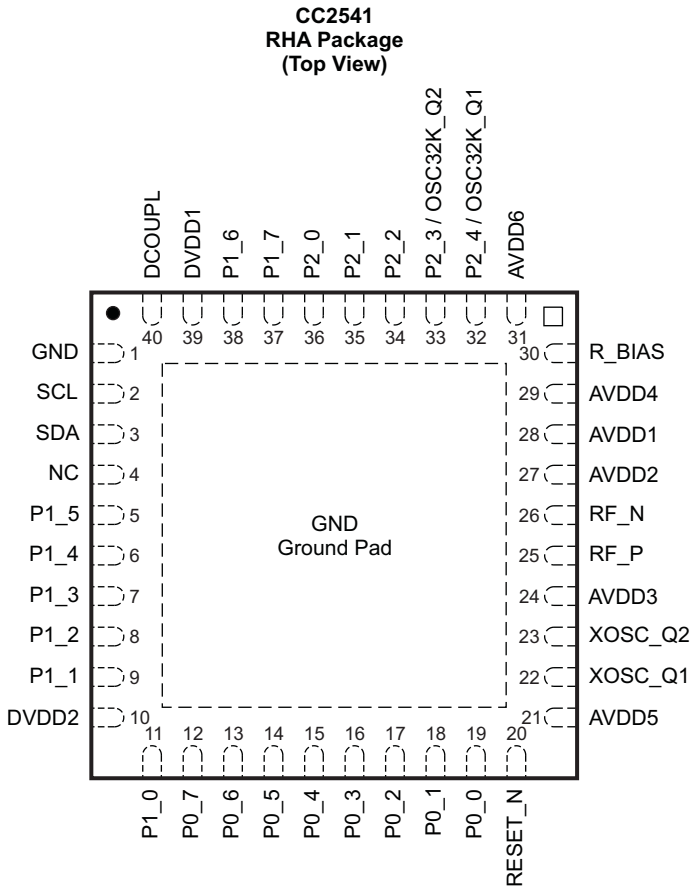

NOTE: The exposed ground pad must be connected to a solid ground plane, as this is the ground connection for the chip.

Figure 8. Pinout Top View

Copyright © 2012–2013, Texas Instruments Incorporated

PIN DESCRIPTIONS

PIN NAME	PIN	PIN TYPE	DESCRIPTION
AVDD1	28	Power (analog)	2-V–3.6-V analog power-supply connection
AVDD2	27	Power (analog)	2-V–3.6-V analog power-supply connection
AVDD3	24	Power (analog)	2-V–3.6-V analog power-supply connection
AVDD4	29	Power (analog)	2-V–3.6-V analog power-supply connection
AVDD5	21	Power (analog)	2-V–3.6-V analog power-supply connection
AVDD6	31	Power (analog)	2-V–3.6-V analog power-supply connection
DCOUPL	40	Power (digital)	1.8-V digital power-supply decoupling. Do not use for supplying external circuits.
DVDD1	39	Power (digital)	2-V–3.6-V digital power-supply connection
DVDD2	10	Power (digital)	2-V–3.6-V digital power-supply connection
GND	1	Ground pin	Connect to GND
GND	—	Ground	The ground pad must be connected to a solid ground plane.
NC	4	Unused pins	Not connected
P0_0	19	Digital I/O	Port 0.0
P0_1	18	Digital I/O	Port 0.1
P0_2	17	Digital I/O	Port 0.2
P0_3	16	Digital I/O	Port 0.3
P0_4	15	Digital I/O	Port 0.4
P0_5	14	Digital I/O	Port 0.5
P0_6	13	Digital I/O	Port 0.6
P0_7	12	Digital I/O	Port 0.7
P1_0	11	Digital I/O	Port 1.0 – 20-mA drive capability
P1_1	9	Digital I/O	Port 1.1 – 20-mA drive capability
P1_2	8	Digital I/O	Port 1.2
P1_3	7	Digital I/O	Port 1.3
P1_4	6	Digital I/O	Port 1.4
P1_5	5	Digital I/O	Port 1.5
P1_6	38	Digital I/O	Port 1.6
P1_7	37	Digital I/O	Port 1.7
P2_0	36	Digital I/O	Port 2.0
P2_1/DD	35	Digital I/O	Port 2.1 / debug data
P2_2/DC	34	Digital I/O	Port 2.2 / debug clock
P2_3/ OSC32K_Q2	33	Digital I/O, Analog I/O	Port 2.3/32.768 kHz XOSC
P2_4/ OSC32K_Q1	32	Digital I/O, Analog I/O	Port 2.4/32.768 kHz XOSC
RBIAS	30	Analog I/O	External precision bias resistor for reference current
RESET_N	20	Digital input	Reset, active-low
RF_N	26	RF I/O	Negative RF input signal to LNA during RX Negative RF output signal from PA during TX
RF_P	25	RF I/O	Positive RF input signal to LNA during RX Positive RF output signal from PA during TX
SCL	2	I^2C clock or digital I/O	Can be used as I^2C clock pin or digital I/O. Leave floating if not used. If grounded disable pull up
SDA	3	I^2C clock or digital I/O	Can be used as I^2C data pin or digital I/O. Leave floating if not used. If grounded disable pull up
XOSC_Q1	22	Analog I/O	32-MHz crystal oscillator pin 1 or external clock input
XOSC_Q2	23	Analog I/O	32-MHz crystal oscillator pin 2

Copyright © 2012–2013, Texas Instruments Incorporated

BLOCK DIAGRAM

A block diagram of the CC2541 is shown in Figure 9. The modules can be roughly divided into one of three categories: CPU-related modules; modules related to power, test, and clock distribution; and radio-related modules. In the following subsections, a short description of each module is given.

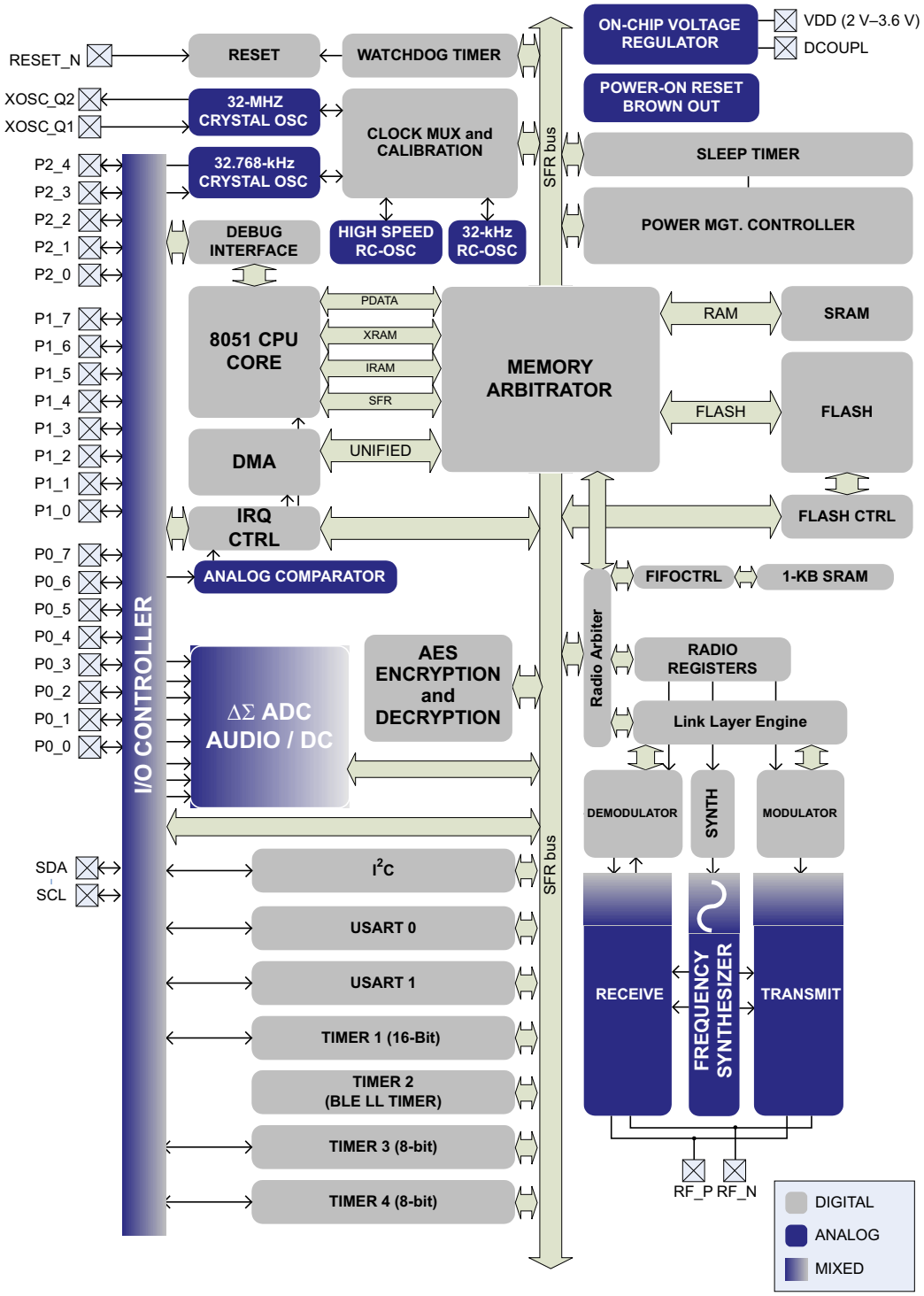

Figure 9. CC2541 Block Diagram

Copyright © 2012–2013, Texas Instruments Incorporated

BLOCK DESCRIPTIONS

A block diagram of the CC2541 is shown in Figure 9. The modules can be roughly divided into one of three categories: CPU-related modules; modules related to power, test, and clock distribution; and radio-related modules. In the following subsections, a short description of each module is given.

CPU and Memory

The **8051 CPU core** is a single-cycle 8051-compatible core. It has three different memory access busses (SFR, DATA, and CODE/XDATA), a debug interface, and an 18-input extended interrupt unit.

The **memory arbiter** is at the heart of the system, as it connects the CPU and DMA controller with the physical memories and all peripherals through the SFR bus. The memory arbiter has four memory-access points, access of which can map to one of three physical memories: an SRAM, flash memory, and XREG/SFR registers. It is responsible for performing arbitration and sequencing between simultaneous memory accesses to the same physical memory.

The **SFR bus** is drawn conceptually in Figure 9 as a common bus that connects all hardware peripherals to the memory arbiter. The SFR bus in the block diagram also provides access to the radio registers in the radio register bank, even though these are indeed mapped into XDATA memory space.

The **8-KB SRAM** maps to the DATA memory space and to parts of the XDATA memory spaces. The SRAM is an ultralow-power SRAM that retains its contents even when the digital part is powered off (power mode 2 and mode 3).

The **128/256 KB flash block** provides in-circuit programmable non-volatile program memory for the device, and maps into the CODE and XDATA memory spaces.

Peripherals

Writing to the flash block is performed through a **flash controller** that allows page-wise erasure and 4-bytewise programming. See User Guide for details on the flash controller.

A versatile five-channel **DMA controller** is available in the system, accesses memory using the XDATA memory space, and thus has access to all physical memories. Each channel (trigger, priority, transfer mode, addressing mode, source and destination pointers, and transfer count) is configured with DMA descriptors that can be located anywhere in memory. Many of the hardware peripherals (AES core, flash controller, USARTs, timers, ADC interface, etc.) can be used with the DMA controller for efficient operation by performing data transfers between a single SFR or XREG address and flash/SRAM.

Each CC2541 contains a unique 48-bit IEEE address that can be used as the public device address for a *Bluetooth* device. Designers are free to use this address, or provide their own, as described in the *Bluetooth* specfication.

The **interrupt controller** services a total of 18 interrupt sources, divided into six interrupt groups, each of which is associated with one of four interrupt priorities. I/O and sleep timer interrupt requests are serviced even if the device is in a sleep mode (power modes 1 and 2) by bringing the CC2541 back to the active mode.

The **debug interface** implements a proprietary two-wire serial interface that is used for in-circuit debugging. Through this debug interface, it is possible to erase or program the entire flash memory, control which oscillators are enabled, stop and start execution of the user program, execute instructions on the 8051 core, set code breakpoints, and single-step through instructions in the code. Using these techniques, it is possible to perform in-circuit debugging and external flash programming elegantly.

The **I/O controller** is responsible for all general-purpose I/O pins. The CPU can configure whether peripheral modules control certain pins or whether they are under software control, and if so, whether each pin is configured as an input or output and if a pullup or pulldown resistor in the pad is connected. Each peripheral that connects to the I/O pins can choose between two different I/O pin locations to ensure flexibility in various applications.

The **sleep timer** is an ultralow-power timer that can either use an external 32.768-kHz crystal oscillator or an internal 32.753-kHz RC oscillator. The sleep timer runs continuously in all operating modes except power mode 3. Typical applications of this timer are as a real-time counter or as a wake-up timer to get out of power mode 1 or mode 2.

A built-in **watchdog timer** allows the CC2541 to reset itself if the firmware hangs. When enabled by software, the watchdog timer must be cleared periodically; otherwise, it resets the device when it times out.

Copyright © 2012–2013, Texas Instruments Incorporated

Timer 1 is a 16-bit timer with timer/counter/PWM functionality. It has a programmable prescaler, a 16-bit period value, and five individually programmable counter/capture channels, each with a 16-bit compare value. Each of the counter/capture channels can be used as a PWM output or to capture the timing of edges on input signals. It can also be configured in IR generation mode, where it counts timer 3 periods and the output is ANDed with the output of timer 3 to generate modulated consumer IR signals with minimal CPU interaction.

Timer 2 is a 40-bit timer. It has a 16-bit counter with a configurable timer period and a 24-bit overflow counter that can be used to keep track of the number of periods that have transpired. A 40-bit capture register is also used to record the exact time at which a start-of-frame delimiter is received/transmitted or the exact time at which transmission ends. There are two 16-bit output compare registers and two 24-bit overflow compare registers that can be used to give exact timing for start of RX or TX to the radio or general interrupts.

Timer 3 and timer 4 are 8-bit timers with timer/counter/PWM functionality. They have a programmable prescaler, an 8-bit period value, and one programmable counter channel with an 8-bit compare value. Each of the counter channels can be used as PWM output.

USART 0 and USART 1 are each configurable as either an SPI master/slave or a UART. They provide double buffering on both RX and TX and hardware flow control and are thus well suited to high-throughput full-duplex applications. Each USART has its own high-precision baud-rate generator, thus leaving the ordinary timers free for other uses. When configured as SPI slaves, the USARTs sample the input signal using SCK directly instead of using some oversampling scheme, and are thus well-suited for high data rates.

The **AES encryption/decryption core** allows the user to encrypt and decrypt data using the AES algorithm with 128-bit keys. The AES core also supports ECB, CBC, CFB, OFB, CTR, and CBC-MAC, as well as hardware support for CCM.

The **ADC** supports 7 to 12 bits of resolution with a corresponding range of bandwidths from 30-kHz to 4-kHz, respectively. DC and audio conversions with up to eight input channels (I/O controller pins) are possible. The inputs can be selected as single-ended or differential. The reference voltage can be internal, AVDD, or a single-ended or differential external signal. The ADC also has a temperature-sensor input channel. The ADC can automate the process of periodic sampling or conversion over a sequence of channels.

The **I^2C** module provides a digital peripheral connection with two pins and supports both master and slave operation. I^2C support is compliant with the NXP I^2C specification version 2.1 and supports standard mode (up to 100 kbps) and fast mode (up to 400 kbps). In addition, 7-bit device addressing modes are supported, as well as master and slave modes.

The ultralow-power **analog comparator** enables applications to wake up from PM2 or PM3 based on an analog signal. Both inputs are brought out to pins; the reference voltage must be provided externally. The comparator output is connected to the I/O controller interrupt detector and can be treated by the MCU as a regular I/O pin interrupt.

Copyright © 2012–2013, Texas Instruments Incorporated

TYPICAL CHARACTERISTICS

RX CURRENT vs TEMPERATURE

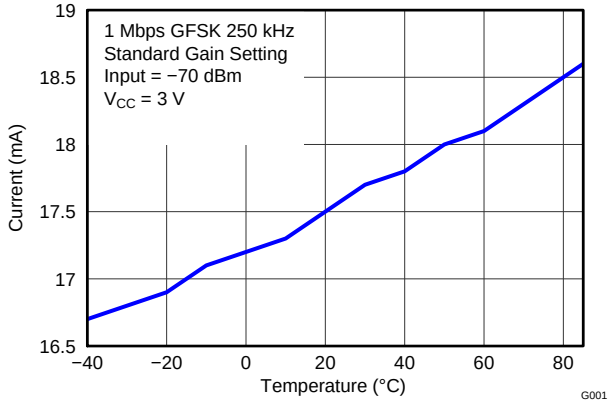

Figure 10.

TX CURRENT vs TEMPERATURE

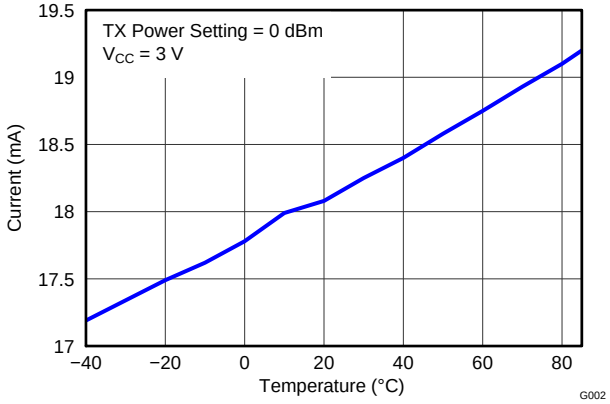

Figure 11.

RX SENSITIVITY vs TEMPERATURE

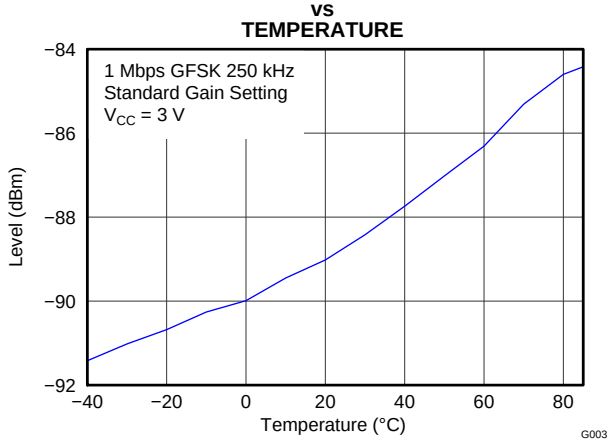

Figure 12.

TX POWER vs TEMPERATURE

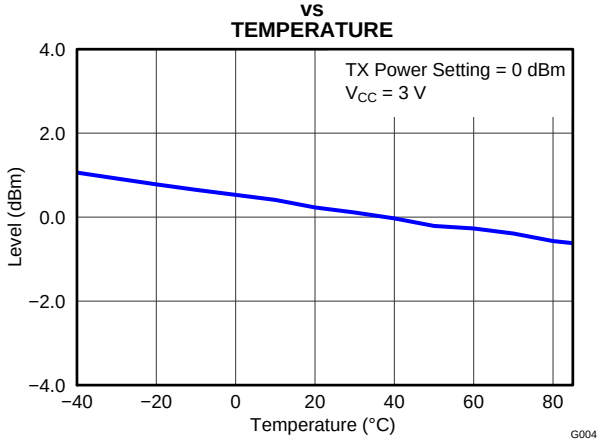

Figure 13.

RX CURRENT vs SUPPLY VOLTAGE

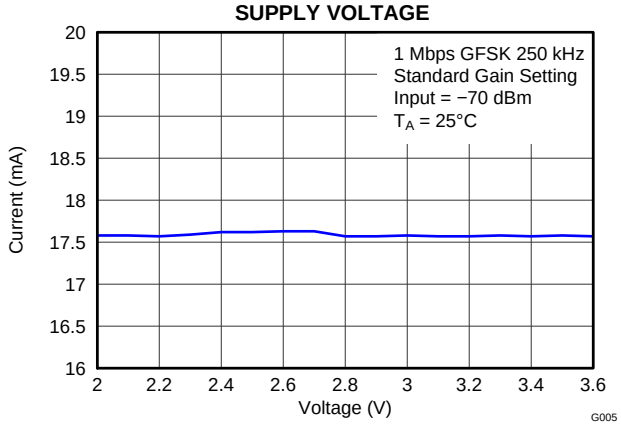

Figure 14.

TX CURRENT vs SUPPLY VOLTAGE

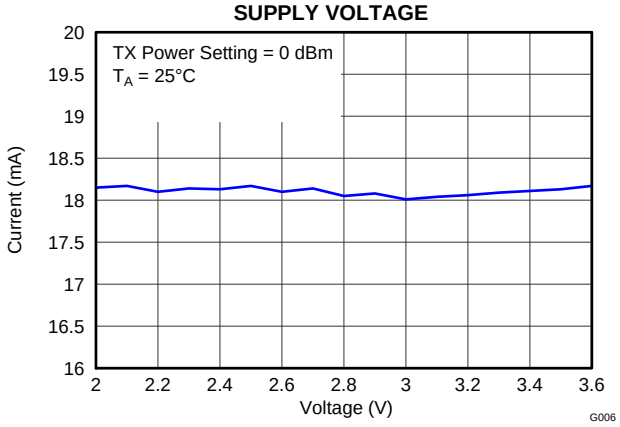

Figure 15.

Copyright © 2012–2013, Texas Instruments Incorporated

TYPICAL CHARACTERISTICS (continued)

RX SENSITIVITY vs SUPPLY VOLTAGE

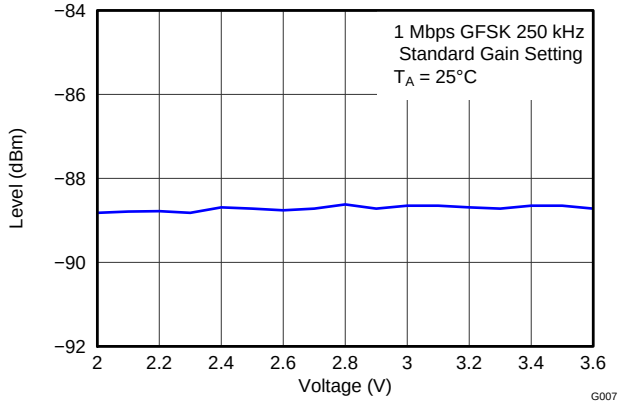

Figure 16.

TX POWER vs SUPPLY VOLTAGE

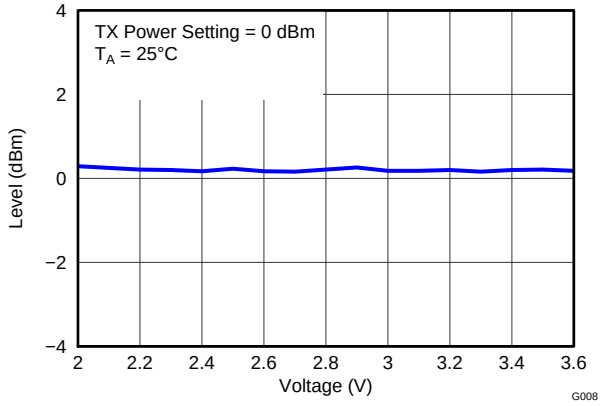

Figure 17.

RX SENSITIVITY vs FREQUENCY

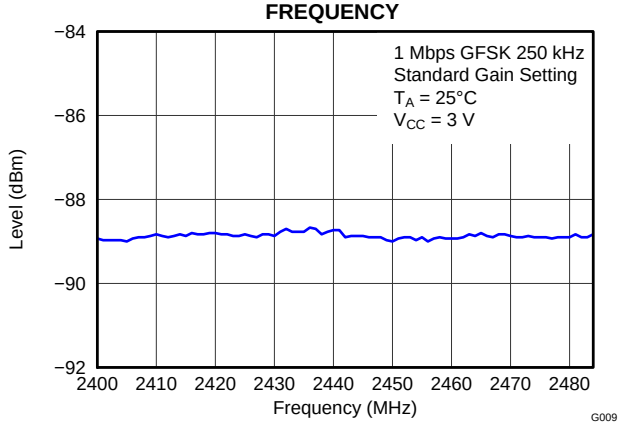

Figure 18.

TX POWER vs FREQUENCY

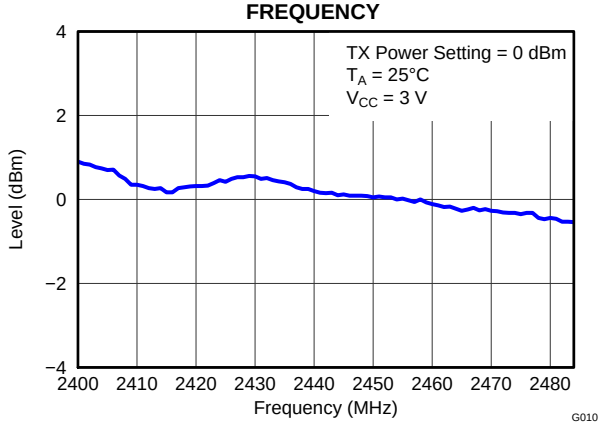

Figure 19.

Table 1. Output Power(1)(2)

TXPOWER Setting	Typical Output Power (dBm)
0xE1	0
0xD1	–2
0xC1	–4
0xB1	–6
0xA1	–8
0x91	–10
0x81	–12
0x71	–14
0x61	–16
0x51	–18
0x41	–20
0x31	–23

(1) Measured on Texas Instruments CC2541 EM reference design with T_A = 25°C, VDD = 3 V and f_c = 2440 MHz. See SWRU191 for recommended register settings.
(2) 1 Mbsp, GFSK, 250-kHz deviation, Bluetooth™ low energy mode, 1% BER

Copyright © 2012–2013, Texas Instruments Incorporated

Table 2. Output Power and Current Consumption

Typical Output Power (dBm)	Typical Current Consumption (mA)(1)	Typical Current Consumption With TPS62730 (mA)(2)
0	18.2	14.3
–20	16.8	13.1

(1) Measured on Texas Instruments CC2541 EM reference design with T_A = 25°C, VDD = 3 V and f_c = 2440 MHz. See SWRU191 for recommended register settings.
(2) Measured on Texas Instruments CC2541 TPS62730 EM reference design with T_A = 25°C, VDD = 3 V and f_c = 2440 MHz. See SWRU191 for recommended register settings.

TYPICAL CURRENT SAVINGS WHEN USING TPS62730

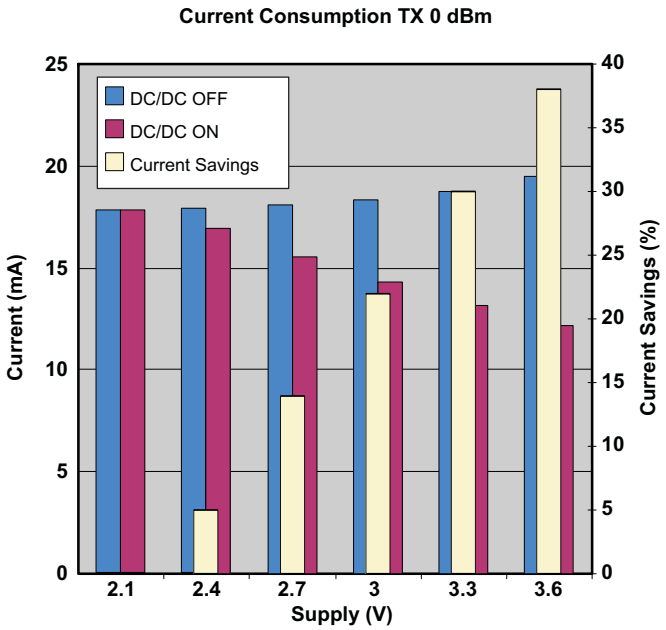

Figure 20. Current Savings in TX at Room Temperature

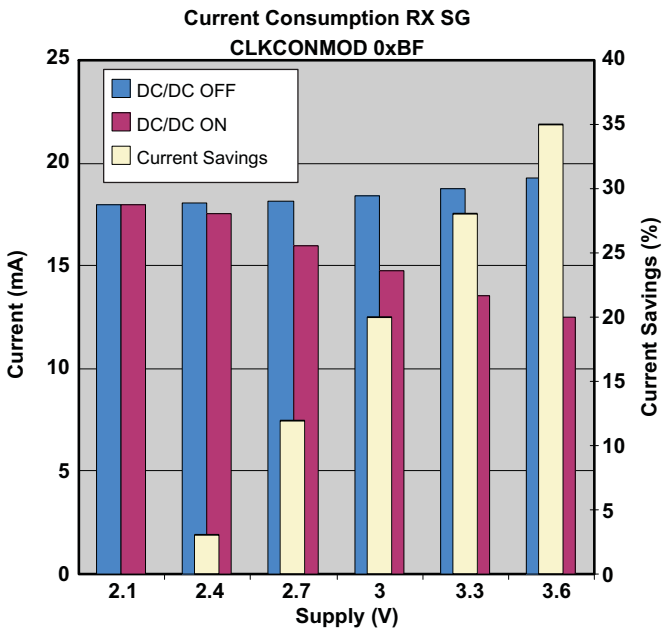

Figure 21. Current Savings in RX at Room Temperature

The application note (SWRA365) has information regarding the CC2541 and TPS62730 combo board and the current savings that can be achieved using the combo board.

Copyright © 2012–2013, Texas Instruments Incorporated

APPLICATION INFORMATION

Few external components are required for the operation of the CC2541. A typical application circuit is shown in Figure 22.

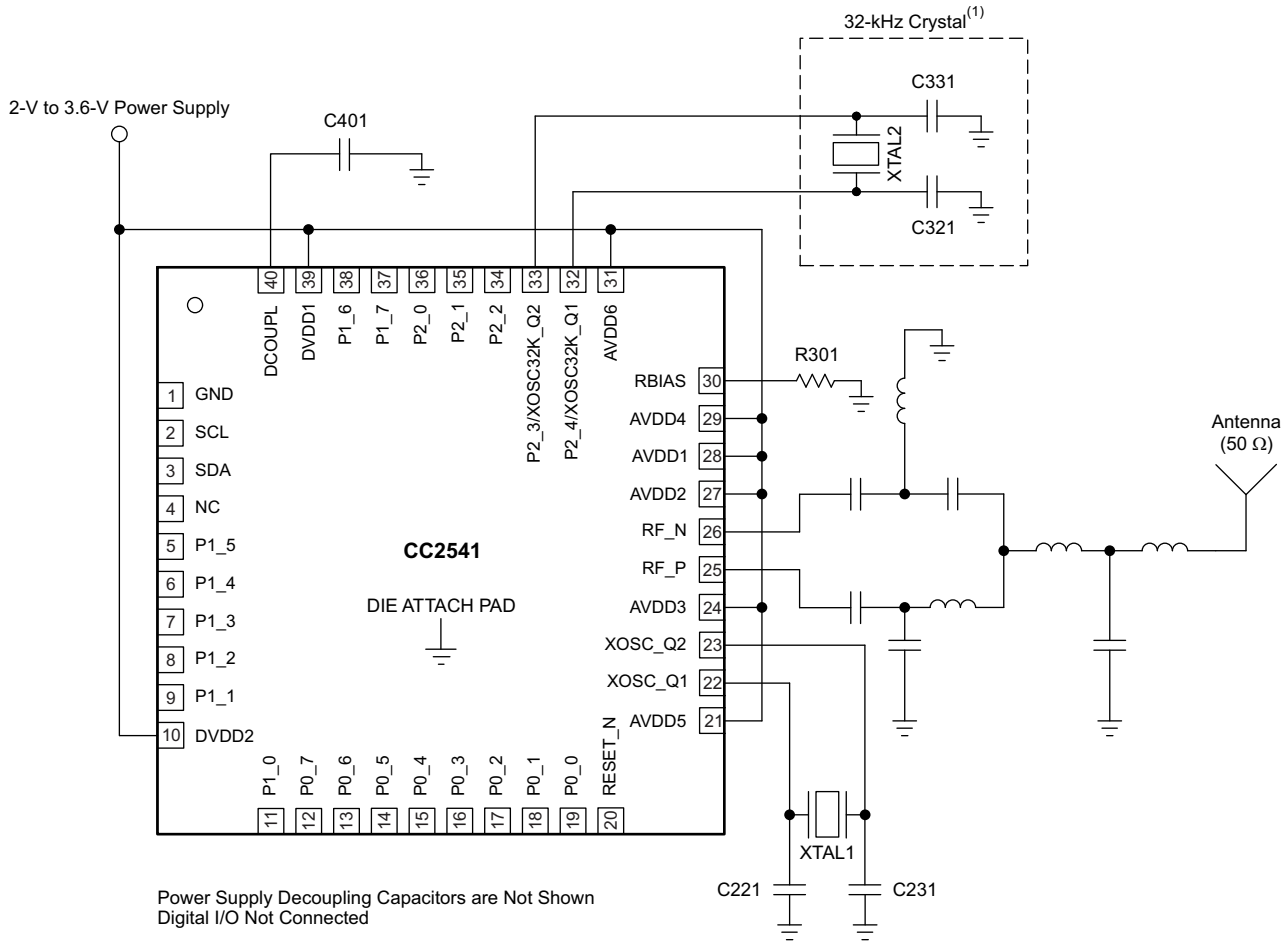

(1) 32-kHz crystal is mandatory when running the BLE protocol stack in low-power modes, except if the link layer is in the standby state (Vol. 6 Part B Section 1.1 in [1]).

NOTE: Different antenna alternatives will be provided as reference designs.

Figure 22. CC2541 Application Circuit

Table 3. Overview of External Components (Excluding Supply Decoupling Capacitors)

Component	Description	Value
C401	Decoupling capacitor for the internal 1.8-V digital voltage regulator	1 µF
R301	Precision resistor ±1%, used for internal biasing	56 kΩ

Input/Output Matching

When using an unbalanced antenna such as a monopole, a balun should be used to optimize performance. The balun can be implemented using low-cost discrete inductors and capacitors. See reference design, CC2541EM, for recommended balun.

Copyright © 2012–2013, Texas Instruments Incorporated

Crystal

An external 32-MHz crystal, XTAL1, with two loading capacitors (C221 and C231) is used for the 32-MHz crystal oscillator. See 32-MHz CRYSTAL OSCILLATOR for details. The load capacitance seen by the 32-MHz crystal is given by:

$$C_L = \frac{1}{\frac{1}{C_{221}} + \frac{1}{C_{231}}} + C_{parasitic} \tag{1}$$

XTAL2 is an optional 32.768-kHz crystal, with two loading capacitors (C321 and C331) used for the 32.768-kHz crystal oscillator. The 32.768-kHz crystal oscillator is used in applications where both very low sleep-current consumption and accurate wake-up times are needed. The load capacitance seen by the 32.768-kHz crystal is given by:

$$C_L = \frac{1}{\frac{1}{C_{321}} + \frac{1}{C_{331}}} + C_{parasitic} \tag{2}$$

A series resistor may be used to comply with the ESR requirement.

On-Chip 1.8-V Voltage Regulator Decoupling

The 1.8-V on-chip voltage regulator supplies the 1.8-V digital logic. This regulator requires a decoupling capacitor (C401) for stable operation.

Power-Supply Decoupling and Filtering

Proper power-supply decoupling must be used for optimum performance. The placement and size of the decoupling capacitors and the power supply filtering are very important to achieve the best performance in an application. TI provides a compact reference design that should be followed very closely.

References

1. *Bluetooth*® Core Technical Specification document, version 4.0
   http://www.bluetooth.com/SiteCollectionDocuments/Core_V40.zip
2. CC253x System-on-Chip Solution for 2.4-GHz IEEE 802.15.4 and ZigBee® Applications/CC2541 System-on-Chip Solution for 2.4-GHz *Bluetooth* low energy Applications (SWRU191)
3. Current Savings in CC254x Using the TPS62730 (SWRA365).

Additional Information

Texas Instruments offers a wide selection of cost-effective, low-power RF solutions for proprietary and standard-based wireless applications for use in industrial and consumer applications. Our selection includes RF transceivers, RF transmitters, RF front ends, and System-on-Chips as well as various software solutions for the sub-1- and 2.4-GHz frequency bands.

In addition, Texas Instruments provides a large selection of support collateral such as development tools, technical documentation, reference designs, application expertise, customer support, third-party and university programs.

The Low-Power RF E2E Online Community provides technical support forums, videos and blogs, and the chance to interact with fellow engineers from all over the world.

With a broad selection of product solutions, end application possibilities, and a range of technical support, Texas Instruments offers the broadest low-power RF portfolio. We make RF easy!

The following subsections point to where to find more information.

Copyright © 2012–2013, Texas Instruments Incorporated

Texas Instruments Low-Power RF Web Site

- Forums, videos, and blogs
- RF design help
- E2E interaction

Join us today at www.ti.com/lprf-forum.

Texas Instruments Low-Power RF Developer Network

Texas Instruments has launched an extensive network of low-power RF development partners to help customers speed up their application development. The network consists of recommended companies, RF consultants, and independent design houses that provide a series of hardware module products and design services, including:

- RF circuit, low-power RF, and ZigBee® design services
- Low-power RF and ZigBee module solutions and development tools
- RF certification services and RF circuit manufacturing

Need help with modules, engineering services or development tools?

Search the Low-Power RF Developer Network tool to find a suitable partner.
www.ti.com/lprfnetwork

Low-Power RF eNewsletter

The Low-Power RF eNewsletter keeps you up-to-date on new products, news releases, developers' news, and other news and events associated with low-power RF products from TI. The Low-Power RF eNewsletter articles include links to get more online information.

Sign up today on
www.ti.com/lprfnewsletter

REVISION HISTORY

Changes from Original (January 2012) to Revision A	Page

Changes from Revision A (February 2012) to Revision B	Page
• Changed the Temperature coefficient Unit value From: mV/°C To: / 0.1°C	10
• Changed Figure 22 text From: Optional 32-kHz Crystal To: 32-kHz Crystal	24

Changes from Revision B (August 2012) to Revision C	Page
• Changed the "Internal reference voltage" TYP value From 1.15 V To: 1.24 V	12
• Changed pin XOSC_Q1 Pin Type From Analog O To: Analog I/O, and changed the Pin Description	17
• Changed pin XOSC_Q2 Pin Type From Analog O To: Analog I/O	17

Changes from Revision C (November 2012) to Revision D	Page
• Changed the RF TRANSMIT SECTION, Output power TYP value From: –20 To: –23	8
• Changed the RF TRANSMIT SECTION, Programmable output power range TYP value From: 20 To: 23	8
• Added row 0x31 to Table 1	22

Copyright © 2012–2013, Texas Instruments Incorporated

PACKAGING INFORMATION

Orderable part number	Status (1)	Material type (2)	Package | Pins	Package qty | Carrier	RoHS (3)	Lead finish/ Ball material (4)	MSL rating/ Peak reflow (5)	Op temp (°C)	Part marking (6)
CC2541F128RHAR	Active	Production	VQFN (RHA) | 40	2500 | LARGE T&R	Yes	NIPDAU | NIPDAUAG	Level-3-260C-168 HR	-40 to 85	CC2541 F128
CC2541F128RHAR.A	Active	Production	VQFN (RHA) | 40	2500 | LARGE T&R	Yes	NIPDAU	Level-3-260C-168 HR	-40 to 85	CC2541 F128
CC2541F128RHAR.B	Active	Production	VQFN (RHA) | 40	2500 | LARGE T&R	Yes	NIPDAU	Level-3-260C-168 HR	-40 to 85	CC2541 F128
CC2541F128RHAT	Active	Production	VQFN (RHA) | 40	250 | SMALL T&R	Yes	NIPDAU | NIPDAUAG	Level-3-260C-168 HR	-40 to 85	CC2541 F128
CC2541F128RHAT.A	Active	Production	VQFN (RHA) | 40	250 | SMALL T&R	Yes	NIPDAU	Level-3-260C-168 HR	-40 to 85	CC2541 F128
CC2541F128RHAT.B	Active	Production	VQFN (RHA) | 40	250 | SMALL T&R	Yes	NIPDAU	Level-3-260C-168 HR	-40 to 85	CC2541 F128
CC2541F256RHAR	Active	Production	VQFN (RHA) | 40	2500 | LARGE T&R	Yes	NIPDAU | NIPDAUAG	Level-3-260C-168 HR	-40 to 85	CC2541 F256
CC2541F256RHAR.A	Active	Production	VQFN (RHA) | 40	2500 | LARGE T&R	Yes	NIPDAU	Level-3-260C-168 HR	-40 to 85	CC2541 F256
CC2541F256RHAR.B	Active	Production	VQFN (RHA) | 40	2500 | LARGE T&R	Yes	NIPDAU	Level-3-260C-168 HR	-40 to 85	CC2541 F256
CC2541F256RHAT	Active	Production	VQFN (RHA) | 40	250 | SMALL T&R	Yes	NIPDAU | NIPDAUAG	Level-3-260C-168 HR	-40 to 85	CC2541 F256
CC2541F256RHAT.A	Active	Production	VQFN (RHA) | 40	250 | SMALL T&R	Yes	NIPDAU	Level-3-260C-168 HR	-40 to 85	CC2541 F256
CC2541F256RHAT.B	Active	Production	VQFN (RHA) | 40	250 | SMALL T&R	Yes	NIPDAU	Level-3-260C-168 HR	-40 to 85	CC2541 F256

(1) **Status:** For more details on status, see our product life cycle.

(2) **Material type:** When designated, preproduction parts are prototypes/experimental devices, and are not yet approved or released for full production. Testing and final process, including without limitation quality assurance, reliability performance testing, and/or process qualification, may not yet be complete, and this item is subject to further changes or possible discontinuation. If available for ordering, purchases will be subject to an additional waiver at checkout, and are intended for early internal evaluation purposes only. These items are sold without warranties of any kind.

(3) **RoHS values:** Yes, No, RoHS Exempt. See the TI RoHS Statement for additional information and value definition.

(4) **Lead finish/Ball material:** Parts may have multiple material finish options. Finish options are separated by a vertical ruled line. Lead finish/Ball material values may wrap to two lines if the finish value exceeds the maximum column width.

(5) **MSL rating/Peak reflow:** The moisture sensitivity level ratings and peak solder (reflow) temperatures. In the event that a part has multiple moisture sensitivity ratings, only the lowest level per JEDEC standards is shown. Refer to the shipping label for the actual reflow temperature that will be used to mount the part to the printed circuit board.

(6) **Part marking:** There may be an additional marking, which relates to the logo, the lot trace code information, or the environmental category of the part.

Multiple part markings will be inside parentheses. Only one part marking contained in parentheses and separated by a "~" will appear on a part. If a line is indented then it is a continuation of the previous line and the two combined represent the entire part marking for that device.

Important Information and Disclaimer: The information provided on this page represents TI's knowledge and belief as of the date that it is provided. TI bases its knowledge and belief on information provided by third parties, and makes no representation or warranty as to the accuracy of such information. Efforts are underway to better integrate information from third parties. TI has taken and continues to take reasonable steps to provide representative and accurate information but may not have conducted destructive testing or chemical analysis on incoming materials and chemicals. TI and TI suppliers consider certain information to be proprietary, and thus CAS numbers and other limited information may not be available for release.

In no event shall TI's liability arising out of such information exceed the total purchase price of the TI part(s) at issue in this document sold by TI to Customer on an annual basis.

OTHER QUALIFIED VERSIONS OF CC2541 :

- Automotive : CC2541-Q1

NOTE: Qualified Version Definitions:

- Automotive - Q100 devices qualified for high-reliability automotive applications targeting zero defects

TAPE AND REEL INFORMATION

REEL DIMENSIONS

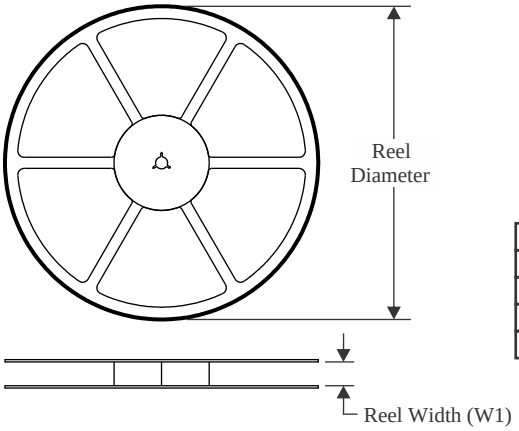

TAPE DIMENSIONS

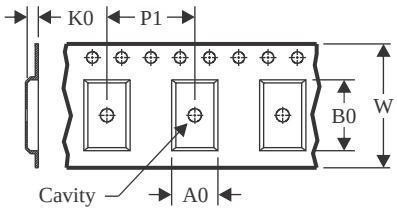

A0	Dimension designed to accommodate the component width
B0	Dimension designed to accommodate the component length
K0	Dimension designed to accommodate the component thickness
W	Overall width of the carrier tape
P1	Pitch between successive cavity centers

QUADRANT ASSIGNMENTS FOR PIN 1 ORIENTATION IN TAPE

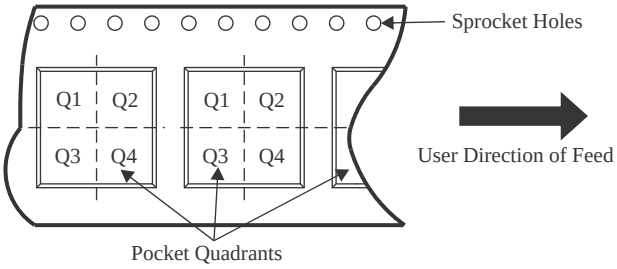

*All dimensions are nominal

Device	Package Type	Package Drawing	Pins	SPQ	Reel Diameter (mm)	Reel Width W1 (mm)	A0 (mm)	B0 (mm)	K0 (mm)	P1 (mm)	W (mm)	Pin1 Quadrant
CC2541F128RHAR	VQFN	RHA	40	2500	330.0	16.4	6.3	6.3	1.1	12.0	16.0	Q2
CC2541F128RHAT	VQFN	RHA	40	250	180.0	16.4	6.3	6.3	1.1	12.0	16.0	Q2

TAPE AND REEL BOX DIMENSIONS

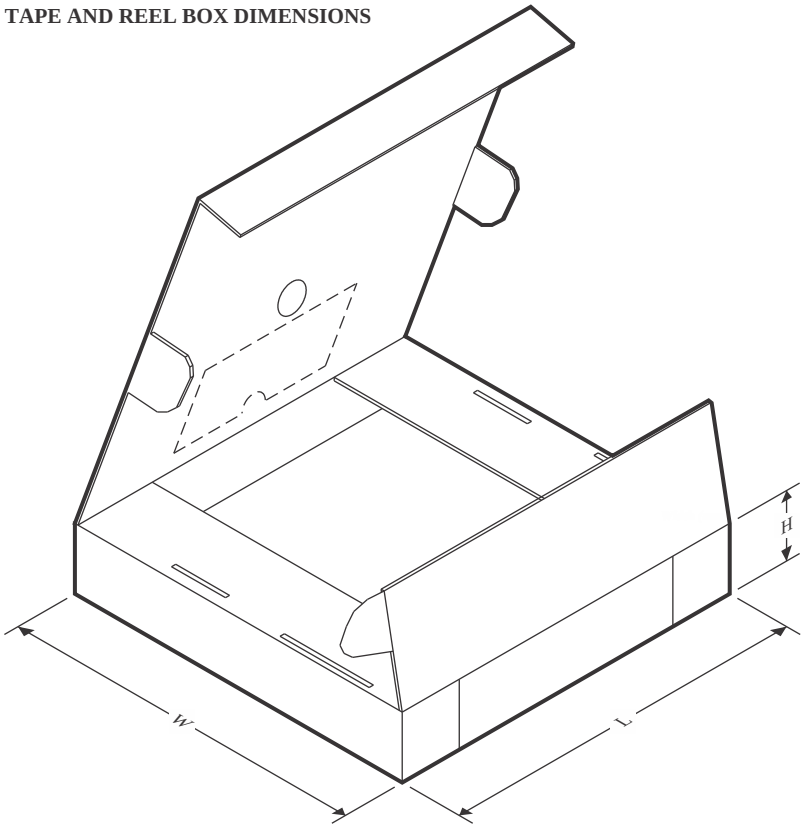

*All dimensions are nominal

Device	Package Type	Package Drawing	Pins	SPQ	Length (mm)	Width (mm)	Height (mm)
CC2541F128RHAR	VQFN	RHA	40	2500	360.0	360.0	36.0
CC2541F128RHAT	VQFN	RHA	40	250	210.0	185.0	35.0

TRAY

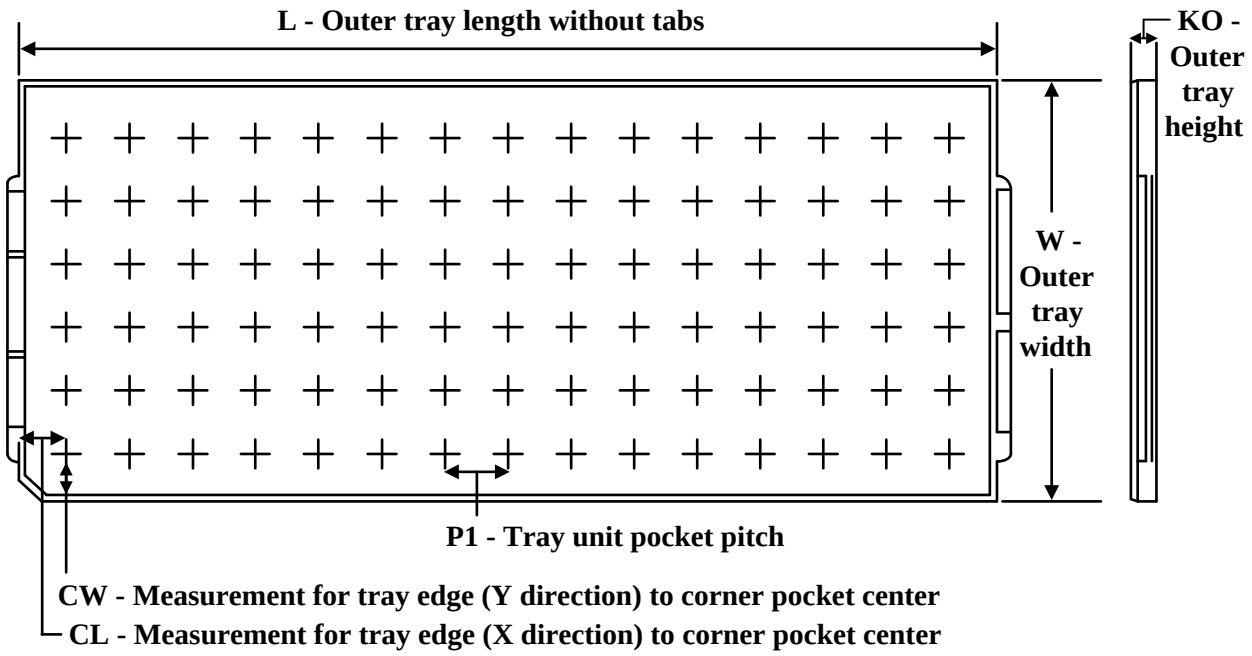

Chamfer on Tray corner indicates Pin 1 orientation of packed units.

*All dimensions are nominal

Device	Package Name	Package Type	Pins	SPQ	Unit array matrix	Max temperature (°C)	L (mm)	W (mm)	K0 (µm)	P1 (mm)	CL (mm)	CW (mm)
CC2541F128RHAR	RHA	VQFN	40	2500	35 X 14	150	315	135.9	7620	8.8	7.9	8.15
CC2541F128RHAR	RHA	VQFN	40	2500	35 X 14	150	315	135.9	7620	8.8	7.9	8.15
CC2541F128RHAR.A	RHA	VQFN	40	2500	35 X 14	150	315	135.9	7620	8.8	7.9	8.15
CC2541F128RHAR.A	RHA	VQFN	40	2500	35 X 14	150	315	135.9	7620	8.8	7.9	8.15
CC2541F128RHAR.B	RHA	VQFN	40	2500	35 X 14	150	315	135.9	7620	8.8	7.9	8.15
CC2541F128RHAR.B	RHA	VQFN	40	2500	35 X 14	150	315	135.9	7620	8.8	7.9	8.15
CC2541F128RHAT	RHA	VQFN	40	250	35 X 14	150	315	135.9	7620	8.8	7.9	8.15
CC2541F128RHAT.A	RHA	VQFN	40	250	35 X 14	150	315	135.9	7620	8.8	7.9	8.15
CC2541F128RHAT.B	RHA	VQFN	40	250	35 X 14	150	315	135.9	7620	8.8	7.9	8.15
CC2541F256RHAR	RHA	VQFN	40	2500	35 X 14	150	315	135.9	7620	8.8	7.9	8.15
CC2541F256RHAR	RHA	VQFN	40	2500	35 X 14	150	315	135.9	7620	8.8	7.9	8.15
CC2541F256RHAR.A	RHA	VQFN	40	2500	35 X 14	150	315	135.9	7620	8.8	7.9	8.15
CC2541F256RHAR.A	RHA	VQFN	40	2500	35 X 14	150	315	135.9	7620	8.8	7.9	8.15
CC2541F256RHAR.B	RHA	VQFN	40	2500	35 X 14	150	315	135.9	7620	8.8	7.9	8.15
CC2541F256RHAR.B	RHA	VQFN	40	2500	35 X 14	150	315	135.9	7620	8.8	7.9	8.15
CC2541F256RHAT	RHA	VQFN	40	250	35 X 14	150	315	135.9	7620	8.8	7.9	8.15
CC2541F256RHAT.A	RHA	VQFN	40	250	35 X 14	150	315	135.9	7620	8.8	7.9	8.15

Device	Package Name	Package Type	Pins	SPQ	Unit array matrix	Max temperature (°C)	L (mm)	W (mm)	K0 (µm)	P1 (mm)	CL (mm)	CW (mm)
CC2541F256RHAT.B	RHA	VQFN	40	250	35 X 14	150	315	135.9	7620	8.8	7.9	8.15

GENERIC PACKAGE VIEW

RHA 40

VQFN - 1 mm max height

6 x 6, 0.5 mm pitch

PLASTIC QUAD FLATPACK - NO LEAD

This image is a representation of the package family, actual package may vary.
Refer to the product data sheet for package details.

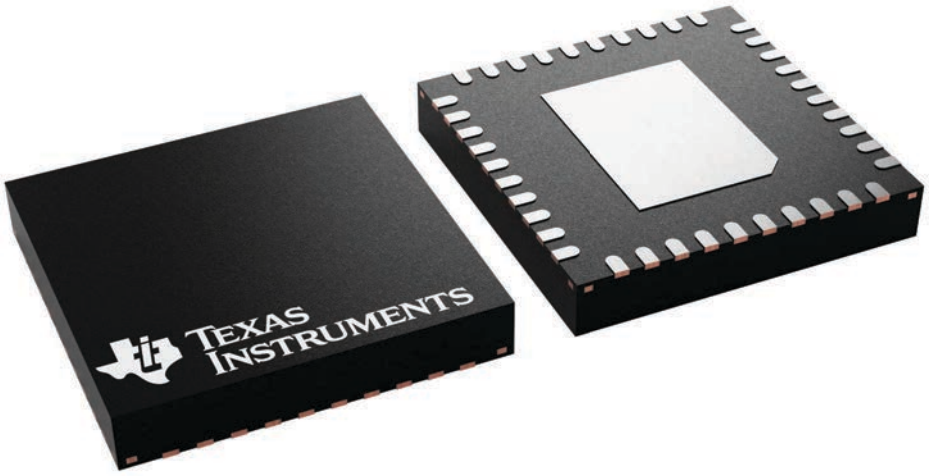

4225870/A

RHA0040H

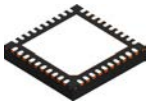

PACKAGE OUTLINE

VQFN - 1 mm max height

PLASTIC QUAD FLATPACK - NO LEAD

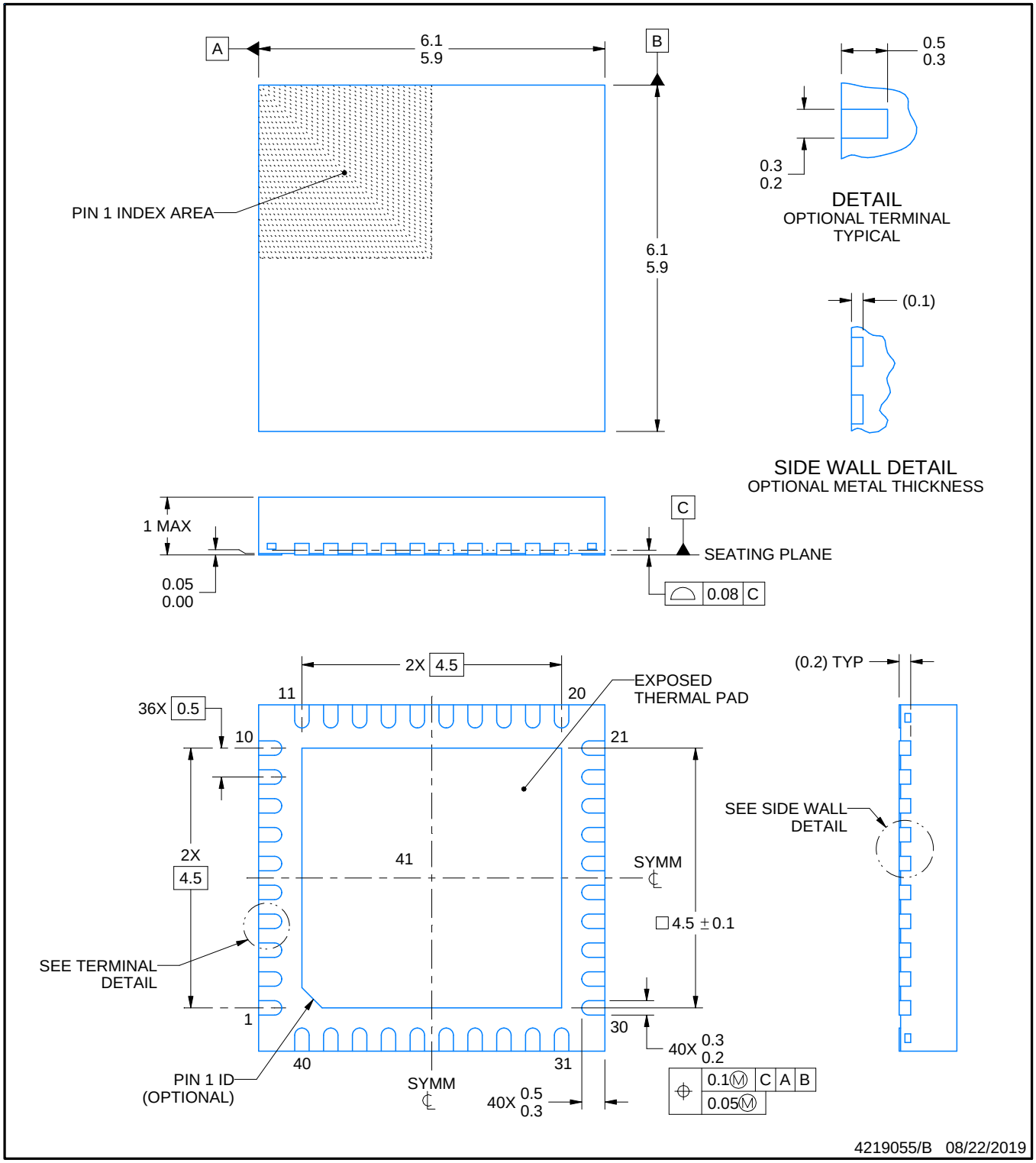

NOTES:

1. All linear dimensions are in millimeters. Any dimensions in parenthesis are for reference only. Dimensioning and tolerancing per ASME Y14.5M.
2. This drawing is subject to change without notice.
3. The package thermal pad must be soldered to the printed circuit board for thermal and mechanical performance.

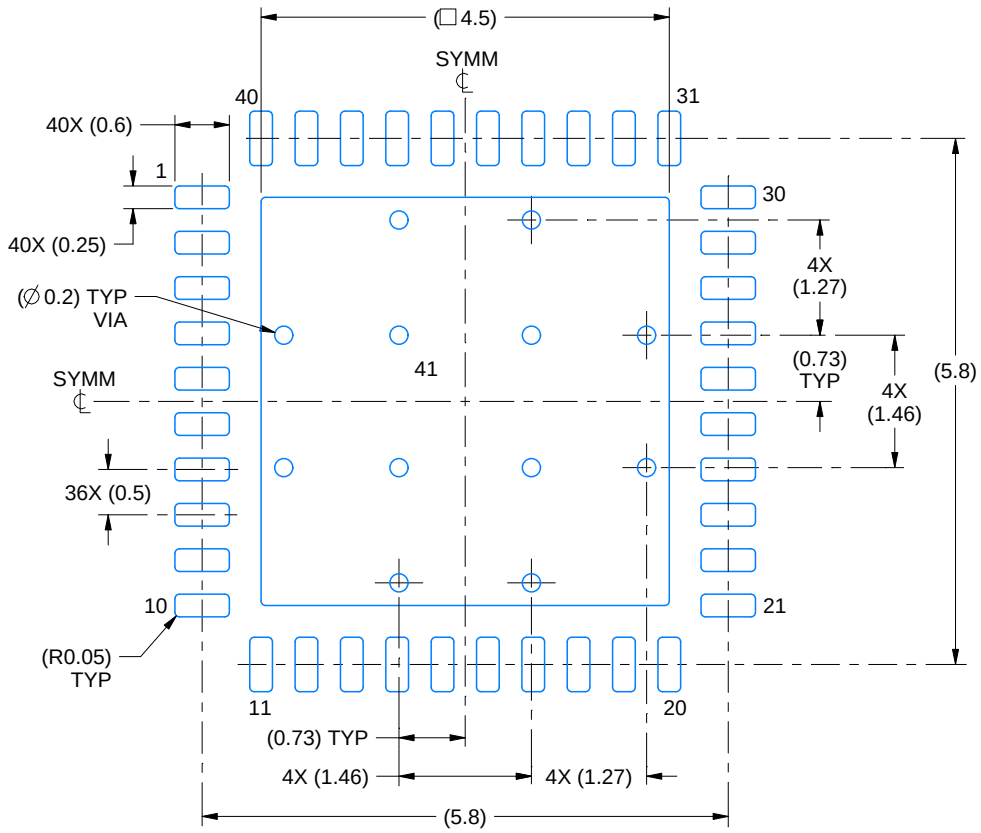

LAND PATTERN EXAMPLE
EXPOSED METAL SHOWN
SCALE:12X

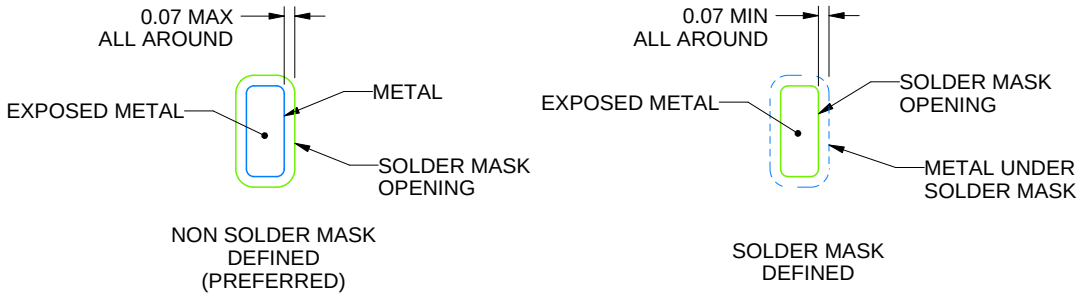

SOLDER MASK DETAILS

4219055/B 08/22/2019

NOTES: (continued)

4. This package is designed to be soldered to a thermal pad on the board. For more information, see Texas Instruments literature number SLUA271 (www.ti.com/lit/slua271).
5. Vias are optional depending on application, refer to device data sheet. If any vias are implemented, refer to their locations shown on this view. It is recommended that vias under paste be filled, plugged or tented.

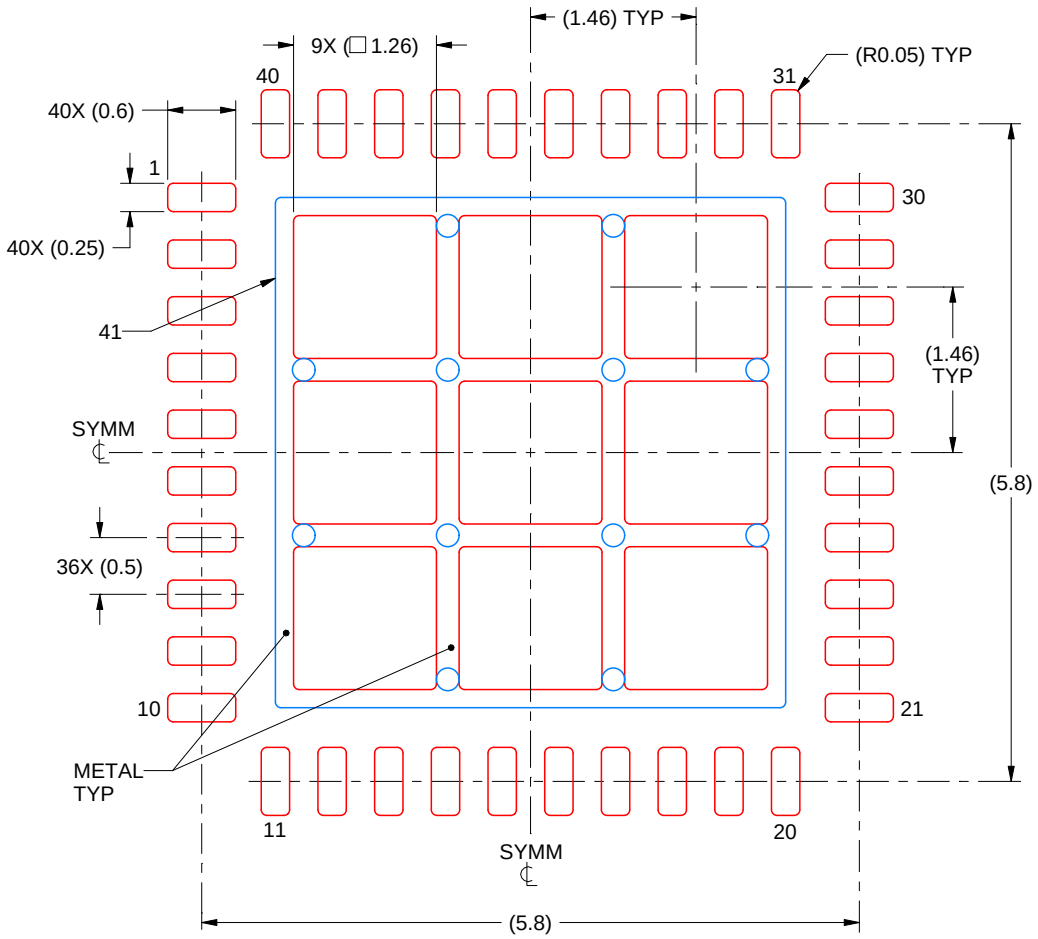

SOLDER PASTE EXAMPLE
BASED ON 0.125 mm THICK STENCIL

EXPOSED PAD 41:
70% PRINTED SOLDER COVERAGE BY AREA
SCALE:15X

4219055/B 08/22/2019

NOTES: (continued)

6. Laser cutting apertures with trapezoidal walls and rounded corners may offer better paste release. IPC-7525 may have alternate design recommendations.

重要通知和免责声明

TI“按原样”提供技术和可靠性数据（包括数据表）、设计资源（包括参考设计）、应用或其他设计建议、网络工具、安全信息和其他资源，不保证没有瑕疵且不做出任何明示或暗示的担保，包括但不限于对适销性、与某特定用途的适用性或不侵犯任何第三方知识产权的暗示担保。

这些资源可供使用 TI 产品进行设计的熟练开发人员使用。您将自行承担以下全部责任：(1) 针对您的应用选择合适的 TI 产品，(2) 设计、验证并测试您的应用，(3) 确保您的应用满足相应标准以及任何其他安全、安保法规或其他要求。

这些资源如有变更，恕不另行通知。TI 授权您仅可将这些资源用于研发本资源所述的 TI 产品的相关应用。严禁以其他方式对这些资源进行复制或展示。您无权使用任何其他 TI 知识产权或任何第三方知识产权。对于因您对这些资源的使用而对 TI 及其代表造成的任何索赔、损害、成本、损失和债务，您将全额赔偿，TI 对此概不负责。

TI 提供的产品受 TI 销售条款)、TI 通用质量指南 或 ti.com 上其他适用条款或 TI 产品随附的其他适用条款的约束。TI 提供这些资源并不会扩展或以其他方式更改 TI 针对 TI 产品发布的适用的担保或担保免责声明。 除非德州仪器 (TI) 明确将某产品指定为定制产品或客户特定产品，否则其产品均为按确定价格收入目录的标准通用器件。

TI 反对并拒绝您可能提出的任何其他或不同的条款。

版权所有 © 2026，德州仪器 (TI) 公司

最后更新日期：2025 年 10 月