Stellaris® LM3S2678 Microcontroller

DATA SHEET

DS-LM3S2678-15852.2743
SPMS052H

Copyright © 2007-2014
Texas Instruments Incorporated

Copyright

Copyright © 2007-2014 Texas Instruments Incorporated All rights reserved. Stellaris and StellarisWare® are registered trademarks of Texas Instruments Incorporated. ARM and Thumb are registered trademarks and Cortex is a trademark of ARM Limited. Other names and brands may be claimed as the property of others.

PRODUCTION DATA information is current as of publication date. Products conform to specifications per the terms of Texas Instruments standard warranty. Production processing does not necessarily include testing of all parameters.

Please be aware that an important notice concerning availability, standard warranty, and use in critical applications of Texas Instruments semiconductor products and disclaimers thereto appears at the end of this data sheet.

Texas Instruments Incorporated
108 Wild Basin, Suite 350
Austin, TX 78746
http://www.ti.com/stellaris
http://www-k.ext.ti.com/sc/technical-support/product-information-centers.htm

Table of Contents

Revision History **24**
About This Document **29**
Audience 29
About This Manual 29
Related Documents 29
Documentation Conventions 30
1 Architectural Overview **32**
1.1 Product Features 32
1.2 Target Applications 40
1.3 High-Level Block Diagram 41
1.4 Functional Overview 43
1.4.1 ARM Cortex™-M3 43
1.4.2 Motor Control Peripherals 44
1.4.3 Analog Peripherals 45
1.4.4 Serial Communications Peripherals 45
1.4.5 System Peripherals 46
1.4.6 Memory Peripherals 47
1.4.7 Additional Features 48
1.4.8 Hardware Details 48
2 The Cortex-M3 Processor **49**
2.1 Block Diagram 50
2.2 Overview 51
2.2.1 System-Level Interface 51
2.2.2 Integrated Configurable Debug 51
2.2.3 Trace Port Interface Unit (TPIU) 52
2.2.4 Cortex-M3 System Component Details 52
2.3 Programming Model 53
2.3.1 Processor Mode and Privilege Levels for Software Execution 53
2.3.2 Stacks 53
2.3.3 Register Map 54
2.3.4 Register Descriptions 55
2.3.5 Exceptions and Interrupts 68
2.3.6 Data Types 68
2.4 Memory Model 68
2.4.1 Memory Regions, Types and Attributes 70
2.4.2 Memory System Ordering of Memory Accesses 70
2.4.3 Behavior of Memory Accesses 70
2.4.4 Software Ordering of Memory Accesses 71
2.4.5 Bit-Banding 72
2.4.6 Data Storage 74
2.4.7 Synchronization Primitives 75
2.5 Exception Model 76
2.5.1 Exception States 77
2.5.2 Exception Types 77
2.5.3 Exception Handlers 80

2.5.4 Vector Table ... 80
2.5.5 Exception Priorities ... 81
2.5.6 Interrupt Priority Grouping ... 82
2.5.7 Exception Entry and Return ... 82
2.6 Fault Handling ... 84
2.6.1 Fault Types ... 85
2.6.2 Fault Escalation and Hard Faults ... 85
2.6.3 Fault Status Registers and Fault Address Registers ... 86
2.6.4 Lockup ... 86
2.7 Power Management ... 86
2.7.1 Entering Sleep Modes ... 87
2.7.2 Wake Up from Sleep Mode ... 87
2.8 Instruction Set Summary ... 88

3 Cortex-M3 Peripherals ... 91
3.1 Functional Description ... 91
3.1.1 System Timer (SysTick) ... 91
3.1.2 Nested Vectored Interrupt Controller (NVIC) ... 92
3.1.3 System Control Block (SCB) ... 94
3.1.4 Memory Protection Unit (MPU) ... 94
3.2 Register Map ... 99
3.3 System Timer (SysTick) Register Descriptions ... 101
3.4 NVIC Register Descriptions ... 105
3.5 System Control Block (SCB) Register Descriptions ... 118
3.6 Memory Protection Unit (MPU) Register Descriptions ... 145

4 JTAG Interface ... 155
4.1 Block Diagram ... 156
4.2 Signal Description ... 156
4.3 Functional Description ... 157
4.3.1 JTAG Interface Pins ... 157
4.3.2 JTAG TAP Controller ... 158
4.3.3 Shift Registers ... 159
4.3.4 Operational Considerations ... 159
4.4 Initialization and Configuration ... 162
4.5 Register Descriptions ... 162
4.5.1 Instruction Register (IR) ... 163
4.5.2 Data Registers ... 165

5 System Control ... 167
5.1 Signal Description ... 167
5.2 Functional Description ... 167
5.2.1 Device Identification ... 167
5.2.2 Reset Control ... 167
5.2.3 Non-Maskable Interrupt ... 171
5.2.4 Power Control ... 172
5.2.5 Clock Control ... 172
5.2.6 System Control ... 177
5.3 Initialization and Configuration ... 178
5.4 Register Map ... 179
5.5 Register Descriptions ... 180

6 Internal Memory ... 233
6.1 Block Diagram ... 233
6.2 Functional Description ... 233
6.2.1 SRAM Memory ... 233
6.2.2 ROM Memory ... 234
6.2.3 Flash Memory ... 234
6.3 Flash Memory Initialization and Configuration ... 237
6.3.1 Flash Programming ... 237
6.3.2 Nonvolatile Register Programming ... 237
6.4 Register Map ... 238
6.5 ROM Register Descriptions (System Control Offset) ... 239
6.6 Flash Register Descriptions (Flash Control Offset) ... 240
6.7 Flash Register Descriptions (System Control Offset) ... 248
7 Micro Direct Memory Access (µDMA) ... 263
7.1 Block Diagram ... 264
7.2 Functional Description ... 264
7.2.1 Channel Assigments ... 265
7.2.2 Priority ... 265
7.2.3 Arbitration Size ... 265
7.2.4 Request Types ... 265
7.2.5 Channel Configuration ... 266
7.2.6 Transfer Modes ... 268
7.2.7 Transfer Size and Increment ... 276
7.2.8 Peripheral Interface ... 276
7.2.9 Software Request ... 276
7.2.10 Interrupts and Errors ... 277
7.3 Initialization and Configuration ... 277
7.3.1 Module Initialization ... 277
7.3.2 Configuring a Memory-to-Memory Transfer ... 277
7.3.3 Configuring a Peripheral for Simple Transmit ... 279
7.3.4 Configuring a Peripheral for Ping-Pong Receive ... 280
7.4 Register Map ... 283
7.5 µDMA Channel Control Structure ... 284
7.6 µDMA Register Descriptions ... 290
8 General-Purpose Input/Outputs (GPIOs) ... 324
8.1 Signal Description ... 324
8.2 Functional Description ... 327
8.2.1 Data Control ... 328
8.2.2 Interrupt Control ... 329
8.2.3 Mode Control ... 330
8.2.4 Commit Control ... 330
8.2.5 Pad Control ... 330
8.2.6 Identification ... 331
8.3 Initialization and Configuration ... 331
8.4 Register Map ... 332
8.5 Register Descriptions ... 334
9 General-Purpose Timers ... 372
9.1 Block Diagram ... 373

9.2 Signal Description ... 374
9.3 Functional Description ... 374
9.3.1 GPTM Reset Conditions ... 374
9.3.2 32-Bit Timer Operating Modes ... 374
9.3.3 16-Bit Timer Operating Modes ... 376
9.4 Initialization and Configuration ... 379
9.4.1 32-Bit One-Shot/Periodic Timer Mode ... 379
9.4.2 32-Bit Real-Time Clock (RTC) Mode ... 380
9.4.3 16-Bit One-Shot/Periodic Timer Mode ... 380
9.4.4 16-Bit Input Edge Count Mode ... 381
9.4.5 16-Bit Input Edge Timing Mode ... 381
9.4.6 16-Bit PWM Mode ... 382
9.5 Register Map ... 382
9.6 Register Descriptions ... 383

10 Watchdog Timer ... 406
10.1 Block Diagram ... 407
10.2 Functional Description ... 407
10.3 Initialization and Configuration ... 408
10.4 Register Map ... 408
10.5 Register Descriptions ... 409

11 Analog-to-Digital Converter (ADC) ... 430
11.1 Block Diagram ... 430
11.2 Signal Description ... 431
11.3 Functional Description ... 432
11.3.1 Sample Sequencers ... 432
11.3.2 Module Control ... 432
11.3.3 Hardware Sample Averaging Circuit ... 433
11.3.4 Analog-to-Digital Converter ... 433
11.3.5 Differential Sampling ... 434
11.3.6 Internal Temperature Sensor ... 436
11.4 Initialization and Configuration ... 437
11.4.1 Module Initialization ... 437
11.4.2 Sample Sequencer Configuration ... 437
11.5 Register Map ... 438
11.6 Register Descriptions ... 439

12 Universal Asynchronous Receivers/Transmitters (UARTs) ... 466
12.1 Block Diagram ... 467
12.2 Signal Description ... 467
12.3 Functional Description ... 468
12.3.1 Transmit/Receive Logic ... 468
12.3.2 Baud-Rate Generation ... 468
12.3.3 Data Transmission ... 469
12.3.4 Serial IR (SIR) ... 469
12.3.5 FIFO Operation ... 470
12.3.6 Interrupts ... 471
12.3.7 Loopback Operation ... 472
12.3.8 DMA Operation ... 472
12.3.9 IrDA SIR block ... 472

12.4 Initialization and Configuration 472
12.5 Register Map 473
12.6 Register Descriptions 474

13 Synchronous Serial Interface (SSI) 509
13.1 Block Diagram 510
13.2 Signal Description 510
13.3 Functional Description 511
13.3.1 Bit Rate Generation 511
13.3.2 FIFO Operation 511
13.3.3 Interrupts 512
13.3.4 Frame Formats 512
13.3.5 DMA Operation 520
13.4 Initialization and Configuration 520
13.5 Register Map 521
13.6 Register Descriptions 522

14 Controller Area Network (CAN) Module 549
14.1 Block Diagram 550
14.2 Signal Description 550
14.3 Functional Description 551
14.3.1 Initialization 552
14.3.2 Operation 552
14.3.3 Transmitting Message Objects 553
14.3.4 Configuring a Transmit Message Object 553
14.3.5 Updating a Transmit Message Object 555
14.3.6 Accepting Received Message Objects 555
14.3.7 Receiving a Data Frame 555
14.3.8 Receiving a Remote Frame 556
14.3.9 Receive/Transmit Priority 556
14.3.10 Configuring a Receive Message Object 556
14.3.11 Handling of Received Message Objects 557
14.3.12 Handling of Interrupts 560
14.3.13 Test Mode 560
14.3.14 Bit Timing Configuration Error Considerations 562
14.3.15 Bit Time and Bit Rate 562
14.3.16 Calculating the Bit Timing Parameters 564
14.4 Register Map 567
14.5 CAN Register Descriptions 569

15 Pulse Width Modulator (PWM) 595
15.1 Block Diagram 596
15.2 Signal Description 597
15.3 Functional Description 597
15.3.1 PWM Timer 597
15.3.2 PWM Comparators 598
15.3.3 PWM Signal Generator 599
15.3.4 Dead-Band Generator 600
15.3.5 Interrupt/ADC-Trigger Selector 600
15.3.6 Synchronization Methods 600
15.3.7 Fault Conditions 601

15.3.8 Output Control Block ... 602
15.4 Initialization and Configuration ... 602
15.5 Register Map ... 603
15.6 Register Descriptions ... 605

16 Quadrature Encoder Interface (QEI) ... 643
16.1 Block Diagram ... 643
16.2 Signal Description ... 644
16.3 Functional Description ... 644
16.4 Initialization and Configuration ... 646
16.5 Register Map ... 647
16.6 Register Descriptions ... 648

17 Pin Diagram ... 661

18 Signal Tables ... 662
18.1 Signals by Pin Number ... 662
18.2 Signals by Signal Name ... 665
18.3 Signals by Function, Except for GPIO ... 668
18.4 GPIO Pins and Alternate Functions ... 670
18.5 Connections for Unused Signals ... 671

19 Operating Characteristics ... 672

20 Electrical Characteristics ... 673
20.1 DC Characteristics ... 673
20.1.1 Maximum Ratings ... 673
20.1.2 Recommended DC Operating Conditions ... 673
20.1.3 On-Chip Low Drop-Out (LDO) Regulator Characteristics ... 674
20.1.4 GPIO Module Characteristics ... 674
20.1.5 Power Specifications ... 674
20.1.6 Flash Memory Characteristics ... 675
20.2 AC Characteristics ... 676
20.2.1 Load Conditions ... 676
20.2.2 Clocks ... 676
20.2.3 JTAG and Boundary Scan ... 678
20.2.4 Reset ... 679
20.2.5 Sleep Modes ... 681
20.2.6 General-Purpose I/O (GPIO) ... 681
20.2.7 Analog-to-Digital Converter ... 681
20.2.8 Synchronous Serial Interface (SSI) ... 682

A Boot Loader ... 685
A.1 Boot Loader ... 685
A.2 Interfaces ... 685
A.2.1 UART ... 685
A.2.2 SSI ... 686
A.3 Packet Handling ... 686
A.3.1 Packet Format ... 686
A.3.2 Sending Packets ... 686
A.3.3 Receiving Packets ... 687
A.4 Commands ... 687
A.4.1 COMMAND_PING (0X20) ... 687

A.4.2 COMMAND_DOWNLOAD (0x21) ... 687
A.4.3 COMMAND_RUN (0x22) ... 688
A.4.4 COMMAND_GET_STATUS (0x23) ... 688
A.4.5 COMMAND_SEND_DATA (0x24) ... 688
A.4.6 COMMAND_RESET (0x25) ... 689

B ROM DriverLib Functions ... 690
B.1 DriverLib Functions Included in the Integrated ROM ... 690

C Register Quick Reference ... 702

D Ordering and Contact Information ... 727
D.1 Ordering Information ... 727
D.2 Part Markings ... 727
D.3 Kits ... 727
D.4 Support Information ... 728

E Package Information ... 729
E.1 64-Pin LQFP Package ... 729
E.1.1 Package Dimensions ... 729
E.1.2 Tray Dimensions ... 731
E.1.3 Tape and Reel Dimensions ... 732

List of Figures

Figure 1-1. Stellaris LM3S2678 Microcontroller High-Level Block Diagram 42
Figure 2-1. CPU Block Diagram 51
Figure 2-2. TPIU Block Diagram 52
Figure 2-3. Cortex-M3 Register Set 54
Figure 2-4. Bit-Band Mapping 74
Figure 2-5. Data Storage 75
Figure 2-6. Vector Table 81
Figure 2-7. Exception Stack Frame 83
Figure 3-1. SRD Use Example 97
Figure 4-1. JTAG Module Block Diagram 156
Figure 4-2. Test Access Port State Machine 159
Figure 4-3. IDCODE Register Format 165
Figure 4-4. BYPASS Register Format 165
Figure 4-5. Boundary Scan Register Format 166
Figure 5-1. Basic $\overline{RST}$ Configuration 169
Figure 5-2. External Circuitry to Extend Power-On Reset 169
Figure 5-3. Reset Circuit Controlled by Switch 170
Figure 5-4. Main Clock Tree 174
Figure 6-1. Flash Block Diagram 233
Figure 7-1. µDMA Block Diagram 264
Figure 7-2. Example of Ping-Pong DMA Transaction 269
Figure 7-3. Memory Scatter-Gather, Setup and Configuration 271
Figure 7-4. Memory Scatter-Gather, µDMA Copy Sequence 272
Figure 7-5. Peripheral Scatter-Gather, Setup and Configuration 274
Figure 7-6. Peripheral Scatter-Gather, µDMA Copy Sequence 275
Figure 8-1. Digital I/O Pads 327
Figure 8-2. Analog/Digital I/O Pads 328
Figure 8-3. GPIODATA Write Example 329
Figure 8-4. GPIODATA Read Example 329
Figure 9-1. GPTM Module Block Diagram 373
Figure 9-2. 16-Bit Input Edge Count Mode Example 377
Figure 9-3. 16-Bit Input Edge Time Mode Example 378
Figure 9-4. 16-Bit PWM Mode Example 379
Figure 10-1. WDT Module Block Diagram 407
Figure 11-1. ADC Module Block Diagram 431
Figure 11-2. Differential Sampling Range, V_{IN_ODD} = 1.5 V 435
Figure 11-3. Differential Sampling Range, V_{IN_ODD} = 0.75 V 435
Figure 11-4. Differential Sampling Range, V_{IN_ODD} = 2.25 V 436
Figure 11-5. Internal Temperature Sensor Characteristic 437
Figure 12-1. UART Module Block Diagram 467
Figure 12-2. UART Character Frame 468
Figure 12-3. IrDA Data Modulation 470
Figure 13-1. SSI Module Block Diagram 510
Figure 13-2. TI Synchronous Serial Frame Format (Single Transfer) 513
Figure 13-3. TI Synchronous Serial Frame Format (Continuous Transfer) 514
Figure 13-4. Freescale SPI Format (Single Transfer) with SPO=0 and SPH=0 514

Figure 13-5. Freescale SPI Format (Continuous Transfer) with SPO=0 and SPH=0 515
Figure 13-6. Freescale SPI Frame Format with SPO=0 and SPH=1 516
Figure 13-7. Freescale SPI Frame Format (Single Transfer) with SPO=1 and SPH=0 516
Figure 13-8. Freescale SPI Frame Format (Continuous Transfer) with SPO=1 and SPH=0 517
Figure 13-9. Freescale SPI Frame Format with SPO=1 and SPH=1 518
Figure 13-10. MICROWIRE Frame Format (Single Frame) 518
Figure 13-11. MICROWIRE Frame Format (Continuous Transfer) 519
Figure 13-12. MICROWIRE Frame Format, SSIFss Input Setup and Hold Requirements 520
Figure 14-1. CAN Controller Block Diagram 550
Figure 14-2. CAN Data/Remote Frame 551
Figure 14-3. Message Objects in a FIFO Buffer 559
Figure 14-4. CAN Bit Time 563
Figure 15-1. PWM Unit Diagram 596
Figure 15-2. PWM Module Block Diagram 597
Figure 15-3. PWM Count-Down Mode 598
Figure 15-4. PWM Count-Up/Down Mode 599
Figure 15-5. PWM Generation Example In Count-Up/Down Mode 599
Figure 15-6. PWM Dead-Band Generator 600
Figure 16-1. QEI Block Diagram 644
Figure 16-2. Quadrature Encoder and Velocity Predivider Operation 645
Figure 17-1. 64-Pin LQFP Package Pin Diagram 661
Figure 20-1. Load Conditions 676
Figure 20-2. JTAG Test Clock Input Timing 678
Figure 20-3. JTAG Test Access Port (TAP) Timing 679
Figure 20-4. External Reset Timing ($\overline{RST}$) 679
Figure 20-5. Power-On Reset Timing 680
Figure 20-6. Brown-Out Reset Timing 680
Figure 20-7. Software Reset Timing 680
Figure 20-8. Watchdog Reset Timing 680
Figure 20-9. ADC Input Equivalency Diagram 682
Figure 20-10. SSI Timing for TI Frame Format (FRF=01), Single Transfer Timing Measurement 683
Figure 20-11. SSI Timing for MICROWIRE Frame Format (FRF=10), Single Transfer 683
Figure 20-12. SSI Timing for SPI Frame Format (FRF=00), with SPH=1 684
Figure E-1. Stellaris LM3S2678 64-Pin LQFP Package 729
Figure E-2. 64-Pin LQFP Tray Dimensions 731
Figure E-3. 64-Pin LQFP Tape and Reel Dimensions 732

List of Tables

Table 1. Revision History ... 24
Table 2. Documentation Conventions ... 30
Table 2-1. Summary of Processor Mode, Privilege Level, and Stack Use ... 54
Table 2-2. Processor Register Map ... 55
Table 2-3. PSR Register Combinations ... 60
Table 2-4. Memory Map ... 68
Table 2-5. Memory Access Behavior ... 70
Table 2-6. SRAM Memory Bit-Banding Regions ... 73
Table 2-7. Peripheral Memory Bit-Banding Regions ... 73
Table 2-8. Exception Types ... 78
Table 2-9. Interrupts ... 79
Table 2-10. Exception Return Behavior ... 84
Table 2-11. Faults ... 85
Table 2-12. Fault Status and Fault Address Registers ... 86
Table 2-13. Cortex-M3 Instruction Summary ... 88
Table 3-1. Core Peripheral Register Regions ... 91
Table 3-2. Memory Attributes Summary ... 94
Table 3-3. TEX, S, C, and B Bit Field Encoding ... 97
Table 3-4. Cache Policy for Memory Attribute Encoding ... 98
Table 3-5. AP Bit Field Encoding ... 98
Table 3-6. Memory Region Attributes for Stellaris Microcontrollers ... 98
Table 3-7. Peripherals Register Map ... 99
Table 3-8. Interrupt Priority Levels ... 124
Table 3-9. Example SIZE Field Values ... 152
Table 4-1. JTAG_SWD_SWO Signals (64LQFP) ... 156
Table 4-2. JTAG Port Pins Reset State ... 157
Table 4-3. JTAG Instruction Register Commands ... 163
Table 5-1. System Control & Clocks Signals (64LQFP) ... 167
Table 5-2. Reset Sources ... 168
Table 5-3. Clock Source Options ... 173
Table 5-4. Possible System Clock Frequencies Using the SYSDIV Field ... 175
Table 5-5. Examples of Possible System Clock Frequencies Using the SYSDIV2 Field ... 175
Table 5-6. System Control Register Map ... 179
Table 5-7. RCC2 Fields that Override RCC fields ... 196
Table 6-1. Flash Protection Policy Combinations ... 235
Table 6-2. User-Programmable Flash Memory Resident Registers ... 238
Table 6-3. Flash Register Map ... 238
Table 7-1. DMA Channel Assignments ... 265
Table 7-2. Request Type Support ... 266
Table 7-3. Control Structure Memory Map ... 267
Table 7-4. Channel Control Structure ... 267
Table 7-5. µDMA Read Example: 8-Bit Peripheral ... 276
Table 7-6. µDMA Interrupt Assignments ... 277
Table 7-7. Channel Control Structure Offsets for Channel 30 ... 278
Table 7-8. Channel Control Word Configuration for Memory Transfer Example ... 278
Table 7-9. Channel Control Structure Offsets for Channel 7 ... 279

Table 7-10. Channel Control Word Configuration for Peripheral Transmit Example 280
Table 7-11. Primary and Alternate Channel Control Structure Offsets for Channel 8 281
Table 7-12. Channel Control Word Configuration for Peripheral Ping-Pong Receive Example 282
Table 7-13. µDMA Register Map 283
Table 8-1. GPIO Pins With Non-Zero Reset Values 325
Table 8-2. GPIO Pins and Alternate Functions (64LQFP) 325
Table 8-3. GPIO Signals (64LQFP) 326
Table 8-4. GPIO Pad Configuration Examples 331
Table 8-5. GPIO Interrupt Configuration Example 332
Table 8-6. GPIO Register Map 333
Table 9-1. Available CCP Pins 373
Table 9-2. General-Purpose Timers Signals (64LQFP) 374
Table 9-3. 16-Bit Timer With Prescaler Configurations 376
Table 9-4. Timers Register Map 383
Table 10-1. Watchdog Timer Register Map 408
Table 11-1. ADC Signals (64LQFP) 431
Table 11-2. Samples and FIFO Depth of Sequencers 432
Table 11-3. Differential Sampling Pairs 434
Table 11-4. ADC Register Map 438
Table 12-1. UART Signals (64LQFP) 467
Table 12-2. UART Register Map 474
Table 13-1. SSI Signals (64LQFP) 511
Table 13-2. SSI Register Map 522
Table 14-1. Controller Area Network Signals (64LQFP) 550
Table 14-2. CAN Protocol Ranges 563
Table 14-3. CANBIT Register Values 563
Table 14-4. CAN Register Map 567
Table 15-1. PWM Signals (64LQFP) 597
Table 15-2. PWM Register Map 604
Table 16-1. QEI Signals (64LQFP) 644
Table 16-2. QEI Register Map 647
Table 18-1. Signals by Pin Number 662
Table 18-2. Signals by Signal Name 665
Table 18-3. Signals by Function, Except for GPIO 668
Table 18-4. GPIO Pins and Alternate Functions 670
Table 18-5. Connections for Unused Signals (64-pin LQFP) 671
Table 19-1. Temperature Characteristics 672
Table 19-2. Thermal Characteristics 672
Table 19-3. ESD Absolute Maximum Ratings 672
Table 20-1. Maximum Ratings 673
Table 20-2. Recommended DC Operating Conditions 673
Table 20-3. LDO Regulator Characteristics 674
Table 20-4. GPIO Module DC Characteristics 674
Table 20-5. Detailed Power Specifications 675
Table 20-6. Flash Memory Characteristics 675
Table 20-7. Phase Locked Loop (PLL) Characteristics 676
Table 20-8. Actual PLL Frequency 676

Table 20-9. Clock Characteristics 677
Table 20-10. Crystal Characteristics 677
Table 20-11. System Clock Characteristics with ADC Operation 677
Table 20-12. JTAG Characteristics 678
Table 20-13. Reset Characteristics 679
Table 20-14. Sleep Modes AC Characteristics 681
Table 20-15. GPIO Characteristics 681
Table 20-16. ADC Characteristics 681
Table 20-17. ADC Module Internal Reference Characteristics 682
Table 20-18. SSI Characteristics 682

List of Registers

The Cortex-M3 Processor 49
Register 1: Cortex General-Purpose Register 0 (R0) 56
Register 2: Cortex General-Purpose Register 1 (R1) 56
Register 3: Cortex General-Purpose Register 2 (R2) 56
Register 4: Cortex General-Purpose Register 3 (R3) 56
Register 5: Cortex General-Purpose Register 4 (R4) 56
Register 6: Cortex General-Purpose Register 5 (R5) 56
Register 7: Cortex General-Purpose Register 6 (R6) 56
Register 8: Cortex General-Purpose Register 7 (R7) 56
Register 9: Cortex General-Purpose Register 8 (R8) 56
Register 10: Cortex General-Purpose Register 9 (R9) 56
Register 11: Cortex General-Purpose Register 10 (R10) 56
Register 12: Cortex General-Purpose Register 11 (R11) 56
Register 13: Cortex General-Purpose Register 12 (R12) 56
Register 14: Stack Pointer (SP) 57
Register 15: Link Register (LR) 58
Register 16: Program Counter (PC) 59
Register 17: Program Status Register (PSR) 60
Register 18: Priority Mask Register (PRIMASK) 64
Register 19: Fault Mask Register (FAULTMASK) 65
Register 20: Base Priority Mask Register (BASEPRI) 66
Register 21: Control Register (CONTROL) 67

Cortex-M3 Peripherals 91
Register 1: SysTick Control and Status Register (STCTRL), offset 0x010 102
Register 2: SysTick Reload Value Register (STRELOAD), offset 0x014 104
Register 3: SysTick Current Value Register (STCURRENT), offset 0x018 105
Register 4: Interrupt 0-31 Set Enable (EN0), offset 0x100 106
Register 5: Interrupt 32-47 Set Enable (EN1), offset 0x104 107
Register 6: Interrupt 0-31 Clear Enable (DIS0), offset 0x180 108
Register 7: Interrupt 32-47 Clear Enable (DIS1), offset 0x184 109
Register 8: Interrupt 0-31 Set Pending (PEND0), offset 0x200 110
Register 9: Interrupt 32-47 Set Pending (PEND1), offset 0x204 111
Register 10: Interrupt 0-31 Clear Pending (UNPEND0), offset 0x280 112
Register 11: Interrupt 32-47 Clear Pending (UNPEND1), offset 0x284 113
Register 12: Interrupt 0-31 Active Bit (ACTIVE0), offset 0x300 114
Register 13: Interrupt 32-47 Active Bit (ACTIVE1), offset 0x304 115
Register 14: Interrupt 0-3 Priority (PRI0), offset 0x400 116
Register 15: Interrupt 4-7 Priority (PRI1), offset 0x404 116
Register 16: Interrupt 8-11 Priority (PRI2), offset 0x408 116
Register 17: Interrupt 12-15 Priority (PRI3), offset 0x40C 116
Register 18: Interrupt 16-19 Priority (PRI4), offset 0x410 116
Register 19: Interrupt 20-23 Priority (PRI5), offset 0x414 116
Register 20: Interrupt 24-27 Priority (PRI6), offset 0x418 116
Register 21: Interrupt 28-31 Priority (PRI7), offset 0x41C 116
Register 22: Interrupt 32-35 Priority (PRI8), offset 0x420 116

Register 23: Interrupt 36-39 Priority (PRI9), offset 0x424 ... 116
Register 24: Interrupt 40-43 Priority (PRI10), offset 0x428 ... 116
Register 25: Interrupt 44-47 Priority (PRI11), offset 0x42C ... 116
Register 26: Software Trigger Interrupt (SWTRIG), offset 0xF00 ... 118
Register 27: CPU ID Base (CPUID), offset 0xD00 ... 119
Register 28: Interrupt Control and State (INTCTRL), offset 0xD04 ... 120
Register 29: Vector Table Offset (VTABLE), offset 0xD08 ... 123
Register 30: Application Interrupt and Reset Control (APINT), offset 0xD0C ... 124
Register 31: System Control (SYSCTRL), offset 0xD10 ... 126
Register 32: Configuration and Control (CFGCTRL), offset 0xD14 ... 128
Register 33: System Handler Priority 1 (SYSPRI1), offset 0xD18 ... 130
Register 34: System Handler Priority 2 (SYSPRI2), offset 0xD1C ... 131
Register 35: System Handler Priority 3 (SYSPRI3), offset 0xD20 ... 132
Register 36: System Handler Control and State (SYSHNDCTRL), offset 0xD24 ... 133
Register 37: Configurable Fault Status (FAULTSTAT), offset 0xD28 ... 137
Register 38: Hard Fault Status (HFAULTSTAT), offset 0xD2C ... 143
Register 39: Memory Management Fault Address (MMADDR), offset 0xD34 ... 144
Register 40: Bus Fault Address (FAULTADDR), offset 0xD38 ... 145
Register 41: MPU Type (MPUTYPE), offset 0xD90 ... 146
Register 42: MPU Control (MPUCTRL), offset 0xD94 ... 147
Register 43: MPU Region Number (MPUNUMBER), offset 0xD98 ... 149
Register 44: MPU Region Base Address (MPUBASE), offset 0xD9C ... 150
Register 45: MPU Region Base Address Alias 1 (MPUBASE1), offset 0xDA4 ... 150
Register 46: MPU Region Base Address Alias 2 (MPUBASE2), offset 0xDAC ... 150
Register 47: MPU Region Base Address Alias 3 (MPUBASE3), offset 0xDB4 ... 150
Register 48: MPU Region Attribute and Size (MPUATTR), offset 0xDA0 ... 152
Register 49: MPU Region Attribute and Size Alias 1 (MPUATTR1), offset 0xDA8 ... 152
Register 50: MPU Region Attribute and Size Alias 2 (MPUATTR2), offset 0xDB0 ... 152
Register 51: MPU Region Attribute and Size Alias 3 (MPUATTR3), offset 0xDB8 ... 152

System Control ... 167

Register 1: Device Identification 0 (DID0), offset 0x000 ... 181
Register 2: Brown-Out Reset Control (PBORCTL), offset 0x030 ... 183
Register 3: LDO Power Control (LDOPCTL), offset 0x034 ... 184
Register 4: Raw Interrupt Status (RIS), offset 0x050 ... 185
Register 5: Interrupt Mask Control (IMC), offset 0x054 ... 186
Register 6: Masked Interrupt Status and Clear (MISC), offset 0x058 ... 187
Register 7: Reset Cause (RESC), offset 0x05C ... 188
Register 8: Run-Mode Clock Configuration (RCC), offset 0x060 ... 189
Register 9: XTAL to PLL Translation (PLLCFG), offset 0x064 ... 193
Register 10: GPIO High-Performance Bus Control (GPIOHBCTL), offset 0x06C ... 194
Register 11: Run-Mode Clock Configuration 2 (RCC2), offset 0x070 ... 196
Register 12: Main Oscillator Control (MOSCCTL), offset 0x07C ... 198
Register 13: Deep Sleep Clock Configuration (DSLPCLKCFG), offset 0x144 ... 199
Register 14: Device Identification 1 (DID1), offset 0x004 ... 200
Register 15: Device Capabilities 0 (DC0), offset 0x008 ... 202
Register 16: Device Capabilities 1 (DC1), offset 0x010 ... 203
Register 17: Device Capabilities 2 (DC2), offset 0x014 ... 205
Register 18: Device Capabilities 3 (DC3), offset 0x018 ... 206

Register 19: Device Capabilities 4 (DC4), offset 0x01C ... 208
Register 20: Device Capabilities 5 (DC5), offset 0x020 ... 209
Register 21: Device Capabilities 6 (DC6), offset 0x024 ... 210
Register 22: Device Capabilities 7 (DC7), offset 0x028 ... 211
Register 23: Run Mode Clock Gating Control Register 0 (RCGC0), offset 0x100 ... 212
Register 24: Sleep Mode Clock Gating Control Register 0 (SCGC0), offset 0x110 ... 214
Register 25: Deep Sleep Mode Clock Gating Control Register 0 (DCGC0), offset 0x120 ... 216
Register 26: Run Mode Clock Gating Control Register 1 (RCGC1), offset 0x104 ... 218
Register 27: Sleep Mode Clock Gating Control Register 1 (SCGC1), offset 0x114 ... 220
Register 28: Deep Sleep Mode Clock Gating Control Register 1 (DCGC1), offset 0x124 ... 222
Register 29: Run Mode Clock Gating Control Register 2 (RCGC2), offset 0x108 ... 224
Register 30: Sleep Mode Clock Gating Control Register 2 (SCGC2), offset 0x118 ... 226
Register 31: Deep Sleep Mode Clock Gating Control Register 2 (DCGC2), offset 0x128 ... 228
Register 32: Software Reset Control 0 (SRCR0), offset 0x040 ... 230
Register 33: Software Reset Control 1 (SRCR1), offset 0x044 ... 231
Register 34: Software Reset Control 2 (SRCR2), offset 0x048 ... 232

Internal Memory ... 233

Register 1: ROM Control (RMCTL), offset 0x0F0 ... 240
Register 2: Flash Memory Address (FMA), offset 0x000 ... 241
Register 3: Flash Memory Data (FMD), offset 0x004 ... 242
Register 4: Flash Memory Control (FMC), offset 0x008 ... 243
Register 5: Flash Controller Raw Interrupt Status (FCRIS), offset 0x00C ... 245
Register 6: Flash Controller Interrupt Mask (FCIM), offset 0x010 ... 246
Register 7: Flash Controller Masked Interrupt Status and Clear (FCMISC), offset 0x014 ... 247
Register 8: USec Reload (USECRL), offset 0x140 ... 249
Register 9: Flash Memory Protection Read Enable 0 (FMPRE0), offset 0x130 and 0x200 ... 250
Register 10: Flash Memory Protection Program Enable 0 (FMPPE0), offset 0x134 and 0x400 ... 251
Register 11: User Debug (USER_DBG), offset 0x1D0 ... 252
Register 12: User Register 0 (USER_REG0), offset 0x1E0 ... 253
Register 13: User Register 1 (USER_REG1), offset 0x1E4 ... 254
Register 14: User Register 2 (USER_REG2), offset 0x1E8 ... 255
Register 15: User Register 3 (USER_REG3), offset 0x1EC ... 256
Register 16: Flash Memory Protection Read Enable 1 (FMPRE1), offset 0x204 ... 257
Register 17: Flash Memory Protection Read Enable 2 (FMPRE2), offset 0x208 ... 258
Register 18: Flash Memory Protection Read Enable 3 (FMPRE3), offset 0x20C ... 259
Register 19: Flash Memory Protection Program Enable 1 (FMPPE1), offset 0x404 ... 260
Register 20: Flash Memory Protection Program Enable 2 (FMPPE2), offset 0x408 ... 261
Register 21: Flash Memory Protection Program Enable 3 (FMPPE3), offset 0x40C ... 262

Micro Direct Memory Access (µDMA) ... 263

Register 1: DMA Channel Source Address End Pointer (DMASRCENDP), offset 0x000 ... 285
Register 2: DMA Channel Destination Address End Pointer (DMADSTENDP), offset 0x004 ... 286
Register 3: DMA Channel Control Word (DMACHCTL), offset 0x008 ... 287
Register 4: DMA Status (DMASTAT), offset 0x000 ... 291
Register 5: DMA Configuration (DMACFG), offset 0x004 ... 293
Register 6: DMA Channel Control Base Pointer (DMACTLBASE), offset 0x008 ... 294
Register 7: DMA Alternate Channel Control Base Pointer (DMAALTBASE), offset 0x00C ... 295
Register 8: DMA Channel Wait on Request Status (DMAWAITSTAT), offset 0x010 ... 296
Register 9: DMA Channel Software Request (DMASWREQ), offset 0x014 ... 297

Register 10: DMA Channel Useburst Set (DMAUSEBURSTSET), offset 0x018 298
Register 11: DMA Channel Useburst Clear (DMAUSEBURSTCLR), offset 0x01C 300
Register 12: DMA Channel Request Mask Set (DMAREQMASKSET), offset 0x020 301
Register 13: DMA Channel Request Mask Clear (DMAREQMASKCLR), offset 0x024 303
Register 14: DMA Channel Enable Set (DMAENASET), offset 0x028 304
Register 15: DMA Channel Enable Clear (DMAENACLR), offset 0x02C 306
Register 16: DMA Channel Primary Alternate Set (DMAALTSET), offset 0x030 307
Register 17: DMA Channel Primary Alternate Clear (DMAALTCLR), offset 0x034 309
Register 18: DMA Channel Priority Set (DMAPRIOSET), offset 0x038 310
Register 19: DMA Channel Priority Clear (DMAPRIOCLR), offset 0x03C 312
Register 20: DMA Bus Error Clear (DMAERRCLR), offset 0x04C 313
Register 21: DMA Peripheral Identification 0 (DMAPeriphID0), offset 0xFE0 315
Register 22: DMA Peripheral Identification 1 (DMAPeriphID1), offset 0xFE4 316
Register 23: DMA Peripheral Identification 2 (DMAPeriphID2), offset 0xFE8 317
Register 24: DMA Peripheral Identification 3 (DMAPeriphID3), offset 0xFEC 318
Register 25: DMA Peripheral Identification 4 (DMAPeriphID4), offset 0xFD0 319
Register 26: DMA PrimeCell Identification 0 (DMAPCellID0), offset 0xFF0 320
Register 27: DMA PrimeCell Identification 1 (DMAPCellID1), offset 0xFF4 321
Register 28: DMA PrimeCell Identification 2 (DMAPCellID2), offset 0xFF8 322
Register 29: DMA PrimeCell Identification 3 (DMAPCellID3), offset 0xFFC 323

General-Purpose Input/Outputs (GPIOs) 324

Register 1: GPIO Data (GPIODATA), offset 0x000 335
Register 2: GPIO Direction (GPIODIR), offset 0x400 336
Register 3: GPIO Interrupt Sense (GPIOIS), offset 0x404 337
Register 4: GPIO Interrupt Both Edges (GPIOIBE), offset 0x408 338
Register 5: GPIO Interrupt Event (GPIOIEV), offset 0x40C 339
Register 6: GPIO Interrupt Mask (GPIOIM), offset 0x410 340
Register 7: GPIO Raw Interrupt Status (GPIORIS), offset 0x414 341
Register 8: GPIO Masked Interrupt Status (GPIOMIS), offset 0x418 342
Register 9: GPIO Interrupt Clear (GPIOICR), offset 0x41C 343
Register 10: GPIO Alternate Function Select (GPIOAFSEL), offset 0x420 344
Register 11: GPIO 2-mA Drive Select (GPIODR2R), offset 0x500 346
Register 12: GPIO 4-mA Drive Select (GPIODR4R), offset 0x504 347
Register 13: GPIO 8-mA Drive Select (GPIODR8R), offset 0x508 348
Register 14: GPIO Open Drain Select (GPIOODR), offset 0x50C 349
Register 15: GPIO Pull-Up Select (GPIOPUR), offset 0x510 350
Register 16: GPIO Pull-Down Select (GPIOPDR), offset 0x514 352
Register 17: GPIO Slew Rate Control Select (GPIOSLR), offset 0x518 353
Register 18: GPIO Digital Enable (GPIODEN), offset 0x51C 354
Register 19: GPIO Lock (GPIOLOCK), offset 0x520 356
Register 20: GPIO Commit (GPIOCR), offset 0x524 357
Register 21: GPIO Analog Mode Select (GPIOAMSEL), offset 0x528 359
Register 22: GPIO Peripheral Identification 4 (GPIOPeriphID4), offset 0xFD0 360
Register 23: GPIO Peripheral Identification 5 (GPIOPeriphID5), offset 0xFD4 361
Register 24: GPIO Peripheral Identification 6 (GPIOPeriphID6), offset 0xFD8 362
Register 25: GPIO Peripheral Identification 7 (GPIOPeriphID7), offset 0xFDC 363
Register 26: GPIO Peripheral Identification 0 (GPIOPeriphID0), offset 0xFE0 364
Register 27: GPIO Peripheral Identification 1 (GPIOPeriphID1), offset 0xFE4 365

Register 28: GPIO Peripheral Identification 2 (GPIOPeriphID2), offset 0xFE8 366
Register 29: GPIO Peripheral Identification 3 (GPIOPeriphID3), offset 0xFEC 367
Register 30: GPIO PrimeCell Identification 0 (GPIOPCellID0), offset 0xFF0 368
Register 31: GPIO PrimeCell Identification 1 (GPIOPCellID1), offset 0xFF4 369
Register 32: GPIO PrimeCell Identification 2 (GPIOPCellID2), offset 0xFF8 370
Register 33: GPIO PrimeCell Identification 3 (GPIOPCellID3), offset 0xFFC 371

General-Purpose Timers 372
Register 1: GPTM Configuration (GPTMCFG), offset 0x000 384
Register 2: GPTM TimerA Mode (GPTMTAMR), offset 0x004 385
Register 3: GPTM TimerB Mode (GPTMTBMR), offset 0x008 387
Register 4: GPTM Control (GPTMCTL), offset 0x00C 389
Register 5: GPTM Interrupt Mask (GPTMIMR), offset 0x018 392
Register 6: GPTM Raw Interrupt Status (GPTMRIS), offset 0x01C 394
Register 7: GPTM Masked Interrupt Status (GPTMMIS), offset 0x020 395
Register 8: GPTM Interrupt Clear (GPTMICR), offset 0x024 396
Register 9: GPTM TimerA Interval Load (GPTMTAILR), offset 0x028 398
Register 10: GPTM TimerB Interval Load (GPTMTBILR), offset 0x02C 399
Register 11: GPTM TimerA Match (GPTMTAMATCHR), offset 0x030 400
Register 12: GPTM TimerB Match (GPTMTBMATCHR), offset 0x034 401
Register 13: GPTM TimerA Prescale (GPTMTAPR), offset 0x038 402
Register 14: GPTM TimerB Prescale (GPTMTBPR), offset 0x03C 403
Register 15: GPTM TimerA (GPTMTAR), offset 0x048 404
Register 16: GPTM TimerB (GPTMTBR), offset 0x04C 405

Watchdog Timer 406
Register 1: Watchdog Load (WDTLOAD), offset 0x000 410
Register 2: Watchdog Value (WDTVALUE), offset 0x004 411
Register 3: Watchdog Control (WDTCTL), offset 0x008 412
Register 4: Watchdog Interrupt Clear (WDTICR), offset 0x00C 413
Register 5: Watchdog Raw Interrupt Status (WDTRIS), offset 0x010 414
Register 6: Watchdog Masked Interrupt Status (WDTMIS), offset 0x014 415
Register 7: Watchdog Test (WDTTEST), offset 0x418 416
Register 8: Watchdog Lock (WDTLOCK), offset 0xC00 417
Register 9: Watchdog Peripheral Identification 4 (WDTPeriphID4), offset 0xFD0 418
Register 10: Watchdog Peripheral Identification 5 (WDTPeriphID5), offset 0xFD4 419
Register 11: Watchdog Peripheral Identification 6 (WDTPeriphID6), offset 0xFD8 420
Register 12: Watchdog Peripheral Identification 7 (WDTPeriphID7), offset 0xFDC 421
Register 13: Watchdog Peripheral Identification 0 (WDTPeriphID0), offset 0xFE0 422
Register 14: Watchdog Peripheral Identification 1 (WDTPeriphID1), offset 0xFE4 423
Register 15: Watchdog Peripheral Identification 2 (WDTPeriphID2), offset 0xFE8 424
Register 16: Watchdog Peripheral Identification 3 (WDTPeriphID3), offset 0xFEC 425
Register 17: Watchdog PrimeCell Identification 0 (WDTPCellID0), offset 0xFF0 426
Register 18: Watchdog PrimeCell Identification 1 (WDTPCellID1), offset 0xFF4 427
Register 19: Watchdog PrimeCell Identification 2 (WDTPCellID2), offset 0xFF8 428
Register 20: Watchdog PrimeCell Identification 3 (WDTPCellID3), offset 0xFFC 429

Analog-to-Digital Converter (ADC) 430
Register 1: ADC Active Sample Sequencer (ADCACTSS), offset 0x000 440
Register 2: ADC Raw Interrupt Status (ADCRIS), offset 0x004 441
Register 3: ADC Interrupt Mask (ADCIM), offset 0x008 442

Register 4: ADC Interrupt Status and Clear (ADCISC), offset 0x00C 443
Register 5: ADC Overflow Status (ADCOSTAT), offset 0x010 444
Register 6: ADC Event Multiplexer Select (ADCEMUX), offset 0x014 445
Register 7: ADC Underflow Status (ADCUSTAT), offset 0x018 449
Register 8: ADC Sample Sequencer Priority (ADCSSPRI), offset 0x020 450
Register 9: ADC Processor Sample Sequence Initiate (ADCPSSI), offset 0x028 452
Register 10: ADC Sample Averaging Control (ADCSAC), offset 0x030 453
Register 11: ADC Sample Sequence Input Multiplexer Select 0 (ADCSSMUX0), offset 0x040 454
Register 12: ADC Sample Sequence Control 0 (ADCSSCTL0), offset 0x044 456
Register 13: ADC Sample Sequence Result FIFO 0 (ADCSSFIFO0), offset 0x048 459
Register 14: ADC Sample Sequence Result FIFO 1 (ADCSSFIFO1), offset 0x068 459
Register 15: ADC Sample Sequence Result FIFO 2 (ADCSSFIFO2), offset 0x088 459
Register 16: ADC Sample Sequence Result FIFO 3 (ADCSSFIFO3), offset 0x0A8 459
Register 17: ADC Sample Sequence FIFO 0 Status (ADCSSFSTAT0), offset 0x04C 460
Register 18: ADC Sample Sequence FIFO 1 Status (ADCSSFSTAT1), offset 0x06C 460
Register 19: ADC Sample Sequence FIFO 2 Status (ADCSSFSTAT2), offset 0x08C 460
Register 20: ADC Sample Sequence FIFO 3 Status (ADCSSFSTAT3), offset 0x0AC 460
Register 21: ADC Sample Sequence Input Multiplexer Select 1 (ADCSSMUX1), offset 0x060 461
Register 22: ADC Sample Sequence Input Multiplexer Select 2 (ADCSSMUX2), offset 0x080 461
Register 23: ADC Sample Sequence Control 1 (ADCSSCTL1), offset 0x064 462
Register 24: ADC Sample Sequence Control 2 (ADCSSCTL2), offset 0x084 462
Register 25: ADC Sample Sequence Input Multiplexer Select 3 (ADCSSMUX3), offset 0x0A0 464
Register 26: ADC Sample Sequence Control 3 (ADCSSCTL3), offset 0x0A4 465

Universal Asynchronous Receivers/Transmitters (UARTs) 466

Register 1: UART Data (UARTDR), offset 0x000 475
Register 2: UART Receive Status/Error Clear (UARTRSR/UARTECR), offset 0x004 477
Register 3: UART Flag (UARTFR), offset 0x018 479
Register 4: UART IrDA Low-Power Register (UARTILPR), offset 0x020 481
Register 5: UART Integer Baud-Rate Divisor (UARTIBRD), offset 0x024 482
Register 6: UART Fractional Baud-Rate Divisor (UARTFBRD), offset 0x028 483
Register 7: UART Line Control (UARTLCRH), offset 0x02C 484
Register 8: UART Control (UARTCTL), offset 0x030 486
Register 9: UART Interrupt FIFO Level Select (UARTIFLS), offset 0x034 488
Register 10: UART Interrupt Mask (UARTIM), offset 0x038 490
Register 11: UART Raw Interrupt Status (UARTRIS), offset 0x03C 492
Register 12: UART Masked Interrupt Status (UARTMIS), offset 0x040 493
Register 13: UART Interrupt Clear (UARTICR), offset 0x044 494
Register 14: UART DMA Control (UARTDMACTL), offset 0x048 496
Register 15: UART Peripheral Identification 4 (UARTPeriphID4), offset 0xFD0 497
Register 16: UART Peripheral Identification 5 (UARTPeriphID5), offset 0xFD4 498
Register 17: UART Peripheral Identification 6 (UARTPeriphID6), offset 0xFD8 499
Register 18: UART Peripheral Identification 7 (UARTPeriphID7), offset 0xFDC 500
Register 19: UART Peripheral Identification 0 (UARTPeriphID0), offset 0xFE0 501
Register 20: UART Peripheral Identification 1 (UARTPeriphID1), offset 0xFE4 502
Register 21: UART Peripheral Identification 2 (UARTPeriphID2), offset 0xFE8 503
Register 22: UART Peripheral Identification 3 (UARTPeriphID3), offset 0xFEC 504
Register 23: UART PrimeCell Identification 0 (UARTPCellID0), offset 0xFF0 505
Register 24: UART PrimeCell Identification 1 (UARTPCellID1), offset 0xFF4 506

Register 25: UART PrimeCell Identification 2 (UARTPCellID2), offset 0xFF8 507
Register 26: UART PrimeCell Identification 3 (UARTPCellID3), offset 0xFFC 508

Synchronous Serial Interface (SSI) 509
Register 1: SSI Control 0 (SSICR0), offset 0x000 523
Register 2: SSI Control 1 (SSICR1), offset 0x004 525
Register 3: SSI Data (SSIDR), offset 0x008 527
Register 4: SSI Status (SSISR), offset 0x00C 528
Register 5: SSI Clock Prescale (SSICPSR), offset 0x010 530
Register 6: SSI Interrupt Mask (SSIIM), offset 0x014 531
Register 7: SSI Raw Interrupt Status (SSIRIS), offset 0x018 533
Register 8: SSI Masked Interrupt Status (SSIMIS), offset 0x01C 534
Register 9: SSI Interrupt Clear (SSIICR), offset 0x020 535
Register 10: SSI DMA Control (SSIDMACTL), offset 0x024 536
Register 11: SSI Peripheral Identification 4 (SSIPeriphID4), offset 0xFD0 537
Register 12: SSI Peripheral Identification 5 (SSIPeriphID5), offset 0xFD4 538
Register 13: SSI Peripheral Identification 6 (SSIPeriphID6), offset 0xFD8 539
Register 14: SSI Peripheral Identification 7 (SSIPeriphID7), offset 0xFDC 540
Register 15: SSI Peripheral Identification 0 (SSIPeriphID0), offset 0xFE0 541
Register 16: SSI Peripheral Identification 1 (SSIPeriphID1), offset 0xFE4 542
Register 17: SSI Peripheral Identification 2 (SSIPeriphID2), offset 0xFE8 543
Register 18: SSI Peripheral Identification 3 (SSIPeriphID3), offset 0xFEC 544
Register 19: SSI PrimeCell Identification 0 (SSIPCellID0), offset 0xFF0 545
Register 20: SSI PrimeCell Identification 1 (SSIPCellID1), offset 0xFF4 546
Register 21: SSI PrimeCell Identification 2 (SSIPCellID2), offset 0xFF8 547
Register 22: SSI PrimeCell Identification 3 (SSIPCellID3), offset 0xFFC 548

Controller Area Network (CAN) Module 549
Register 1: CAN Control (CANCTL), offset 0x000 570
Register 2: CAN Status (CANSTS), offset 0x004 572
Register 3: CAN Error Counter (CANERR), offset 0x008 574
Register 4: CAN Bit Timing (CANBIT), offset 0x00C 575
Register 5: CAN Interrupt (CANINT), offset 0x010 576
Register 6: CAN Test (CANTST), offset 0x014 577
Register 7: CAN Baud Rate Prescaler Extension (CANBRPE), offset 0x018 579
Register 8: CAN IF1 Command Request (CANIF1CRQ), offset 0x020 580
Register 9: CAN IF2 Command Request (CANIF2CRQ), offset 0x080 580
Register 10: CAN IF1 Command Mask (CANIF1CMSK), offset 0x024 581
Register 11: CAN IF2 Command Mask (CANIF2CMSK), offset 0x084 581
Register 12: CAN IF1 Mask 1 (CANIF1MSK1), offset 0x028 583
Register 13: CAN IF2 Mask 1 (CANIF2MSK1), offset 0x088 583
Register 14: CAN IF1 Mask 2 (CANIF1MSK2), offset 0x02C 584
Register 15: CAN IF2 Mask 2 (CANIF2MSK2), offset 0x08C 584
Register 16: CAN IF1 Arbitration 1 (CANIF1ARB1), offset 0x030 585
Register 17: CAN IF2 Arbitration 1 (CANIF2ARB1), offset 0x090 585
Register 18: CAN IF1 Arbitration 2 (CANIF1ARB2), offset 0x034 586
Register 19: CAN IF2 Arbitration 2 (CANIF2ARB2), offset 0x094 586
Register 20: CAN IF1 Message Control (CANIF1MCTL), offset 0x038 588
Register 21: CAN IF2 Message Control (CANIF2MCTL), offset 0x098 588
Register 22: CAN IF1 Data A1 (CANIF1DA1), offset 0x03C 590

Register 23: CAN IF1 Data A2 (CANIF1DA2), offset 0x040 590
Register 24: CAN IF1 Data B1 (CANIF1DB1), offset 0x044 590
Register 25: CAN IF1 Data B2 (CANIF1DB2), offset 0x048 590
Register 26: CAN IF2 Data A1 (CANIF2DA1), offset 0x09C 590
Register 27: CAN IF2 Data A2 (CANIF2DA2), offset 0x0A0 590
Register 28: CAN IF2 Data B1 (CANIF2DB1), offset 0x0A4 590
Register 29: CAN IF2 Data B2 (CANIF2DB2), offset 0x0A8 590
Register 30: CAN Transmission Request 1 (CANTXRQ1), offset 0x100 591
Register 31: CAN Transmission Request 2 (CANTXRQ2), offset 0x104 591
Register 32: CAN New Data 1 (CANNWDA1), offset 0x120 592
Register 33: CAN New Data 2 (CANNWDA2), offset 0x124 592
Register 34: CAN Message 1 Interrupt Pending (CANMSG1INT), offset 0x140 593
Register 35: CAN Message 2 Interrupt Pending (CANMSG2INT), offset 0x144 593
Register 36: CAN Message 1 Valid (CANMSG1VAL), offset 0x160 594
Register 37: CAN Message 2 Valid (CANMSG2VAL), offset 0x164 594

Pulse Width Modulator (PWM) 595

Register 1: PWM Master Control (PWMCTL), offset 0x000 606
Register 2: PWM Time Base Sync (PWMSYNC), offset 0x004 607
Register 3: PWM Output Enable (PWMENABLE), offset 0x008 608
Register 4: PWM Output Inversion (PWMINVERT), offset 0x00C 609
Register 5: PWM Output Fault (PWMFAULT), offset 0x010 610
Register 6: PWM Interrupt Enable (PWMINTEN), offset 0x014 611
Register 7: PWM Raw Interrupt Status (PWMRIS), offset 0x018 612
Register 8: PWM Interrupt Status and Clear (PWMISC), offset 0x01C 613
Register 9: PWM Status (PWMSTATUS), offset 0x020 614
Register 10: PWM Fault Condition Value (PWMFAULTVAL), offset 0x024 615
Register 11: PWM0 Control (PWM0CTL), offset 0x040 616
Register 12: PWM1 Control (PWM1CTL), offset 0x080 616
Register 13: PWM0 Interrupt and Trigger Enable (PWM0INTEN), offset 0x044 621
Register 14: PWM1 Interrupt and Trigger Enable (PWM1INTEN), offset 0x084 621
Register 15: PWM0 Raw Interrupt Status (PWM0RIS), offset 0x048 624
Register 16: PWM1 Raw Interrupt Status (PWM1RIS), offset 0x088 624
Register 17: PWM0 Interrupt Status and Clear (PWM0ISC), offset 0x04C 625
Register 18: PWM1 Interrupt Status and Clear (PWM1ISC), offset 0x08C 625
Register 19: PWM0 Load (PWM0LOAD), offset 0x050 626
Register 20: PWM1 Load (PWM1LOAD), offset 0x090 626
Register 21: PWM0 Counter (PWM0COUNT), offset 0x054 627
Register 22: PWM1 Counter (PWM1COUNT), offset 0x094 627
Register 23: PWM0 Compare A (PWM0CMPA), offset 0x058 628
Register 24: PWM1 Compare A (PWM1CMPA), offset 0x098 628
Register 25: PWM0 Compare B (PWM0CMPB), offset 0x05C 629
Register 26: PWM1 Compare B (PWM1CMPB), offset 0x09C 629
Register 27: PWM0 Generator A Control (PWM0GENA), offset 0x060 630
Register 28: PWM1 Generator A Control (PWM1GENA), offset 0x0A0 630
Register 29: PWM0 Generator B Control (PWM0GENB), offset 0x064 633
Register 30: PWM1 Generator B Control (PWM1GENB), offset 0x0A4 633
Register 31: PWM0 Dead-Band Control (PWM0DBCTL), offset 0x068 636
Register 32: PWM1 Dead-Band Control (PWM1DBCTL), offset 0x0A8 636

Register 33: PWM0 Dead-Band Rising-Edge Delay (PWM0DBRISE), offset 0x06C 637
Register 34: PWM1 Dead-Band Rising-Edge Delay (PWM1DBRISE), offset 0x0AC 637
Register 35: PWM0 Dead-Band Falling-Edge-Delay (PWM0DBFALL), offset 0x070 638
Register 36: PWM1 Dead-Band Falling-Edge-Delay (PWM1DBFALL), offset 0x0B0 638
Register 37: PWM0 Fault Source 0 (PWM0FLTSRC0), offset 0x074 639
Register 38: PWM1 Fault Source 0 (PWM1FLTSRC0), offset 0x0B4 639
Register 39: PWM0 Minimum Fault Period (PWM0MINFLTPER), offset 0x07C 640
Register 40: PWM1 Minimum Fault Period (PWM1MINFLTPER), offset 0x0BC 640
Register 41: PWM0 Fault Pin Logic Sense (PWM0FLTSEN), offset 0x800 641
Register 42: PWM1 Fault Pin Logic Sense (PWM1FLTSEN), offset 0x880 641
Register 43: PWM0 Fault Status 0 (PWM0FLTSTAT0), offset 0x804 642
Register 44: PWM1 Fault Status 0 (PWM1FLTSTAT0), offset 0x884 642

Quadrature Encoder Interface (QEI) 643

Register 1: QEI Control (QEICTL), offset 0x000 649
Register 2: QEI Status (QEISTAT), offset 0x004 651
Register 3: QEI Position (QEIPOS), offset 0x008 652
Register 4: QEI Maximum Position (QEIMAXPOS), offset 0x00C 653
Register 5: QEI Timer Load (QEILOAD), offset 0x010 654
Register 6: QEI Timer (QEITIME), offset 0x014 655
Register 7: QEI Velocity Counter (QEICOUNT), offset 0x018 656
Register 8: QEI Velocity (QEISPEED), offset 0x01C 657
Register 9: QEI Interrupt Enable (QEIINTEN), offset 0x020 658
Register 10: QEI Raw Interrupt Status (QEIRIS), offset 0x024 659
Register 11: QEI Interrupt Status and Clear (QEIISC), offset 0x028 660

Revision History

The revision history table notes changes made between the indicated revisions of the LM3S2678 data sheet.

Table 1. Revision History

Date	Revision	Description
July 2014	.	■ In JTAG chapter, clarified procedure for recovering a locked device as well as sections on JTAG-to-SWD Switching and SWD-to-JTAG Switching. ■ In System Control chapter, clarified behavior of **Reset Cause (RESC)** register external reset bit. ■ In Internal Memory chapter: – Added sections on Execute-Only Protection, Read-Only Protection, and Permanently Disabling Debug. – Noted that the **Boot Configuration (BOOTCFG)** register requires a POR before committed changes to the Flash-resident registers take effect. ■ In UART chapter: – Clarified that the transmit interrupt is based on a transition through level. – Corrected reset for **UART Raw Interrupt Status (UARTRIS)** register. ■ In Electrical Characteristics chapter, updated Crystal Characteristics table. ■ In Ordering and Contact Information appendix, moved orderable part numbers table to addendum. ■ Additional minor data sheet clarifications and corrections.
November 2011	11107	■ Added module-specific pin tables to each chapter in the new Signal Description sections. ■ In Internal Memory chapter, corrected note in **USER_DBG** and **USER_REG0/1/2/3** registers, that once committed, the value of the register can never be restored to the factory default value. ■ In Timer chapter, clarified that in 16-Bit Input Edge Time Mode, the timer is capable of capturing three types of events: rising edge, falling edge, or both. ■ In UART chapter, clarified interrupt behavior. ■ In SSI chapter, corrected SSIClk in the figure "Synchronous Serial Frame Format (Single Transfer)". ■ In Signal Tables chapter: – Corrected pin numbers in table "Connections for Unused Signals" (other pin tables were correct). – Corrected buffer type for PWMn signals in pin tables. ■ In Electrical Characteristics chapter: – Corrected values in "Detailed Power Specifications" table. – Corrected Nom values for parameters "TCK clock Low time" and "TCK clock High time" in "JTAG Characteristics" table. – Corrected missing values for "Conversion time" and "Conversion rate" parameters in "ADC Characteristics" table. ■ Additional minor data sheet clarifications and corrections.

Table 1. Revision History *(continued)*

Date	Revision	Description
January 2011	9102	■ In **Application Interrupt and Reset Control (APINT)** register, changed bit name from SYSRESETREQ to SYSRESREQ. ■ Added DEBUG (Debug Priority) bit field to **System Handler Priority 3 (SYSPRI3)** register. ■ Added "Reset Sources" table to System Control chapter. ■ Removed mention of false-start bit detection in the UART chapter. This feature is not supported. ■ Added note that specific module clocks must be enabled before that module's registers can be programmed. There must be a delay of 3 system clocks after the module clock is enabled before any of that module's registers are accessed. ■ Corrected nonlinearity and offset error parameters (E_L, E_D and E_O) in ADC Characteristics table. ■ Added specification for maximum input voltage on a non-power pin when the microcontroller is unpowered (V_{NON} parameter in Maximum Ratings table). ■ Additional minor data sheet clarifications and corrections.
September 2010	7783	■ Reorganized ARM Cortex-M3 Processor Core, Memory Map and Interrupts chapters, creating two new chapters, The Cortex-M3 Processor and Cortex-M3 Peripherals. Much additional content was added, including all the Cortex-M3 registers. ■ Changed register names to be consistent with StellarisWare® names: the Cortex-M3 **Interrupt Control and Status (ICSR)** register to the **Interrupt Control and State (INTCTRL)** register, and the Cortex-M3 **Interrupt Set Enable (SETNA)** register to the **Interrupt 0-31 Set Enable (EN0)** register. ■ In the Internal Memory chapter: – Added clarification of instruction execution during Flash operations. – Deleted **ROM Version (RMVER)** register as it is not used. ■ In the GPIO chapter: – Renamed the **GPIO High-Speed Control (GPIOHSCTL)** register to the **GPIO High-Performance Bus Control (GPIOHBCTL)** register. – Added clarification about the operation of the Advanced High-Performance Bus (AHB) and the legacy Advanced Peripheral Bus (APB). – Modified Figure 8-1 on page 327 and Figure 8-2 on page 328 to clarify operation of the GPIO inputs when used as an alternate function. ■ In General-Purpose Timers chapter, clarified operation of the 32-bit RTC mode. ■ In Electrical Characteristics chapter: – Added "Input voltage for a GPIO configured as an analog input" value to Table 20-1 on page 673. – Added I_{LKG} parameter (GPIO input leakage current) to Table 20-4 on page 674. – Corrected values for t_{CLKRF} parameter (SSIClk rise/fall time) in Table 20-18 on page 682. ■ Added dimensions for Tray and Tape and Reel shipping mediums.
June 2010	7403	■ Corrected base address for SRAM in architectural overview chapter. ■ Clarified system clock operation, adding content to “Clock Control” on page 172. ■ Clarified CAN bit timing examples. ■ In Signal Tables chapter, added table "Connections for Unused Signals." ■ In "Reset Characteristics" table, corrected value for supply voltage (VDD) rise time. ■ Additional minor data sheet clarifications and corrections.

Table 1. Revision History *(continued)*

Date	Revision	Description
April 2010	7021	■ Added note about $\overline{RST}$ signal routing. ■ Clarified the function of the `TnSTALL` bit in the **GPTMCTL** register. ■ Additional minor data sheet clarifications and corrections.
January 2010	6707	■ In "System Control" section, clarified Debug Access Port operation after Sleep modes. ■ Clarified wording on Flash memory access errors. ■ Added section on Flash interrupts. ■ Changed the reset value of the **ADC Sample Sequence Result FIFO n (ADCSSFIFOn)** registers to be indeterminate. ■ Clarified operation of SSI transmit FIFO. ■ Made these changes to the Operating Characteristics chapter: – Added storage temperature ratings to "Temperature Characteristics" table – Added "ESD Absolute Maximum Ratings" table ■ Made these changes to the Electrical Characteristics chapter: – In "Flash Memory Characteristics" table, corrected Mass erase time – Added sleep and deep-sleep wake-up times ("Sleep Modes AC Characteristics" table) – In "Reset Characteristics" table, corrected units for supply voltage (VDD) rise time
October 2009	6449	■ Removed the `MAXADCSPD` bit field from the **DCGC0** register as it has no function in deep-sleep mode. ■ Deleted reset value for 16-bit mode from **GPTMTAILR**, **GPTMTAMATCHR**, and **GPTMTAR** registers because the module resets in 32-bit mode. ■ Clarified CAN bit timing and corrected examples. ■ Clarified PWM source for ADC triggering ■ Made these changes to the Electrical Characteristics chapter: – Removed V_{SIH} and V_{SIL} parameters from Operating Conditions table. – Changed SSI set up and hold times to be expressed in system clocks, not ns. – Revised ADC electrical specifications to clarify, including reorganizing and adding new data. – Changed the name of the $t_{HIB_REG_WRITE}$ parameter to $t_{HIB_REG_ACCESS}$. – Table added showing actual PLL frequency depending on input crystal. ■ Additional minor data sheet clarifications and corrections.

Table 1. Revision History *(continued)*

Date	Revision	Description
July 2009	5920	■ Clarified Power-on reset and $\overline{\text{RST}}$ pin operation; added new diagrams. ■ Clarified explanation of nonvolatile register programming in Internal Memory chapter. ■ Added explanation of reset value to **FMPRE0/1/2/3**, **FMPPE0/1/2/3**, **USER_DBG**, and **USER_REG0/1** registers. ■ Changed buffer type for $\overline{\text{WAKE}}$ pin to TTL. ■ In ADC characteristics table, changed Max value for GAIN parameter from ±1 to ±3 and added E_{IR}(Internal voltage reference error) parameter. ■ Changed ordering numbers. ■ Additional minor data sheet clarifications and corrections.
April 2009	5368	■ Added JTAG/SWD clarification (see “Communication with JTAG/SWD” on page 161). ■ Added clarification that the PLL operates at 400 MHz, but is divided by two prior to the application of the output divisor. ■ Corrected bits 2:1 in **I2CSIMR**, **I2CSRIS**, **I2CSMIS**, and **I2CSICR** registers to be reserved bits (cannot interrupt on start and stop conditions). ■ Corrected bits 15:11 in **USBTXMAXP0/1/2** and **USBRXMAXP0/1/2** registers to be reserved bits (cannot define multiplier). ■ Additional minor data sheet clarifications and corrections.
January 2009	4724	■ Corrected bit type for RELOAD bit field in SysTick Reload Value register; changed to R/W. ■ Added clarification as to what happens when the SSI in slave mode is required to transmit but there is no data in the TX FIFO. ■ Added comparator operating mode tables. ■ Corrected pin types of signals $\overline{\text{RST}}$ to "in" and USB0RBIAS to "out". ■ Additional minor data sheet clarifications and corrections.
November 2008	4283	■ Revised High-Level Block Diagram. ■ Additional minor data sheet clarifications and corrections were made.

Table 1. Revision History *(continued)*

Date	Revision	Description
October 2008	4149	■ Added note on clearing interrupts to the Interrupts chapter: **Note:** It may take several processor cycles after a write to clear an interrupt source in order for NVIC to see the interrupt source de-assert. This means if the interrupt clear is done as the last action in an interrupt handler, it is possible for the interrupt handler to complete while NVIC sees the interrupt as still asserted, causing the interrupt handler to be re-entered errantly. This can be avoided by either clearing the interrupt source at the beginning of the interrupt handler or by performing a read or write after the write to clear the interrupt source (and flush the write buffer) ■ Added clarification on JTAG reset to the JTAG chapter: In order to reset the JTAG module after the device has been powered on, the `TMS` input must be held HIGH for five TCK clock cycles, resetting the TAP controller and all associated JTAG chains. ■ The binary value was incorrect in the JTAG 16-bit switch sequence in the JTAG-to-SWD Switching section in the JTAG chapter. Sentence changed to: The 16-bit switch sequence for switching to JTAG mode is defined as b1110011100111100, transmitted LSB first. ■ The `FMA` value for the **FMPRE3** register was incorrect in the Flash Resident Registers table in the Internal Memory chapter. The correct value is 0x0000.0006. ■ Step 1 of the Initialization and Configuration procedure in the ADC chapter states the wrong register to use to enable the ADC clock. Sentence changed to: 1. Enable the ADC clock by writing a value of 0x0001.0000 to the **RCGC0** register. ■ In the CAN chapter, major improvements were made including a rewrite of the conceptual information and the addition of new figures to clarify how to use the Controller Area Network (CAN) module. ■ Additional minor data sheet clarifications and corrections were made.
June 2008	2972	Started tracking revision history.

About This Document

This data sheet provides reference information for the LM3S2678 microcontroller, describing the functional blocks of the system-on-chip (SoC) device designed around the ARM® Cortex™-M3 core.

Audience

This manual is intended for system software developers, hardware designers, and application developers.

About This Manual

This document is organized into sections that correspond to each major feature.

Related Documents

The following related documents are available on the Stellaris® web site at www.ti.com/stellaris:

- *Stellaris® Errata*
- *ARM® Cortex™-M3 Errata*
- *Cortex™-M3/M4 Instruction Set Technical User's Manual*
- *Stellaris® Boot Loader User's Guide*
- *Stellaris® Graphics Library User's Guide*
- *Stellaris® Peripheral Driver Library User's Guide*
- *Stellaris® ROM User's Guide*

The following related documents are also referenced:

- *ARM® Debug Interface V5 Architecture Specification*
- *ARM® Embedded Trace Macrocell Architecture Specification*
- *IEEE Standard 1149.1-Test Access Port and Boundary-Scan Architecture*

This documentation list was current as of publication date. Please check the web site for additional documentation, including application notes and white papers.

Documentation Conventions

This document uses the conventions shown in Table 2 on page 30.

Table 2. Documentation Conventions

Notation	Meaning
General Register Notation	
REGISTER	APB registers are indicated in uppercase bold. For example, **PBORCTL** is the Power-On and Brown-Out Reset Control register. If a register name contains a lowercase n, it represents more than one register. For example, **SRCRn** represents any (or all) of the three Software Reset Control registers: **SRCR0, SRCR1** , and **SRCR2**.
bit	A single bit in a register.
bit field	Two or more consecutive and related bits.
offset 0x*nnn*	A hexadecimal increment to a register's address, relative to that module's base address as specified in Table 2-4 on page 68.
Register *N*	Registers are numbered consecutively throughout the document to aid in referencing them. The register number has no meaning to software.
reserved	Register bits marked *reserved* are reserved for future use. In most cases, reserved bits are set to 0; however, user software should not rely on the value of a reserved bit. To provide software compatibility with future products, the value of a reserved bit should be preserved across a read-modify-write operation.
yy:xx	The range of register bits inclusive from xx to yy. For example, 31:15 means bits 15 through 31 in that register.
Register Bit/Field Types	This value in the register bit diagram indicates whether software running on the controller can change the value of the bit field.
RC	Software can read this field. The bit or field is cleared by hardware after reading the bit/field.
RO	Software can read this field. Always write the chip reset value.
R/W	Software can read or write this field.
R/WC	Software can read or write this field. Writing to it with any value clears the register.
R/W1C	Software can read or write this field. A write of a 0 to a W1C bit does not affect the bit value in the register. A write of a 1 clears the value of the bit in the register; the remaining bits remain unchanged. This register type is primarily used for clearing interrupt status bits where the read operation provides the interrupt status and the write of the read value clears only the interrupts being reported at the time the register was read.
R/W1S	Software can read or write a 1 to this field. A write of a 0 to a R/W1S bit does not affect the bit value in the register.
W1C	Software can write this field. A write of a 0 to a W1C bit does not affect the bit value in the register. A write of a 1 clears the value of the bit in the register; the remaining bits remain unchanged. A read of the register returns no meaningful data. This register is typically used to clear the corresponding bit in an interrupt register.
WO	Only a write by software is valid; a read of the register returns no meaningful data.
Register Bit/Field Reset Value	This value in the register bit diagram shows the bit/field value after any reset, unless noted.
0	Bit cleared to 0 on chip reset.
1	Bit set to 1 on chip reset.
-	Nondeterministic.
Pin/Signal Notation	
[ ]	Pin alternate function; a pin defaults to the signal without the brackets.
pin	Refers to the physical connection on the package.
signal	Refers to the electrical signal encoding of a pin.

Table 2. Documentation Conventions *(continued)*

Notation	Meaning
assert a signal	Change the value of the signal from the logically False state to the logically True state. For active High signals, the asserted signal value is 1 (High); for active Low signals, the asserted signal value is 0 (Low). The active polarity (High or Low) is defined by the signal name (see SIGNAL and $\overline{\text{SIGNAL}}$ below).
deassert a signal	Change the value of the signal from the logically True state to the logically False state.
$\overline{\text{SIGNAL}}$	Signal names are in uppercase and in the Courier font. An overbar on a signal name indicates that it is active Low. To assert $\overline{\text{SIGNAL}}$ is to drive it Low; to deassert $\overline{\text{SIGNAL}}$ is to drive it High.
SIGNAL	Signal names are in uppercase and in the Courier font. An active High signal has no overbar. To assert SIGNAL is to drive it High; to deassert SIGNAL is to drive it Low.
Numbers	
X	An uppercase X indicates any of several values is allowed, where X can be any legal pattern. For example, a binary value of 0X00 can be either 0100 or 0000, a hex value of 0xX is 0x0 or 0x1, and so on.
0x	Hexadecimal numbers have a prefix of 0x. For example, 0x00FF is the hexadecimal number FF. All other numbers within register tables are assumed to be binary. Within conceptual information, binary numbers are indicated with a b suffix, for example, 1011b, and decimal numbers are written without a prefix or suffix.

1 Architectural Overview

The Stellaris® family of microcontrollers—the first ARM® Cortex™-M3 based controllers—brings high-performance 32-bit computing to cost-sensitive embedded microcontroller applications. These pioneering parts deliver customers 32-bit performance at a cost equivalent to legacy 8- and 16-bit devices, all in a package with a small footprint.

The Stellaris family offers efficient performance and extensive integration, favorably positioning the device into cost-conscious applications requiring significant control-processing and connectivity capabilities. The Stellaris LM3S2000 series, designed for Controller Area Network (CAN) applications, extends the Stellaris family with Bosch CAN networking technology, the golden standard in short-haul industrial networks. The Stellaris LM3S2000 series also marks the first integration of CAN capabilities with the revolutionary Cortex-M3 core.

The LM3S2678 microcontroller is targeted for industrial applications, including remote monitoring, electronic point-of-sale machines, test and measurement equipment, network appliances and switches, factory automation, HVAC and building control, gaming equipment, motion control, medical instrumentation, and fire and security.

In addition, the LM3S2678 microcontroller offers the advantages of ARM's widely available development tools, System-on-Chip (SoC) infrastructure IP applications, and a large user community. Additionally, the microcontroller uses ARM's Thumb®-compatible Thumb-2 instruction set to reduce memory requirements and, thereby, cost. Finally, the LM3S2678 microcontroller is code-compatible to all members of the extensive Stellaris family; providing flexibility to fit our customers' precise needs.

Texas Instruments offers a complete solution to get to market quickly, with evaluation and development boards, white papers and application notes, an easy-to-use peripheral driver library, and a strong support, sales, and distributor network. See “Ordering and Contact Information” on page 727 for ordering information for Stellaris family devices.

1.1 Product Features

The LM3S2678 microcontroller includes the following product features:

- 32-Bit RISC Performance
  - 32-bit ARM® Cortex™-M3 v7M architecture optimized for small-footprint embedded applications
  - System timer (SysTick), providing a simple, 24-bit clear-on-write, decrementing, wrap-on-zero counter with a flexible control mechanism
  - Thumb®-compatible Thumb-2-only instruction set processor core for high code density
  - 50-MHz operation
  - Hardware-division and single-cycle-multiplication
  - Integrated Nested Vectored Interrupt Controller (NVIC) providing deterministic interrupt handling
  - 29 interrupts with eight priority levels

- Memory protection unit (MPU), providing a privileged mode for protected operating system functionality
- Unaligned data access, enabling data to be efficiently packed into memory
- Atomic bit manipulation (bit-banding), delivering maximum memory utilization and streamlined peripheral control

■ ARM® Cortex™-M3 Processor Core

- Compact core.
- Thumb-2 instruction set, delivering the high-performance expected of an ARM core in the memory size usually associated with 8- and 16-bit devices; typically in the range of a few kilobytes of memory for microcontroller class applications.
- Rapid application execution through Harvard architecture characterized by separate buses for instruction and data.
- Exceptional interrupt handling, by implementing the register manipulations required for handling an interrupt in hardware.
- Deterministic, fast interrupt processing: always 12 cycles, or just 6 cycles with tail-chaining
- External non-maskable interrupt signal (NMI) available for immediate execution of NMI handler for safety critical applications.
- Memory protection unit (MPU) to provide a privileged mode of operation for complex applications.
- Migration from the ARM7™ processor family for better performance and power efficiency.
- Full-featured debug solution
  - Serial Wire JTAG Debug Port (SWJ-DP)
  - Flash Patch and Breakpoint (FPB) unit for implementing breakpoints
  - Data Watchpoint and Trigger (DWT) unit for implementing watchpoints, trigger resources, and system profiling
  - Instrumentation Trace Macrocell (ITM) for support of printf style debugging
  - Trace Port Interface Unit (TPIU) for bridging to a Trace Port Analyzer
- Optimized for single-cycle flash usage
- Three sleep modes with clock gating for low power
- Single-cycle multiply instruction and hardware divide
- Atomic operations
- ARM Thumb2 mixed 16-/32-bit instruction set
- 1.25 DMIPS/MHz

- JTAG
  - IEEE 1149.1-1990 compatible Test Access Port (TAP) controller
  - Four-bit Instruction Register (IR) chain for storing JTAG instructions
  - IEEE standard instructions: BYPASS, IDCODE, SAMPLE/PRELOAD, EXTEST and INTEST
  - ARM additional instructions: APACC, DPACC and ABORT
  - Integrated ARM Serial Wire Debug (SWD)
- Internal Memory
  - 128 KB single-cycle flash
    - User-managed flash block protection on a 2-KB block basis
    - User-managed flash data programming
    - User-defined and managed flash-protection block
  - 32 KB single-cycle SRAM
  - Pre-programmed ROM
    - Stellaris family peripheral driver library (DriverLib)
    - Stellaris boot loader
- DMA Controller
  - ARM PrimeCell® 32-channel configurable µDMA controller
  - Support for multiple transfer modes
    - Basic, for simple transfer scenarios
    - Ping-pong, for continuous data flow to/from peripherals
    - Scatter-gather, from a programmable list of up to 256 arbitrary transfers initiated from a single request
  - Dedicated channels for supported peripherals
  - One channel each for receive and transmit path for bidirectional peripherals
  - Dedicated channel for software-initiated transfers
  - Independently configured and operated channels
  - Per-channel configurable bus arbitration scheme
  - Two levels of priority
  - Design optimizations for improved bus access performance between µDMA controller and the processor core

    - µDMA controller access is subordinate to core access
    - RAM striping
    - Peripheral bus segmentation
  - Data sizes of 8, 16, and 32 bits
  - Source and destination address increment size of byte, half-word, word, or no increment
  - Maskable device requests
  - Optional software initiated requests for any channel
  - Interrupt on transfer completion, with a separate interrupt per channel
- GPIOs
  - 1-33 GPIOs, depending on configuration
  - 5-V-tolerant in input configuration
  - Two means of port access: either Advanced High-Performance Bus (AHB) with better back-to-back access performance, or the legacy Advanced Peripheral Bus (APB) for backwards-compatibility with existing code
  - Fast toggle capable of a change every clock cycle for ports on AHB, every two clock cycles for ports on APB
  - Programmable control for GPIO interrupts
    - Interrupt generation masking
    - Edge-triggered on rising, falling, or both
    - Level-sensitive on High or Low values
  - Bit masking in both read and write operations through address lines
  - Can initiate an ADC sample sequence
  - Pins configured as digital inputs are Schmitt-triggered.
  - Programmable control for GPIO pad configuration
    - Weak pull-up or pull-down resistors
    - 2-mA, 4-mA, and 8-mA pad drive for digital communication; up to four pads can be configured with an 18-mA pad drive for high-current applications
    - Slew rate control for the 8-mA drive
    - Open drain enables
    - Digital input enables
- General-Purpose Timers

- Four General-Purpose Timer Modules (GPTM), each of which provides two 16-bit timers/counters. Each GPTM can be configured to operate independently:
  - As a single 32-bit timer
  - As one 32-bit Real-Time Clock (RTC) to event capture
  - For Pulse Width Modulation (PWM)
  - To trigger analog-to-digital conversions
- 32-bit Timer modes
  - Programmable one-shot timer
  - Programmable periodic timer
  - Real-Time Clock when using an external 32.768-KHz clock as the input
  - User-enabled stalling when the controller asserts CPU Halt flag during debug
  - ADC event trigger
- 16-bit Timer modes
  - General-purpose timer function with an 8-bit prescaler (for one-shot and periodic modes only)
  - Programmable one-shot timer
  - Programmable periodic timer
  - User-enabled stalling when the controller asserts CPU Halt flag during debug
  - ADC event trigger
- 16-bit Input Capture modes
  - Input edge count capture
  - Input edge time capture
- 16-bit PWM mode
  - Simple PWM mode with software-programmable output inversion of the PWM signal

■ ARM FiRM-compliant Watchdog Timer

- 32-bit down counter with a programmable load register
- Separate watchdog clock with an enable
- Programmable interrupt generation logic with interrupt masking
- Lock register protection from runaway software
- Reset generation logic with an enable/disable

  - User-enabled stalling when the controller asserts the CPU Halt flag during debug
- ADC
  - Eight analog input channels
  - Single-ended and differential-input configurations
  - On-chip internal temperature sensor
  - Sample rate of 500 thousand samples/second
  - Flexible, configurable analog-to-digital conversion
  - Four programmable sample conversion sequences from one to eight entries long, with corresponding conversion result FIFOs
  - Flexible trigger control
    - Controller (software)
    - Timers
    - PWM
    - GPIO
  - Hardware averaging of up to 64 samples for improved accuracy
  - Converter uses an internal 3-V reference
  - Power and ground for the analog circuitry is separate from the digital power and ground
- UART
  - Fully programmable 16C550-type UART with IrDA support
  - Separate 16x8 transmit (TX) and receive (RX) FIFOs to reduce CPU interrupt service loading
  - Programmable baud-rate generator allowing speeds up to 3.125 Mbps
  - Programmable FIFO length, including 1-byte deep operation providing conventional double-buffered interface
  - FIFO trigger levels of 1/8, 1/4, 1/2, 3/4, and 7/8
  - Standard asynchronous communication bits for start, stop, and parity
  - Line-break generation and detection
  - Fully programmable serial interface characteristics
    - 5, 6, 7, or 8 data bits
    - Even, odd, stick, or no-parity bit generation/detection
    - 1 or 2 stop bit generation

  - IrDA serial-IR (SIR) encoder/decoder providing
    - Programmable use of IrDA Serial Infrared (SIR) or UART input/output
    - Support of IrDA SIR encoder/decoder functions for data rates up to 115.2 Kbps half-duplex
    - Support of normal 3/16 and low-power (1.41-2.23 µs) bit durations
    - Programmable internal clock generator enabling division of reference clock by 1 to 256 for low-power mode bit duration
  - Dedicated Direct Memory Access (DMA) transmit and receive channels
- Synchronous Serial Interface (SSI)
  - Master or slave operation
  - Support for Direct Memory Access (DMA)
  - Programmable clock bit rate and prescale
  - Separate transmit and receive FIFOs, 16 bits wide, 8 locations deep
  - Programmable interface operation for Freescale SPI, MICROWIRE, or Texas Instruments synchronous serial interfaces
  - Programmable data frame size from 4 to 16 bits
  - Internal loopback test mode for diagnostic/debug testing
- Controller Area Network (CAN)
  - CAN protocol version 2.0 part A/B
  - Bit rates up to 1 Mbps
  - 32 message objects with individual identifier masks
  - Maskable interrupt
  - Disable Automatic Retransmission mode for Time-Triggered CAN (TTCAN) applications
  - Programmable Loopback mode for self-test operation
  - Programmable FIFO mode enables storage of multiple message objects
  - Gluelessly attaches to an external CAN interface through the `CANnTX` and `CANnRX` signals
- PWM
  - Two PWM generator blocks, each with one 16-bit counter, two PWM comparators, a PWM signal generator, a dead-band generator, and an interrupt/ADC-trigger selector
  - Two fault inputs in hardware to promote low-latency shutdown
  - One 16-bit counter

    - Runs in Down or Up/Down mode
    - Output frequency controlled by a 16-bit load value
    - Load value updates can be synchronized
    - Produces output signals at zero and load value
  - Two PWM comparators
    - Comparator value updates can be synchronized
    - Produces output signals on match
  - PWM generator
    - Output PWM signal is constructed based on actions taken as a result of the counter and PWM comparator output signals
    - Produces two independent PWM signals
  - Dead-band generator
    - Produces two PWM signals with programmable dead-band delays suitable for driving a half-H bridge
    - Can be bypassed, leaving input PWM signals unmodified
  - Flexible output control block with PWM output enable of each PWM signal
    - PWM output enable of each PWM signal
    - Optional output inversion of each PWM signal (polarity control)
    - Optional fault handling for each PWM signal
    - Synchronization of timers in the PWM generator blocks
    - Extended PWM synchronization of timer/comparator updates across the PWM generator blocks
    - Interrupt status summary of the PWM generator blocks
    - Extended PWM fault handling, with multiple fault signals, programmable polarities, and filtering
  - Can initiate an ADC sample sequence
- QEI
  - Position integrator that tracks the encoder position
  - Velocity capture using built-in timer
  - The input frequency of the QEI inputs may be as high as 1/4 of the processor frequency (for example, 12.5 MHz for a 50-MHz system)

  - Interrupt generation on:
    - Index pulse
    - Velocity-timer expiration
    - Direction change
    - Quadrature error detection
- Power
  - On-chip Low Drop-Out (LDO) voltage regulator, with programmable output user-adjustable from 2.25 V to 2.75 V
  - Low-power options on controller: Sleep and Deep-sleep modes
  - Low-power options for peripherals: software controls shutdown of individual peripherals
  - 3.3-V supply brown-out detection and reporting via interrupt or reset
- Flexible Reset Sources
  - Power-on reset (POR)
  - Reset pin assertion
  - Brown-out (BOR) detector alerts to system power drops
  - Software reset
  - Watchdog timer reset
  - Internal low drop-out (LDO) regulator output goes unregulated
- Industrial-range 64-pin RoHS-compliant LQFP package

1.2 Target Applications

- Remote monitoring
- Electronic point-of-sale (POS) machines
- Test and measurement equipment
- Network appliances and switches
- Factory automation
- HVAC and building control
- Gaming equipment
- Motion control
- Medical instrumentation

- Fire and security
- Power and energy
- Transportation

1.3 High-Level Block Diagram

Figure 1-1 on page 42 depicts the features on the Stellaris LM3S2678 microcontroller.

Figure 1-1. Stellaris LM3S2678 Microcontroller High-Level Block Diagram

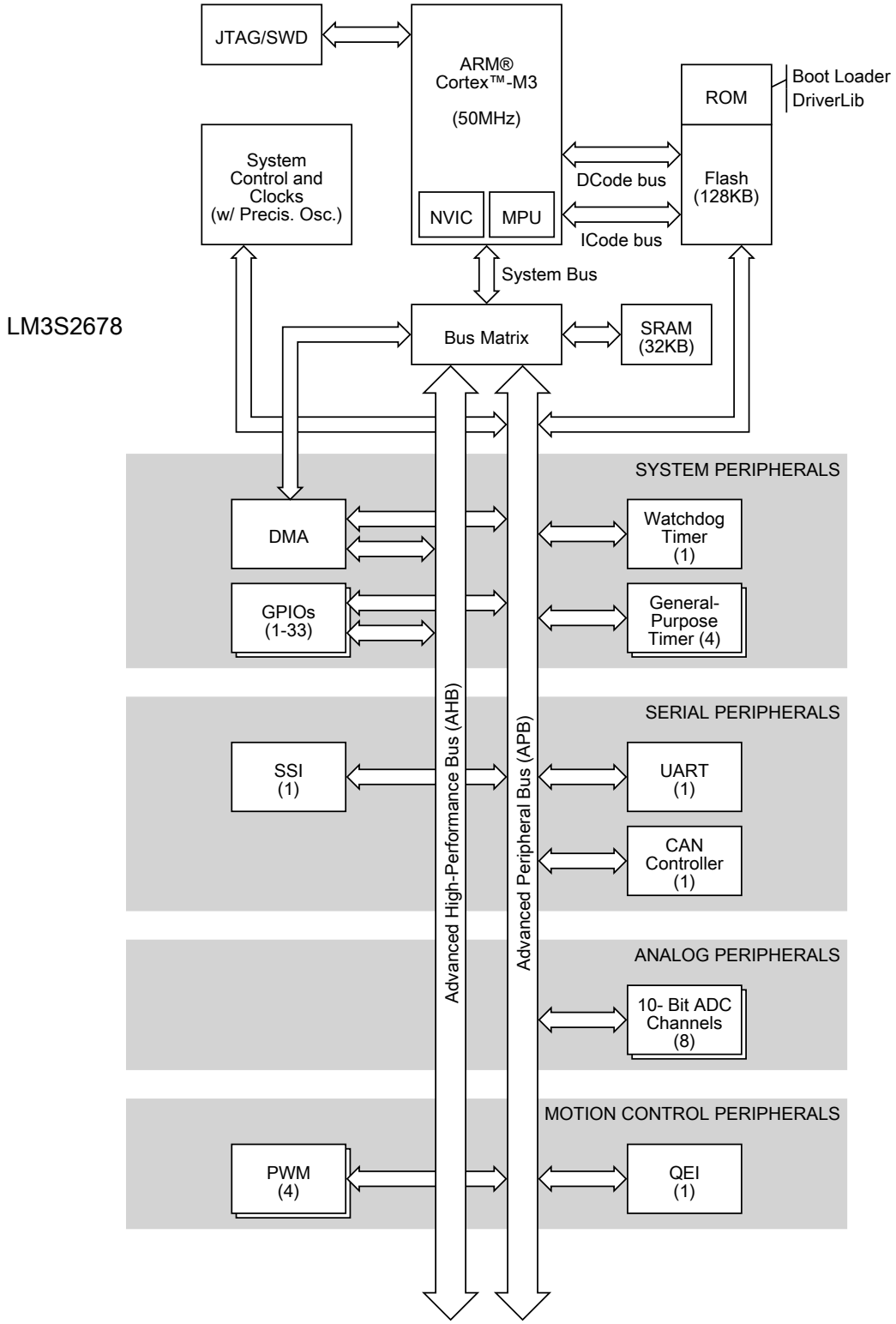

1.4 Functional Overview

The following sections provide an overview of the features of the LM3S2678 microcontroller. The page number in parenthesis indicates where that feature is discussed in detail. Ordering and support information can be found in “Ordering and Contact Information” on page 727.

1.4.1 ARM Cortex™-M3

1.4.1.1 Processor Core (see page 49)

All members of the Stellaris product family, including the LM3S2678 microcontroller, are designed around an ARM Cortex™-M3 processor core. The ARM Cortex-M3 processor provides the core for a high-performance, low-cost platform that meets the needs of minimal memory implementation, reduced pin count, and low-power consumption, while delivering outstanding computational performance and exceptional system response to interrupts.

1.4.1.2 Memory Map (see page 68)

A memory map lists the location of instructions and data in memory. The memory map for the LM3S2678 controller can be found in Table 2-4 on page 68. Register addresses are given as a hexadecimal increment, relative to the module's base address as shown in the memory map.

1.4.1.3 System Timer (SysTick) (see page 91)

Cortex-M3 includes an integrated system timer, SysTick. SysTick provides a simple, 24-bit clear-on-write, decrementing, wrap-on-zero counter with a flexible control mechanism. The counter can be used in several different ways, for example:

- An RTOS tick timer which fires at a programmable rate (for example, 100 Hz) and invokes a SysTick routine.
- A high-speed alarm timer using the system clock.
- A variable rate alarm or signal timer—the duration is range-dependent on the reference clock used and the dynamic range of the counter.
- A simple counter. Software can use this to measure time to completion and time used.
- An internal clock source control based on missing/meeting durations. The COUNTFLAG bit-field in the control and status register can be used to determine if an action completed within a set duration, as part of a dynamic clock management control loop.

1.4.1.4 Nested Vectored Interrupt Controller (NVIC) (see page 92)

The LM3S2678 controller includes the ARM Nested Vectored Interrupt Controller (NVIC) on the ARM® Cortex™-M3 core. The NVIC and Cortex-M3 prioritize and handle all exceptions. All exceptions are handled in Handler Mode. The processor state is automatically stored to the stack on an exception, and automatically restored from the stack at the end of the Interrupt Service Routine (ISR). The vector is fetched in parallel to the state saving, which enables efficient interrupt entry. The processor supports tail-chaining, which enables back-to-back interrupts to be performed without the overhead of state saving and restoration. Software can set eight priority levels on 7 exceptions (system handlers) and 29 interrupts.

1.4.1.5 System Control Block (SCB) (see page 94)

The SCB provides system implementation information and system control, including configuration, control, and reporting of system exceptions.

1.4.1.6 Memory Protection Unit (MPU) (see page 94)

The MPU supports the standard ARMv7 Protected Memory System Architecture (PMSA) model. The MPU provides full support for protection regions, overlapping protection regions, access permissions, and exporting memory attributes to the system.

1.4.1.7 Direct Memory Access (see page 263)

The LM3S2678 microcontroller includes a Direct Memory Access (DMA) controller, known as micro-DMA (µDMA). The µDMA controller provides a way to offload data transfer tasks from the Cortex-M3 processor, allowing for more efficient use of the processor and the expanded available bus bandwidth. The µDMA controller can perform transfers between memory and peripherals. It has dedicated channels for each supported peripheral and can be programmed to automatically perform transfers between peripherals and memory as the peripheral is ready to transfer more data. The µDMA controller also supports sophisticated transfer modes such as ping-pong and scatter-gather, which allows the processor to set up a list of transfer tasks for the controller.

1.4.2 Motor Control Peripherals

To enhance motor control, the LM3S2678 controller features Pulse Width Modulation (PWM) outputs and the Quadrature Encoder Interface (QEI).

1.4.2.1 PWM

Pulse width modulation (PWM) is a powerful technique for digitally encoding analog signal levels. High-resolution counters are used to generate a square wave, and the duty cycle of the square wave is modulated to encode an analog signal. Typical applications include switching power supplies and motor control.

On the LM3S2678, PWM motion control functionality can be achieved through:

- Dedicated, flexible motion control hardware using the PWM pins
- The motion control features of the general-purpose timers using the CCP pins

PWM Pins ***(see page 595)***

The LM3S2678 PWM module consists of two PWM generator blocks and a control block. Each PWM generator block contains one timer (16-bit down or up/down counter), two comparators, a PWM signal generator, a dead-band generator, and an interrupt/ADC-trigger selector. The control block determines the polarity of the PWM signals, and which signals are passed through to the pins.

Each PWM generator block produces two PWM signals that can either be independent signals or a single pair of complementary signals with dead-band delays inserted. The output of the PWM generation blocks are managed by the output control block before being passed to the device pins.

CCP Pins ***(see page 378)***

The General-Purpose Timer Module's CCP (Capture Compare PWM) pins are software programmable to support a simple PWM mode with a software-programmable output inversion of the PWM signal.

Fault Pins (see page 601)

The LM3S2678 PWM module includes two fault-condition handling inputs to quickly provide low-latency shutdown and prevent damage to the motor being controlled.

1.4.2.2 QEI (see page 643)

A quadrature encoder, also known as a 2-channel incremental encoder, converts linear displacement into a pulse signal. By monitoring both the number of pulses and the relative phase of the two signals, you can track the position, direction of rotation, and speed. In addition, a third channel, or index signal, can be used to reset the position counter.

The Stellaris quadrature encoder with index (QEI) module interprets the code produced by a quadrature encoder wheel to integrate position over time and determine direction of rotation. In addition, it can capture a running estimate of the velocity of the encoder wheel.

1.4.3 Analog Peripherals

To handle analog signals, the LM3S2678 microcontroller offers an Analog-to-Digital Converter (ADC).

1.4.3.1 ADC (see page 430)

An analog-to-digital converter (ADC) is a peripheral that converts a continuous analog voltage to a discrete digital number.

The LM3S2678 ADC module features 10-bit conversion resolution and supports eight input channels, plus an internal temperature sensor. Four buffered sample sequences allow rapid sampling of up to eight analog input sources without controller intervention. Each sample sequence provides flexible programming with fully configurable input source, trigger events, interrupt generation, and sequence priority.

1.4.4 Serial Communications Peripherals

The LM3S2678 controller supports both asynchronous and synchronous serial communications with:

- One fully programmable 16C550-type UART
- One SSI module
- One CAN unit

1.4.4.1 UART (see page 466)

A Universal Asynchronous Receiver/Transmitter (UART) is an integrated circuit used for RS-232C serial communications, containing a transmitter (parallel-to-serial converter) and a receiver (serial-to-parallel converter), each clocked separately.

The LM3S2678 controller includes one fully programmable 16C550-type UARTthat supports data transfer speeds up to 3.125 Mbps. (Although similar in functionality to a 16C550 UART, it is not register-compatible.) In addition, each UART is capable of supporting IrDA.

Separate 16x8 transmit (TX) and receive (RX) FIFOs reduce CPU interrupt service loading. The UART can generate individually masked interrupts from the RX, TX, modem status, and error conditions. The module provides a single combined interrupt when any of the interrupts are asserted and are unmasked.

1.4.4.2 SSI (see page 509)

Synchronous Serial Interface (SSI) is a four-wire bi-directional full and low-speed communications interface.

The LM3S2678 controller includes one SSI module that provides the functionality for synchronous serial communications with peripheral devices, and can be configured to use the Freescale SPI, MICROWIRE, or TI synchronous serial interface frame formats. The size of the data frame is also configurable, and can be set between 4 and 16 bits, inclusive.

The SSI module performs serial-to-parallel conversion on data received from a peripheral device, and parallel-to-serial conversion on data transmitted to a peripheral device. The TX and RX paths are buffered with internal FIFOs, allowing up to eight 16-bit values to be stored independently.

The SSI module can be configured as either a master or slave device. As a slave device, the SSI module can also be configured to disable its output, which allows a master device to be coupled with multiple slave devices.

The SSI module also includes a programmable bit rate clock divider and prescaler to generate the output serial clock derived from the SSI module's input clock. Bit rates are generated based on the input clock and the maximum bit rate is determined by the connected peripheral.

1.4.4.3 Controller Area Network (see page 549)

Controller Area Network (CAN) is a multicast shared serial-bus standard for connecting electronic control units (ECUs). CAN was specifically designed to be robust in electromagnetically noisy environments and can utilize a differential balanced line like RS-485 or a more robust twisted-pair wire. Originally created for automotive purposes, now it is used in many embedded control applications (for example, industrial or medical). Bit rates up to 1Mb/s are possible at network lengths below 40 meters. Decreased bit rates allow longer network distances (for example, 125 Kb/s at 500m).

A transmitter sends a message to all CAN nodes (broadcasting). Each node decides on the basis of the identifier received whether it should process the message. The identifier also determines the priority that the message enjoys in competition for bus access. Each CAN message can transmit from 0 to 8 bytes of user information. The LM3S2678 includes one CAN unit.

1.4.5 System Peripherals

1.4.5.1 Programmable GPIOs (see page 324)

General-purpose input/output (GPIO) pins offer flexibility for a variety of connections.

The Stellaris GPIO module is comprised of five physical GPIO blocks, each corresponding to an individual GPIO port. The GPIO module is FiRM-compliant (compliant to the ARM Foundation IP for Real-Time Microcontrollers specification) and supports 1-33 programmable input/output pins. The number of GPIOs available depends on the peripherals being used (see “Signal Tables” on page 662 for the signals available to each GPIO pin).

The GPIO module features programmable interrupt generation as either edge-triggered or level-sensitive on all pins, programmable control for GPIO pad configuration, and bit masking in both read and write operations through address lines. Pins configured as digital inputs are Schmitt-triggered.

1.4.5.2 Four Programmable Timers (see page 372)

Programmable timers can be used to count or time external events that drive the Timer input pins.

The Stellaris General-Purpose Timer Module (GPTM) contains four GPTM blocks. Each GPTM block provides two 16-bit timers/counters that can be configured to operate independently as timers or event counters, or configured to operate as one 32-bit timer or one 32-bit Real-Time Clock (RTC). Timers can also be used to trigger analog-to-digital (ADC) conversions.

When configured in 32-bit mode, a timer can run as a Real-Time Clock (RTC), one-shot timer or periodic timer. When in 16-bit mode, a timer can run as a one-shot timer or periodic timer, and can extend its precision by using an 8-bit prescaler. A 16-bit timer can also be configured for event capture or Pulse Width Modulation (PWM) generation.

1.4.5.3 Watchdog Timer (see page 406)

A watchdog timer can generate an interrupt or a reset when a time-out value is reached. The watchdog timer is used to regain control when a system has failed due to a software error or to the failure of an external device to respond in the expected way.

The Stellaris Watchdog Timer module consists of a 32-bit down counter, a programmable load register, interrupt generation logic, and a locking register.

The Watchdog Timer can be configured to generate an interrupt to the controller on its first time-out, and to generate a reset signal on its second time-out. Once the Watchdog Timer has been configured, the lock register can be written to prevent the timer configuration from being inadvertently altered.

1.4.6 Memory Peripherals

The LM3S2678 controller offers both single-cycle SRAM and single-cycle Flash memory.

1.4.6.1 SRAM (see page 233)

The LM3S2678 static random access memory (SRAM) controller supports 32 KB SRAM. The internal SRAM of the Stellaris devices starts at base address 0x2000.0000 of the device memory map. To reduce the number of time-consuming read-modify-write (RMW) operations, ARM has introduced *bit-banding* technology in the new Cortex-M3 processor. With a bit-band-enabled processor, certain regions in the memory map (SRAM and peripheral space) can use address aliases to access individual bits in a single, atomic operation.

1.4.6.2 Flash (see page 234)

The LM3S2678 Flash controller supports 128 KB of flash memory. The flash is organized as a set of 1-KB blocks that can be individually erased. Erasing a block causes the entire contents of the block to be reset to all 1s. These blocks are paired into a set of 2-KB blocks that can be individually protected. The blocks can be marked as read-only or execute-only, providing different levels of code protection. Read-only blocks cannot be erased or programmed, protecting the contents of those blocks from being modified. Execute-only blocks cannot be erased or programmed, and can only be read by the controller instruction fetch mechanism, protecting the contents of those blocks from being read by either the controller or by a debugger.

1.4.6.3 ROM (see page 690)

The LM3S2678 microcontroller ships with the Stellaris family Peripheral Driver Library conveniently preprogrammed in read-only memory (ROM). The Stellaris Peripheral Driver Library is a royalty-free software library for controlling on-chip peripherals, and includes a boot-loader capability. The library performs both peripheral initialization and peripheral control functions, with a choice of polled or interrupt-driven peripheral support, and takes full advantage of the stellar interrupt performance of the ARM® Cortex™-M3 core. No special pragmas or custom assembly code prologue/epilogue functions are required. For applications that require in-field programmability, the royalty-free Stellaris

boot loader included in the Stellaris Peripheral Driver Library can act as an application loader and support in-field firmware updates.

1.4.7 Additional Features

1.4.7.1 JTAG TAP Controller (see page 155)

The Joint Test Action Group (JTAG) port is an IEEE standard that defines a Test Access Port and Boundary Scan Architecture for digital integrated circuits and provides a standardized serial interface for controlling the associated test logic. The TAP, Instruction Register (IR), and Data Registers (DR) can be used to test the interconnections of assembled printed circuit boards and obtain manufacturing information on the components. The JTAG Port also provides a means of accessing and controlling design-for-test features such as I/O pin observation and control, scan testing, and debugging.

The JTAG port is composed of the standard four pins: `TCK`, `TMS`, `TDI`, and `TDO`. Data is transmitted serially into the controller on `TDI` and out of the controller on `TDO`. The interpretation of this data is dependent on the current state of the TAP controller. For detailed information on the operation of the JTAG port and TAP controller, please refer to the *IEEE Standard 1149.1-Test Access Port and Boundary-Scan Architecture*.

The Stellaris JTAG controller works with the ARM JTAG controller built into the Cortex-M3 core. This is implemented by multiplexing the `TDO` outputs from both JTAG controllers. ARM JTAG instructions select the ARM `TDO` output while Stellaris JTAG instructions select the Stellaris `TDO` outputs. The multiplexer is controlled by the Stellaris JTAG controller, which has comprehensive programming for the ARM, Stellaris, and unimplemented JTAG instructions.

1.4.7.2 System Control and Clocks (see page 167)

System control determines the overall operation of the device. It provides information about the device, controls the clocking of the device and individual peripherals, and handles reset detection and reporting.

1.4.8 Hardware Details

Details on the pins and package can be found in the following sections:

- “Pin Diagram” on page 661
- “Signal Tables” on page 662
- “Operating Characteristics” on page 672
- “Electrical Characteristics” on page 673
- “Package Information” on page 729

2 The Cortex-M3 Processor

The ARM® Cortex™-M3 processor provides a high-performance, low-cost platform that meets the system requirements of minimal memory implementation, reduced pin count, and low power consumption, while delivering outstanding computational performance and exceptional system response to interrupts. Features include:

- Compact core.
- Thumb-2 instruction set, delivering the high-performance expected of an ARM core in the memory size usually associated with 8- and 16-bit devices; typically in the range of a few kilobytes of memory for microcontroller class applications.
- Rapid application execution through Harvard architecture characterized by separate buses for instruction and data.
- Exceptional interrupt handling, by implementing the register manipulations required for handling an interrupt in hardware.
- Deterministic, fast interrupt processing: always 12 cycles, or just 6 cycles with tail-chaining
- External non-maskable interrupt signal (NMI) available for immediate execution of NMI handler for safety critical applications.
- Memory protection unit (MPU) to provide a privileged mode of operation for complex applications.
- Migration from the ARM7™ processor family for better performance and power efficiency.
- Full-featured debug solution
  - Serial Wire JTAG Debug Port (SWJ-DP)
  - Flash Patch and Breakpoint (FPB) unit for implementing breakpoints
  - Data Watchpoint and Trigger (DWT) unit for implementing watchpoints, trigger resources, and system profiling
  - Instrumentation Trace Macrocell (ITM) for support of printf style debugging
  - Trace Port Interface Unit (TPIU) for bridging to a Trace Port Analyzer
- Optimized for single-cycle flash usage
- Three sleep modes with clock gating for low power
- Single-cycle multiply instruction and hardware divide
- Atomic operations
- ARM Thumb2 mixed 16-/32-bit instruction set
- 1.25 DMIPS/MHz

The Stellaris® family of microcontrollers builds on this core to bring high-performance 32-bit computing to cost-sensitive embedded microcontroller applications, such as factory automation and control, industrial control power devices, building and home automation, and stepper motor control.

This chapter provides information on the Stellaris implementation of the Cortex-M3 processor, including the programming model, the memory model, the exception model, fault handling, and power management.

For technical details on the instruction set, see the *Cortex™-M3/M4 Instruction Set Technical User's Manual*.

2.1 Block Diagram

The Cortex-M3 processor is built on a high-performance processor core, with a 3-stage pipeline Harvard architecture, making it ideal for demanding embedded applications. The processor delivers exceptional power efficiency through an efficient instruction set and extensively optimized design, providing high-end processing hardware including a range of single-cycle and SIMD multiplication and multiply-with-accumulate capabilities, saturating arithmetic and dedicated hardware division.

To facilitate the design of cost-sensitive devices, the Cortex-M3 processor implements tightly coupled system components that reduce processor area while significantly improving interrupt handling and system debug capabilities. The Cortex-M3 processor implements a version of the Thumb® instruction set based on Thumb-2 technology, ensuring high code density and reduced program memory requirements. The Cortex-M3 instruction set provides the exceptional performance expected of a modern 32-bit architecture, with the high code density of 8-bit and 16-bit microcontrollers.

The Cortex-M3 processor closely integrates a nested interrupt controller (NVIC), to deliver industry-leading interrupt performance. The Stellaris NVIC includes a non-maskable interrupt (NMI) and provides eight interrupt priority levels. The tight integration of the processor core and NVIC provides fast execution of interrupt service routines (ISRs), dramatically reducing interrupt latency. The hardware stacking of registers and the ability to suspend load-multiple and store-multiple operations further reduce interrupt latency. Interrupt handlers do not require any assembler stubs which removes code overhead from the ISRs. Tail-chaining optimization also significantly reduces the overhead when switching from one ISR to another. To optimize low-power designs, the NVIC integrates with the sleep modes, including Deep-sleep mode, which enables the entire device to be rapidly powered down.

Figure 2-1. CPU Block Diagram

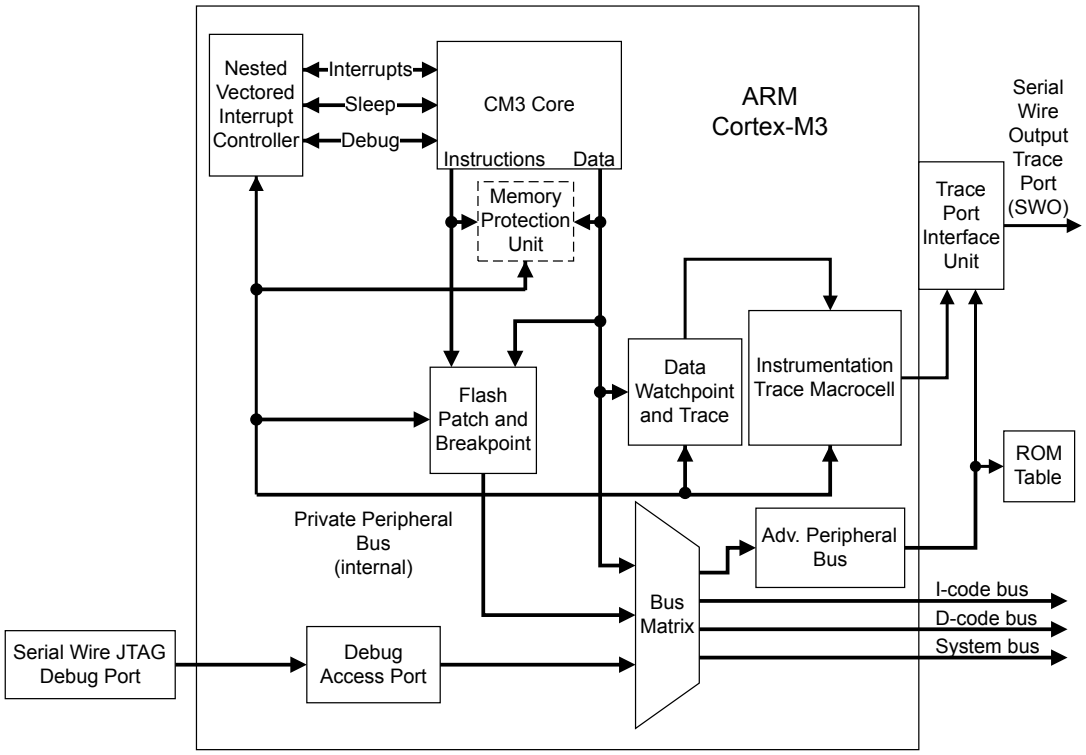

2.2 Overview

2.2.1 System-Level Interface

The Cortex-M3 processor provides multiple interfaces using AMBA® technology to provide high-speed, low-latency memory accesses. The core supports unaligned data accesses and implements atomic bit manipulation that enables faster peripheral controls, system spinlocks, and thread-safe Boolean data handling.

The Cortex-M3 processor has a memory protection unit (MPU) that provides fine-grain memory control, enabling applications to implement security privilege levels and separate code, data and stack on a task-by-task basis.

2.2.2 Integrated Configurable Debug

The Cortex-M3 processor implements a complete hardware debug solution, providing high system visibility of the processor and memory through either a traditional JTAG port or a 2-pin Serial Wire Debug (SWD) port that is ideal for microcontrollers and other small package devices. The Stellaris implementation replaces the ARM SW-DP and JTAG-DP with the ARM CoreSight™-compliant Serial Wire JTAG Debug Port (SWJ-DP) interface. The SWJ-DP interface combines the SWD and JTAG debug ports into one module. See the *ARM® Debug Interface V5 Architecture Specification* for details on SWJ-DP.

For system trace, the processor integrates an Instrumentation Trace Macrocell (ITM) alongside data watchpoints and a profiling unit. To enable simple and cost-effective profiling of the system trace events, a Serial Wire Viewer (SWV) can export a stream of software-generated messages, data trace, and profiling information through a single pin.

The Flash Patch and Breakpoint Unit (FPB) provides up to eight hardware breakpoint comparators that debuggers can use. The comparators in the FPB also provide remap functions of up to eight words in the program code in the CODE memory region. This enables applications stored in a read-only area of Flash memory to be patched in another area of on-chip SRAM or Flash memory. If a patch is required, the application programs the FPB to remap a number of addresses. When those addresses are accessed, the accesses are redirected to a remap table specified in the FPB configuration.

For more information on the Cortex-M3 debug capabilities, see the*ARM® Debug Interface V5 Architecture Specification*.

2.2.3 Trace Port Interface Unit (TPIU)

The TPIU acts as a bridge between the Cortex-M3 trace data from the ITM, and an off-chip Trace Port Analyzer, as shown in Figure 2-2 on page 52.

Figure 2-2. TPIU Block Diagram

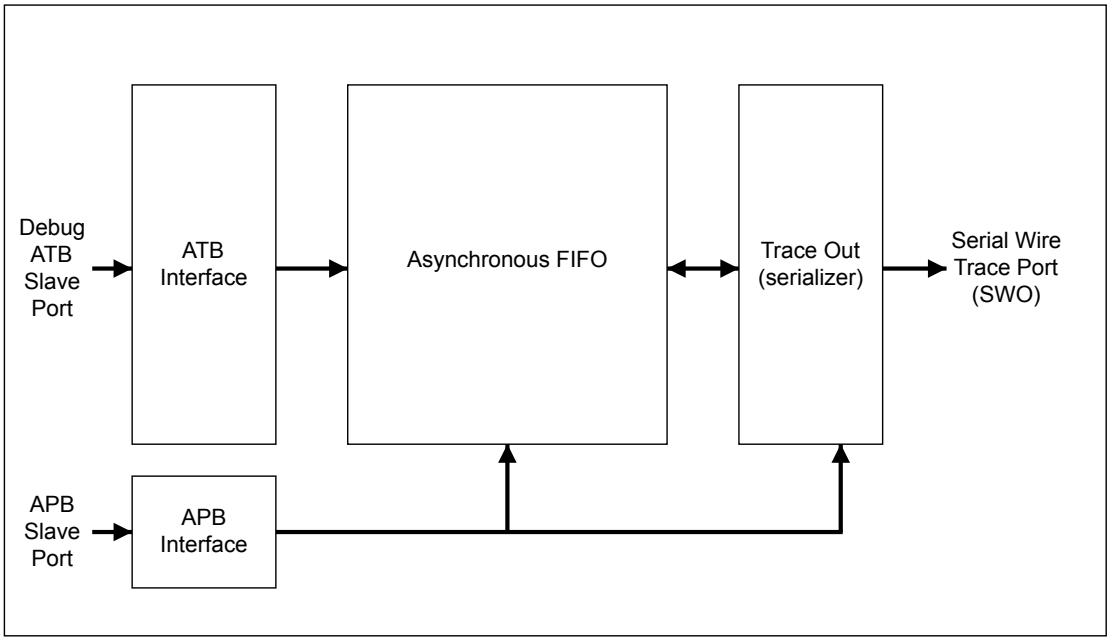

2.2.4 Cortex-M3 System Component Details

The Cortex-M3 includes the following system components:

- SysTick

  A 24-bit count-down timer that can be used as a Real-Time Operating System (RTOS) tick timer or as a simple counter (see “System Timer (SysTick)” on page 91).

- Nested Vectored Interrupt Controller (NVIC)

  An embedded interrupt controller that supports low latency interrupt processing (see “Nested Vectored Interrupt Controller (NVIC)” on page 92).

- System Control Block (SCB)

The programming model interface to the processor. The SCB provides system implementation information and system control, including configuration, control, and reporting of system exceptions (see "System Control Block (SCB)" on page 94).

- Memory Protection Unit (MPU)

  Improves system reliability by defining the memory attributes for different memory regions. The MPU provides up to eight different regions and an optional predefined background region (see "Memory Protection Unit (MPU)" on page 94).

2.3 Programming Model

This section describes the Cortex-M3 programming model. In addition to the individual core register descriptions, information about the processor modes and privilege levels for software execution and stacks is included.

2.3.1 Processor Mode and Privilege Levels for Software Execution

The Cortex-M3 has two modes of operation:

- Thread mode

  Used to execute application software. The processor enters Thread mode when it comes out of reset.

- Handler mode

  Used to handle exceptions. When the processor has finished exception processing, it returns to Thread mode.

In addition, the Cortex-M3 has two privilege levels:

- Unprivileged

  In this mode, software has the following restrictions:

  – Limited access to the `MSR` and `MRS` instructions and no use of the `CPS` instruction

  – No access to the system timer, NVIC, or system control block

  – Possibly restricted access to memory or peripherals

- Privileged

  In this mode, software can use all the instructions and has access to all resources.

In Thread mode, the **CONTROL** register (see page 67) controls whether software execution is privileged or unprivileged. In Handler mode, software execution is always privileged.

Only privileged software can write to the **CONTROL** register to change the privilege level for software execution in Thread mode. Unprivileged software can use the `SVC` instruction to make a supervisor call to transfer control to privileged software.

2.3.2 Stacks

The processor uses a full descending stack, meaning that the stack pointer indicates the last stacked item on the memory. When the processor pushes a new item onto the stack, it decrements the stack pointer and then writes the item to the new memory location. The processor implements two stacks:

the main stack and the process stack, with a pointer for each held in independent registers (see the **SP** register on page 57).

In Thread mode, the **CONTROL** register (see page 67) controls whether the processor uses the main stack or the process stack. In Handler mode, the processor always uses the main stack. The options for processor operations are shown in Table 2-1 on page 54.

Table 2-1. Summary of Processor Mode, Privilege Level, and Stack Use

Processor Mode	Use	Privilege Level	Stack Used
Thread	Applications	Privileged or unprivileged [a]	Main stack or process stack [a]
Handler	Exception handlers	Always privileged	Main stack

a. See **CONTROL** (page 67).

2.3.3 Register Map

Figure 2-3 on page 54 shows the Cortex-M3 register set. Table 2-2 on page 55 lists the Core registers. The core registers are not memory mapped and are accessed by register name, so the base address is n/a (not applicable) and there is no offset.

Figure 2-3. Cortex-M3 Register Set

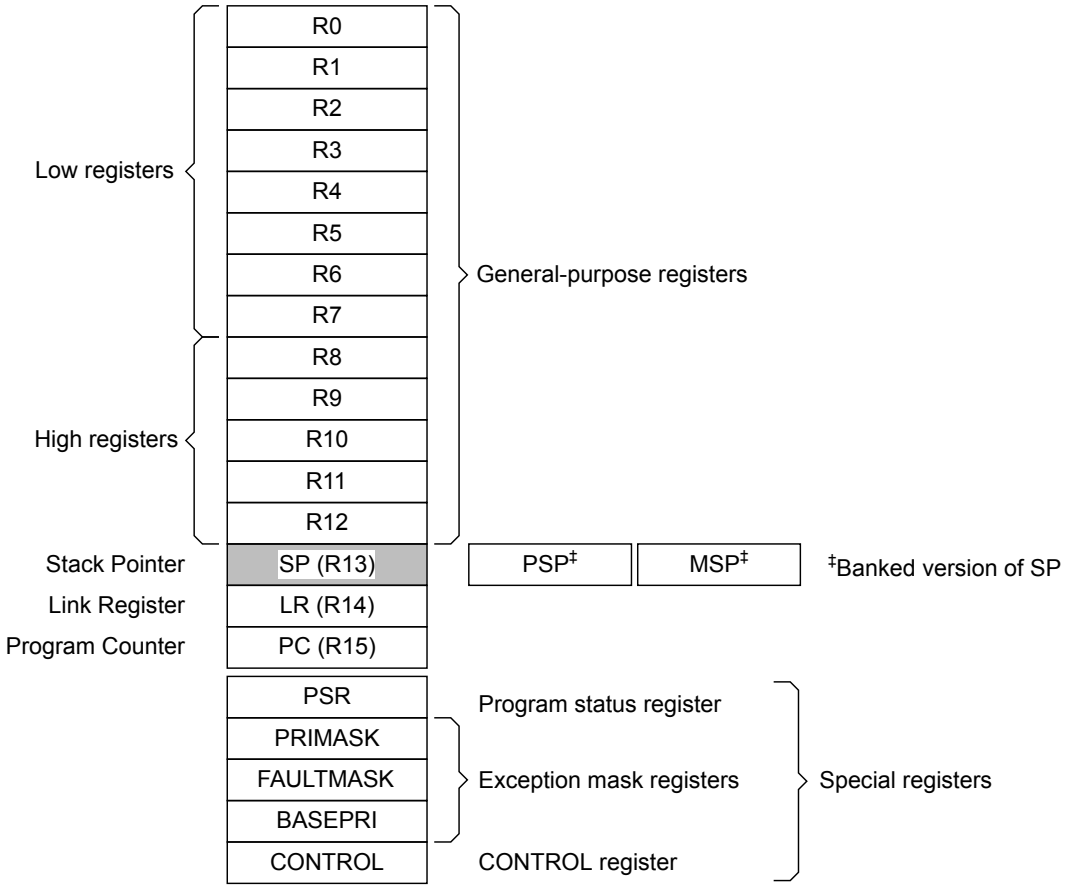

Table 2-2. Processor Register Map

Offset	Name	Type	Reset	Description	See page
-	R0	R/W	-	Cortex General-Purpose Register 0	56
-	R1	R/W	-	Cortex General-Purpose Register 1	56
-	R2	R/W	-	Cortex General-Purpose Register 2	56
-	R3	R/W	-	Cortex General-Purpose Register 3	56
-	R4	R/W	-	Cortex General-Purpose Register 4	56
-	R5	R/W	-	Cortex General-Purpose Register 5	56
-	R6	R/W	-	Cortex General-Purpose Register 6	56
-	R7	R/W	-	Cortex General-Purpose Register 7	56
-	R8	R/W	-	Cortex General-Purpose Register 8	56
-	R9	R/W	-	Cortex General-Purpose Register 9	56
-	R10	R/W	-	Cortex General-Purpose Register 10	56
-	R11	R/W	-	Cortex General-Purpose Register 11	56
-	R12	R/W	-	Cortex General-Purpose Register 12	56
-	SP	R/W	-	Stack Pointer	57
-	LR	R/W	0xFFFF.FFFF	Link Register	58
-	PC	R/W	-	Program Counter	59
-	PSR	R/W	0x0100.0000	Program Status Register	60
-	PRIMASK	R/W	0x0000.0000	Priority Mask Register	64
-	FAULTMASK	R/W	0x0000.0000	Fault Mask Register	65
-	BASEPRI	R/W	0x0000.0000	Base Priority Mask Register	66
-	CONTROL	R/W	0x0000.0000	Control Register	67

2.3.4 Register Descriptions

This section lists and describes the Cortex-M3 registers, in the order shown in Figure 2-3 on page 54. The core registers are not memory mapped and are accessed by register name rather than offset.

Note: The register type shown in the register descriptions refers to type during program execution in Thread mode and Handler mode. Debug access can differ.

Register 1: Cortex General-Purpose Register 0 (R0)

Register 2: Cortex General-Purpose Register 1 (R1)

Register 3: Cortex General-Purpose Register 2 (R2)

Register 4: Cortex General-Purpose Register 3 (R3)

Register 5: Cortex General-Purpose Register 4 (R4)

Register 6: Cortex General-Purpose Register 5 (R5)

Register 7: Cortex General-Purpose Register 6 (R6)

Register 8: Cortex General-Purpose Register 7 (R7)

Register 9: Cortex General-Purpose Register 8 (R8)

Register 10: Cortex General-Purpose Register 9 (R9)

Register 11: Cortex General-Purpose Register 10 (R10)

Register 12: Cortex General-Purpose Register 11 (R11)

Register 13: Cortex General-Purpose Register 12 (R12)

The **Rn** registers are 32-bit general-purpose registers for data operations and can be accessed from either privileged or unprivileged mode.

Cortex General-Purpose Register 0 (R0)

Type R/W, reset -

	31	30	29	28	27	26	25	24	23	22	21	20	19	18	17	16
	DATA															
Type	R/W	R/W	R/W	R/W	R/W	R/W	R/W	R/W	R/W	R/W	R/W	R/W	R/W	R/W	R/W	R/W
Reset	-	-	-	-	-	-	-	-	-	-	-	-	-	-	-	-

	15	14	13	12	11	10	9	8	7	6	5	4	3	2	1	0
	DATA															
Type	R/W	R/W	R/W	R/W	R/W	R/W	R/W	R/W	R/W	R/W	R/W	R/W	R/W	R/W	R/W	R/W
Reset	-	-	-	-	-	-	-	-	-	-	-	-	-	-	-	-

Bit/Field	Name	Type	Reset	Description
31:0	DATA	R/W	-	Register data.

Register 14: Stack Pointer (SP)

The **Stack Pointer (SP)** is register R13. In Thread mode, the function of this register changes depending on the ASP bit in the **Control Register (CONTROL)** register. When the ASP bit is clear, this register is the **Main Stack Pointer (MSP)**. When the ASP bit is set, this register is the **Process Stack Pointer (PSP)**. On reset, the ASP bit is clear, and the processor loads the **MSP** with the value from address 0x0000.0000. The **MSP** can only be accessed in privileged mode; the **PSP** can be accessed in either privileged or unprivileged mode.

Stack Pointer (SP)

Type R/W, reset -

	31	30	29	28	27	26	25	24	23	22	21	20	19	18	17	16
	SP															
Type	R/W	R/W	R/W	R/W	R/W	R/W	R/W	R/W	R/W	R/W	R/W	R/W	R/W	R/W	R/W	R/W
Reset	-	-	-	-	-	-	-	-	-	-	-	-	-	-	-	-

	15	14	13	12	11	10	9	8	7	6	5	4	3	2	1	0
	SP															
Type	R/W	R/W	R/W	R/W	R/W	R/W	R/W	R/W	R/W	R/W	R/W	R/W	R/W	R/W	R/W	R/W
Reset	-	-	-	-	-	-	-	-	-	-	-	-	-	-	-	-

Bit/Field	Name	Type	Reset	Description
31:0	SP	R/W	-	This field is the address of the stack pointer.

Register 15: Link Register (LR)

The **Link Register (LR)** is register R14, and it stores the return information for subroutines, function calls, and exceptions. **LR** can be accessed from either privileged or unprivileged mode.

EXC_RETURN is loaded into **LR** on exception entry. See Table 2-10 on page 84 for the values and description.

Link Register (LR)

Type R/W, reset 0xFFFF.FFFF

	31	30	29	28	27	26	25	24	23	22	21	20	19	18	17	16
	LINK															
Type	R/W	R/W	R/W	R/W	R/W	R/W	R/W	R/W	R/W	R/W	R/W	R/W	R/W	R/W	R/W	R/W
Reset	1	1	1	1	1	1	1	1	1	1	1	1	1	1	1	1

	15	14	13	12	11	10	9	8	7	6	5	4	3	2	1	0
	LINK															
Type	R/W	R/W	R/W	R/W	R/W	R/W	R/W	R/W	R/W	R/W	R/W	R/W	R/W	R/W	R/W	R/W
Reset	1	1	1	1	1	1	1	1	1	1	1	1	1	1	1	1

Bit/Field	Name	Type	Reset	Description
31:0	LINK	R/W	0xFFFF.FFFF	This field is the return address.

Register 16: Program Counter (PC)

The **Program Counter (PC)** is register R15, and it contains the current program address. On reset, the processor loads the **PC** with the value of the reset vector, which is at address 0x0000.0004. Bit 0 of the reset vector is loaded into the THUMB bit of the **EPSR** at reset and must be 1. The **PC** register can be accessed in either privileged or unprivileged mode.

Program Counter (PC)

Type R/W, reset -

	31	30	29	28	27	26	25	24	23	22	21	20	19	18	17	16
	PC															
Type	R/W	R/W	R/W	R/W	R/W	R/W	R/W	R/W	R/W	R/W	R/W	R/W	R/W	R/W	R/W	R/W
Reset	-	-	-	-	-	-	-	-	-	-	-	-	-	-	-	-

	15	14	13	12	11	10	9	8	7	6	5	4	3	2	1	0
	PC															
Type	R/W	R/W	R/W	R/W	R/W	R/W	R/W	R/W	R/W	R/W	R/W	R/W	R/W	R/W	R/W	R/W
Reset	-	-	-	-	-	-	-	-	-	-	-	-	-	-	-	-

Bit/Field	Name	Type	Reset	Description
31:0	PC	R/W	-	This field is the current program address.

Register 17: Program Status Register (PSR)

Note: This register is also referred to as **xPSR**.

The **Program Status Register (PSR)** has three functions, and the register bits are assigned to the different functions:

- **Application Program Status Register (APSR)**, bits 31:27,
- **Execution Program Status Register (EPSR)**, bits 26:24, 15:10
- **Interrupt Program Status Register (IPSR)**, bits 6:0

The **PSR**, **IPSR**, and **EPSR** registers can only be accessed in privileged mode; the **APSR** register can be accessed in either privileged or unprivileged mode.

APSR contains the current state of the condition flags from previous instruction executions.

EPSR contains the Thumb state bit and the execution state bits for the If-Then (`IT`) instruction or the Interruptible-Continuable Instruction (`ICI`) field for an interrupted load multiple or store multiple instruction. Attempts to read the **EPSR** directly through application software using the `MSR` instruction always return zero. Attempts to write the **EPSR** using the `MSR` instruction in application software are always ignored. Fault handlers can examine the **EPSR** value in the stacked **PSR** to determine the operation that faulted (see “Exception Entry and Return” on page 82).

IPSR contains the exception type number of the current Interrupt Service Routine (ISR).

These registers can be accessed individually or as a combination of any two or all three registers, using the register name as an argument to the `MSR` or `MRS` instructions. For example, all of the registers can be read using **PSR** with the `MRS` instruction, or **APSR** only can be written to using **APSR** with the `MSR` instruction. page 60 shows the possible register combinations for the **PSR**. See the `MRS` and `MSR` instruction descriptions in the *Cortex™-M3/M4 Instruction Set Technical User's Manual* for more information about how to access the program status registers.

Table 2-3. PSR Register Combinations

Register	Type	Combination
PSR	R/W[a, b]	**APSR**, **EPSR**, and **IPSR**
IEPSR	RO	**EPSR** and **IPSR**
IAPSR	R/W[a]	**APSR** and **IPSR**
EAPSR	R/W[b]	**APSR** and **EPSR**

a. The processor ignores writes to the **IPSR** bits.

b. Reads of the **EPSR** bits return zero, and the processor ignores writes to these bits.

Program Status Register (PSR)

Type R/W, reset 0x0100.0000

	31	30	29	28	27	26	25	24	23	22	21	20	19	18	17	16
	N	Z	C	V	Q	ICI / IT		THUMB	reserved							
Type	R/W	R/W	R/W	R/W	R/W	RO	RO	RO	RO	RO	RO	RO	RO	RO	RO	RO
Reset	0	0	0	0	0	0	0	1	0	0	0	0	0	0	0	0

	15	14	13	12	11	10	9	8	7	6	5	4	3	2	1	0
	ICI / IT						reserved			ISRNUM						
Type	RO	RO	RO	RO	RO	RO	RO	RO	RO	RO	RO	RO	RO	RO	RO	RO
Reset	0	0	0	0	0	0	0	0	0	0	0	0	0	0	0	0

Bit/Field	Name	Type	Reset	Description
31	N	R/W	0	**APSR** Negative or Less Flag Value Description 1 The previous operation result was negative or less than. 0 The previous operation result was positive, zero, greater than, or equal. The value of this bit is only meaningful when accessing **PSR** or **APSR**.
30	Z	R/W	0	**APSR** Zero Flag Value Description 1 The previous operation result was zero. 0 The previous operation result was non-zero. The value of this bit is only meaningful when accessing **PSR** or **APSR**.
29	C	R/W	0	**APSR** Carry or Borrow Flag Value Description 1 The previous add operation resulted in a carry bit or the previous subtract operation did not result in a borrow bit. 0 The previous add operation did not result in a carry bit or the previous subtract operation resulted in a borrow bit. The value of this bit is only meaningful when accessing **PSR** or **APSR**.
28	V	R/W	0	**APSR** Overflow Flag Value Description 1 The previous operation resulted in an overflow. 0 The previous operation did not result in an overflow. The value of this bit is only meaningful when accessing **PSR** or **APSR**.
27	Q	R/W	0	**APSR** DSP Overflow and Saturation Flag Value Description 1 DSP Overflow or saturation has occurred. 0 DSP overflow or saturation has not occurred since reset or since the bit was last cleared. The value of this bit is only meaningful when accessing **PSR** or **APSR**. This bit is cleared by software using an `MRS` instruction.

Bit/Field	Name	Type	Reset	Description
26:25	ICI / IT	RO	0x0	**EPSR** ICI / IT status These bits, along with bits 15:10, contain the Interruptible-Continuable Instruction (`ICI`) field for an interrupted load multiple or store multiple instruction or the execution state bits of the `IT` instruction. When **EPSR** holds the `ICI` execution state, bits 26:25 are zero. The If-Then block contains up to four instructions following an `IT` instruction. Each instruction in the block is conditional. The conditions for the instructions are either all the same, or some can be the inverse of others. See the *Cortex™-M3/M4 Instruction Set Technical User's Manual* for more information. The value of this field is only meaningful when accessing **PSR** or **EPSR**.
24	THUMB	RO	1	**EPSR** Thumb State This bit indicates the Thumb state and should always be set. The following can clear the `THUMB` bit: ■ The `BLX`, `BX` and `POP{PC}` instructions ■ Restoration from the stacked **xPSR** value on an exception return ■ Bit 0 of the vector value on an exception entry or reset Attempting to execute instructions when this bit is clear results in a fault or lockup. See “Lockup” on page 86 for more information. The value of this bit is only meaningful when accessing **PSR** or **EPSR**.
23:16	reserved	RO	0x00	Software should not rely on the value of a reserved bit. To provide compatibility with future products, the value of a reserved bit should be preserved across a read-modify-write operation.
15:10	ICI / IT	RO	0x0	**EPSR** ICI / IT status These bits, along with bits 26:25, contain the Interruptible-Continuable Instruction (`ICI`) field for an interrupted load multiple or store multiple instruction or the execution state bits of the `IT` instruction. When an interrupt occurs during the execution of an `LDM`, `STM`, `PUSH` or `POP` instruction, the processor stops the load multiple or store multiple instruction operation temporarily and stores the next register operand in the multiple operation to bits 15:12. After servicing the interrupt, the processor returns to the register pointed to by bits 15:12 and resumes execution of the multiple load or store instruction. When **EPSR** holds the `ICI` execution state, bits 11:10 are zero. The If-Then block contains up to four instructions following a 16-bit `IT` instruction. Each instruction in the block is conditional. The conditions for the instructions are either all the same, or some can be the inverse of others. See the *Cortex™-M3/M4 Instruction Set Technical User's Manual* for more information. The value of this field is only meaningful when accessing **PSR** or **EPSR**.
9:7	reserved	RO	0x0	Software should not rely on the value of a reserved bit. To provide compatibility with future products, the value of a reserved bit should be preserved across a read-modify-write operation.

Bit/Field	Name	Type	Reset	Description
6:0	ISRNUM	RO	0x00	**IPSR** ISR Number This field contains the exception type number of the current Interrupt Service Routine (ISR). Value — Description 0x00 — Thread mode 0x01 — Reserved 0x02 — NMI 0x03 — Hard fault 0x04 — Memory management fault 0x05 — Bus fault 0x06 — Usage fault 0x07-0x0A — Reserved 0x0B — SVCall 0x0C — Reserved for Debug 0x0D — Reserved 0x0E — PendSV 0x0F — SysTick 0x10 — Interrupt Vector 0 0x11 — Interrupt Vector 1 ... — ... 0x3F — Interrupt Vector 47 0x40-0x7F — Reserved See “Exception Types” on page 77 for more information. The value of this field is only meaningful when accessing **PSR** or **IPSR**.

Register 18: Priority Mask Register (PRIMASK)

The **PRIMASK** register prevents activation of all exceptions with programmable priority. Reset, non-maskable interrupt (NMI), and hard fault are the only exceptions with fixed priority. Exceptions should be disabled when they might impact the timing of critical tasks. This register is only accessible in privileged mode. The `MSR` and `MRS` instructions are used to access the **PRIMASK** register, and the `CPS` instruction may be used to change the value of the **PRIMASK** register. See the *Cortex™-M3/M4 Instruction Set Technical User's Manual* for more information on these instructions. For more information on exception priority levels, see “Exception Types” on page 77.

Priority Mask Register (PRIMASK)

Type R/W, reset 0x0000.0000

	31	30	29	28	27	26	25	24	23	22	21	20	19	18	17	16
	reserved															
Type	RO	RO	RO	RO	RO	RO	RO	RO	RO	RO	RO	RO	RO	RO	RO	RO
Reset	0	0	0	0	0	0	0	0	0	0	0	0	0	0	0	0

	15	14	13	12	11	10	9	8	7	6	5	4	3	2	1	0
	reserved															PRIMASK
Type	RO	RO	RO	RO	RO	RO	RO	RO	RO	RO	RO	RO	RO	RO	RO	R/W
Reset	0	0	0	0	0	0	0	0	0	0	0	0	0	0	0	0

Bit/Field	Name	Type	Reset	Description
31:1	reserved	RO	0x0000.000	Software should not rely on the value of a reserved bit. To provide compatibility with future products, the value of a reserved bit should be preserved across a read-modify-write operation.
0	PRIMASK	R/W	0	Priority Mask Value Description 1 Prevents the activation of all exceptions with configurable priority. 0 No effect.

Register 19: Fault Mask Register (FAULTMASK)

The **FAULTMASK** register prevents activation of all exceptions except for the Non-Maskable Interrupt (NMI). Exceptions should be disabled when they might impact the timing of critical tasks. This register is only accessible in privileged mode. The `MSR` and `MRS` instructions are used to access the **FAULTMASK** register, and the `CPS` instruction may be used to change the value of the **FAULTMASK** register. See the *Cortex™-M3/M4 Instruction Set Technical User's Manual* for more information on these instructions. For more information on exception priority levels, see "Exception Types" on page 77.

Fault Mask Register (FAULTMASK)

Type R/W, reset 0x0000.0000

	31	30	29	28	27	26	25	24	23	22	21	20	19	18	17	16
	reserved															
Type	RO	RO	RO	RO	RO	RO	RO	RO	RO	RO	RO	RO	RO	RO	RO	RO
Reset	0	0	0	0	0	0	0	0	0	0	0	0	0	0	0	0

	15	14	13	12	11	10	9	8	7	6	5	4	3	2	1	0
	reserved															FAULTMASK
Type	RO	RO	RO	RO	RO	RO	RO	RO	RO	RO	RO	RO	RO	RO	RO	R/W
Reset	0	0	0	0	0	0	0	0	0	0	0	0	0	0	0	0

Bit/Field	Name	Type	Reset	Description
31:1	reserved	RO	0x0000.000	Software should not rely on the value of a reserved bit. To provide compatibility with future products, the value of a reserved bit should be preserved across a read-modify-write operation.
0	FAULTMASK	R/W	0	Fault Mask Value Description 1 Prevents the activation of all exceptions except for NMI. 0 No effect. The processor clears the `FAULTMASK` bit on exit from any exception handler except the NMI handler.

Register 20: Base Priority Mask Register (BASEPRI)

The **BASEPRI** register defines the minimum priority for exception processing. When **BASEPRI** is set to a nonzero value, it prevents the activation of all exceptions with the same or lower priority level as the **BASEPRI** value. Exceptions should be disabled when they might impact the timing of critical tasks. This register is only accessible in privileged mode. For more information on exception priority levels, see “Exception Types” on page 77.

Base Priority Mask Register (BASEPRI)

Type R/W, reset 0x0000.0000

	31	30	29	28	27	26	25	24	23	22	21	20	19	18	17	16
	reserved															
Type	RO	RO	RO	RO	RO	RO	RO	RO	RO	RO	RO	RO	RO	RO	RO	RO
Reset	0	0	0	0	0	0	0	0	0	0	0	0	0	0	0	0

	15	14	13	12	11	10	9	8	7	6	5	4	3	2	1	0
	reserved								BASEPRI			reserved				
Type	RO	RO	RO	RO	RO	RO	RO	RO	R/W	R/W	R/W	RO	RO	RO	RO	RO
Reset	0	0	0	0	0	0	0	0	0	0	0	0	0	0	0	0

Bit/Field	Name	Type	Reset	Description
31:8	reserved	RO	0x0000.00	Software should not rely on the value of a reserved bit. To provide compatibility with future products, the value of a reserved bit should be preserved across a read-modify-write operation.
7:5	BASEPRI	R/W	0x0	Base Priority Any exception that has a programmable priority level with the same or lower priority as the value of this field is masked. The **PRIMASK** register can be used to mask all exceptions with programmable priority levels. Higher priority exceptions have lower priority levels. Value Description 0x0 All exceptions are unmasked. 0x1 All exceptions with priority level 1-7 are masked. 0x2 All exceptions with priority level 2-7 are masked. 0x3 All exceptions with priority level 3-7 are masked. 0x4 All exceptions with priority level 4-7 are masked. 0x5 All exceptions with priority level 5-7 are masked. 0x6 All exceptions with priority level 6-7 are masked. 0x7 All exceptions with priority level 7 are masked.
4:0	reserved	RO	0x0	Software should not rely on the value of a reserved bit. To provide compatibility with future products, the value of a reserved bit should be preserved across a read-modify-write operation.

Register 21: Control Register (CONTROL)

The **CONTROL** register controls the stack used and the privilege level for software execution when the processor is in Thread mode. This register is only accessible in privileged mode.

Handler mode always uses **MSP**, so the processor ignores explicit writes to the ASP bit of the **CONTROL** register when in Handler mode. The exception entry and return mechanisms automatically update the **CONTROL** register based on the EXC_RETURN value (see Table 2-10 on page 84). In an OS environment, threads running in Thread mode should use the process stack and the kernel and exception handlers should use the main stack. By default, Thread mode uses **MSP**. To switch the stack pointer used in Thread mode to **PSP**, either use the MSR instruction to set the ASP bit, as detailed in the *Cortex™-M3/M4 Instruction Set Technical User's Manual*, or perform an exception return to Thread mode with the appropriate EXC_RETURN value, as shown in Table 2-10 on page 84.

Note: When changing the stack pointer, software must use an ISB instruction immediately after the MSR instruction, ensuring that instructions after the ISB execute use the new stack pointer. See the *Cortex™-M3/M4 Instruction Set Technical User's Manual*.

Control Register (CONTROL)

Type R/W, reset 0x0000.0000

	31	30	29	28	27	26	25	24	23	22	21	20	19	18	17	16
	reserved															
Type	RO	RO	RO	RO	RO	RO	RO	RO	RO	RO	RO	RO	RO	RO	RO	RO
Reset	0	0	0	0	0	0	0	0	0	0	0	0	0	0	0	0

	15	14	13	12	11	10	9	8	7	6	5	4	3	2	1	0
	reserved														ASP	TMPL
Type	RO	RO	RO	RO	RO	RO	RO	RO	RO	RO	RO	RO	RO	RO	R/W	R/W
Reset	0	0	0	0	0	0	0	0	0	0	0	0	0	0	0	0

Bit/Field	Name	Type	Reset	Description
31:2	reserved	RO	0x0000.000	Software should not rely on the value of a reserved bit. To provide compatibility with future products, the value of a reserved bit should be preserved across a read-modify-write operation.
1	ASP	R/W	0	Active Stack Pointer Value Description 1 **PSP** is the current stack pointer. 0 **MSP** is the current stack pointer In Handler mode, this bit reads as zero and ignores writes. The Cortex-M3 updates this bit automatically on exception return.
0	TMPL	R/W	0	Thread Mode Privilege Level Value Description 1 Unprivileged software can be executed in Thread mode. 0 Only privileged software can be executed in Thread mode.

2.3.5 Exceptions and Interrupts

The Cortex-M3 processor supports interrupts and system exceptions. The processor and the Nested Vectored Interrupt Controller (NVIC) prioritize and handle all exceptions. An exception changes the normal flow of software control. The processor uses Handler mode to handle all exceptions except for reset. See “Exception Entry and Return” on page 82 for more information.

The NVIC registers control interrupt handling. See “Nested Vectored Interrupt Controller (NVIC)” on page 92 for more information.

2.3.6 Data Types

The Cortex-M3 supports 32-bit words, 16-bit halfwords, and 8-bit bytes. The processor also supports 64-bit data transfer instructions. All instruction and data memory accesses are little endian. See “Memory Regions, Types and Attributes” on page 70 for more information.

2.4 Memory Model

This section describes the processor memory map, the behavior of memory accesses, and the bit-banding features. The processor has a fixed memory map that provides up to 4 GB of addressable memory.

The memory map for the LM3S2678 controller is provided in Table 2-4 on page 68. In this manual, register addresses are given as a hexadecimal increment, relative to the module’s base address as shown in the memory map.

The regions for SRAM and peripherals include bit-band regions. Bit-banding provides atomic operations to bit data (see “Bit-Banding” on page 72).

The processor reserves regions of the Private peripheral bus (PPB) address range for core peripheral registers (see “Cortex-M3 Peripherals” on page 91).

Note: Within the memory map, all reserved space returns a bus fault when read or written.

Table 2-4. Memory Map

Start	End	Description	For details, see page ...
Memory			
0x0000.0000	0x0001.FFFF	On-chip Flash	240
0x0002.0000	0x00FF.FFFF	Reserved	-
0x0100.0000	0x1FFF.FFFF	Reserved for ROM	234
0x2000.0000	0x2000.7FFF	Bit-banded on-chip SRAM	233
0x2000.8000	0x21FF.FFFF	Reserved	-
0x2200.0000	0x220F.FFFF	Bit-band alias of bit-banded on-chip SRAM starting at 0x2000.0000	233
0x2210.0000	0x3FFF.FFFF	Reserved	-
FiRM Peripherals			
0x4000.0000	0x4000.0FFF	Watchdog timer 0	409
0x4000.1000	0x4000.3FFF	Reserved	-
0x4000.4000	0x4000.4FFF	GPIO Port A	334
0x4000.5000	0x4000.5FFF	GPIO Port B	334
0x4000.6000	0x4000.6FFF	GPIO Port C	334
0x4000.7000	0x4000.7FFF	GPIO Port D	334

Table 2-4. Memory Map *(continued)*

Start	End	Description	For details, see page ...
0x4000.8000	0x4000.8FFF	SSI0	522
0x4000.9000	0x4000.BFFF	Reserved	-
0x4000.C000	0x4000.CFFF	UART0	474
0x4000.D000	0x4001.FFFF	Reserved	-
Peripherals			
0x4002.0000	0x4002.3FFF	Reserved	-
0x4002.4000	0x4002.4FFF	GPIO Port E	334
0x4002.5000	0x4002.7FFF	Reserved	-
0x4002.8000	0x4002.8FFF	PWM	605
0x4002.9000	0x4002.BFFF	Reserved	-
0x4002.C000	0x4002.CFFF	QEI0	648
0x4002.D000	0x4002.FFFF	Reserved	-
0x4003.0000	0x4003.0FFF	Timer 0	383
0x4003.1000	0x4003.1FFF	Timer 1	383
0x4003.2000	0x4003.2FFF	Timer 2	383
0x4003.3000	0x4003.3FFF	Timer 3	383
0x4003.4000	0x4003.7FFF	Reserved	-
0x4003.8000	0x4003.8FFF	ADC0	439
0x4003.9000	0x4003.FFFF	Reserved	-
0x4004.0000	0x4004.0FFF	CAN0 Controller	569
0x4004.1000	0x4005.7FFF	Reserved	-
0x4005.8000	0x4005.8FFF	GPIO Port A (AHB aperture)	334
0x4005.9000	0x4005.9FFF	GPIO Port B (AHB aperture)	334
0x4005.A000	0x4005.AFFF	GPIO Port C (AHB aperture)	334
0x4005.B000	0x4005.BFFF	GPIO Port D (AHB aperture)	334
0x4005.C000	0x4005.CFFF	GPIO Port E (AHB aperture)	334
0x4005.D000	0x400F.CFFF	Reserved	-
0x400F.D000	0x400F.DFFF	Flash memory control	240
0x400F.E000	0x400F.EFFF	System control	180
0x400F.F000	0x400F.FFFF	µDMA	283
0x4010.0000	0x41FF.FFFF	Reserved	-
0x4200.0000	0x43FF.FFFF	Bit-banded alias of 0x4000.0000 through 0x400F.FFFF	-
0x4400.0000	0xDFFF.FFFF	Reserved	-
Private Peripheral Bus			
0xE000.0000	0xE000.0FFF	Instrumentation Trace Macrocell (ITM)	51
0xE000.1000	0xE000.1FFF	Data Watchpoint and Trace (DWT)	51
0xE000.2000	0xE000.2FFF	Flash Patch and Breakpoint (FPB)	51
0xE000.3000	0xE000.DFFF	Reserved	-
0xE000.E000	0xE000.EFFF	Cortex-M3 Peripherals (SysTick, NVIC, MPU and SCB)	99
0xE000.F000	0xE003.FFFF	Reserved	-
0xE004.0000	0xE004.0FFF	Trace Port Interface Unit (TPIU)	52

Table 2-4. Memory Map *(continued)*

Start	End	Description	For details, see page ...
0xE004.1000	0xFFFF.FFFF	Reserved	-

2.4.1 Memory Regions, Types and Attributes

The memory map and the programming of the MPU split the memory map into regions. Each region has a defined memory type, and some regions have additional memory attributes. The memory type and attributes determine the behavior of accesses to the region.

The memory types are:

- Normal: The processor can re-order transactions for efficiency and perform speculative reads.
- Device: The processor preserves transaction order relative to other transactions to Device or Strongly Ordered memory.
- Strongly Ordered: The processor preserves transaction order relative to all other transactions.

The different ordering requirements for Device and Strongly Ordered memory mean that the memory system can buffer a write to Device memory but must not buffer a write to Strongly Ordered memory.

An additional memory attribute is Execute Never (XN), which means the processor prevents instruction accesses. A fault exception is generated only on execution of an instruction executed from an XN region.

2.4.2 Memory System Ordering of Memory Accesses

For most memory accesses caused by explicit memory access instructions, the memory system does not guarantee that the order in which the accesses complete matches the program order of the instructions, providing the order does not affect the behavior of the instruction sequence. Normally, if correct program execution depends on two memory accesses completing in program order, software must insert a memory barrier instruction between the memory access instructions (see “Software Ordering of Memory Accesses” on page 71).

However, the memory system does guarantee ordering of accesses to Device and Strongly Ordered memory. For two memory access instructions A1 and A2, if both A1 and A2 are accesses to either Device or Strongly Ordered memory, and if A1 occurs before A2 in program order, A1 is always observed before A2.

2.4.3 Behavior of Memory Accesses

Table 2-5 on page 70 shows the behavior of accesses to each region in the memory map. See “Memory Regions, Types and Attributes” on page 70 for more information on memory types and the XN attribute. Stellaris devices may have reserved memory areas within the address ranges shown below (refer to Table 2-4 on page 68 for more information).

Table 2-5. Memory Access Behavior

Address Range	Memory Region	Memory Type	Execute Never (XN)	Description
0x0000.0000 - 0x1FFF.FFFF	Code	Normal	-	This executable region is for program code. Data can also be stored here.

Table 2-5. Memory Access Behavior *(continued)*

Address Range	Memory Region	Memory Type	Execute Never (XN)	Description
0x2000.0000 - 0x3FFF.FFFF	SRAM	Normal	-	This executable region is for data. Code can also be stored here. This region includes bit band and bit band alias areas (see Table 2-6 on page 73).
0x4000.0000 - 0x5FFF.FFFF	Peripheral	Device	XN	This region includes bit band and bit band alias areas (see Table 2-7 on page 73).
0x6000.0000 - 0x9FFF.FFFF	External RAM	Normal	-	This executable region is for data.
0xA000.0000 - 0xDFFF.FFFF	External device	Device	XN	This region is for external device memory.
0xE000.0000- 0xE00F.FFFF	Private peripheral bus	Strongly Ordered	XN	This region includes the NVIC, system timer, and system control block.
0xE010.0000- 0xFFFF.FFFF	Reserved	-	-	-

The Code, SRAM, and external RAM regions can hold programs. However, it is recommended that programs always use the Code region because the Cortex-M3 has separate buses that can perform instruction fetches and data accesses simultaneously.

The MPU can override the default memory access behavior described in this section. For more information, see “Memory Protection Unit (MPU)” on page 94.

The Cortex-M3 prefetches instructions ahead of execution and speculatively prefetches from branch target addresses.

2.4.4 Software Ordering of Memory Accesses

The order of instructions in the program flow does not always guarantee the order of the corresponding memory transactions for the following reasons:

- The processor can reorder some memory accesses to improve efficiency, providing this does not affect the behavior of the instruction sequence.
- The processor has multiple bus interfaces.
- Memory or devices in the memory map have different wait states.
- Some memory accesses are buffered or speculative.

“Memory System Ordering of Memory Accesses” on page 70 describes the cases where the memory system guarantees the order of memory accesses. Otherwise, if the order of memory accesses is critical, software must include memory barrier instructions to force that ordering. The Cortex-M3 has the following memory barrier instructions:

- The Data Memory Barrier (`DMB`) instruction ensures that outstanding memory transactions complete before subsequent memory transactions.
- The Data Synchronization Barrier (`DSB`) instruction ensures that outstanding memory transactions complete before subsequent instructions execute.
- The Instruction Synchronization Barrier (`ISB`) instruction ensures that the effect of all completed memory transactions is recognizable by subsequent instructions.

Memory barrier instructions can be used in the following situations:

- MPU programming
  - If the MPU settings are changed and the change must be effective on the very next instruction, use a `DSB` instruction to ensure the effect of the MPU takes place immediately at the end of context switching.
  - Use an `ISB` instruction to ensure the new MPU setting takes effect immediately after programming the MPU region or regions, if the MPU configuration code was accessed using a branch or call. If the MPU configuration code is entered using exception mechanisms, then an `ISB` instruction is not required.
- Vector table

  If the program changes an entry in the vector table and then enables the corresponding exception, use a `DMB` instruction between the operations. The `DMB` instruction ensures that if the exception is taken immediately after being enabled, the processor uses the new exception vector.
- Self-modifying code

  If a program contains self-modifying code, use an `ISB` instruction immediately after the code modification in the program. The `ISB` instruction ensures subsequent instruction execution uses the updated program.
- Memory map switching

  If the system contains a memory map switching mechanism, use a `DSB` instruction after switching the memory map in the program. The `DSB` instruction ensures subsequent instruction execution uses the updated memory map.
- Dynamic exception priority change

  When an exception priority has to change when the exception is pending or active, use `DSB` instructions after the change. The change then takes effect on completion of the `DSB` instruction.

Memory accesses to Strongly Ordered memory, such as the System Control Block, do not require the use of `DMB` instructions.

For more information on the memory barrier instructions, see the *Cortex™-M3/M4 Instruction Set Technical User's Manual*.

2.4.5 Bit-Banding

A bit-band region maps each word in a bit-band alias region to a single bit in the bit-band region. The bit-band regions occupy the lowest 1 MB of the SRAM and peripheral memory regions. Accesses to the 32-MB SRAM alias region map to the 1-MB SRAM bit-band region, as shown in Table 2-6 on page 73. Accesses to the 32-MB peripheral alias region map to the 1-MB peripheral bit-band region, as shown in Table 2-7 on page 73. For the specific address range of the bit-band regions, see Table 2-4 on page 68.

Note: A word access to the SRAM or the peripheral bit-band alias region maps to a single bit in the SRAM or peripheral bit-band region.

A word access to a bit band address results in a word access to the underlying memory, and similarly for halfword and byte accesses. This allows bit band accesses to match the access requirements of the underlying peripheral.

Table 2-6. SRAM Memory Bit-Banding Regions

Address Range		Memory Region	Instruction and Data Accesses
Start	End		
0x2000.0000	0x2000.7FFF	SRAM bit-band region	Direct accesses to this memory range behave as SRAM memory accesses, but this region is also bit addressable through bit-band alias.
0x2200.0000	0x220F.FFFF	SRAM bit-band alias	Data accesses to this region are remapped to bit band region. A write operation is performed as read-modify-write. Instruction accesses are not remapped.

Table 2-7. Peripheral Memory Bit-Banding Regions

Address Range		Memory Region	Instruction and Data Accesses
Start	End		
0x4000.0000	0x400F.FFFF	Peripheral bit-band region	Direct accesses to this memory range behave as peripheral memory accesses, but this region is also bit addressable through bit-band alias.
0x4200.0000	0x43FF.FFFF	Peripheral bit-band alias	Data accesses to this region are remapped to bit band region. A write operation is performed as read-modify-write. Instruction accesses are not permitted.

The following formula shows how the alias region maps onto the bit-band region:

```
bit_word_offset = (byte_offset x 32) + (bit_number x 4)
```

```
bit_word_addr = bit_band_base + bit_word_offset
```

where:

bit_word_offset
: The position of the target bit in the bit-band memory region.

bit_word_addr
: The address of the word in the alias memory region that maps to the targeted bit.

bit_band_base
: The starting address of the alias region.

byte_offset
: The number of the byte in the bit-band region that contains the targeted bit.

bit_number
: The bit position, 0-7, of the targeted bit.

Figure 2-4 on page 74 shows examples of bit-band mapping between the SRAM bit-band alias region and the SRAM bit-band region:

- The alias word at 0x23FF.FFE0 maps to bit 0 of the bit-band byte at 0x200F.FFFF:

  ```
  0x23FF.FFE0 = 0x2200.0000 + (0x000F.FFFF*32) + (0*4)
  ```

- The alias word at 0x23FF.FFFC maps to bit 7 of the bit-band byte at 0x200F.FFFF:

  ```
  0x23FF.FFFC = 0x2200.0000 + (0x000F.FFFF*32) + (7*4)
  ```

- The alias word at 0x2200.0000 maps to bit 0 of the bit-band byte at 0x2000.0000:

```
0x2200.0000 = 0x2200.0000 + (0*32) + (0*4)
```

- The alias word at 0x2200.001C maps to bit 7 of the bit-band byte at 0x2000.0000:

```
0x2200.001C = 0x2200.0000+ (0*32) + (7*4)
```

Figure 2-4. Bit-Band Mapping

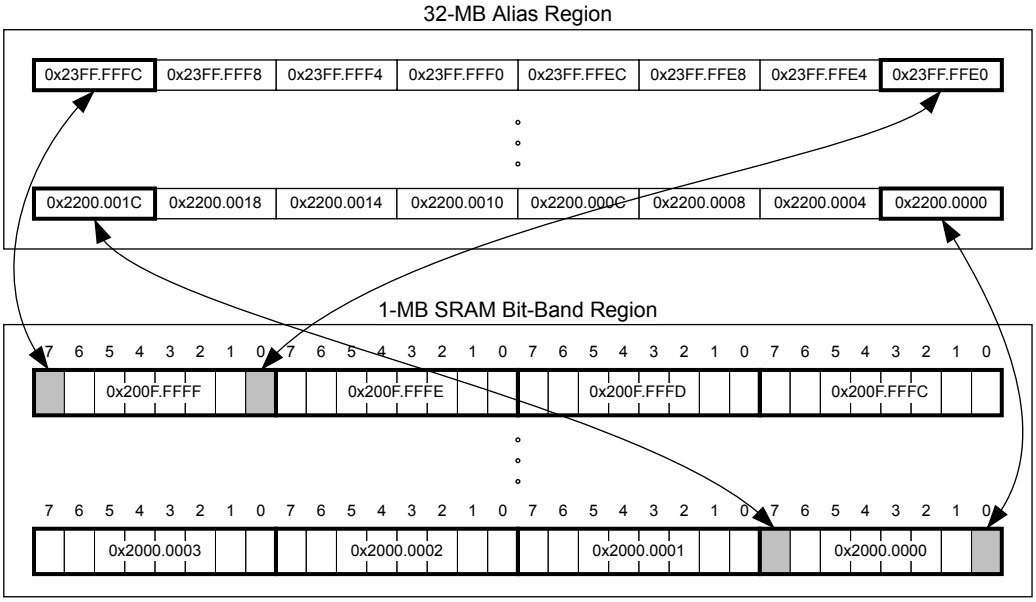

2.4.5.1 Directly Accessing an Alias Region

Writing to a word in the alias region updates a single bit in the bit-band region.

Bit 0 of the value written to a word in the alias region determines the value written to the targeted bit in the bit-band region. Writing a value with bit 0 set writes a 1 to the bit-band bit, and writing a value with bit 0 clear writes a 0 to the bit-band bit.

Bits 31:1 of the alias word have no effect on the bit-band bit. Writing 0x01 has the same effect as writing 0xFF. Writing 0x00 has the same effect as writing 0x0E.

When reading a word in the alias region, 0x0000.0000 indicates that the targeted bit in the bit-band region is clear and 0x0000.0001 indicates that the targeted bit in the bit-band region is set.

2.4.5.2 Directly Accessing a Bit-Band Region

“Behavior of Memory Accesses” on page 70 describes the behavior of direct byte, halfword, or word accesses to the bit-band regions.

2.4.6 Data Storage

The processor views memory as a linear collection of bytes numbered in ascending order from zero. For example, bytes 0-3 hold the first stored word, and bytes 4-7 hold the second stored word. Data is stored in little-endian format, with the least-significant byte (lsbyte) of a word stored at the

lowest-numbered byte, and the most-significant byte (msbyte) stored at the highest-numbered byte. Figure 2-5 on page 75 illustrates how data is stored.

Figure 2-5. Data Storage

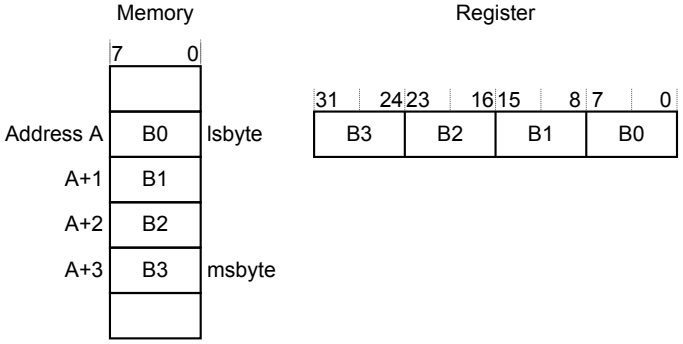

2.4.7 Synchronization Primitives

The Cortex-M3 instruction set includes pairs of synchronization primitives which provide a non-blocking mechanism that a thread or process can use to obtain exclusive access to a memory location. Software can use these primitives to perform a guaranteed read-modify-write memory update sequence or for a semaphore mechanism.

A pair of synchronization primitives consists of:

- A Load-Exclusive instruction, which is used to read the value of a memory location and requests exclusive access to that location.
- A Store-Exclusive instruction, which is used to attempt to write to the same memory location and returns a status bit to a register. If this status bit is clear, it indicates that the thread or process gained exclusive access to the memory and the write succeeds; if this status bit is set, it indicates that the thread or process did not gain exclusive access to the memory and no write was performed.

The pairs of Load-Exclusive and Store-Exclusive instructions are:

- The word instructions `LDREX` and `STREX`
- The halfword instructions `LDREXH` and `STREXH`
- The byte instructions `LDREXB` and `STREXB`

Software must use a Load-Exclusive instruction with the corresponding Store-Exclusive instruction.

To perform an exclusive read-modify-write of a memory location, software must:

1. Use a Load-Exclusive instruction to read the value of the location.
2. Modify the value, as required.
3. Use a Store-Exclusive instruction to attempt to write the new value back to the memory location.
4. Test the returned status bit.

If the status bit is clear, the read-modify-write completed successfully. If the status bit is set, no write was performed, which indicates that the value returned at step 1 might be out of date. The software must retry the entire read-modify-write sequence.

Software can use the synchronization primitives to implement a semaphore as follows:

1. Use a Load-Exclusive instruction to read from the semaphore address to check whether the semaphore is free.
2. If the semaphore is free, use a Store-Exclusive to write the claim value to the semaphore address.
3. If the returned status bit from step 2 indicates that the Store-Exclusive succeeded, then the software has claimed the semaphore. However, if the Store-Exclusive failed, another process might have claimed the semaphore after the software performed step 1.

The Cortex-M3 includes an exclusive access monitor that tags the fact that the processor has executed a Load-Exclusive instruction. The processor removes its exclusive access tag if:

- It executes a `CLREX` instruction.
- It executes a Store-Exclusive instruction, regardless of whether the write succeeds.
- An exception occurs, which means the processor can resolve semaphore conflicts between different threads.

For more information about the synchronization primitive instructions, see the *Cortex™-M3/M4 Instruction Set Technical User's Manual*.

2.5 Exception Model

The ARM Cortex-M3 processor and the Nested Vectored Interrupt Controller (NVIC) prioritize and handle all exceptions in Handler Mode. The processor state is automatically stored to the stack on an exception and automatically restored from the stack at the end of the Interrupt Service Routine (ISR). The vector is fetched in parallel to the state saving, enabling efficient interrupt entry. The processor supports tail-chaining, which enables back-to-back interrupts to be performed without the overhead of state saving and restoration.

Table 2-8 on page 78 lists all exception types. Software can set eight priority levels on seven of these exceptions (system handlers) as well as on 29 interrupts (listed in Table 2-9 on page 79).

Priorities on the system handlers are set with the NVIC **System Handler Priority n (SYSPRIn)** registers. Interrupts are enabled through the NVIC **Interrupt Set Enable n (ENn)** register and prioritized with the NVIC **Interrupt Priority n (PRIn)** registers. Priorities can be grouped by splitting priority levels into preemption priorities and subpriorities. All the interrupt registers are described in “Nested Vectored Interrupt Controller (NVIC)” on page 92.

Internally, the highest user-programmable priority (0) is treated as fourth priority, after a Reset, Non-Maskable Interrupt (NMI), and a Hard Fault, in that order. Note that 0 is the default priority for all the programmable priorities.

Important: After a write to clear an interrupt source, it may take several processor cycles for the NVIC to see the interrupt source de-assert. Thus if the interrupt clear is done as the last action in an interrupt handler, it is possible for the interrupt handler to complete while the NVIC sees the interrupt as still asserted, causing the interrupt handler to be

re-entered errantly. This situation can be avoided by either clearing the interrupt source at the beginning of the interrupt handler or by performing a read or write after the write to clear the interrupt source (and flush the write buffer).

See “Nested Vectored Interrupt Controller (NVIC)” on page 92 for more information on exceptions and interrupts.

2.5.1 Exception States

Each exception is in one of the following states:

- **Inactive.** The exception is not active and not pending.
- **Pending.** The exception is waiting to be serviced by the processor. An interrupt request from a peripheral or from software can change the state of the corresponding interrupt to pending.
- **Active.** An exception that is being serviced by the processor but has not completed.

  Note: An exception handler can interrupt the execution of another exception handler. In this case, both exceptions are in the active state.

- **Active and Pending.** The exception is being serviced by the processor, and there is a pending exception from the same source.

2.5.2 Exception Types

The exception types are:

- **Reset.** Reset is invoked on power up or a warm reset. The exception model treats reset as a special form of exception. When reset is asserted, the operation of the processor stops, potentially at any point in an instruction. When reset is deasserted, execution restarts from the address provided by the reset entry in the vector table. Execution restarts as privileged execution in Thread mode.
- **NMI.** A non-maskable Interrupt (NMI) can be signaled using the NMI signal or triggered by software using the **Interrupt Control and State (INTCTRL)** register. This exception has the highest priority other than reset. NMI is permanently enabled and has a fixed priority of -2. NMIs cannot be masked or prevented from activation by any other exception or preempted by any exception other than reset.
- **Hard Fault.** A hard fault is an exception that occurs because of an error during exception processing, or because an exception cannot be managed by any other exception mechanism. Hard faults have a fixed priority of -1, meaning they have higher priority than any exception with configurable priority.
- **Memory Management Fault.** A memory management fault is an exception that occurs because of a memory protection related fault, including access violation and no match. The MPU or the fixed memory protection constraints determine this fault, for both instruction and data memory transactions. This fault is used to abort instruction accesses to Execute Never (XN) memory regions, even if the MPU is disabled.
- **Bus Fault.** A bus fault is an exception that occurs because of a memory-related fault for an instruction or data memory transaction such as a prefetch fault or a memory access fault. This fault can be enabled or disabled.

- **Usage Fault.** A usage fault is an exception that occurs because of a fault related to instruction execution, such as:
  - An undefined instruction
  - An illegal unaligned access
  - Invalid state on instruction execution
  - An error on exception return

  An unaligned address on a word or halfword memory access or division by zero can cause a usage fault when the core is properly configured.
- **SVCall.** A supervisor call (SVC) is an exception that is triggered by the SVC instruction. In an OS environment, applications can use SVC instructions to access OS kernel functions and device drivers.
- **Debug Monitor.** This exception is caused by the debug monitor (when not halting). This exception is only active when enabled. This exception does not activate if it is a lower priority than the current activation.
- **PendSV.** PendSV is a pendable, interrupt-driven request for system-level service. In an OS environment, use PendSV for context switching when no other exception is active. PendSV is triggered using the **Interrupt Control and State (INTCTRL)** register.
- **SysTick.** A SysTick exception is an exception that the system timer generates when it reaches zero when it is enabled to generate an interrupt. Software can also generate a SysTick exception using the **Interrupt Control and State (INTCTRL)** register. In an OS environment, the processor can use this exception as system tick.
- **Interrupt (IRQ).** An interrupt, or IRQ, is an exception signaled by a peripheral or generated by a software request and fed through the NVIC (prioritized). All interrupts are asynchronous to instruction execution. In the system, peripherals use interrupts to communicate with the processor. Table 2-9 on page 79 lists the interrupts on the LM3S2678 controller.

For an asynchronous exception, other than reset, the processor can execute another instruction between when the exception is triggered and when the processor enters the exception handler.

Privileged software can disable the exceptions that Table 2-8 on page 78 shows as having configurable priority (see the **SYSHNDCTRL** register on page 133 and the **DIS0** register on page 108).

For more information about hard faults, memory management faults, bus faults, and usage faults, see “Fault Handling” on page 84.

Table 2-8. Exception Types

Exception Type	Vector Number	Priority[a]	Vector Address or Offset[b]	Activation
-	0	-	0x0000.0000	Stack top is loaded from the first entry of the vector table on reset.
Reset	1	-3 (highest)	0x0000.0004	Asynchronous
Non-Maskable Interrupt (NMI)	2	-2	0x0000.0008	Asynchronous
Hard Fault	3	-1	0x0000.000C	-
Memory Management	4	programmable[c]	0x0000.0010	Synchronous

Table 2-8. Exception Types *(continued)*

Exception Type	Vector Number	Priority[a]	Vector Address or Offset[b]	Activation
Bus Fault	5	programmable[c]	0x0000.0014	Synchronous when precise and asynchronous when imprecise
Usage Fault	6	programmable[c]	0x0000.0018	Synchronous
-	7-10	-	-	Reserved
SVCall	11	programmable[c]	0x0000.002C	Synchronous
Debug Monitor	12	programmable[c]	0x0000.0030	Synchronous
-	13	-	-	Reserved
PendSV	14	programmable[c]	0x0000.0038	Asynchronous
SysTick	15	programmable[c]	0x0000.003C	Asynchronous
Interrupts	16 and above	programmable[d]	0x0000.0040 and above	Asynchronous

a. 0 is the default priority for all the programmable priorities.

b. See “Vector Table” on page 80.

c. See **SYSPRI1** on page 130.

d. See **PRIn** registers on page 116.

Table 2-9. Interrupts

Vector Number	Interrupt Number (Bit in Interrupt Registers)	Vector Address or Offset	Description
0-15	-	0x0000.0000 - 0x0000.003C	Processor exceptions
16	0	0x0000.0040	GPIO Port A
17	1	0x0000.0044	GPIO Port B
18	2	0x0000.0048	GPIO Port C
19	3	0x0000.004C	GPIO Port D
20	4	0x0000.0050	GPIO Port E
21	5	0x0000.0054	UART0
22	6	-	Reserved
23	7	0x0000.005C	SSI0
24	8	-	Reserved
25	9	0x0000.0064	PWM Fault
26	10	0x0000.0068	PWM Generator 0
27	11	0x0000.006C	PWM Generator 1
28	12	-	Reserved
29	13	0x0000.0074	QEI0
30	14	0x0000.0078	ADC0 Sequence 0
31	15	0x0000.007C	ADC0 Sequence 1
32	16	0x0000.0080	ADC0 Sequence 2
33	17	0x0000.0084	ADC0 Sequence 3
34	18	0x0000.0088	Watchdog Timer 0
35	19	0x0000.008C	Timer 0A
36	20	0x0000.0090	Timer 0B
37	21	0x0000.0094	Timer 1A

Table 2-9. Interrupts *(continued)*

Vector Number	Interrupt Number (Bit in Interrupt Registers)	Vector Address or Offset	Description
38	22	0x0000.0098	Timer 1B
39	23	0x0000.009C	Timer 2A
40	24	0x0000.00A0	Timer 2B
41-43	25-27	-	Reserved
44	28	0x0000.00B0	System Control
45	29	0x0000.00B4	Flash Memory Control
46-50	30-34	-	Reserved
51	35	0x0000.00CC	Timer 3A
52	36	0x0000.00D0	Timer 3B
53-54	37-38	-	Reserved
55	39	0x0000.00DC	CAN0
56-61	40-45	-	Reserved
62	46	0x0000.00F8	µDMA Software
63	47	0x0000.00FC	µDMA Error

2.5.3 Exception Handlers

The processor handles exceptions using:

- **Interrupt Service Routines (ISRs).** Interrupts (IRQx) are the exceptions handled by ISRs.
- **Fault Handlers.** Hard fault, memory management fault, usage fault, and bus fault are fault exceptions handled by the fault handlers.
- **System Handlers.** NMI, PendSV, SVCall, SysTick, and the fault exceptions are all system exceptions that are handled by system handlers.

2.5.4 Vector Table

The vector table contains the reset value of the stack pointer and the start addresses, also called exception vectors, for all exception handlers. The vector table is constructed using the vector address or offset shown in Table 2-8 on page 78. Figure 2-6 on page 81 shows the order of the exception vectors in the vector table. The least-significant bit of each vector must be 1, indicating that the exception handler is Thumb code

Figure 2-6. Vector Table

Exception number	IRQ number	Offset	Vector
63	47	0x00FC	IRQ47
. . .		. . . 0x004C	. . .
18	2	0x0048	IRQ2
17	1	0x0044	IRQ1
16	0	0x0040	IRQ0
15	-1	0x003C	Systick
14	-2	0x0038	PendSV
13			Reserved
12			Reserved for Debug
11	-5	0x002C	SVCall
10			Reserved
9			
8			
7			
6	-10	0x0018	Usage fault
5	-11	0x0014	Bus fault
4	-12	0x0010	Memory management fault
3	-13	0x000C	Hard fault
2	-14	0x0008	NMI
1		0x0004	Reset
		0x0000	Initial SP value

On system reset, the vector table is fixed at address 0x0000.0000. Privileged software can write to the **Vector Table Offset (VTABLE)** register to relocate the vector table start address to a different memory location, in the range 0x0000.0100 to 0x3FFF.FF00 (see “Vector Table” on page 80). Note that when configuring the **VTABLE** register, the offset must be aligned on a 256-byte boundary.

2.5.5 Exception Priorities

As Table 2-8 on page 78 shows, all exceptions have an associated priority, with a lower priority value indicating a higher priority and configurable priorities for all exceptions except Reset, Hard fault, and NMI. If software does not configure any priorities, then all exceptions with a configurable priority have a priority of 0. For information about configuring exception priorities, see page 130 and page 116.

Note: Configurable priority values for the Stellaris implementation are in the range 0-7. This means that the Reset, Hard fault, and NMI exceptions, with fixed negative priority values, always have higher priority than any other exception.

For example, assigning a higher priority value to IRQ[0] and a lower priority value to IRQ[1] means that IRQ[1] has higher priority than IRQ[0]. If both IRQ[1] and IRQ[0] are asserted, IRQ[1] is processed before IRQ[0].

If multiple pending exceptions have the same priority, the pending exception with the lowest exception number takes precedence. For example, if both IRQ[0] and IRQ[1] are pending and have the same priority, then IRQ[0] is processed before IRQ[1].

When the processor is executing an exception handler, the exception handler is preempted if a higher priority exception occurs. If an exception occurs with the same priority as the exception being handled, the handler is not preempted, irrespective of the exception number. However, the status of the new interrupt changes to pending.

2.5.6 Interrupt Priority Grouping

To increase priority control in systems with interrupts, the NVIC supports priority grouping. This grouping divides each interrupt priority register entry into two fields:

- An upper field that defines the group priority
- A lower field that defines a subpriority within the group

Only the group priority determines preemption of interrupt exceptions. When the processor is executing an interrupt exception handler, another interrupt with the same group priority as the interrupt being handled does not preempt the handler.

If multiple pending interrupts have the same group priority, the subpriority field determines the order in which they are processed. If multiple pending interrupts have the same group priority and subpriority, the interrupt with the lowest IRQ number is processed first.

For information about splitting the interrupt priority fields into group priority and subpriority, see page 124.

2.5.7 Exception Entry and Return

Descriptions of exception handling use the following terms:

- **Preemption.** When the processor is executing an exception handler, an exception can preempt the exception handler if its priority is higher than the priority of the exception being handled. See “Interrupt Priority Grouping” on page 82 for more information about preemption by an interrupt. When one exception preempts another, the exceptions are called nested exceptions. See “Exception Entry” on page 83 more information.
- **Return.** Return occurs when the exception handler is completed, and there is no pending exception with sufficient priority to be serviced and the completed exception handler was not handling a late-arriving exception. The processor pops the stack and restores the processor state to the state it had before the interrupt occurred. See “Exception Return” on page 84 for more information.
- **Tail-Chaining.** This mechanism speeds up exception servicing. On completion of an exception handler, if there is a pending exception that meets the requirements for exception entry, the stack pop is skipped and control transfers to the new exception handler.
- **Late-Arriving.** This mechanism speeds up preemption. If a higher priority exception occurs during state saving for a previous exception, the processor switches to handle the higher priority exception and initiates the vector fetch for that exception. State saving is not affected by late arrival because the state saved is the same for both exceptions. Therefore, the state saving continues uninterrupted. The processor can accept a late arriving exception until the first instruction of the exception handler of the original exception enters the execute stage of the processor. On

return from the exception handler of the late-arriving exception, the normal tail-chaining rules apply.

2.5.7.1 Exception Entry

Exception entry occurs when there is a pending exception with sufficient priority and either the processor is in Thread mode or the new exception is of higher priority than the exception being handled, in which case the new exception preempts the original exception.

When one exception preempts another, the exceptions are nested.

Sufficient priority means the exception has more priority than any limits set by the mask registers (see **PRIMASK** on page 64, **FAULTMASK** on page 65, and **BASEPRI** on page 66). An exception with less priority than this is pending but is not handled by the processor.

When the processor takes an exception, unless the exception is a tail-chained or a late-arriving exception, the processor pushes information onto the current stack. This operation is referred to as *stacking* and the structure of eight data words is referred to as *stack frame*.

Figure 2-7. Exception Stack Frame

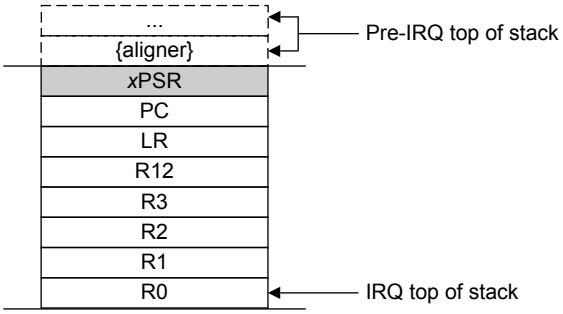

Immediately after stacking, the stack pointer indicates the lowest address in the stack frame. Unless stack alignment is disabled, the stack frame is aligned to a double-word address. If the `STKALIGN` bit of the **Configuration Control (CCR)** register is set, stack align adjustment is performed during stacking.

The stack frame includes the return address, which is the address of the next instruction in the interrupted program. This value is restored to the **PC** at exception return so that the interrupted program resumes.

In parallel to the stacking operation, the processor performs a vector fetch that reads the exception handler start address from the vector table. When stacking is complete, the processor starts executing the exception handler. At the same time, the processor writes an EXC_RETURN value to the **LR**, indicating which stack pointer corresponds to the stack frame and what operation mode the processor was in before the entry occurred.

If no higher-priority exception occurs during exception entry, the processor starts executing the exception handler and automatically changes the status of the corresponding pending interrupt to active.

If another higher-priority exception occurs during exception entry, known as late arrival, the processor starts executing the exception handler for this exception and does not change the pending status of the earlier exception.

2.5.7.2 Exception Return

Exception return occurs when the processor is in Handler mode and executes one of the following instructions to load the EXC_RETURN value into the **PC**:

- An LDM or POP instruction that loads the **PC**
- A BX instruction using any register
- An LDR instruction with the **PC** as the destination

EXC_RETURN is the value loaded into the **LR** on exception entry. The exception mechanism relies on this value to detect when the processor has completed an exception handler. The lowest four bits of this value provide information on the return stack and processor mode. Table 2-10 on page 84 shows the EXC_RETURN values with a description of the exception return behavior.

EXC_RETURN bits 31:4 are all set. When this value is loaded into the **PC**, it indicates to the processor that the exception is complete, and the processor initiates the appropriate exception return sequence.

Table 2-10. Exception Return Behavior

EXC_RETURN[31:0]	Description
0xFFFF.FFF0	Reserved
0xFFFF.FFF1	Return to Handler mode. Exception return uses state from **MSP**. Execution uses **MSP** after return.
0xFFFF.FFF2 - 0xFFFF.FFF8	Reserved
0xFFFF.FFF9	Return to Thread mode. Exception return uses state from **MSP**. Execution uses **MSP** after return.
0xFFFF.FFFA - 0xFFFF.FFFC	Reserved
0xFFFF.FFFD	Return to Thread mode. Exception return uses state from **PSP**. Execution uses **PSP** after return.
0xFFFF.FFFE - 0xFFFF.FFFF	Reserved

2.6 Fault Handling

Faults are a subset of the exceptions (see “Exception Model” on page 76). The following conditions generate a fault:

- A bus error on an instruction fetch or vector table load or a data access.
- An internally detected error such as an undefined instruction or an attempt to change state with a BX instruction.
- Attempting to execute an instruction from a memory region marked as Non-Executable (XN).
- An MPU fault because of a privilege violation or an attempt to access an unmanaged region.

2.6.1 Fault Types

Table 2-11 on page 85 shows the types of fault, the handler used for the fault, the corresponding fault status register, and the register bit that indicates the fault has occurred. See page 137 for more information about the fault status registers.

Table 2-11. Faults

Fault	Handler	Fault Status Register	Bit Name
Bus error on a vector read	Hard fault	**Hard Fault Status (HFAULTSTAT)**	VECT
Fault escalated to a hard fault	Hard fault	**Hard Fault Status (HFAULTSTAT)**	FORCED
MPU or default memory mismatch on instruction access	Memory management fault	**Memory Management Fault Status (MFAULTSTAT)**	IERR [a]
MPU or default memory mismatch on data access	Memory management fault	**Memory Management Fault Status (MFAULTSTAT)**	DERR
MPU or default memory mismatch on exception stacking	Memory management fault	**Memory Management Fault Status (MFAULTSTAT)**	MSTKE
MPU or default memory mismatch on exception unstacking	Memory management fault	**Memory Management Fault Status (MFAULTSTAT)**	MUSTKE
Bus error during exception stacking	Bus fault	**Bus Fault Status (BFAULTSTAT)**	BSTKE
Bus error during exception unstacking	Bus fault	**Bus Fault Status (BFAULTSTAT)**	BUSTKE
Bus error during instruction prefetch	Bus fault	**Bus Fault Status (BFAULTSTAT)**	IBUS
Precise data bus error	Bus fault	**Bus Fault Status (BFAULTSTAT)**	PRECISE
Imprecise data bus error	Bus fault	**Bus Fault Status (BFAULTSTAT)**	IMPRE
Attempt to access a coprocessor	Usage fault	**Usage Fault Status (UFAULTSTAT)**	NOCP
Undefined instruction	Usage fault	**Usage Fault Status (UFAULTSTAT)**	UNDEF
Attempt to enter an invalid instruction set state [b]	Usage fault	**Usage Fault Status (UFAULTSTAT)**	INVSTAT
Invalid EXC_RETURN value	Usage fault	**Usage Fault Status (UFAULTSTAT)**	INVPC
Illegal unaligned load or store	Usage fault	**Usage Fault Status (UFAULTSTAT)**	UNALIGN
Divide by 0	Usage fault	**Usage Fault Status (UFAULTSTAT)**	DIV0

a. Occurs on an access to an XN region even if the MPU is disabled.

b. Attempting to use an instruction set other than the Thumb instruction set, or returning to a non load-store-multiple instruction with ICI continuation.

2.6.2 Fault Escalation and Hard Faults

All fault exceptions except for hard fault have configurable exception priority (see **SYSPRI1** on page 130). Software can disable execution of the handlers for these faults (see **SYSHNDCTRL** on page 133).

Usually, the exception priority, together with the values of the exception mask registers, determines whether the processor enters the fault handler, and whether a fault handler can preempt another fault handler as described in “Exception Model” on page 76.

In some situations, a fault with configurable priority is treated as a hard fault. This process is called priority escalation, and the fault is described as *escalated to hard fault*. Escalation to hard fault occurs when:

- A fault handler causes the same kind of fault as the one it is servicing. This escalation to hard fault occurs because a fault handler cannot preempt itself because it must have the same priority as the current priority level.

- A fault handler causes a fault with the same or lower priority as the fault it is servicing. This situation happens because the handler for the new fault cannot preempt the currently executing fault handler.
- An exception handler causes a fault for which the priority is the same as or lower than the currently executing exception.
- A fault occurs and the handler for that fault is not enabled.

If a bus fault occurs during a stack push when entering a bus fault handler, the bus fault does not escalate to a hard fault. Thus if a corrupted stack causes a fault, the fault handler executes even though the stack push for the handler failed. The fault handler operates but the stack contents are corrupted.

Note: Only Reset and NMI can preempt the fixed priority hard fault. A hard fault can preempt any exception other than Reset, NMI, or another hard fault.

2.6.3 Fault Status Registers and Fault Address Registers

The fault status registers indicate the cause of a fault. For bus faults and memory management faults, the fault address register indicates the address accessed by the operation that caused the fault, as shown in Table 2-12 on page 86.

Table 2-12. Fault Status and Fault Address Registers

Handler	Status Register Name	Address Register Name	Register Description
Hard fault	**Hard Fault Status (HFAULTSTAT)**	-	page 143
Memory management fault	**Memory Management Fault Status (MFAULTSTAT)**	**Memory Management Fault Address (MMADDR)**	page 137 page 144
Bus fault	**Bus Fault Status (BFAULTSTAT)**	**Bus Fault Address (FAULTADDR)**	page 137 page 145
Usage fault	**Usage Fault Status (UFAULTSTAT)**	-	page 137

2.6.4 Lockup

The processor enters a lockup state if a hard fault occurs when executing the NMI or hard fault handlers. When the processor is in the lockup state, it does not execute any instructions. The processor remains in lockup state until it is reset, an NMI occurs, or it is halted by a debugger.

Note: If the lockup state occurs from the NMI handler, a subsequent NMI does not cause the processor to leave the lockup state.

2.7 Power Management

The Cortex-M3 processor sleep modes reduce power consumption:

- Sleep mode stops the processor clock.
- Deep-sleep mode stops the system clock and switches off the PLL and Flash memory.

The SLEEPDEEP bit of the **System Control (SYSCTRL)** register selects which sleep mode is used (see page 126). For more information about the behavior of the sleep modes, see “System Control” on page 177.

This section describes the mechanisms for entering sleep mode and the conditions for waking up from sleep mode, both of which apply to Sleep mode and Deep-sleep mode.

2.7.1 Entering Sleep Modes

This section describes the mechanisms software can use to put the processor into one of the sleep modes.

The system can generate spurious wake-up events, for example a debug operation wakes up the processor. Therefore, software must be able to put the processor back into sleep mode after such an event. A program might have an idle loop to put the processor back to sleep mode.

2.7.1.1 Wait for Interrupt

The wait for interrupt instruction, `WFI`, causes immediate entry to sleep mode unless the wake-up condition is true (see “Wake Up from WFI or Sleep-on-Exit” on page 87). When the processor executes a `WFI` instruction, it stops executing instructions and enters sleep mode. See the *Cortex™-M3/M4 Instruction Set Technical User's Manual* for more information.

2.7.1.2 Wait for Event

The wait for event instruction, `WFE`, causes entry to sleep mode conditional on the value of a one-bit event register. When the processor executes a `WFE` instruction, it checks the event register. If the register is 0, the processor stops executing instructions and enters sleep mode. If the register is 1, the processor clears the register and continues executing instructions without entering sleep mode.

If the event register is 1, the processor must not enter sleep mode on execution of a `WFE` instruction. Typically, this situation occurs if an `SEV` instruction has been executed. Software cannot access this register directly.

See the *Cortex™-M3/M4 Instruction Set Technical User's Manual* for more information.

2.7.1.3 Sleep-on-Exit

If the `SLEEPEXIT` bit of the **SYSCTRL** register is set, when the processor completes the execution of all exception handlers, it returns to Thread mode and immediately enters sleep mode. This mechanism can be used in applications that only require the processor to run when an exception occurs.

2.7.2 Wake Up from Sleep Mode

The conditions for the processor to wake up depend on the mechanism that cause it to enter sleep mode.

2.7.2.1 Wake Up from WFI or Sleep-on-Exit

Normally, the processor wakes up only when the NVIC detects an exception with sufficient priority to cause exception entry. Some embedded systems might have to execute system restore tasks after the processor wakes up and before executing an interrupt handler. Entry to the interrupt handler can be delayed by setting the `PRIMASK` bit and clearing the `FAULTMASK` bit. If an interrupt arrives that is enabled and has a higher priority than current exception priority, the processor wakes up but does not execute the interrupt handler until the processor clears `PRIMASK`. For more information about **PRIMASK** and **FAULTMASK**, see page 64 and page 65.

2.7.2.2 Wake Up from WFE

The processor wakes up if it detects an exception with sufficient priority to cause exception entry.

In addition, if the SEVONPEND bit in the **SYSCTRL** register is set, any new pending interrupt triggers an event and wakes up the processor, even if the interrupt is disabled or has insufficient priority to cause exception entry. For more information about **SYSCTRL**, see page 126.

2.8 Instruction Set Summary

The processor implements a version of the Thumb instruction set. Table 2-13 on page 88 lists the supported instructions.

Note: In Table 2-13 on page 88:

- Angle brackets, <>, enclose alternative forms of the operand
- Braces, {}, enclose optional operands
- The Operands column is not exhaustive
- Op2 is a flexible second operand that can be either a register or a constant
- Most instructions can use an optional condition code suffix

For more information on the instructions and operands, see the instruction descriptions in the *Cortex™-M3/M4 Instruction Set Technical User's Manual*.

Table 2-13. Cortex-M3 Instruction Summary

Mnemonic	Operands	Brief Description	Flags
ADC, ADCS	{Rd,} Rn, Op2	Add with carry	N,Z,C,V
ADD, ADDS	{Rd,} Rn, Op2	Add	N,Z,C,V
ADD, ADDW	{Rd,} Rn , #imm12	Add	N,Z,C,V
ADR	Rd, label	Load PC-relative address	-
AND, ANDS	{Rd,} Rn, Op2	Logical AND	N,Z,C
ASR, ASRS	Rd, Rm, <Rs|#n>	Arithmetic shift right	N,Z,C
B	label	Branch	-
BFC	Rd, #lsb, #width	Bit field clear	-
BFI	Rd, Rn, #lsb, #width	Bit field insert	-
BIC, BICS	{Rd,} Rn, Op2	Bit clear	N,Z,C
BKPT	#imm	Breakpoint	-
BL	label	Branch with link	-
BLX	Rm	Branch indirect with link	-
BX	Rm	Branch indirect	-
CBNZ	Rn, label	Compare and branch if non-zero	-
CBZ	Rn, label	Compare and branch if zero	-
CLREX	-	Clear exclusive	-
CLZ	Rd, Rm	Count leading zeros	-
CMN	Rn, Op2	Compare negative	N,Z,C,V
CMP	Rn, Op2	Compare	N,Z,C,V
CPSID	i	Change processor state, disable interrupts	-
CPSIE	i	Change processor state, enable interrupts	-
DMB	-	Data memory barrier	-
DSB	-	Data synchronization barrier	-

Table 2-13. Cortex-M3 Instruction Summary *(continued)*

Mnemonic	Operands	Brief Description	Flags
EOR, EORS	{Rd,} Rn, Op2	Exclusive OR	N,Z,C
ISB	-	Instruction synchronization barrier	-
IT	-	If-Then condition block	-
LDM	Rn{!}, reglist	Load multiple registers, increment after	-
LDMDB, LDMEA	Rn{!}, reglist	Load multiple registers, decrement before	-
LDMFD, LDMIA	Rn{!}, reglist	Load multiple registers, increment after	-
LDR	Rt, [Rn, #offset]	Load register with word	-
LDRB, LDRBT	Rt, [Rn, #offset]	Load register with byte	-
LDRD	Rt, Rt2, [Rn, #offset]	Load register with two bytes	-
LDREX	Rt, [Rn, #offset]	Load register exclusive	-
LDREXB	Rt, [Rn]	Load register exclusive with byte	-
LDREXH	Rt, [Rn]	Load register exclusive with halfword	-
LDRH, LDRHT	Rt, [Rn, #offset]	Load register with halfword	-
LDRSB, LDRSBT	Rt, [Rn, #offset]	Load register with signed byte	-
LDRSH, LDRSHT	Rt, [Rn, #offset]	Load register with signed halfword	-
LDRT	Rt, [Rn, #offset]	Load register with word	-
LSL, LSLS	Rd, Rm, <Rs|#n>	Logical shift left	N,Z,C
LSR, LSRS	Rd, Rm, <Rs|#n>	Logical shift right	N,Z,C
MLA	Rd, Rn, Rm, Ra	Multiply with accumulate, 32-bit result	-
MLS	Rd, Rn, Rm, Ra	Multiply and subtract, 32-bit result	-
MOV, MOVS	Rd, Op2	Move	N,Z,C
MOV, MOVW	Rd, #imm16	Move 16-bit constant	N,Z,C
MOVT	Rd, #imm16	Move top	-
MRS	Rd, spec_reg	Move from special register to general register	-
MSR	spec_reg, Rm	Move from general register to special register	N,Z,C,V
MUL, MULS	{Rd,} Rn, Rm	Multiply, 32-bit result	N,Z
MVN, MVNS	Rd, Op2	Move NOT	N,Z,C
NOP	-	No operation	-
ORN, ORNS	{Rd,} Rn, Op2	Logical OR NOT	N,Z,C
ORR, ORRS	{Rd,} Rn, Op2	Logical OR	N,Z,C
POP	reglist	Pop registers from stack	-
PUSH	reglist	Push registers onto stack	-
RBIT	Rd, Rn	Reverse bits	-
REV	Rd, Rn	Reverse byte order in a word	-
REV16	Rd, Rn	Reverse byte order in each halfword	-
REVSH	Rd, Rn	Reverse byte order in bottom halfword and sign extend	-
ROR, RORS	Rd, Rm, <Rs|#n>	Rotate right	N,Z,C
RRX, RRXS	Rd, Rm	Rotate right with extend	N,Z,C

Table 2-13. Cortex-M3 Instruction Summary *(continued)*

Mnemonic	Operands	Brief Description	Flags
RSB, RSBS	{Rd,} Rn, Op2	Reverse subtract	N,Z,C,V
SBC, SBCS	{Rd,} Rn, Op2	Subtract with carry	N,Z,C,V
SBFX	Rd, Rn, #lsb, #width	Signed bit field extract	-
SDIV	{Rd,} Rn, Rm	Signed divide	-
SEV	-	Send event	-
SMLAL	RdLo, RdHi, Rn, Rm	Signed multiply with accumulate (32x32+64), 64-bit result	-
SMULL	RdLo, RdHi, Rn, Rm	Signed multiply (32x32), 64-bit result	-
SSAT	Rd, #n, Rm {,shift #s}	Signed saturate	Q
STM	Rn{!}, reglist	Store multiple registers, increment after	-
STMDB, STMEA	Rn{!}, reglist	Store multiple registers, decrement before	-
STMFD, STMIA	Rn{!}, reglist	Store multiple registers, increment after	-
STR	Rt, [Rn {, #offset}]	Store register word	-
STRB, STRBT	Rt, [Rn {, #offset}]	Store register byte	-
STRD	Rt, Rt2, [Rn {, #offset}]	Store register two words	-
STREX	Rt, Rt, [Rn {, #offset}]	Store register exclusive	-
STREXB	Rd, Rt, [Rn]	Store register exclusive byte	-
STREXH	Rd, Rt, [Rn]	Store register exclusive halfword	-
STRH, STRHT	Rt, [Rn {, #offset}]	Store register halfword	-
STRSB, STRSBT	Rt, [Rn {, #offset}]	Store register signed byte	-
STRSH, STRSHT	Rt, [Rn {, #offset}]	Store register signed halfword	-
STRT	Rt, [Rn {, #offset}]	Store register word	-
SUB, SUBS	{Rd,} Rn, Op2	Subtract	N,Z,C,V
SUB, SUBW	{Rd,} Rn, #imm12	Subtract 12-bit constant	N,Z,C,V
SVC	#imm	Supervisor call	-
SXTB	{Rd,} Rm {,ROR #n}	Sign extend a byte	-
SXTH	{Rd,} Rm {,ROR #n}	Sign extend a halfword	-
TBB	[Rn, Rm]	Table branch byte	-
TBH	[Rn, Rm, LSL #1]	Table branch halfword	-
TEQ	Rn, Op2	Test equivalence	N,Z,C
TST	Rn, Op2	Test	N,Z,C
UBFX	Rd, Rn, #lsb, #width	Unsigned bit field extract	-
UDIV	{Rd,} Rn, Rm	Unsigned divide	-
UMLAL	RdLo, RdHi, Rn, Rm	Unsigned multiply with accumulate (32x32+32+32), 64-bit result	-
UMULL	RdLo, RdHi, Rn, Rm	Unsigned multiply (32x 2), 64-bit result	-
USAT	Rd, #n, Rm {,shift #s}	Unsigned Saturate	Q
UXTB	{Rd,} Rm, {,ROR #n}	Zero extend a Byte	-
UXTH	{Rd,} Rm, {,ROR #n}	Zero extend a Halfword	-
WFE	-	Wait for event	-
WFI	-	Wait for interrupt	-

3 Cortex-M3 Peripherals

This chapter provides information on the Stellaris® implementation of the Cortex-M3 processor peripherals, including:

- SysTick (see page 91)

  Provides a simple, 24-bit clear-on-write, decrementing, wrap-on-zero counter with a flexible control mechanism.

- Nested Vectored Interrupt Controller (NVIC) (see page 92)
  - Facilitates low-latency exception and interrupt handling
  - Controls power management
  - Implements system control registers

- System Control Block (SCB) (see page 94)

  Provides system implementation information and system control, including configuration, control, and reporting of system exceptions.

- Memory Protection Unit (MPU) (see page 94)

  Supports the standard ARMv7 Protected Memory System Architecture (PMSA) model. The MPU provides full support for protection regions, overlapping protection regions, access permissions, and exporting memory attributes to the system.

Table 3-1 on page 91 shows the address map of the Private Peripheral Bus (PPB). Some peripheral register regions are split into two address regions, as indicated by two addresses listed.

Table 3-1. Core Peripheral Register Regions

Address	Core Peripheral	Description (see page ...)
0xE000.E010-0xE000.E01F	System Timer	91
0xE000.E100-0xE000.E4EF 0xE000.EF00-0xE000.EF03	Nested Vectored Interrupt Controller	92
0xE000.ED00-0xE000.ED3F	System Control Block	94
0xE000.ED90-0xE000.EDB8	Memory Protection Unit	94

3.1 Functional Description

This chapter provides information on the Stellaris implementation of the Cortex-M3 processor peripherals: SysTick, NVIC, SCB and MPU.

3.1.1 System Timer (SysTick)

Cortex-M3 includes an integrated system timer, SysTick, which provides a simple, 24-bit clear-on-write, decrementing, wrap-on-zero counter with a flexible control mechanism. The counter can be used in several different ways, for example as:

- An RTOS tick timer that fires at a programmable rate (for example, 100 Hz) and invokes a SysTick routine.

- A high-speed alarm timer using the system clock.

- A variable rate alarm or signal timer—the duration is range-dependent on the reference clock used and the dynamic range of the counter.
- A simple counter used to measure time to completion and time used.
- An internal clock source control based on missing/meeting durations. The `COUNT` bit in the **STCTRL** control and status register can be used to determine if an action completed within a set duration, as part of a dynamic clock management control loop.

The timer consists of three registers:

- **SysTick Control and Status (STCTRL)**: A control and status counter to configure its clock, enable the counter, enable the SysTick interrupt, and determine counter status.
- **SysTick Reload Value (STRELOAD)**: The reload value for the counter, used to provide the counter's wrap value.
- **SysTick Current Value (STCURRENT)**: The current value of the counter.

When enabled, the timer counts down on each clock from the reload value to zero, reloads (wraps) to the value in the **STRELOAD** register on the next clock edge, then decrements on subsequent clocks. Clearing the **STRELOAD** register disables the counter on the next wrap. When the counter reaches zero, the `COUNT` status bit is set. The `COUNT` bit clears on reads.

Writing to the **STCURRENT** register clears the register and the `COUNT` status bit. The write does not trigger the SysTick exception logic. On a read, the current value is the value of the register at the time the register is accessed.

The SysTick counter runs on the system clock. If this clock signal is stopped for low power mode, the SysTick counter stops. Ensure software uses aligned word accesses to access the SysTick registers.

Note: When the processor is halted for debugging, the counter does not decrement.

3.1.2 Nested Vectored Interrupt Controller (NVIC)

This section describes the Nested Vectored Interrupt Controller (NVIC) and the registers it uses. The NVIC supports:

- 29 interrupts.
- A programmable priority level of 0-7 for each interrupt. A higher level corresponds to a lower priority, so level 0 is the highest interrupt priority.
- Low-latency exception and interrupt handling.
- Level and pulse detection of interrupt signals.
- Dynamic reprioritization of interrupts.
- Grouping of priority values into group priority and subpriority fields.
- Interrupt tail-chaining.
- An external Non-maskable interrupt (NMI).

The processor automatically stacks its state on exception entry and unstacks this state on exception exit, with no instruction overhead, providing low latency exception handling.

3.1.2.1 Level-Sensitive and Pulse Interrupts

The processor supports both level-sensitive and pulse interrupts. Pulse interrupts are also described as edge-triggered interrupts.

A level-sensitive interrupt is held asserted until the peripheral deasserts the interrupt signal. Typically this happens because the ISR accesses the peripheral, causing it to clear the interrupt request. A pulse interrupt is an interrupt signal sampled synchronously on the rising edge of the processor clock. To ensure the NVIC detects the interrupt, the peripheral must assert the interrupt signal for at least one clock cycle, during which the NVIC detects the pulse and latches the interrupt.

When the processor enters the ISR, it automatically removes the pending state from the interrupt (see “Hardware and Software Control of Interrupts” on page 93 for more information). For a level-sensitive interrupt, if the signal is not deasserted before the processor returns from the ISR, the interrupt becomes pending again, and the processor must execute its ISR again. As a result, the peripheral can hold the interrupt signal asserted until it no longer needs servicing.

3.1.2.2 Hardware and Software Control of Interrupts

The Cortex-M3 latches all interrupts. A peripheral interrupt becomes pending for one of the following reasons:

- The NVIC detects that the interrupt signal is High and the interrupt is not active.
- The NVIC detects a rising edge on the interrupt signal.
- Software writes to the corresponding interrupt set-pending register bit, or to the **Software Trigger Interrupt (SWTRIG)** register to make a Software-Generated Interrupt pending. See the `INT` bit in the **PEND0** register on page 110 or **SWTRIG** on page 118.

A pending interrupt remains pending until one of the following:

- The processor enters the ISR for the interrupt, changing the state of the interrupt from pending to active. Then:
  - For a level-sensitive interrupt, when the processor returns from the ISR, the NVIC samples the interrupt signal. If the signal is asserted, the state of the interrupt changes to pending, which might cause the processor to immediately re-enter the ISR. Otherwise, the state of the interrupt changes to inactive.
  - For a pulse interrupt, the NVIC continues to monitor the interrupt signal, and if this is pulsed the state of the interrupt changes to pending and active. In this case, when the processor returns from the ISR the state of the interrupt changes to pending, which might cause the processor to immediately re-enter the ISR.

    If the interrupt signal is not pulsed while the processor is in the ISR, when the processor returns from the ISR the state of the interrupt changes to inactive.
- Software writes to the corresponding interrupt clear-pending register bit
  - For a level-sensitive interrupt, if the interrupt signal is still asserted, the state of the interrupt does not change. Otherwise, the state of the interrupt changes to inactive.

– For a pulse interrupt, the state of the interrupt changes to inactive, if the state was pending or to active, if the state was active and pending.

3.1.3 System Control Block (SCB)

The System Control Block (SCB) provides system implementation information and system control, including configuration, control, and reporting of the system exceptions.

3.1.4 Memory Protection Unit (MPU)

This section describes the Memory protection unit (MPU). The MPU divides the memory map into a number of regions and defines the location, size, access permissions, and memory attributes of each region. The MPU supports independent attribute settings for each region, overlapping regions, and export of memory attributes to the system.

The memory attributes affect the behavior of memory accesses to the region. The Cortex-M3 MPU defines eight separate memory regions, 0-7, and a background region.

When memory regions overlap, a memory access is affected by the attributes of the region with the highest number. For example, the attributes for region 7 take precedence over the attributes of any region that overlaps region 7.

The background region has the same memory access attributes as the default memory map, but is accessible from privileged software only.

The Cortex-M3 MPU memory map is unified, meaning that instruction accesses and data accesses have the same region settings.

If a program accesses a memory location that is prohibited by the MPU, the processor generates a memory management fault, causing a fault exception and possibly causing termination of the process in an OS environment. In an OS environment, the kernel can update the MPU region setting dynamically based on the process to be executed. Typically, an embedded OS uses the MPU for memory protection.

Configuration of MPU regions is based on memory types (see “Memory Regions, Types and Attributes” on page 70 for more information).

Table 3-2 on page 94 shows the possible MPU region attributes. See the section called “MPU Configuration for a Stellaris Microcontroller” on page 98 for guidelines for programming a microcontroller implementation.

Table 3-2. Memory Attributes Summary

Memory Type	Description
Strongly Ordered	All accesses to Strongly Ordered memory occur in program order.
Device	Memory-mapped peripherals
Normal	Normal memory

To avoid unexpected behavior, disable the interrupts before updating the attributes of a region that the interrupt handlers might access.

Ensure software uses aligned accesses of the correct size to access MPU registers:

- Except for the **MPU Region Attribute and Size (MPUATTR)** register, all MPU registers must be accessed with aligned word accesses.
- The **MPUATTR** register can be accessed with byte or aligned halfword or word accesses.

The processor does not support unaligned accesses to MPU registers.

When setting up the MPU, and if the MPU has previously been programmed, disable unused regions to prevent any previous region settings from affecting the new MPU setup.

3.1.4.1 Updating an MPU Region

To update the attributes for an MPU region, the **MPU Region Number (MPUNUMBER)**, **MPU Region Base Address (MPUBASE)** and **MPUATTR** registers must be updated. Each register can be programmed separately or with a multiple-word write to program all of these registers. You can use the **MPUBASEx** and **MPUATTRx** aliases to program up to four regions simultaneously using an `STM` instruction.

Updating an MPU Region Using Separate Words

This example simple code configures one region:

```
; R1 = region number
; R2 = size/enable
; R3 = attributes
; R4 = address
LDR R0,=MPUNUMBER        ; 0xE000ED98, MPU region number register
STR R1, [R0, #0x0]       ; Region Number
STR R4, [R0, #0x4]       ; Region Base Address
STRH R2, [R0, #0x8]      ; Region Size and Enable
STRH R3, [R0, #0xA]      ; Region Attribute
```

Disable a region before writing new region settings to the MPU if you have previously enabled the region being changed. For example:

```
; R1 = region number
; R2 = size/enable
; R3 = attributes
; R4 = address
LDR R0,=MPUNUMBER         ; 0xE000ED98, MPU region number register
STR R1, [R0, #0x0]        ; Region Number
BIC R2, R2, #1            ; Disable
STRH R2, [R0, #0x8]       ; Region Size and Enable
STR R4, [R0, #0x4]        ; Region Base Address
STRH R3, [R0, #0xA]       ; Region Attribute
ORR R2, #1                ; Enable
STRH R2, [R0, #0x8]       ; Region Size and Enable
```

Software must use memory barrier instructions:

- Before MPU setup, if there might be outstanding memory transfers, such as buffered writes, that might be affected by the change in MPU settings.
- After MPU setup, if it includes memory transfers that must use the new MPU settings.

However, memory barrier instructions are not required if the MPU setup process starts by entering an exception handler, or is followed by an exception return, because the exception entry and exception return mechanism cause memory barrier behavior.

Software does not need any memory barrier instructions during MPU setup, because it accesses the MPU through the Private Peripheral Bus (PPB), which is a Strongly Ordered memory region.

For example, if all of the memory access behavior is intended to take effect immediately after the programming sequence, then a DSB instruction and an ISB instruction should be used. A DSB is required after changing MPU settings, such as at the end of context switch. An ISB is required if the code that programs the MPU region or regions is entered using a branch or call. If the programming sequence is entered using a return from exception, or by taking an exception, then an ISB is not required.

Updating an MPU Region Using Multi-Word Writes

The MPU can be programmed directly using multi-word writes, depending how the information is divided. Consider the following reprogramming:

```
; R1 = region number
; R2 = address
; R3 = size, attributes in one
LDR R0, =MPUNUMBER  ; 0xE000ED98, MPU region number register
STR R1, [R0, #0x0]  ; Region Number
STR R2, [R0, #0x4]  ; Region Base Address
STR R3, [R0, #0x8]  ; Region Attribute, Size and Enable
```

An STM instruction can be used to optimize this:

```
; R1 = region number
; R2 = address
; R3 = size, attributes in one
LDR R0, =MPUNUMBER  ; 0xE000ED98, MPU region number register
STM R0, {R1-R3}     ; Region number, address, attribute, size and enable
```

This operation can be done in two words for pre-packed information, meaning that the **MPU Region Base Address (MPUBASE)** register (see page 150) contains the required region number and has the VALID bit set. This method can be used when the data is statically packed, for example in a boot loader:

```
; R1 = address and region number in one
; R2 = size and attributes in one
LDR R0, =MPUBASE    ; 0xE000ED9C, MPU Region Base register
STR R1, [R0, #0x0]  ; Region base address and region number combined
                    ; with VALID (bit 4) set
STR R2, [R0, #0x4]  ; Region Attribute, Size and Enable
```

Subregions

Regions of 256 bytes or more are divided into eight equal-sized subregions. Set the corresponding bit in the SRD field of the **MPU Region Attribute and Size (MPUATTR)** register (see page 152) to disable a subregion. The least-significant bit of the SRD field controls the first subregion, and the most-significant bit controls the last subregion. Disabling a subregion means another region overlapping the disabled range matches instead. If no other enabled region overlaps the disabled subregion, the MPU issues a fault.

Regions of 32, 64, and 128 bytes do not support subregions. With regions of these sizes, the SRD field must be configured to 0x00, otherwise the MPU behavior is unpredictable.

Example of SRD Use

Two regions with the same base address overlap. Region one is 128 KB, and region two is 512 KB. To ensure the attributes from region one apply to the first 128 KB region, configure the SRD field for region two to 0x03 to disable the first two subregions, as Figure 3-1 on page 97 shows.

Figure 3-1. SRD Use Example

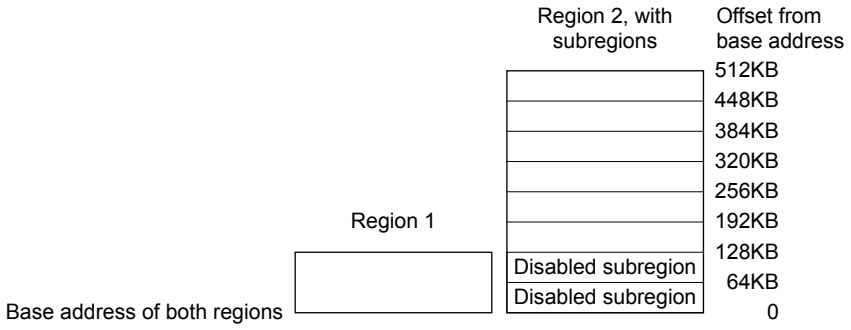

3.1.4.2 MPU Access Permission Attributes

The access permission bits, TEX, S, C, B, AP, and XN of the **MPUATTR** register, control access to the corresponding memory region. If an access is made to an area of memory without the required permissions, then the MPU generates a permission fault.

Table 3-3 on page 97 shows the encodings for the TEX, C, B, and S access permission bits. All encodings are shown for completeness, however the current implementation of the Cortex-M3 does not support the concept of cacheability or shareability. Refer to the section called "MPU Configuration for a Stellaris Microcontroller" on page 98 for information on programming the MPU for Stellaris implementations.

Table 3-3. TEX, S, C, and B Bit Field Encoding

TEX	S	C	B	Memory Type	Shareability	Other Attributes
000b	x[a]	0	0	Strongly Ordered	Shareable	-
000	x[a]	0	1	Device	Shareable	-
000	0	1	0	Normal	Not shareable	Outer and inner write-through. No write allocate.
000	1	1	0	Normal	Shareable	
000	0	1	1	Normal	Not shareable	
000	1	1	1	Normal	Shareable	
001	0	0	0	Normal	Not shareable	Outer and inner noncacheable.
001	1	0	0	Normal	Shareable	
001	x[a]	0	1	Reserved encoding	-	-
001	x[a]	1	0	Reserved encoding	-	-
001	0	1	1	Normal	Not shareable	Outer and inner write-back. Write and read allocate.
001	1	1	1	Normal	Shareable	
010	x[a]	0	0	Device	Not shareable	Nonshared Device.
010	x[a]	0	1	Reserved encoding	-	-
010	x[a]	1	x[a]	Reserved encoding	-	-

Table 3-3. TEX, S, C, and B Bit Field Encoding *(continued)*

TEX	S	C	B	Memory Type	Shareability	Other Attributes
1BB	0	A	A	Normal	Not shareable	Cached memory (BB = outer policy, AA = inner policy). See Table 3-4 for the encoding of the AA and BB bits.
1BB	1	A	A	Normal	Shareable	

a. The MPU ignores the value of this bit.

Table 3-4 on page 98 shows the cache policy for memory attribute encodings with a TEX value in the range of 0x4-0x7.

Table 3-4. Cache Policy for Memory Attribute Encoding

Encoding, AA or BB	Corresponding Cache Policy
00	Non-cacheable
01	Write back, write and read allocate
10	Write through, no write allocate
11	Write back, no write allocate

Table 3-5 on page 98 shows the AP encodings in the **MPUATTR** register that define the access permissions for privileged and unprivileged software.

Table 3-5. AP Bit Field Encoding

AP Bit Field	Privileged Permissions	Unprivileged Permissions	Description
000	No access	No access	All accesses generate a permission fault.
001	R/W	No access	Access from privileged software only.
010	R/W	RO	Writes by unprivileged software generate a permission fault.
011	R/W	R/W	Full access.
100	Unpredictable	Unpredictable	Reserved.
101	RO	No access	Reads by privileged software only.
110	RO	RO	Read-only, by privileged or unprivileged software.
111	RO	RO	Read-only, by privileged or unprivileged software.

MPU Configuration for a Stellaris Microcontroller

Stellaris microcontrollers have only a single processor and no caches. As a result, the MPU should be programmed as shown in Table 3-6 on page 98.

Table 3-6. Memory Region Attributes for Stellaris Microcontrollers

Memory Region	TEX	S	C	B	Memory Type and Attributes
Flash memory	000b	0	1	0	Normal memory, non-shareable, write-through
Internal SRAM	000b	1	1	0	Normal memory, shareable, write-through
External SRAM	000b	1	1	1	Normal memory, shareable, write-back, write-allocate
Peripherals	000b	1	0	1	Device memory, shareable

In current Stellaris microcontroller implementations, the shareability and cache policy attributes do not affect the system behavior. However, using these settings for the MPU regions can make the application code more portable. The values given are for typical situations.

3.1.4.3 MPU Mismatch

When an access violates the MPU permissions, the processor generates a memory management fault (see “Exceptions and Interrupts” on page 68 for more information). The **MFAULTSTAT** register indicates the cause of the fault. See page 137 for more information.

3.2 Register Map

Table 3-7 on page 99 lists the Cortex-M3 Peripheral SysTick, NVIC, MPU and SCB registers. The offset listed is a hexadecimal increment to the register's address, relative to the Core Peripherals base address of 0xE000.E000.

Note: Register spaces that are not used are reserved for future or internal use. Software should not modify any reserved memory address.

Table 3-7. Peripherals Register Map

Offset	Name	Type	Reset	Description	See page
System Timer (SysTick) Registers					
0x010	STCTRL	R/W	0x0000.0000	SysTick Control and Status Register	102
0x014	STRELOAD	R/W	0x0000.0000	SysTick Reload Value Register	104
0x018	STCURRENT	R/WC	0x0000.0000	SysTick Current Value Register	105
Nested Vectored Interrupt Controller (NVIC) Registers					
0x100	EN0	R/W	0x0000.0000	Interrupt 0-31 Set Enable	106
0x104	EN1	R/W	0x0000.0000	Interrupt 32-47 Set Enable	107
0x180	DIS0	R/W	0x0000.0000	Interrupt 0-31 Clear Enable	108
0x184	DIS1	R/W	0x0000.0000	Interrupt 32-47 Clear Enable	109
0x200	PEND0	R/W	0x0000.0000	Interrupt 0-31 Set Pending	110
0x204	PEND1	R/W	0x0000.0000	Interrupt 32-47 Set Pending	111
0x280	UNPEND0	R/W	0x0000.0000	Interrupt 0-31 Clear Pending	112
0x284	UNPEND1	R/W	0x0000.0000	Interrupt 32-47 Clear Pending	113
0x300	ACTIVE0	RO	0x0000.0000	Interrupt 0-31 Active Bit	114
0x304	ACTIVE1	RO	0x0000.0000	Interrupt 32-47 Active Bit	115
0x400	PRI0	R/W	0x0000.0000	Interrupt 0-3 Priority	116
0x404	PRI1	R/W	0x0000.0000	Interrupt 4-7 Priority	116
0x408	PRI2	R/W	0x0000.0000	Interrupt 8-11 Priority	116
0x40C	PRI3	R/W	0x0000.0000	Interrupt 12-15 Priority	116
0x410	PRI4	R/W	0x0000.0000	Interrupt 16-19 Priority	116

Table 3-7. Peripherals Register Map *(continued)*

Offset	Name	Type	Reset	Description	See page
0x414	PRI5	R/W	0x0000.0000	Interrupt 20-23 Priority	116
0x418	PRI6	R/W	0x0000.0000	Interrupt 24-27 Priority	116
0x41C	PRI7	R/W	0x0000.0000	Interrupt 28-31 Priority	116
0x420	PRI8	R/W	0x0000.0000	Interrupt 32-35 Priority	116
0x424	PRI9	R/W	0x0000.0000	Interrupt 36-39 Priority	116
0x428	PRI10	R/W	0x0000.0000	Interrupt 40-43 Priority	116
0x42C	PRI11	R/W	0x0000.0000	Interrupt 44-47 Priority	116
0xF00	SWTRIG	WO	0x0000.0000	Software Trigger Interrupt	118
System Control Block (SCB) Registers					
0xD00	CPUID	RO	0x411F.C231	CPU ID Base	119
0xD04	INTCTRL	R/W	0x0000.0000	Interrupt Control and State	120
0xD08	VTABLE	R/W	0x0000.0000	Vector Table Offset	123
0xD0C	APINT	R/W	0xFA05.0000	Application Interrupt and Reset Control	124
0xD10	SYSCTRL	R/W	0x0000.0000	System Control	126
0xD14	CFGCTRL	R/W	0x0000.0000	Configuration and Control	128
0xD18	SYSPRI1	R/W	0x0000.0000	System Handler Priority 1	130
0xD1C	SYSPRI2	R/W	0x0000.0000	System Handler Priority 2	131
0xD20	SYSPRI3	R/W	0x0000.0000	System Handler Priority 3	132
0xD24	SYSHNDCTRL	R/W	0x0000.0000	System Handler Control and State	133
0xD28	FAULTSTAT	R/W1C	0x0000.0000	Configurable Fault Status	137
0xD2C	HFAULTSTAT	R/W1C	0x0000.0000	Hard Fault Status	143
0xD34	MMADDR	R/W	-	Memory Management Fault Address	144
0xD38	FAULTADDR	R/W	-	Bus Fault Address	145
Memory Protection Unit (MPU) Registers					
0xD90	MPUTYPE	RO	0x0000.0800	MPU Type	146
0xD94	MPUCTRL	R/W	0x0000.0000	MPU Control	147
0xD98	MPUNUMBER	R/W	0x0000.0000	MPU Region Number	149
0xD9C	MPUBASE	R/W	0x0000.0000	MPU Region Base Address	150
0xDA0	MPUATTR	R/W	0x0000.0000	MPU Region Attribute and Size	152
0xDA4	MPUBASE1	R/W	0x0000.0000	MPU Region Base Address Alias 1	150
0xDA8	MPUATTR1	R/W	0x0000.0000	MPU Region Attribute and Size Alias 1	152
0xDAC	MPUBASE2	R/W	0x0000.0000	MPU Region Base Address Alias 2	150

Table 3-7. Peripherals Register Map *(continued)*

Offset	Name	Type	Reset	Description	See page
0xDB0	MPUATTR2	R/W	0x0000.0000	MPU Region Attribute and Size Alias 2	152
0xDB4	MPUBASE3	R/W	0x0000.0000	MPU Region Base Address Alias 3	150
0xDB8	MPUATTR3	R/W	0x0000.0000	MPU Region Attribute and Size Alias 3	152

3.3 System Timer (SysTick) Register Descriptions

This section lists and describes the System Timer registers, in numerical order by address offset.

Register 1: SysTick Control and Status Register (STCTRL), offset 0x010

Note: This register can only be accessed from privileged mode.

The SysTick **STCTRL** register enables the SysTick features.

SysTick Control and Status Register (STCTRL)

Base 0xE000.E000
Offset 0x010
Type R/W, reset 0x0000.0000

	31	30	29	28	27	26	25	24	23	22	21	20	19	18	17	16
	reserved															COUNT
Type	RO	RO	RO	RO	RO	RO	RO	RO	RO	RO	RO	RO	RO	RO	RO	RO
Reset	0	0	0	0	0	0	0	0	0	0	0	0	0	0	0	0

	15	14	13	12	11	10	9	8	7	6	5	4	3	2	1	0
	reserved													CLK_SRC	INTEN	ENABLE
Type	RO	RO	RO	RO	RO	RO	RO	RO	RO	RO	RO	RO	RO	R/W	R/W	R/W
Reset	0	0	0	0	0	0	0	0	0	0	0	0	0	0	0	0

Bit/Field	Name	Type	Reset	Description
31:17	reserved	RO	0x000	Software should not rely on the value of a reserved bit. To provide compatibility with future products, the value of a reserved bit should be preserved across a read-modify-write operation.
16	COUNT	RO	0	Count Flag Value — Description 0 — The SysTick timer has not counted to 0 since the last time this bit was read. 1 — The SysTick timer has counted to 0 since the last time this bit was read. This bit is cleared by a read of the register or if the **STCURRENT** register is written with any value. If read by the debugger using the DAP, this bit is cleared only if the `MasterType` bit in the **AHB-AP Control Register** is clear. Otherwise, the `COUNT` bit is not changed by the debugger read. See the *ARM® Debug Interface V5 Architecture Specification* for more information on `MasterType`.
15:3	reserved	RO	0x000	Software should not rely on the value of a reserved bit. To provide compatibility with future products, the value of a reserved bit should be preserved across a read-modify-write operation.
2	CLK_SRC	R/W	0	Clock Source Value — Description 0 — External reference clock. (Not implemented for most Stellaris microcontrollers.) 1 — System clock Because an external reference clock is not implemented, this bit must be set in order for SysTick to operate.

Bit/Field	Name	Type	Reset	Description
1	INTEN	R/W	0	Interrupt Enable Value — Description 0 — Interrupt generation is disabled. Software can use the `COUNT` bit to determine if the counter has ever reached 0. 1 — An interrupt is generated to the NVIC when SysTick counts to 0.
0	ENABLE	R/W	0	Enable Value — Description 0 — The counter is disabled. 1 — Enables SysTick to operate in a multi-shot way. That is, the counter loads the `RELOAD` value and begins counting down. On reaching 0, the `COUNT` bit is set and an interrupt is generated if enabled by `INTEN`. The counter then loads the `RELOAD` value again and begins counting.

Register 2: SysTick Reload Value Register (STRELOAD), offset 0x014

Note: This register can only be accessed from privileged mode.

The **STRELOAD** register specifies the start value to load into the **SysTick Current Value (STCURRENT)** register when the counter reaches 0. The start value can be between 0x1 and 0x00FF.FFFF. A start value of 0 is possible but has no effect because the SysTick interrupt and the `COUNT` bit are activated when counting from 1 to 0.

SysTick can be configured as a multi-shot timer, repeated over and over, firing every N+1 clock pulses, where N is any value from 1 to 0x00FF.FFFF. For example, if a tick interrupt is required every 100 clock pulses, 99 must be written into the `RELOAD` field.

SysTick Reload Value Register (STRELOAD)

Base 0xE000.E000
Offset 0x014
Type R/W, reset 0x0000.0000

	31	30	29	28	27	26	25	24	23	22	21	20	19	18	17	16
	reserved								RELOAD							
Type	RO	RO	RO	RO	RO	RO	RO	RO	R/W	R/W	R/W	R/W	R/W	R/W	R/W	R/W
Reset	0	0	0	0	0	0	0	0	0	0	0	0	0	0	0	0

	15	14	13	12	11	10	9	8	7	6	5	4	3	2	1	0
	RELOAD															
Type	R/W	R/W	R/W	R/W	R/W	R/W	R/W	R/W	R/W	R/W	R/W	R/W	R/W	R/W	R/W	R/W
Reset	0	0	0	0	0	0	0	0	0	0	0	0	0	0	0	0

Bit/Field	Name	Type	Reset	Description
31:24	reserved	RO	0x00	Software should not rely on the value of a reserved bit. To provide compatibility with future products, the value of a reserved bit should be preserved across a read-modify-write operation.
23:0	RELOAD	R/W	0x00.0000	Reload Value Value to load into the **SysTick Current Value (STCURRENT)** register when the counter reaches 0.

Register 3: SysTick Current Value Register (STCURRENT), offset 0x018

Note: This register can only be accessed from privileged mode.

The **STCURRENT** register contains the current value of the SysTick counter.

SysTick Current Value Register (STCURRENT)

Base 0xE000.E000
Offset 0x018
Type R/WC, reset 0x0000.0000

	31	30	29	28	27	26	25	24	23	22	21	20	19	18	17	16
	reserved								CURRENT							
Type	RO	RO	RO	RO	RO	RO	RO	RO	R/WC	R/WC	R/WC	R/WC	R/WC	R/WC	R/WC	R/WC
Reset	0	0	0	0	0	0	0	0	0	0	0	0	0	0	0	0

	15	14	13	12	11	10	9	8	7	6	5	4	3	2	1	0
	CURRENT															
Type	R/WC	R/WC	R/WC	R/WC	R/WC	R/WC	R/WC	R/WC	R/WC	R/WC	R/WC	R/WC	R/WC	R/WC	R/WC	R/WC
Reset	0	0	0	0	0	0	0	0	0	0	0	0	0	0	0	0

Bit/Field	Name	Type	Reset	Description
31:24	reserved	RO	0x00	Software should not rely on the value of a reserved bit. To provide compatibility with future products, the value of a reserved bit should be preserved across a read-modify-write operation.
23:0	CURRENT	R/WC	0x00.0000	Current Value This field contains the current value at the time the register is accessed. No read-modify-write protection is provided, so change with care. This register is write-clear. Writing to it with any value clears the register. Clearing this register also clears the `COUNT` bit of the **STCTRL** register.

3.4 NVIC Register Descriptions

This section lists and describes the NVIC registers, in numerical order by address offset.

The NVIC registers can only be fully accessed from privileged mode, but interrupts can be pended while in unprivileged mode by enabling the **Configuration and Control (CFGCTRL)** register. Any other unprivileged mode access causes a bus fault.

Ensure software uses correctly aligned register accesses. The processor does not support unaligned accesses to NVIC registers.

An interrupt can enter the pending state even if it is disabled.

Before programming the **VTABLE** register to relocate the vector table, ensure the vector table entries of the new vector table are set up for fault handlers, NMI, and all enabled exceptions such as interrupts. For more information, see page 123.

Register 4: Interrupt 0-31 Set Enable (EN0), offset 0x100

Note: This register can only be accessed from privileged mode.

The **EN0** register enables interrupts and shows which interrupts are enabled. Bit 0 corresponds to Interrupt 0; bit 31 corresponds to Interrupt 31.

See Table 2-9 on page 79 for interrupt assignments.

If a pending interrupt is enabled, the NVIC activates the interrupt based on its priority. If an interrupt is not enabled, asserting its interrupt signal changes the interrupt state to pending, but the NVIC never activates the interrupt, regardless of its priority.

Interrupt 0-31 Set Enable (EN0)

Base 0xE000.E000
Offset 0x100
Type R/W, reset 0x0000.0000

	31	30	29	28	27	26	25	24	23	22	21	20	19	18	17	16
	INT															
Type	R/W	R/W	R/W	R/W	R/W	R/W	R/W	R/W	R/W	R/W	R/W	R/W	R/W	R/W	R/W	R/W
Reset	0	0	0	0	0	0	0	0	0	0	0	0	0	0	0	0

	15	14	13	12	11	10	9	8	7	6	5	4	3	2	1	0
	INT															
Type	R/W	R/W	R/W	R/W	R/W	R/W	R/W	R/W	R/W	R/W	R/W	R/W	R/W	R/W	R/W	R/W
Reset	0	0	0	0	0	0	0	0	0	0	0	0	0	0	0	0

Bit/Field	Name	Type	Reset	Description
31:0	INT	R/W	0x0000.0000	Interrupt Enable

Value	Description
0	On a read, indicates the interrupt is disabled. On a write, no effect.
1	On a read, indicates the interrupt is enabled. On a write, enables the interrupt.

A bit can only be cleared by setting the corresponding `INT[n]` bit in the **DISn** register.

Register 5: Interrupt 32-47 Set Enable (EN1), offset 0x104

Note: This register can only be accessed from privileged mode.

The **EN1** register enables interrupts and shows which interrupts are enabled. Bit 0 corresponds to Interrupt 32; bit 15 corresponds to Interrupt 47. See Table 2-9 on page 79 for interrupt assignments.

If a pending interrupt is enabled, the NVIC activates the interrupt based on its priority. If an interrupt is not enabled, asserting its interrupt signal changes the interrupt state to pending, but the NVIC never activates the interrupt, regardless of its priority.

Interrupt 32-47 Set Enable (EN1)

Base 0xE000.E000
Offset 0x104
Type R/W, reset 0x0000.0000

	31	30	29	28	27	26	25	24	23	22	21	20	19	18	17	16
	reserved															
Type	RO	RO	RO	RO	RO	RO	RO	RO	RO	RO	RO	RO	RO	RO	RO	RO
Reset	0	0	0	0	0	0	0	0	0	0	0	0	0	0	0	0

	15	14	13	12	11	10	9	8	7	6	5	4	3	2	1	0
	INT															
Type	R/W	R/W	R/W	R/W	R/W	R/W	R/W	R/W	R/W	R/W	R/W	R/W	R/W	R/W	R/W	R/W
Reset	0	0	0	0	0	0	0	0	0	0	0	0	0	0	0	0

Bit/Field	Name	Type	Reset	Description
31:16	reserved	RO	0x000	Software should not rely on the value of a reserved bit. To provide compatibility with future products, the value of a reserved bit should be preserved across a read-modify-write operation.
15:0	INT	R/W	0x0.0000	Interrupt Enable

Value	Description
0	On a read, indicates the interrupt is disabled. On a write, no effect.
1	On a read, indicates the interrupt is enabled. On a write, enables the interrupt.

A bit can only be cleared by setting the corresponding `INT[n]` bit in the **DIS1** register.

Register 6: Interrupt 0-31 Clear Enable (DIS0), offset 0x180

Note: This register can only be accessed from privileged mode.

The **DIS0** register disables interrupts. Bit 0 corresponds to Interrupt 0; bit 31 corresponds to Interrupt 31.

See Table 2-9 on page 79 for interrupt assignments.

Interrupt 0-31 Clear Enable (DIS0)

Base 0xE000.E000
Offset 0x180
Type R/W, reset 0x0000.0000

	31	30	29	28	27	26	25	24	23	22	21	20	19	18	17	16
	INT															
Type	R/W	R/W	R/W	R/W	R/W	R/W	R/W	R/W	R/W	R/W	R/W	R/W	R/W	R/W	R/W	R/W
Reset	0	0	0	0	0	0	0	0	0	0	0	0	0	0	0	0

	15	14	13	12	11	10	9	8	7	6	5	4	3	2	1	0
	INT															
Type	R/W	R/W	R/W	R/W	R/W	R/W	R/W	R/W	R/W	R/W	R/W	R/W	R/W	R/W	R/W	R/W
Reset	0	0	0	0	0	0	0	0	0	0	0	0	0	0	0	0

Bit/Field	Name	Type	Reset	Description
31:0	INT	R/W	0x0000.0000	Interrupt Disable

Value	Description
0	On a read, indicates the interrupt is disabled. On a write, no effect.
1	On a read, indicates the interrupt is enabled. On a write, clears the corresponding `INT[n]` bit in the **EN0** register, disabling interrupt [n].

Register 7: Interrupt 32-47 Clear Enable (DIS1), offset 0x184

Note: This register can only be accessed from privileged mode.

The **DIS1** register disables interrupts. Bit 0 corresponds to Interrupt 32; bit 15 corresponds to Interrupt 47. See Table 2-9 on page 79 for interrupt assignments.

Interrupt 32-47 Clear Enable (DIS1)

Base 0xE000.E000
Offset 0x184
Type R/W, reset 0x0000.0000

	31	30	29	28	27	26	25	24	23	22	21	20	19	18	17	16
	reserved															
Type	RO	RO	RO	RO	RO	RO	RO	RO	RO	RO	RO	RO	RO	RO	RO	RO
Reset	0	0	0	0	0	0	0	0	0	0	0	0	0	0	0	0

	15	14	13	12	11	10	9	8	7	6	5	4	3	2	1	0
	INT															
Type	R/W	R/W	R/W	R/W	R/W	R/W	R/W	R/W	R/W	R/W	R/W	R/W	R/W	R/W	R/W	R/W
Reset	0	0	0	0	0	0	0	0	0	0	0	0	0	0	0	0

Bit/Field	Name	Type	Reset	Description
31:16	reserved	RO	0x000	Software should not rely on the value of a reserved bit. To provide compatibility with future products, the value of a reserved bit should be preserved across a read-modify-write operation.
15:0	INT	R/W	0x0.0000	Interrupt Disable

Value	Description
0	On a read, indicates the interrupt is disabled. On a write, no effect.
1	On a read, indicates the interrupt is enabled. On a write, clears the corresponding `INT[n]` bit in the **EN1** register, disabling interrupt [n].

Register 8: Interrupt 0-31 Set Pending (PEND0), offset 0x200

Note: This register can only be accessed from privileged mode.

The **PEND0** register forces interrupts into the pending state and shows which interrupts are pending. Bit 0 corresponds to Interrupt 0; bit 31 corresponds to Interrupt 31.

See Table 2-9 on page 79 for interrupt assignments.

Interrupt 0-31 Set Pending (PEND0)

Base 0xE000.E000
Offset 0x200
Type R/W, reset 0x0000.0000

	31	30	29	28	27	26	25	24	23	22	21	20	19	18	17	16
	INT															
Type	R/W	R/W	R/W	R/W	R/W	R/W	R/W	R/W	R/W	R/W	R/W	R/W	R/W	R/W	R/W	R/W
Reset	0	0	0	0	0	0	0	0	0	0	0	0	0	0	0	0

	15	14	13	12	11	10	9	8	7	6	5	4	3	2	1	0
	INT															
Type	R/W	R/W	R/W	R/W	R/W	R/W	R/W	R/W	R/W	R/W	R/W	R/W	R/W	R/W	R/W	R/W
Reset	0	0	0	0	0	0	0	0	0	0	0	0	0	0	0	0

Bit/Field	Name	Type	Reset	Description
31:0	INT	R/W	0x0000.0000	Interrupt Set Pending

Value	Description
0	On a read, indicates that the interrupt is not pending. On a write, no effect.
1	On a read, indicates that the interrupt is pending. On a write, the corresponding interrupt is set to pending even if it is disabled.

If the corresponding interrupt is already pending, setting a bit has no effect.

A bit can only be cleared by setting the corresponding `INT[n]` bit in the **UNPEND0** register.

Register 9: Interrupt 32-47 Set Pending (PEND1), offset 0x204

Note: This register can only be accessed from privileged mode.

The **PEND1** register forces interrupts into the pending state and shows which interrupts are pending. Bit 0 corresponds to Interrupt 32; bit 15 corresponds to Interrupt 47. See Table 2-9 on page 79 for interrupt assignments.

Interrupt 32-47 Set Pending (PEND1)

Base 0xE000.E000
Offset 0x204
Type R/W, reset 0x0000.0000

	31	30	29	28	27	26	25	24	23	22	21	20	19	18	17	16
	reserved															
Type	RO	RO	RO	RO	RO	RO	RO	RO	RO	RO	RO	RO	RO	RO	RO	RO
Reset	0	0	0	0	0	0	0	0	0	0	0	0	0	0	0	0

	15	14	13	12	11	10	9	8	7	6	5	4	3	2	1	0
	INT															
Type	R/W	R/W	R/W	R/W	R/W	R/W	R/W	R/W	R/W	R/W	R/W	R/W	R/W	R/W	R/W	R/W
Reset	0	0	0	0	0	0	0	0	0	0	0	0	0	0	0	0

Bit/Field	Name	Type	Reset	Description
31:16	reserved	RO	0x000	Software should not rely on the value of a reserved bit. To provide compatibility with future products, the value of a reserved bit should be preserved across a read-modify-write operation.
15:0	INT	R/W	0x0.0000	Interrupt Set Pending

Value	Description
0	On a read, indicates that the interrupt is not pending. On a write, no effect.
1	On a read, indicates that the interrupt is pending. On a write, the corresponding interrupt is set to pending even if it is disabled.

If the corresponding interrupt is already pending, setting a bit has no effect.

A bit can only be cleared by setting the corresponding `INT[n]` bit in the **UNPEND1** register.

Register 10: Interrupt 0-31 Clear Pending (UNPEND0), offset 0x280

Note: This register can only be accessed from privileged mode.

The **UNPEND0** register shows which interrupts are pending and removes the pending state from interrupts. Bit 0 corresponds to Interrupt 0; bit 31 corresponds to Interrupt 31.

See Table 2-9 on page 79 for interrupt assignments.

Interrupt 0-31 Clear Pending (UNPEND0)

Base 0xE000.E000
Offset 0x280
Type R/W, reset 0x0000.0000

	31	30	29	28	27	26	25	24	23	22	21	20	19	18	17	16
	INT															
Type	R/W	R/W	R/W	R/W	R/W	R/W	R/W	R/W	R/W	R/W	R/W	R/W	R/W	R/W	R/W	R/W
Reset	0	0	0	0	0	0	0	0	0	0	0	0	0	0	0	0

	15	14	13	12	11	10	9	8	7	6	5	4	3	2	1	0
	INT															
Type	R/W	R/W	R/W	R/W	R/W	R/W	R/W	R/W	R/W	R/W	R/W	R/W	R/W	R/W	R/W	R/W
Reset	0	0	0	0	0	0	0	0	0	0	0	0	0	0	0	0

Bit/Field	Name	Type	Reset	Description
31:0	INT	R/W	0x0000.0000	Interrupt Clear Pending

Value	Description
0	On a read, indicates that the interrupt is not pending. On a write, no effect.
1	On a read, indicates that the interrupt is pending. On a write, clears the corresponding `INT[n]` bit in the **PEND0** register, so that interrupt [n] is no longer pending. Setting a bit does not affect the active state of the corresponding interrupt.

Register 11: Interrupt 32-47 Clear Pending (UNPEND1), offset 0x284

Note: This register can only be accessed from privileged mode.

The **UNPEND1** register shows which interrupts are pending and removes the pending state from interrupts. Bit 0 corresponds to Interrupt 32; bit 15 corresponds to Interrupt 47. See Table 2-9 on page 79 for interrupt assignments.

Interrupt 32-47 Clear Pending (UNPEND1)

Base 0xE000.E000
Offset 0x284
Type R/W, reset 0x0000.0000

	31	30	29	28	27	26	25	24	23	22	21	20	19	18	17	16
	reserved															
Type	RO	RO	RO	RO	RO	RO	RO	RO	RO	RO	RO	RO	RO	RO	RO	RO
Reset	0	0	0	0	0	0	0	0	0	0	0	0	0	0	0	0

	15	14	13	12	11	10	9	8	7	6	5	4	3	2	1	0
	INT															
Type	R/W	R/W	R/W	R/W	R/W	R/W	R/W	R/W	R/W	R/W	R/W	R/W	R/W	R/W	R/W	R/W
Reset	0	0	0	0	0	0	0	0	0	0	0	0	0	0	0	0

Bit/Field	Name	Type	Reset	Description
31:16	reserved	RO	0x000	Software should not rely on the value of a reserved bit. To provide compatibility with future products, the value of a reserved bit should be preserved across a read-modify-write operation.
15:0	INT	R/W	0x0.0000	Interrupt Clear Pending

Value	Description
0	On a read, indicates that the interrupt is not pending. On a write, no effect.
1	On a read, indicates that the interrupt is pending. On a write, clears the corresponding `INT[n]` bit in the **PEND1** register, so that interrupt [n] is no longer pending. Setting a bit does not affect the active state of the corresponding interrupt.

Register 12: Interrupt 0-31 Active Bit (ACTIVE0), offset 0x300

Note: This register can only be accessed from privileged mode.

The **ACTIVE0** register indicates which interrupts are active. Bit 0 corresponds to Interrupt 0; bit 31 corresponds to Interrupt 31.

See Table 2-9 on page 79 for interrupt assignments.

Caution – Do not manually set or clear the bits in this register.

Interrupt 0-31 Active Bit (ACTIVE0)

Base 0xE000.E000
Offset 0x300
Type RO, reset 0x0000.0000

	31	30	29	28	27	26	25	24	23	22	21	20	19	18	17	16
	INT															
Type	RO	RO	RO	RO	RO	RO	RO	RO	RO	RO	RO	RO	RO	RO	RO	RO
Reset	0	0	0	0	0	0	0	0	0	0	0	0	0	0	0	0

	15	14	13	12	11	10	9	8	7	6	5	4	3	2	1	0
	INT															
Type	RO	RO	RO	RO	RO	RO	RO	RO	RO	RO	RO	RO	RO	RO	RO	RO
Reset	0	0	0	0	0	0	0	0	0	0	0	0	0	0	0	0

Bit/Field	Name	Type	Reset	Description
31:0	INT	RO	0x0000.0000	Interrupt Active

Value	Description
0	The corresponding interrupt is not active.
1	The corresponding interrupt is active, or active and pending.

Register 13: Interrupt 32-47 Active Bit (ACTIVE1), offset 0x304

Note: This register can only be accessed from privileged mode.

The **ACTIVE1** register indicates which interrupts are active. Bit 0 corresponds to Interrupt 32; bit 15 corresponds to Interrupt 47. See Table 2-9 on page 79 for interrupt assignments.

Caution – Do not manually set or clear the bits in this register.

Interrupt 32-47 Active Bit (ACTIVE1)

Base 0xE000.E000
Offset 0x304
Type RO, reset 0x0000.0000

	31	30	29	28	27	26	25	24	23	22	21	20	19	18	17	16
	reserved															
Type	RO	RO	RO	RO	RO	RO	RO	RO	RO	RO	RO	RO	RO	RO	RO	RO
Reset	0	0	0	0	0	0	0	0	0	0	0	0	0	0	0	0

	15	14	13	12	11	10	9	8	7	6	5	4	3	2	1	0
	INT															
Type	RO	RO	RO	RO	RO	RO	RO	RO	RO	RO	RO	RO	RO	RO	RO	RO
Reset	0	0	0	0	0	0	0	0	0	0	0	0	0	0	0	0

Bit/Field	Name	Type	Reset	Description
31:16	reserved	RO	0x000	Software should not rely on the value of a reserved bit. To provide compatibility with future products, the value of a reserved bit should be preserved across a read-modify-write operation.
15:0	INT	RO	0x0.0000	Interrupt Active Value Description 0 The corresponding interrupt is not active. 1 The corresponding interrupt is active, or active and pending.

Register 14: Interrupt 0-3 Priority (PRI0), offset 0x400

Register 15: Interrupt 4-7 Priority (PRI1), offset 0x404

Register 16: Interrupt 8-11 Priority (PRI2), offset 0x408

Register 17: Interrupt 12-15 Priority (PRI3), offset 0x40C

Register 18: Interrupt 16-19 Priority (PRI4), offset 0x410

Register 19: Interrupt 20-23 Priority (PRI5), offset 0x414

Register 20: Interrupt 24-27 Priority (PRI6), offset 0x418

Register 21: Interrupt 28-31 Priority (PRI7), offset 0x41C

Register 22: Interrupt 32-35 Priority (PRI8), offset 0x420

Register 23: Interrupt 36-39 Priority (PRI9), offset 0x424

Register 24: Interrupt 40-43 Priority (PRI10), offset 0x428

Register 25: Interrupt 44-47 Priority (PRI11), offset 0x42C

Note: This register can only be accessed from privileged mode.

The **PRIn** registers provide 3-bit priority fields for each interrupt. These registers are byte accessible. Each register holds four priority fields that are assigned to interrupts as follows:

PRIn Register Bit Field	Interrupt
Bits 31:29	Interrupt [4n+3]
Bits 23:21	Interrupt [4n+2]
Bits 15:13	Interrupt [4n+1]
Bits 7:5	Interrupt [4n]

See Table 2-9 on page 79 for interrupt assignments.

Each priority level can be split into separate group priority and subpriority fields. The `PRIGROUP` field in the **Application Interrupt and Reset Control (APINT)** register (see page 124) indicates the position of the binary point that splits the priority and subpriority fields.

These registers can only be accessed from privileged mode.

Interrupt 0-3 Priority (PRI0)

Base 0xE000.E000
Offset 0x400
Type R/W, reset 0x0000.0000

	31	30	29	28	27	26	25	24	23	22	21	20	19	18	17	16
	INTD			reserved					INTC			reserved				
Type	R/W	R/W	R/W	RO	RO	RO	RO	RO	R/W	R/W	R/W	RO	RO	RO	RO	RO
Reset	0	0	0	0	0	0	0	0	0	0	0	0	0	0	0	0

	15	14	13	12	11	10	9	8	7	6	5	4	3	2	1	0
	INTB			reserved					INTA			reserved				
Type	R/W	R/W	R/W	RO	RO	RO	RO	RO	R/W	R/W	R/W	RO	RO	RO	RO	RO
Reset	0	0	0	0	0	0	0	0	0	0	0	0	0	0	0	0

Bit/Field	Name	Type	Reset	Description
31:29	INTD	R/W	0x0	Interrupt Priority for Interrupt [4n+3] This field holds a priority value, 0-7, for the interrupt with the number [4n+3], where n is the number of the **Interrupt Priority** register (n=0 for **PRI0**, and so on). The lower the value, the greater the priority of the corresponding interrupt.
28:24	reserved	RO	0x0	Software should not rely on the value of a reserved bit. To provide compatibility with future products, the value of a reserved bit should be preserved across a read-modify-write operation.
23:21	INTC	R/W	0x0	Interrupt Priority for Interrupt [4n+2] This field holds a priority value, 0-7, for the interrupt with the number [4n+2], where n is the number of the **Interrupt Priority** register (n=0 for **PRI0**, and so on). The lower the value, the greater the priority of the corresponding interrupt.
20:16	reserved	RO	0x0	Software should not rely on the value of a reserved bit. To provide compatibility with future products, the value of a reserved bit should be preserved across a read-modify-write operation.
15:13	INTB	R/W	0x0	Interrupt Priority for Interrupt [4n+1] This field holds a priority value, 0-7, for the interrupt with the number [4n+1], where n is the number of the **Interrupt Priority** register (n=0 for **PRI0**, and so on). The lower the value, the greater the priority of the corresponding interrupt.
12:8	reserved	RO	0x0	Software should not rely on the value of a reserved bit. To provide compatibility with future products, the value of a reserved bit should be preserved across a read-modify-write operation.
7:5	INTA	R/W	0x0	Interrupt Priority for Interrupt [4n] This field holds a priority value, 0-7, for the interrupt with the number [4n], where n is the number of the **Interrupt Priority** register (n=0 for **PRI0**, and so on). The lower the value, the greater the priority of the corresponding interrupt.
4:0	reserved	RO	0x0	Software should not rely on the value of a reserved bit. To provide compatibility with future products, the value of a reserved bit should be preserved across a read-modify-write operation.

Register 26: Software Trigger Interrupt (SWTRIG), offset 0xF00

Note: Only privileged software can enable unprivileged access to the **SWTRIG** register.

Writing an interrupt number to the **SWTRIG** register generates a Software Generated Interrupt (SGI). See Table 2-9 on page 79 for interrupt assignments.

When the `MAINPEND` bit in the **Configuration and Control (CFGCTRL)** register (see page 128) is set, unprivileged software can access the **SWTRIG** register.

Software Trigger Interrupt (SWTRIG)

Base 0xE000.E000
Offset 0xF00
Type WO, reset 0x0000.0000

	31	30	29	28	27	26	25	24	23	22	21	20	19	18	17	16
	reserved															
Type	RO	RO	RO	RO	RO	RO	RO	RO	RO	RO	RO	RO	RO	RO	RO	RO
Reset	0	0	0	0	0	0	0	0	0	0	0	0	0	0	0	0

	15	14	13	12	11	10	9	8	7	6	5	4	3	2	1	0
	reserved										INTID					
Type	RO	RO	RO	RO	RO	RO	RO	RO	RO	RO	WO	WO	WO	WO	WO	WO
Reset	0	0	0	0	0	0	0	0	0	0	0	0	0	0	0	0

Bit/Field	Name	Type	Reset	Description
31:6	reserved	RO	0x0000.00	Software should not rely on the value of a reserved bit. To provide compatibility with future products, the value of a reserved bit should be preserved across a read-modify-write operation.
5:0	INTID	WO	0x00	Interrupt ID This field holds the interrupt ID of the required SGI. For example, a value of 0x3 generates an interrupt on IRQ3.

3.5 System Control Block (SCB) Register Descriptions

This section lists and describes the System Control Block (SCB) registers, in numerical order by address offset. The SCB registers can only be accessed from privileged mode.

All registers must be accessed with aligned word accesses except for the **FAULTSTAT** and **SYSPRI1**-**SYSPRI3** registers, which can be accessed with byte or aligned halfword or word accesses. The processor does not support unaligned accesses to system control block registers.

Register 27: CPU ID Base (CPUID), offset 0xD00

Note: This register can only be accessed from privileged mode.

The **CPUID** register contains the ARM® Cortex™-M3 processor part number, version, and implementation information.

CPU ID Base (CPUID)

Base 0xE000.E000
Offset 0xD00
Type RO, reset 0x411F.C231

	31	30	29	28	27	26	25	24	23	22	21	20	19	18	17	16
	IMP								VAR				CON			
Type	RO	RO	RO	RO	RO	RO	RO	RO	RO	RO	RO	RO	RO	RO	RO	RO
Reset	0	1	0	0	0	0	0	1	0	0	0	1	1	1	1	1

	15	14	13	12	11	10	9	8	7	6	5	4	3	2	1	0
	PARTNO												REV			
Type	RO	RO	RO	RO	RO	RO	RO	RO	RO	RO	RO	RO	RO	RO	RO	RO
Reset	1	1	0	0	0	0	1	0	0	0	1	1	0	0	0	1

Bit/Field	Name	Type	Reset	Description
31:24	IMP	RO	0x41	Implementer Code Value Description 0x41 ARM
23:20	VAR	RO	0x1	Variant Number Value Description 0x1 The rn value in the rnpn product revision identifier, for example, the 1 in r1p1.
19:16	CON	RO	0xF	Constant Value Description 0xF Always reads as 0xF.
15:4	PARTNO	RO	0xC23	Part Number Value Description 0xC23 Cortex-M3 processor.
3:0	REV	RO	0x1	Revision Number Value Description 0x1 The pn value in the rnpn product revision identifier, for example, the 1 in r1p1.

Register 28: Interrupt Control and State (INTCTRL), offset 0xD04

Note: This register can only be accessed from privileged mode.

The **INCTRL** register provides a set-pending bit for the NMI exception, and set-pending and clear-pending bits for the PendSV and SysTick exceptions. In addition, bits in this register indicate the exception number of the exception being processed, whether there are preempted active exceptions, the exception number of the highest priority pending exception, and whether any interrupts are pending.

When writing to **INCTRL**, the effect is unpredictable when writing a 1 to both the `PENDSV` and `UNPENDSV` bits, or writing a 1 to both the `PENDSTSET` and `PENDSTCLR` bits.

Interrupt Control and State (INTCTRL)

Base 0xE000.E000
Offset 0xD04
Type R/W, reset 0x0000.0000

	31	30	29	28	27	26	25	24	23	22	21	20	19	18	17	16
	NMISET	reserved		PENDSV	UNPENDSV	PENDSTSET	PENDSTCLR	reserved	ISRPRE	ISRPEND	reserved			VECPEND		
Type	R/W	RO	RO	R/W	WO	R/W	WO	RO	RO	RO	RO	RO	RO	RO	RO	RO
Reset	0	0	0	0	0	0	0	0	0	0	0	0	0	0	0	0

	15	14	13	12	11	10	9	8	7	6	5	4	3	2	1	0
	VECPEND				RETBASE	reserved				VECACT						
Type	RO	RO	RO	RO	RO	RO	RO	RO	RO	RO	RO	RO	RO	RO	RO	RO
Reset	0	0	0	0	0	0	0	0	0	0	0	0	0	0	0	0

Bit/Field	Name	Type	Reset	Description
31	NMISET	R/W	0	NMI Set Pending Value Description 0 On a read, indicates an NMI exception is not pending. On a write, no effect. 1 On a read, indicates an NMI exception is pending. On a write, changes the NMI exception state to pending. Because NMI is the highest-priority exception, normally the processor enters the NMI exception handler as soon as it registers the setting of this bit, and clears this bit on entering the interrupt handler. A read of this bit by the NMI exception handler returns 1 only if the `NMI` signal is reasserted while the processor is executing that handler.
30:29	reserved	RO	0x0	Software should not rely on the value of a reserved bit. To provide compatibility with future products, the value of a reserved bit should be preserved across a read-modify-write operation.
28	PENDSV	R/W	0	PendSV Set Pending Value Description 0 On a read, indicates a PendSV exception is not pending. On a write, no effect. 1 On a read, indicates a PendSV exception is pending. On a write, changes the PendSV exception state to pending. Setting this bit is the only way to set the PendSV exception state to pending. This bit is cleared by writing a 1 to the `UNPENDSV` bit.

Bit/Field	Name	Type	Reset	Description
27	UNPENDSV	WO	0	PendSV Clear Pending Value Description 0 On a write, no effect. 1 On a write, removes the pending state from the PendSV exception. This bit is write only; on a register read, its value is unknown.
26	PENDSTSET	R/W	0	SysTick Set Pending Value Description 0 On a read, indicates a SysTick exception is not pending. On a write, no effect. 1 On a read, indicates a SysTick exception is pending. On a write, changes the SysTick exception state to pending. This bit is cleared by writing a 1 to the `PENDSTCLR` bit.
25	PENDSTCLR	WO	0	SysTick Clear Pending Value Description 0 On a write, no effect. 1 On a write, removes the pending state from the SysTick exception. This bit is write only; on a register read, its value is unknown.
24	reserved	RO	0	Software should not rely on the value of a reserved bit. To provide compatibility with future products, the value of a reserved bit should be preserved across a read-modify-write operation.
23	ISRPRE	RO	0	Debug Interrupt Handling Value Description 0 The release from halt does not take an interrupt. 1 The release from halt takes an interrupt. This bit is only meaningful in Debug mode and reads as zero when the processor is not in Debug mode.
22	ISRPEND	RO	0	Interrupt Pending Value Description 0 No interrupt is pending. 1 An interrupt is pending. This bit provides status for all interrupts excluding NMI and Faults.
21:19	reserved	RO	0x0	Software should not rely on the value of a reserved bit. To provide compatibility with future products, the value of a reserved bit should be preserved across a read-modify-write operation.

Bit/Field	Name	Type	Reset	Description
18:12	VECPEND	RO	0x00	Interrupt Pending Vector Number This field contains the exception number of the highest priority pending enabled exception. The value indicated by this field includes the effect of the **BASEPRI** and **FAULTMASK** registers, but not any effect of the **PRIMASK** register. Value — Description 0x00 — No exceptions are pending 0x01 — Reserved 0x02 — NMI 0x03 — Hard fault 0x04 — Memory management fault 0x05 — Bus fault 0x06 — Usage fault 0x07-0x0A — Reserved 0x0B — SVCall 0x0C — Reserved for Debug 0x0D — Reserved 0x0E — PendSV 0x0F — SysTick 0x10 — Interrupt Vector 0 0x11 — Interrupt Vector 1 ... — ... 0x3F — Interrupt Vector 47 0x40-0x7F — Reserved
11	RETBASE	RO	0	Return to Base Value — Description 0 — There are preempted active exceptions to execute. 1 — There are no active exceptions, or the currently executing exception is the only active exception. This bit provides status for all interrupts excluding NMI and Faults. This bit only has meaning if the processor is currently executing an ISR (the **Interrupt Program Status (IPSR)** register is non-zero).
10:7	reserved	RO	0x0	Software should not rely on the value of a reserved bit. To provide compatibility with future products, the value of a reserved bit should be preserved across a read-modify-write operation.
6:0	VECACT	RO	0x00	Interrupt Pending Vector Number This field contains the active exception number. The exception numbers can be found in the description for the `VECPEND` field. If this field is clear, the processor is in Thread mode. This field contains the same value as the `ISRNUM` field in the **IPSR** register. Subtract 16 from this value to obtain the IRQ number required to index into the **Interrupt Set Enable (ENn)**, **Interrupt Clear Enable (DISn)**, **Interrupt Set Pending (PENDn)**, **Interrupt Clear Pending (UNPENDn)**, and **Interrupt Priority (PRIn)** registers (see page 60).

Register 29: Vector Table Offset (VTABLE), offset 0xD08

Note: This register can only be accessed from privileged mode.

The **VTABLE** register indicates the offset of the vector table base address from memory address 0x0000.0000.

Vector Table Offset (VTABLE)

Base 0xE000.E000
Offset 0xD08
Type R/W, reset 0x0000.0000

	31	30	29	28	27	26	25	24	23	22	21	20	19	18	17	16
	reserved		BASE	OFFSET												
Type	RO	RO	R/W	R/W	R/W	R/W	R/W	R/W	R/W	R/W	R/W	R/W	R/W	R/W	R/W	R/W
Reset	0	0	0	0	0	0	0	0	0	0	0	0	0	0	0	0

	15	14	13	12	11	10	9	8	7	6	5	4	3	2	1	0
	OFFSET								reserved							
Type	R/W	R/W	R/W	R/W	R/W	R/W	R/W	R/W	RO	RO	RO	RO	RO	RO	RO	RO
Reset	0	0	0	0	0	0	0	0	0	0	0	0	0	0	0	0

Bit/Field	Name	Type	Reset	Description
31:30	reserved	RO	0x0	Software should not rely on the value of a reserved bit. To provide compatibility with future products, the value of a reserved bit should be preserved across a read-modify-write operation.
29	BASE	R/W	0	Vector Table Base Value Description 0 The vector table is in the code memory region. 1 The vector table is in the SRAM memory region.
28:8	OFFSET	R/W	0x000.00	Vector Table Offset When configuring the `OFFSET` field, the offset must be aligned to the number of exception entries in the vector table. Because there are 47 interrupts, the offset must be aligned on a 256-byte boundary.
7:0	reserved	RO	0x00	Software should not rely on the value of a reserved bit. To provide compatibility with future products, the value of a reserved bit should be preserved across a read-modify-write operation.

Register 30: Application Interrupt and Reset Control (APINT), offset 0xD0C

Note: This register can only be accessed from privileged mode.

The **APINT** register provides priority grouping control for the exception model, endian status for data accesses, and reset control of the system. To write to this register, 0x05FA must be written to the `VECTKEY` field, otherwise the write is ignored.

The `PRIGROUP` field indicates the position of the binary point that splits the `INTx` fields in the **Interrupt Priority (PRIx)** registers into separate group priority and subpriority fields. Table 3-8 on page 124 shows how the `PRIGROUP` value controls this split. The bit numbers in the Group Priority Field and Subpriority Field columns in the table refer to the bits in the `INTA` field. For the `INTB` field, the corresponding bits are 15:13; for `INTC`, 23:21; and for `INTD`, 31:29.

Note: Determining preemption of an exception uses only the group priority field.

Table 3-8. Interrupt Priority Levels

`PRIGROUP` Bit Field	Binary Point[a]	Group Priority Field	Subpriority Field	Group Priorities	Subpriorities
0x0 - 0x4	bxxx.	[7:5]	None	8	1
0x5	bxx.y	[7:6]	[5]	4	2
0x6	bx.yy	[7]	[6:5]	2	4
0x7	b.yyy	None	[7:5]	1	8

a. `INTx` field showing the binary point. An x denotes a group priority field bit, and a y denotes a subpriority field bit.

Application Interrupt and Reset Control (APINT)

Base 0xE000.E000
Offset 0xD0C
Type R/W, reset 0xFA05.0000

	31	30	29	28	27	26	25	24	23	22	21	20	19	18	17	16
	VECTKEY															
Type	R/W	R/W	R/W	R/W	R/W	R/W	R/W	R/W	R/W	R/W	R/W	R/W	R/W	R/W	R/W	R/W
Reset	1	1	1	1	1	0	1	0	0	0	0	0	0	1	0	1

	15	14	13	12	11	10	9	8	7	6	5	4	3	2	1	0
	ENDIANESS	reserved				PRIGROUP			reserved					SYSRESREQ	VECTCLRACT	VECTRESET
Type	RO	RO	RO	RO	RO	R/W	R/W	R/W	RO	RO	RO	RO	RO	WO	WO	WO
Reset	0	0	0	0	0	0	0	0	0	0	0	0	0	0	0	0

Bit/Field	Name	Type	Reset	Description
31:16	VECTKEY	R/W	0xFA05	Register Key This field is used to guard against accidental writes to this register. 0x05FA must be written to this field in order to change the bits in this register. On a read, 0xFA05 is returned.
15	ENDIANESS	RO	0	Data Endianess The Stellaris implementation uses only little-endian mode so this is cleared to 0.
14:11	reserved	RO	0x0	Software should not rely on the value of a reserved bit. To provide compatibility with future products, the value of a reserved bit should be preserved across a read-modify-write operation.

Bit/Field	Name	Type	Reset	Description
10:8	PRIGROUP	R/W	0x0	Interrupt Priority Grouping This field determines the split of group priority from subpriority (see Table 3-8 on page 124 for more information).
7:3	reserved	RO	0x0	Software should not rely on the value of a reserved bit. To provide compatibility with future products, the value of a reserved bit should be preserved across a read-modify-write operation.
2	SYSRESREQ	WO	0	System Reset Request Value Description 0 No effect. 1 Resets the core and all on-chip peripherals except the Debug interface. This bit is automatically cleared during the reset of the core and reads as 0.
1	VECTCLRACT	WO	0	Clear Active NMI / Fault This bit is reserved for Debug use and reads as 0. This bit must be written as a 0, otherwise behavior is unpredictable.
0	VECTRESET	WO	0	System Reset This bit is reserved for Debug use and reads as 0. This bit must be written as a 0, otherwise behavior is unpredictable.

Register 31: System Control (SYSCTRL), offset 0xD10

Note: This register can only be accessed from privileged mode.

The **SYSCTRL** register controls features of entry to and exit from low-power state.

System Control (SYSCTRL)

Base 0xE000.E000
Offset 0xD10
Type R/W, reset 0x0000.0000

	31	30	29	28	27	26	25	24	23	22	21	20	19	18	17	16
	reserved															
Type	RO	RO	RO	RO	RO	RO	RO	RO	RO	RO	RO	RO	RO	RO	RO	RO
Reset	0	0	0	0	0	0	0	0	0	0	0	0	0	0	0	0

	15	14	13	12	11	10	9	8	7	6	5	4	3	2	1	0
	reserved											SEVONPEND	reserved	SLEEPDEEP	SLEEPEXIT	reserved
Type	RO	RO	RO	RO	RO	RO	RO	RO	RO	RO	RO	R/W	RO	R/W	R/W	RO
Reset	0	0	0	0	0	0	0	0	0	0	0	0	0	0	0	0

Bit/Field	Name	Type	Reset	Description
31:5	reserved	RO	0x0000.00	Software should not rely on the value of a reserved bit. To provide compatibility with future products, the value of a reserved bit should be preserved across a read-modify-write operation.
4	SEVONPEND	R/W	0	Wake Up on Pending Value Description 0 Only enabled interrupts or events can wake up the processor; disabled interrupts are excluded. 1 Enabled events and all interrupts, including disabled interrupts, can wake up the processor. When an event or interrupt enters the pending state, the event signal wakes up the processor from `WFE`. If the processor is not waiting for an event, the event is registered and affects the next `WFE`. The processor also wakes up on execution of a `SEV` instruction or an external event.
3	reserved	RO	0	Software should not rely on the value of a reserved bit. To provide compatibility with future products, the value of a reserved bit should be preserved across a read-modify-write operation.
2	SLEEPDEEP	R/W	0	Deep Sleep Enable Value Description 0 Use Sleep mode as the low power mode. 1 Use Deep-sleep mode as the low power mode.

Bit/Field	Name	Type	Reset	Description
1	SLEEPEXIT	R/W	0	Sleep on ISR Exit Value Description 0 When returning from Handler mode to Thread mode, do not sleep when returning to Thread mode. 1 When returning from Handler mode to Thread mode, enter sleep or deep sleep on return from an ISR. Setting this bit enables an interrupt-driven application to avoid returning to an empty main application.
0	reserved	RO	0	Software should not rely on the value of a reserved bit. To provide compatibility with future products, the value of a reserved bit should be preserved across a read-modify-write operation.

Register 32: Configuration and Control (CFGCTRL), offset 0xD14

Note: This register can only be accessed from privileged mode.

The **CFGCTRL** register controls entry to Thread mode and enables: the handlers for NMI, hard fault and faults escalated by the **FAULTMASK** register to ignore bus faults; trapping of divide by zero and unaligned accesses; and access to the **SWTRIG** register by unprivileged software (see page 118).

Configuration and Control (CFGCTRL)

Base 0xE000.E000
Offset 0xD14
Type R/W, reset 0x0000.0000

	31	30	29	28	27	26	25	24	23	22	21	20	19	18	17	16
	reserved															
Type	RO	RO	RO	RO	RO	RO	RO	RO	RO	RO	RO	RO	RO	RO	RO	RO
Reset	0	0	0	0	0	0	0	0	0	0	0	0	0	0	0	0

	15	14	13	12	11	10	9	8	7	6	5	4	3	2	1	0
	reserved						STKALIGN	BFHFNMIGN	reserved			DIV0	UNALIGNED	reserved	MAINPEND	BASETHR
Type	RO	RO	RO	RO	RO	RO	R/W	R/W	RO	RO	RO	R/W	R/W	RO	R/W	R/W
Reset	0	0	0	0	0	0	0	0	0	0	0	0	0	0	0	0

Bit/Field	Name	Type	Reset	Description
31:10	reserved	RO	0x0000.00	Software should not rely on the value of a reserved bit. To provide compatibility with future products, the value of a reserved bit should be preserved across a read-modify-write operation.
9	STKALIGN	R/W	0	Stack Alignment on Exception Entry Value Description 0 The stack is 4-byte aligned. 1 The stack is 8-byte aligned. On exception entry, the processor uses bit 9 of the stacked **PSR** to indicate the stack alignment. On return from the exception, it uses this stacked bit to restore the correct stack alignment.
8	BFHFNMIGN	R/W	0	Ignore Bus Fault in NMI and Fault This bit enables handlers with priority -1 or -2 to ignore data bus faults caused by load and store instructions. The setting of this bit applies to the hard fault, NMI, and **FAULTMASK** escalated handlers. Value Description 0 Data bus faults caused by load and store instructions cause a lock-up. 1 Handlers running at priority -1 and -2 ignore data bus faults caused by load and store instructions. Set this bit only when the handler and its data are in absolutely safe memory. The normal use of this bit is to probe system devices and bridges to detect control path problems and fix them.
7:5	reserved	RO	0x0	Software should not rely on the value of a reserved bit. To provide compatibility with future products, the value of a reserved bit should be preserved across a read-modify-write operation.

Bit/Field	Name	Type	Reset	Description
4	DIV0	R/W	0	Trap on Divide by 0 This bit enables faulting or halting when the processor executes an `SDIV` or `UDIV` instruction with a divisor of 0. Value Description 0 Do not trap on divide by 0. A divide by zero returns a quotient of 0. 1 Trap on divide by 0.
3	UNALIGNED	R/W	0	Trap on Unaligned Access Value Description 0 Do not trap on unaligned halfword and word accesses. 1 Trap on unaligned halfword and word accesses. An unaligned access generates a usage fault. Unaligned `LDM`, `STM`, `LDRD`, and `STRD` instructions always fault regardless of whether `UNALIGNED` is set.
2	reserved	RO	0	Software should not rely on the value of a reserved bit. To provide compatibility with future products, the value of a reserved bit should be preserved across a read-modify-write operation.
1	MAINPEND	R/W	0	Allow Main Interrupt Trigger Value Description 0 Disables unprivileged software access to the **SWTRIG** register. 1 Enables unprivileged software access to the **SWTRIG** register (see page 118).
0	BASETHR	R/W	0	Thread State Control Value Description 0 The processor can enter Thread mode only when no exception is active. 1 The processor can enter Thread mode from any level under the control of an EXC_RETURN value (see “Exception Return” on page 84 for more information).

Register 33: System Handler Priority 1 (SYSPRI1), offset 0xD18

Note: This register can only be accessed from privileged mode.

The **SYSPRI1** register configures the priority level, 0 to 7 of the usage fault, bus fault, and memory management fault exception handlers. This register is byte-accessible.

System Handler Priority 1 (SYSPRI1)

Base 0xE000.E000
Offset 0xD18
Type R/W, reset 0x0000.0000

	31	30	29	28	27	26	25	24	23	22	21	20	19	18	17	16
	reserved								USAGE			reserved				
Type	RO	RO	RO	RO	RO	RO	RO	RO	R/W	R/W	R/W	RO	RO	RO	RO	RO
Reset	0	0	0	0	0	0	0	0	0	0	0	0	0	0	0	0

	15	14	13	12	11	10	9	8	7	6	5	4	3	2	1	0
	BUS			reserved					MEM			reserved				
Type	R/W	R/W	R/W	RO	RO	RO	RO	RO	R/W	R/W	R/W	RO	RO	RO	RO	RO
Reset	0	0	0	0	0	0	0	0	0	0	0	0	0	0	0	0

Bit/Field	Name	Type	Reset	Description
31:24	reserved	RO	0x00	Software should not rely on the value of a reserved bit. To provide compatibility with future products, the value of a reserved bit should be preserved across a read-modify-write operation.
23:21	USAGE	R/W	0x0	Usage Fault Priority This field configures the priority level of the usage fault. Configurable priority values are in the range 0-7, with lower values having higher priority.
20:16	reserved	RO	0x0	Software should not rely on the value of a reserved bit. To provide compatibility with future products, the value of a reserved bit should be preserved across a read-modify-write operation.
15:13	BUS	R/W	0x0	Bus Fault Priority This field configures the priority level of the bus fault. Configurable priority values are in the range 0-7, with lower values having higher priority.
12:8	reserved	RO	0x0	Software should not rely on the value of a reserved bit. To provide compatibility with future products, the value of a reserved bit should be preserved across a read-modify-write operation.
7:5	MEM	R/W	0x0	Memory Management Fault Priority This field configures the priority level of the memory management fault. Configurable priority values are in the range 0-7, with lower values having higher priority.
4:0	reserved	RO	0x0	Software should not rely on the value of a reserved bit. To provide compatibility with future products, the value of a reserved bit should be preserved across a read-modify-write operation.

Register 34: System Handler Priority 2 (SYSPRI2), offset 0xD1C

Note: This register can only be accessed from privileged mode.

The **SYSPRI2** register configures the priority level, 0 to 7 of the SVCall handler. This register is byte-accessible.

System Handler Priority 2 (SYSPRI2)

Base 0xE000.E000
Offset 0xD1C
Type R/W, reset 0x0000.0000

	31	30	29	28	27	26	25	24	23	22	21	20	19	18	17	16
	SVC			reserved												
Type	R/W	R/W	R/W	RO	RO	RO	RO	RO	RO	RO	RO	RO	RO	RO	RO	RO
Reset	0	0	0	0	0	0	0	0	0	0	0	0	0	0	0	0

	15	14	13	12	11	10	9	8	7	6	5	4	3	2	1	0
	reserved															
Type	RO	RO	RO	RO	RO	RO	RO	RO	RO	RO	RO	RO	RO	RO	RO	RO
Reset	0	0	0	0	0	0	0	0	0	0	0	0	0	0	0	0

Bit/Field	Name	Type	Reset	Description
31:29	SVC	R/W	0x0	SVCall Priority This field configures the priority level of SVCall. Configurable priority values are in the range 0-7, with lower values having higher priority.
28:0	reserved	RO	0x000.0000	Software should not rely on the value of a reserved bit. To provide compatibility with future products, the value of a reserved bit should be preserved across a read-modify-write operation.

Register 35: System Handler Priority 3 (SYSPRI3), offset 0xD20

Note: This register can only be accessed from privileged mode.

The **SYSPRI3** register configures the priority level, 0 to 7 of the SysTick exception and PendSV handlers. This register is byte-accessible.

System Handler Priority 3 (SYSPRI3)

Base 0xE000.E000
Offset 0xD20
Type R/W, reset 0x0000.0000

	31	30	29	28	27	26	25	24	23	22	21	20	19	18	17	16
	TICK			reserved					PENDSV			reserved				
Type	R/W	R/W	R/W	RO	RO	RO	RO	RO	R/W	R/W	R/W	RO	RO	RO	RO	RO
Reset	0	0	0	0	0	0	0	0	0	0	0	0	0	0	0	0

	15	14	13	12	11	10	9	8	7	6	5	4	3	2	1	0
	reserved								DEBUG			reserved				
Type	RO	RO	RO	RO	RO	RO	RO	RO	R/W	R/W	R/W	RO	RO	RO	RO	RO
Reset	0	0	0	0	0	0	0	0	0	0	0	0	0	0	0	0

Bit/Field	Name	Type	Reset	Description
31:29	TICK	R/W	0x0	SysTick Exception Priority This field configures the priority level of the SysTick exception. Configurable priority values are in the range 0-7, with lower values having higher priority.
28:24	reserved	RO	0x0	Software should not rely on the value of a reserved bit. To provide compatibility with future products, the value of a reserved bit should be preserved across a read-modify-write operation.
23:21	PENDSV	R/W	0x0	PendSV Priority This field configures the priority level of PendSV. Configurable priority values are in the range 0-7, with lower values having higher priority.
20:8	reserved	RO	0x000	Software should not rely on the value of a reserved bit. To provide compatibility with future products, the value of a reserved bit should be preserved across a read-modify-write operation.
7:5	DEBUG	R/W	0x0	Debug Priority This field configures the priority level of Debug. Configurable priority values are in the range 0-7, with lower values having higher priority.
4:0	reserved	RO	0x0.0000	Software should not rely on the value of a reserved bit. To provide compatibility with future products, the value of a reserved bit should be preserved across a read-modify-write operation.

Register 36: System Handler Control and State (SYSHNDCTRL), offset 0xD24

Note: This register can only be accessed from privileged mode.

The **SYSHNDCTRL** register enables the system handlers, and indicates the pending status of the usage fault, bus fault, memory management fault, and SVC exceptions as well as the active status of the system handlers.

If a system handler is disabled and the corresponding fault occurs, the processor treats the fault as a hard fault.

This register can be modified to change the pending or active status of system exceptions. An OS kernel can write to the active bits to perform a context switch that changes the current exception type.

Caution – Software that changes the value of an active bit in this register without correct adjustment to the stacked content can cause the processor to generate a fault exception. Ensure software that writes to this register retains and subsequently restores the current active status.

If the value of a bit in this register must be modified after enabling the system handlers, a read-modify-write procedure must be used to ensure that only the required bit is modified.

System Handler Control and State (SYSHNDCTRL)

Base 0xE000.E000
Offset 0xD24
Type R/W, reset 0x0000.0000

	31	30	29	28	27	26	25	24	23	22	21	20	19	18	17	16
	reserved													USAGE	BUS	MEM
Type	RO	RO	RO	RO	RO	RO	RO	RO	RO	RO	RO	RO	RO	R/W	R/W	R/W
Reset	0	0	0	0	0	0	0	0	0	0	0	0	0	0	0	0

	15	14	13	12	11	10	9	8	7	6	5	4	3	2	1	0
	SVC	BUSP	MEMP	USAGEP	TICK	PNDSV	reserved	MON	SVCA	reserved			USGA	reserved	BUSA	MEMA
Type	R/W	R/W	R/W	R/W	R/W	R/W	RO	R/W	R/W	RO	RO	RO	R/W	RO	R/W	R/W
Reset	0	0	0	0	0	0	0	0	0	0	0	0	0	0	0	0

Bit/Field	Name	Type	Reset	Description
31:19	reserved	RO	0x000	Software should not rely on the value of a reserved bit. To provide compatibility with future products, the value of a reserved bit should be preserved across a read-modify-write operation.
18	USAGE	R/W	0	Usage Fault Enable Value Description 0 Disables the usage fault exception. 1 Enables the usage fault exception.
17	BUS	R/W	0	Bus Fault Enable Value Description 0 Disables the bus fault exception. 1 Enables the bus fault exception.

Bit/Field	Name	Type	Reset	Description
16	MEM	R/W	0	Memory Management Fault Enable Value Description 0 Disables the memory management fault exception. 1 Enables the memory management fault exception.
15	SVC	R/W	0	SVC Call Pending Value Description 0 An SVC call exception is not pending. 1 An SVC call exception is pending. This bit can be modified to change the pending status of the SVC call exception.
14	BUSP	R/W	0	Bus Fault Pending Value Description 0 A bus fault exception is not pending. 1 A bus fault exception is pending. This bit can be modified to change the pending status of the bus fault exception.
13	MEMP	R/W	0	Memory Management Fault Pending Value Description 0 A memory management fault exception is not pending. 1 A memory management fault exception is pending. This bit can be modified to change the pending status of the memory management fault exception.
12	USAGEP	R/W	0	Usage Fault Pending Value Description 0 A usage fault exception is not pending. 1 A usage fault exception is pending. This bit can be modified to change the pending status of the usage fault exception.
11	TICK	R/W	0	SysTick Exception Active Value Description 0 A SysTick exception is not active. 1 A SysTick exception is active. This bit can be modified to change the active status of the SysTick exception, however, see the Caution above before setting this bit.

Bit/Field	Name	Type	Reset	Description
10	PNDSV	R/W	0	PendSV Exception Active Value Description 0 A PendSV exception is not active. 1 A PendSV exception is active. This bit can be modified to change the active status of the PendSV exception, however, see the Caution above before setting this bit.
9	reserved	RO	0	Software should not rely on the value of a reserved bit. To provide compatibility with future products, the value of a reserved bit should be preserved across a read-modify-write operation.
8	MON	R/W	0	Debug Monitor Active Value Description 0 The Debug monitor is not active. 1 The Debug monitor is active.
7	SVCA	R/W	0	SVC Call Active Value Description 0 SVC call is not active. 1 SVC call is active. This bit can be modified to change the active status of the SVC call exception, however, see the Caution above before setting this bit.
6:4	reserved	RO	0x0	Software should not rely on the value of a reserved bit. To provide compatibility with future products, the value of a reserved bit should be preserved across a read-modify-write operation.
3	USGA	R/W	0	Usage Fault Active Value Description 0 Usage fault is not active. 1 Usage fault is active. This bit can be modified to change the active status of the usage fault exception, however, see the Caution above before setting this bit.
2	reserved	RO	0	Software should not rely on the value of a reserved bit. To provide compatibility with future products, the value of a reserved bit should be preserved across a read-modify-write operation.
1	BUSA	R/W	0	Bus Fault Active Value Description 0 Bus fault is not active. 1 Bus fault is active. This bit can be modified to change the active status of the bus fault exception, however, see the Caution above before setting this bit.

Bit/Field	Name	Type	Reset	Description
0	MEMA	R/W	0	Memory Management Fault Active Value Description 0 Memory management fault is not active. 1 Memory management fault is active. This bit can be modified to change the active status of the memory management fault exception, however, see the Caution above before setting this bit.

Register 37: Configurable Fault Status (FAULTSTAT), offset 0xD28

Note: This register can only be accessed from privileged mode.

The **FAULTSTAT** register indicates the cause of a memory management fault, bus fault, or usage fault. Each of these functions is assigned to a subregister as follows:

- **Usage Fault Status (UFAULTSTAT)**, bits 31:16
- **Bus Fault Status (BFAULTSTAT)**, bits 15:8
- **Memory Management Fault Status (MFAULTSTAT)**, bits 7:0

FAULTSTAT is byte accessible. **FAULTSTAT** or its subregisters can be accessed as follows:

- The complete **FAULTSTAT** register, with a word access to offset 0xD28
- The **MFAULTSTAT**, with a byte access to offset 0xD28
- The **MFAULTSTAT** and **BFAULTSTAT**, with a halfword access to offset 0xD28
- The **BFAULTSTAT**, with a byte access to offset 0xD29
- The **UFAULTSTAT**, with a halfword access to offset 0xD2A

Bits are cleared by writing a 1 to them.

In a fault handler, the true faulting address can be determined by:

1. Read and save the **Memory Management Fault Address (MMADDR)** or **Bus Fault Address (FAULTADDR)** value.
2. Read the `MMARV` bit in **MFAULTSTAT**, or the `BFARV` bit in **BFAULTSTAT** to determine if the **MMADDR** or **FAULTADDR** contents are valid.

Software must follow this sequence because another higher priority exception might change the **MMADDR** or **FAULTADDR** value. For example, if a higher priority handler preempts the current fault handler, the other fault might change the **MMADDR** or **FAULTADDR** value.

Configurable Fault Status (FAULTSTAT)

Base 0xE000.E000
Offset 0xD28
Type R/W1C, reset 0x0000.0000

	31	30	29	28	27	26	25	24	23	22	21	20	19	18	17	16
	reserved						DIV0	UNALIGN	reserved				NOCP	INVPC	INVSTAT	UNDEF
Type	RO	RO	RO	RO	RO	RO	R/W1C	R/W1C	RO	RO	RO	RO	R/W1C	R/W1C	R/W1C	R/W1C
Reset	0	0	0	0	0	0	0	0	0	0	0	0	0	0	0	0

	15	14	13	12	11	10	9	8	7	6	5	4	3	2	1	0
	BFARV	reserved		BSTKE	BUSTKE	IMPRE	PRECISE	IBUS	MMARV	reserved		MSTKE	MUSTKE	reserved	DERR	IERR
Type	R/W1C	RO	RO	R/W1C	R/W1C	R/W1C	R/W1C	R/W1C	R/W1C	RO	RO	R/W1C	R/W1C	RO	R/W1C	R/W1C
Reset	0	0	0	0	0	0	0	0	0	0	0	0	0	0	0	0

Bit/Field	Name	Type	Reset	Description
31:26	reserved	RO	0x00	Software should not rely on the value of a reserved bit. To provide compatibility with future products, the value of a reserved bit should be preserved across a read-modify-write operation.

Bit/Field	Name	Type	Reset	Description
25	DIV0	R/W1C	0	Divide-by-Zero Usage Fault Value Description 0 No divide-by-zero fault has occurred, or divide-by-zero trapping is not enabled. 1 The processor has executed an `SDIV` or `UDIV` instruction with a divisor of 0. When this bit is set, the **PC** value stacked for the exception return points to the instruction that performed the divide by zero. Trapping on divide-by-zero is enabled by setting the `DIV0` bit in the **Configuration and Control (CFGCTRL)** register (see page 128). This bit is cleared by writing a 1 to it.
24	UNALIGN	R/W1C	0	Unaligned Access Usage Fault Value Description 0 No unaligned access fault has occurred, or unaligned access trapping is not enabled. 1 The processor has made an unaligned memory access. Unaligned `LDM`, `STM`, `LDRD`, and `STRD` instructions always fault regardless of the configuration of this bit. Trapping on unaligned access is enabled by setting the `UNALIGNED` bit in the **CFGCTRL** register (see page 128). This bit is cleared by writing a 1 to it.
23:20	reserved	RO	0x00	Software should not rely on the value of a reserved bit. To provide compatibility with future products, the value of a reserved bit should be preserved across a read-modify-write operation.
19	NOCP	R/W1C	0	No Coprocessor Usage Fault Value Description 0 A usage fault has not been caused by attempting to access a coprocessor. 1 The processor has attempted to access a coprocessor. This bit is cleared by writing a 1 to it.
18	INVPC	R/W1C	0	Invalid PC Load Usage Fault Value Description 0 A usage fault has not been caused by attempting to load an invalid **PC** value. 1 The processor has attempted an illegal load of EXC_RETURN to the **PC** as a result of an invalid context or an invalid EXC_RETURN value. When this bit is set, the **PC** value stacked for the exception return points to the instruction that tried to perform the illegal load of the **PC**. This bit is cleared by writing a 1 to it.

Bit/Field	Name	Type	Reset	Description
17	INVSTAT	R/W1C	0	Invalid State Usage Fault Value Description 0 A usage fault has not been caused by an invalid state. 1 The processor has attempted to execute an instruction that makes illegal use of the **EPSR** register. When this bit is set, the **PC** value stacked for the exception return points to the instruction that attempted the illegal use of the **Execution Program Status Register (EPSR)** register. This bit is not set if an undefined instruction uses the **EPSR** register. This bit is cleared by writing a 1 to it.
16	UNDEF	R/W1C	0	Undefined Instruction Usage Fault Value Description 0 A usage fault has not been caused by an undefined instruction. 1 The processor has attempted to execute an undefined instruction. When this bit is set, the **PC** value stacked for the exception return points to the undefined instruction. An undefined instruction is an instruction that the processor cannot decode. This bit is cleared by writing a 1 to it.
15	BFARV	R/W1C	0	Bus Fault Address Register Valid Value Description 0 The value in the **Bus Fault Address (FAULTADDR)** register is not a valid fault address. 1 The **FAULTADDR** register is holding a valid fault address. This bit is set after a bus fault, where the address is known. Other faults can clear this bit, such as a memory management fault occurring later. If a bus fault occurs and is escalated to a hard fault because of priority, the hard fault handler must clear this bit. This action prevents problems if returning to a stacked active bus fault handler whose **FAULTADDR** register value has been overwritten. This bit is cleared by writing a 1 to it.
14:13	reserved	RO	0	Software should not rely on the value of a reserved bit. To provide compatibility with future products, the value of a reserved bit should be preserved across a read-modify-write operation.

Bit/Field	Name	Type	Reset	Description
12	BSTKE	R/W1C	0	Stack Bus Fault Value Description 0 No bus fault has occurred on stacking for exception entry. 1 Stacking for an exception entry has caused one or more bus faults. When this bit is set, the **SP** is still adjusted but the values in the context area on the stack might be incorrect. A fault address is not written to the **FAULTADDR** register. This bit is cleared by writing a 1 to it.
11	BUSTKE	R/W1C	0	Unstack Bus Fault Value Description 0 No bus fault has occurred on unstacking for a return from exception. 1 Unstacking for a return from exception has caused one or more bus faults. This fault is chained to the handler. Thus, when this bit is set, the original return stack is still present. The **SP** is not adjusted from the failing return, a new save is not performed, and a fault address is not written to the **FAULTADDR** register. This bit is cleared by writing a 1 to it.
10	IMPRE	R/W1C	0	Imprecise Data Bus Error Value Description 0 An imprecise data bus error has not occurred. 1 A data bus error has occurred, but the return address in the stack frame is not related to the instruction that caused the error. When this bit is set, a fault address is not written to the **FAULTADDR** register. This fault is asynchronous. Therefore, if the fault is detected when the priority of the current process is higher than the bus fault priority, the bus fault becomes pending and becomes active only when the processor returns from all higher-priority processes. If a precise fault occurs before the processor enters the handler for the imprecise bus fault, the handler detects that both the `IMPRE` bit is set and one of the precise fault status bits is set. This bit is cleared by writing a 1 to it.
9	PRECISE	R/W1C	0	Precise Data Bus Error Value Description 0 A precise data bus error has not occurred. 1 A data bus error has occurred, and the **PC** value stacked for the exception return points to the instruction that caused the fault. When this bit is set, the fault address is written to the **FAULTADDR** register. This bit is cleared by writing a 1 to it.

Bit/Field	Name	Type	Reset	Description
8	IBUS	R/W1C	0	Instruction Bus Error Value Description 0 An instruction bus error has not occurred. 1 An instruction bus error has occurred. The processor detects the instruction bus error on prefetching an instruction, but sets this bit only if it attempts to issue the faulting instruction. When this bit is set, a fault address is not written to the **FAULTADDR** register. This bit is cleared by writing a 1 to it.
7	MMARV	R/W1C	0	Memory Management Fault Address Register Valid Value Description 0 The value in the **Memory Management Fault Address (MMADDR)** register is not a valid fault address. 1 The **MMADDR** register is holding a valid fault address. If a memory management fault occurs and is escalated to a hard fault because of priority, the hard fault handler must clear this bit. This action prevents problems if returning to a stacked active memory management fault handler whose **MMADDR** register value has been overwritten. This bit is cleared by writing a 1 to it.
6:5	reserved	RO	0	Software should not rely on the value of a reserved bit. To provide compatibility with future products, the value of a reserved bit should be preserved across a read-modify-write operation.
4	MSTKE	R/W1C	0	Stack Access Violation Value Description 0 No memory management fault has occurred on stacking for exception entry. 1 Stacking for an exception entry has caused one or more access violations. When this bit is set, the **SP** is still adjusted but the values in the context area on the stack might be incorrect. A fault address is not written to the **MMADDR** register. This bit is cleared by writing a 1 to it.

Bit/Field	Name	Type	Reset	Description
3	MUSTKE	R/W1C	0	Unstack Access Violation Value Description 0 No memory management fault has occurred on unstacking for a return from exception. 1 Unstacking for a return from exception has caused one or more access violations. This fault is chained to the handler. Thus, when this bit is set, the original return stack is still present. The **SP** is not adjusted from the failing return, a new save is not performed, and a fault address is not written to the **MMADDR** register. This bit is cleared by writing a 1 to it.
2	reserved	RO	0	Software should not rely on the value of a reserved bit. To provide compatibility with future products, the value of a reserved bit should be preserved across a read-modify-write operation.
1	DERR	R/W1C	0	Data Access Violation Value Description 0 A data access violation has not occurred. 1 The processor attempted a load or store at a location that does not permit the operation. When this bit is set, the **PC** value stacked for the exception return points to the faulting instruction and the address of the attempted access is written to the **MMADDR** register. This bit is cleared by writing a 1 to it.
0	IERR	R/W1C	0	Instruction Access Violation Value Description 0 An instruction access violation has not occurred. 1 The processor attempted an instruction fetch from a location that does not permit execution. This fault occurs on any access to an XN region, even when the MPU is disabled or not present. When this bit is set, the **PC** value stacked for the exception return points to the faulting instruction and the address of the attempted access is not written to the **MMADDR** register. This bit is cleared by writing a 1 to it.

Register 38: Hard Fault Status (HFAULTSTAT), offset 0xD2C

Note: This register can only be accessed from privileged mode.

The **HFAULTSTAT** register gives information about events that activate the hard fault handler.

Bits are cleared by writing a 1 to them.

Hard Fault Status (HFAULTSTAT)

Base 0xE000.E000
Offset 0xD2C
Type R/W1C, reset 0x0000.0000

	31	30	29	28	27	26	25	24	23	22	21	20	19	18	17	16
	DBG	FORCED	reserved													
Type	R/W1C	R/W1C	RO	RO	RO	RO	RO	RO	RO	RO	RO	RO	RO	RO	RO	RO
Reset	0	0	0	0	0	0	0	0	0	0	0	0	0	0	0	0

	15	14	13	12	11	10	9	8	7	6	5	4	3	2	1	0
	reserved														VECT	reserved
Type	RO	RO	RO	RO	RO	RO	RO	RO	RO	RO	RO	RO	RO	RO	R/W1C	RO
Reset	0	0	0	0	0	0	0	0	0	0	0	0	0	0	0	0

Bit/Field	Name	Type	Reset	Description
31	DBG	R/W1C	0	Debug Event This bit is reserved for Debug use. This bit must be written as a 0, otherwise behavior is unpredictable.
30	FORCED	R/W1C	0	Forced Hard Fault Value Description 0 No forced hard fault has occurred. 1 A forced hard fault has been generated by escalation of a fault with configurable priority that cannot be handled, either because of priority or because it is disabled. When this bit is set, the hard fault handler must read the other fault status registers to find the cause of the fault. This bit is cleared by writing a 1 to it.
29:2	reserved	RO	0x00	Software should not rely on the value of a reserved bit. To provide compatibility with future products, the value of a reserved bit should be preserved across a read-modify-write operation.
1	VECT	R/W1C	0	Vector Table Read Fault Value Description 0 No bus fault has occurred on a vector table read. 1 A bus fault occurred on a vector table read. This error is always handled by the hard fault handler. When this bit is set, the **PC** value stacked for the exception return points to the instruction that was preempted by the exception. This bit is cleared by writing a 1 to it.
0	reserved	RO	0	Software should not rely on the value of a reserved bit. To provide compatibility with future products, the value of a reserved bit should be preserved across a read-modify-write operation.

Register 39: Memory Management Fault Address (MMADDR), offset 0xD34

Note: This register can only be accessed from privileged mode.

The **MMADDR** register contains the address of the location that generated a memory management fault. When an unaligned access faults, the address in the **MMADDR** register is the actual address that faulted. Because a single read or write instruction can be split into multiple aligned accesses, the fault address can be any address in the range of the requested access size. Bits in the **Memory Management Fault Status (MFAULTSTAT)** register indicate the cause of the fault and whether the value in the **MMADDR** register is valid (see page 137).

Memory Management Fault Address (MMADDR)

Base 0xE000.E000
Offset 0xD34
Type R/W, reset -

	31	30	29	28	27	26	25	24	23	22	21	20	19	18	17	16
	ADDR															
Type	R/W	R/W	R/W	R/W	R/W	R/W	R/W	R/W	R/W	R/W	R/W	R/W	R/W	R/W	R/W	R/W
Reset	-	-	-	-	-	-	-	-	-	-	-	-	-	-	-	-

	15	14	13	12	11	10	9	8	7	6	5	4	3	2	1	0
	ADDR															
Type	R/W	R/W	R/W	R/W	R/W	R/W	R/W	R/W	R/W	R/W	R/W	R/W	R/W	R/W	R/W	R/W
Reset	-	-	-	-	-	-	-	-	-	-	-	-	-	-	-	-

Bit/Field	Name	Type	Reset	Description
31:0	ADDR	R/W	-	Fault Address When the `MMARV` bit of **MFAULTSTAT** is set, this field holds the address of the location that generated the memory management fault.

Register 40: Bus Fault Address (FAULTADDR), offset 0xD38

Note: This register can only be accessed from privileged mode.

The **FAULTADDR** register contains the address of the location that generated a bus fault. When an unaligned access faults, the address in the **FAULTADDR** register is the one requested by the instruction, even if it is not the address of the fault. Bits in the **Bus Fault Status (BFAULTSTAT)** register indicate the cause of the fault and whether the value in the **FAULTADDR** register is valid (see page 137).

Bus Fault Address (FAULTADDR)

Base 0xE000.E000
Offset 0xD38
Type R/W, reset -

	31	30	29	28	27	26	25	24	23	22	21	20	19	18	17	16
	ADDR															
Type	R/W	R/W	R/W	R/W	R/W	R/W	R/W	R/W	R/W	R/W	R/W	R/W	R/W	R/W	R/W	R/W
Reset	-	-	-	-	-	-	-	-	-	-	-	-	-	-	-	-

	15	14	13	12	11	10	9	8	7	6	5	4	3	2	1	0
	ADDR															
Type	R/W	R/W	R/W	R/W	R/W	R/W	R/W	R/W	R/W	R/W	R/W	R/W	R/W	R/W	R/W	R/W
Reset	-	-	-	-	-	-	-	-	-	-	-	-	-	-	-	-

Bit/Field	Name	Type	Reset	Description
31:0	ADDR	R/W	-	Fault Address When the FAULTADDRV bit of **BFAULTSTAT** is set, this field holds the address of the location that generated the bus fault.

3.6 Memory Protection Unit (MPU) Register Descriptions

This section lists and describes the Memory Protection Unit (MPU) registers, in numerical order by address offset.

The MPU registers can only be accessed from privileged mode.

Register 41: MPU Type (MPUTYPE), offset 0xD90

Note: This register can only be accessed from privileged mode.

The **MPUTYPE** register indicates whether the MPU is present, and if so, how many regions it supports.

MPU Type (MPUTYPE)

Base 0xE000.E000
Offset 0xD90
Type RO, reset 0x0000.0800

	31	30	29	28	27	26	25	24	23	22	21	20	19	18	17	16
	reserved								IREGION							
Type	RO	RO	RO	RO	RO	RO	RO	RO	RO	RO	RO	RO	RO	RO	RO	RO
Reset	0	0	0	0	0	0	0	0	0	0	0	0	0	0	0	0

	15	14	13	12	11	10	9	8	7	6	5	4	3	2	1	0
	DREGION								reserved							SEPARATE
Type	RO	RO	RO	RO	RO	RO	RO	RO	RO	RO	RO	RO	RO	RO	RO	RO
Reset	0	0	0	0	1	0	0	0	0	0	0	0	0	0	0	0

Bit/Field	Name	Type	Reset	Description
31:24	reserved	RO	0x00	Software should not rely on the value of a reserved bit. To provide compatibility with future products, the value of a reserved bit should be preserved across a read-modify-write operation.
23:16	IREGION	RO	0x00	Number of I Regions This field indicates the number of supported MPU instruction regions. This field always contains 0x00. The MPU memory map is unified and is described by the `DREGION` field.
15:8	DREGION	RO	0x08	Number of D Regions Value Description 0x08 Indicates there are eight supported MPU data regions.
7:1	reserved	RO	0x00	Software should not rely on the value of a reserved bit. To provide compatibility with future products, the value of a reserved bit should be preserved across a read-modify-write operation.
0	SEPARATE	RO	0	Separate or Unified MPU Value Description 0 Indicates the MPU is unified.

Register 42: MPU Control (MPUCTRL), offset 0xD94

Note: This register can only be accessed from privileged mode.

The **MPUCTRL** register enables the MPU, enables the default memory map background region, and enables use of the MPU when in the hard fault, Non-maskable Interrupt (NMI), and **Fault Mask Register (FAULTMASK)** escalated handlers.

When the `ENABLE` and `PRIVDEFEN` bits are both set:

- For privileged accesses, the default memory map is as described in "Memory Model" on page 68. Any access by privileged software that does not address an enabled memory region behaves as defined by the default memory map.
- Any access by unprivileged software that does not address an enabled memory region causes a memory management fault.

Execute Never (XN) and Strongly Ordered rules always apply to the System Control Space regardless of the value of the `ENABLE` bit.

When the `ENABLE` bit is set, at least one region of the memory map must be enabled for the system to function unless the `PRIVDEFEN` bit is set. If the `PRIVDEFEN` bit is set and no regions are enabled, then only privileged software can operate.

When the `ENABLE` bit is clear, the system uses the default memory map, which has the same memory attributes as if the MPU is not implemented (see Table 2-5 on page 70 for more information). The default memory map applies to accesses from both privileged and unprivileged software.

When the MPU is enabled, accesses to the System Control Space and vector table are always permitted. Other areas are accessible based on regions and whether `PRIVDEFEN` is set.

Unless `HFNMIENA` is set, the MPU is not enabled when the processor is executing the handler for an exception with priority –1 or –2. These priorities are only possible when handling a hard fault or NMI exception or when **FAULTMASK** is enabled. Setting the `HFNMIENA` bit enables the MPU when operating with these two priorities.

MPU Control (MPUCTRL)

Base 0xE000.E000
Offset 0xD94
Type R/W, reset 0x0000.0000

	31	30	29	28	27	26	25	24	23	22	21	20	19	18	17	16
	reserved															
Type	RO	RO	RO	RO	RO	RO	RO	RO	RO	RO	RO	RO	RO	RO	RO	RO
Reset	0	0	0	0	0	0	0	0	0	0	0	0	0	0	0	0

	15	14	13	12	11	10	9	8	7	6	5	4	3	2	1	0
	reserved													PRIVDEFEN	HFNMIENA	ENABLE
Type	RO	RO	RO	RO	RO	RO	RO	RO	RO	RO	RO	RO	RO	R/W	R/W	R/W
Reset	0	0	0	0	0	0	0	0	0	0	0	0	0	0	0	0

Bit/Field	Name	Type	Reset	Description
31:3	reserved	RO	0x0000.000	Software should not rely on the value of a reserved bit. To provide compatibility with future products, the value of a reserved bit should be preserved across a read-modify-write operation.

Bit/Field	Name	Type	Reset	Description
2	PRIVDEFEN	R/W	0	MPU Default Region This bit enables privileged software access to the default memory map. Value Description 0 If the MPU is enabled, this bit disables use of the default memory map. Any memory access to a location not covered by any enabled region causes a fault. 1 If the MPU is enabled, this bit enables use of the default memory map as a background region for privileged software accesses. When this bit is set, the background region acts as if it is region number -1. Any region that is defined and enabled has priority over this default map. If the MPU is disabled, the processor ignores this bit.
1	HFNMIENA	R/W	0	MPU Enabled During Faults This bit controls the operation of the MPU during hard fault, NMI, and **FAULTMASK** handlers. Value Description 0 The MPU is disabled during hard fault, NMI, and **FAULTMASK** handlers, regardless of the value of the `ENABLE` bit. 1 The MPU is enabled during hard fault, NMI, and **FAULTMASK** handlers. When the MPU is disabled and this bit is set, the resulting behavior is unpredictable.
0	ENABLE	R/W	0	MPU Enable Value Description 0 The MPU is disabled. 1 The MPU is enabled. When the MPU is disabled and the `HFNMIENA` bit is set, the resulting behavior is unpredictable.

Register 43: MPU Region Number (MPUNUMBER), offset 0xD98

Note: This register can only be accessed from privileged mode.

The **MPUNUMBER** register selects which memory region is referenced by the **MPU Region Base Address (MPUBASE)** and **MPU Region Attribute and Size (MPUATTR)** registers. Normally, the required region number should be written to this register before accessing the **MPUBASE** or the **MPUATTR** register. However, the region number can be changed by writing to the **MPUBASE** register with the `VALID` bit set (see page 150). This write updates the value of the `REGION` field.

MPU Region Number (MPUNUMBER)

Base 0xE000.E000
Offset 0xD98
Type R/W, reset 0x0000.0000

	31	30	29	28	27	26	25	24	23	22	21	20	19	18	17	16
	reserved															
Type	RO	RO	RO	RO	RO	RO	RO	RO	RO	RO	RO	RO	RO	RO	RO	RO
Reset	0	0	0	0	0	0	0	0	0	0	0	0	0	0	0	0

	15	14	13	12	11	10	9	8	7	6	5	4	3	2	1	0
	reserved													NUMBER		
Type	RO	RO	RO	RO	RO	RO	RO	RO	RO	RO	RO	RO	RO	R/W	R/W	R/W
Reset	0	0	0	0	0	0	0	0	0	0	0	0	0	0	0	0

Bit/Field	Name	Type	Reset	Description
31:3	reserved	RO	0x0000.000	Software should not rely on the value of a reserved bit. To provide compatibility with future products, the value of a reserved bit should be preserved across a read-modify-write operation.
2:0	NUMBER	R/W	0x0	MPU Region to Access This field indicates the MPU region referenced by the **MPUBASE** and **MPUATTR** registers. The MPU supports eight memory regions.

Register 44: MPU Region Base Address (MPUBASE), offset 0xD9C

Register 45: MPU Region Base Address Alias 1 (MPUBASE1), offset 0xDA4

Register 46: MPU Region Base Address Alias 2 (MPUBASE2), offset 0xDAC

Register 47: MPU Region Base Address Alias 3 (MPUBASE3), offset 0xDB4

Note: This register can only be accessed from privileged mode.

The **MPUBASE** register defines the base address of the MPU region selected by the **MPU Region Number (MPUNUMBER)** register and can update the value of the **MPUNUMBER** register. To change the current region number and update the **MPUNUMBER** register, write the **MPUBASE** register with the `VALID` bit set.

The `ADDR` field is bits 31:*N* of the **MPUBASE** register. Bits (*N*-1):5 are reserved. The region size, as specified by the `SIZE` field in the **MPU Region Attribute and Size (MPUATTR)** register, defines the value of *N* where:

$N = Log_2(\text{Region size in bytes})$

If the region size is configured to 4 GB in the **MPUATTR** register, there is no valid `ADDR` field. In this case, the region occupies the complete memory map, and the base address is 0x0000.0000.

The base address is aligned to the size of the region. For example, a 64-KB region must be aligned on a multiple of 64 KB, for example, at 0x0001.0000 or 0x0002.0000.

MPU Region Base Address (MPUBASE)

Base 0xE000.E000
Offset 0xD9C
Type R/W, reset 0x0000.0000

	31	30	29	28	27	26	25	24	23	22	21	20	19	18	17	16
	ADDR															
Type	R/W	R/W	R/W	R/W	R/W	R/W	R/W	R/W	R/W	R/W	R/W	R/W	R/W	R/W	R/W	R/W
Reset	0	0	0	0	0	0	0	0	0	0	0	0	0	0	0	0

	15	14	13	12	11	10	9	8	7	6	5	4	3	2	1	0
	ADDR											VALID	reserved	REGION		
Type	R/W	R/W	R/W	R/W	R/W	R/W	R/W	R/W	R/W	R/W	R/W	WO	RO	R/W	R/W	R/W
Reset	0	0	0	0	0	0	0	0	0	0	0	0	0	0	0	0

Bit/Field	Name	Type	Reset	Description
31:5	ADDR	R/W	0x0000.000	Base Address Mask Bits 31:*N* in this field contain the region base address. The value of *N* depends on the region size, as shown above. The remaining bits (*N*-1):5 are reserved. Software should not rely on the value of a reserved bit. To provide compatibility with future products, the value of a reserved bit should be preserved across a read-modify-write operation.

Bit/Field	Name	Type	Reset	Description
4	VALID	WO	0	Region Number Valid Value Description 0 The **MPUNUMBER** register is not changed and the processor updates the base address for the region specified in the **MPUNUMBER** register and ignores the value of the `REGION` field. 1 The **MPUNUMBER** register is updated with the value of the `REGION` field and the base address is updated for the region specified in the `REGION` field. This bit is always read as 0.
3	reserved	RO	0	Software should not rely on the value of a reserved bit. To provide compatibility with future products, the value of a reserved bit should be preserved across a read-modify-write operation.
2:0	REGION	R/W	0x0	Region Number On a write, contains the value to be written to the **MPUNUMBER** register. On a read, returns the current region number in the **MPUNUMBER** register.

Register 48: MPU Region Attribute and Size (MPUATTR), offset 0xDA0

Register 49: MPU Region Attribute and Size Alias 1 (MPUATTR1), offset 0xDA8

Register 50: MPU Region Attribute and Size Alias 2 (MPUATTR2), offset 0xDB0

Register 51: MPU Region Attribute and Size Alias 3 (MPUATTR3), offset 0xDB8

Note: This register can only be accessed from privileged mode.

The **MPUATTR** register defines the region size and memory attributes of the MPU region specified by the **MPU Region Number (MPUNUMBER)** register and enables that region and any subregions.

The **MPUATTR** register is accessible using word or halfword accesses with the most-significant halfword holding the region attributes and the least-significant halfword holds the region size and the region and subregion enable bits.

The MPU access permission attribute bits, `XN`, `AP`, `TEX`, `S`, `C`, and `B`, control access to the corresponding memory region. If an access is made to an area of memory without the required permissions, then the MPU generates a permission fault.

The `SIZE` field defines the size of the MPU memory region specified by the **MPUNUMBER** register as follows:

(Region size in bytes) = $2^{(SIZE+1)}$

The smallest permitted region size is 32 bytes, corresponding to a `SIZE` value of `4`. Table 3-9 on page 152 gives example `SIZE` values with the corresponding region size and value of N in the **MPU Region Base Address (MPUBASE)** register.

Table 3-9. Example SIZE Field Values

`SIZE` Encoding	Region Size	Value of N[a]	Note
00100b (0x4)	32 B	5	Minimum permitted size
01001b (0x9)	1 KB	10	-
10011b (0x13)	1 MB	20	-
11101b (0x1D)	1 GB	30	-
11111b (0x1F)	4 GB	No valid ADDR field in **MPUBASE**; the region occupies the complete memory map.	Maximum possible size

a. Refers to the N parameter in the **MPUBASE** register (see page 150).

MPU Region Attribute and Size (MPUATTR)

Base 0xE000.E000
Offset 0xDA0
Type R/W, reset 0x0000.0000

	31	30	29	28	27	26	25	24	23	22	21	20	19	18	17	16
	reserved			XN	reserved	AP			reserved		TEX			S	C	B
Type	RO	RO	RO	R/W	RO	R/W	R/W	R/W	RO	RO	R/W	R/W	R/W	R/W	R/W	R/W
Reset	0	0	0	0	0	0	0	0	0	0	0	0	0	0	0	0

	15	14	13	12	11	10	9	8	7	6	5	4	3	2	1	0
	SRD								reserved		SIZE					ENABLE
Type	R/W	R/W	R/W	R/W	R/W	R/W	R/W	R/W	RO	RO	R/W	R/W	R/W	R/W	R/W	R/W
Reset	0	0	0	0	0	0	0	0	0	0	0	0	0	0	0	0

Bit/Field	Name	Type	Reset	Description
31:29	reserved	RO	0x00	Software should not rely on the value of a reserved bit. To provide compatibility with future products, the value of a reserved bit should be preserved across a read-modify-write operation.
28	XN	R/W	0	Instruction Access Disable Value Description 0 Instruction fetches are enabled. 1 Instruction fetches are disabled.
27	reserved	RO	0	Software should not rely on the value of a reserved bit. To provide compatibility with future products, the value of a reserved bit should be preserved across a read-modify-write operation.
26:24	AP	R/W	0	Access Privilege For information on using this bit field, see Table 3-5 on page 98.
23:22	reserved	RO	0x0	Software should not rely on the value of a reserved bit. To provide compatibility with future products, the value of a reserved bit should be preserved across a read-modify-write operation.
21:19	TEX	R/W	0x0	Type Extension Mask For information on using this bit field, see Table 3-3 on page 97.
18	S	R/W	0	Shareable For information on using this bit, see Table 3-3 on page 97.
17	C	R/W	0	Cacheable For information on using this bit, see Table 3-3 on page 97.
16	B	R/W	0	Bufferable For information on using this bit, see Table 3-3 on page 97.
15:8	SRD	R/W	0x00	Subregion Disable Bits Value Description 0 The corresponding subregion is enabled. 1 The corresponding subregion is disabled. Region sizes of 128 bytes and less do not support subregions. When writing the attributes for such a region, configure the `SRD` field as 0x00. See the section called “Subregions” on page 96 for more information.
7:6	reserved	RO	0x0	Software should not rely on the value of a reserved bit. To provide compatibility with future products, the value of a reserved bit should be preserved across a read-modify-write operation.
5:1	SIZE	R/W	0x0	Region Size Mask The `SIZE` field defines the size of the MPU memory region specified by the **MPUNUMBER** register. Refer to Table 3-9 on page 152 for more information.

Bit/Field	Name	Type	Reset	Description
0	ENABLE	R/W	0	Region Enable Value Description 0 The region is disabled. 1 The region is enabled.

4 JTAG Interface

The Joint Test Action Group (JTAG) port is an IEEE standard that defines a Test Access Port and Boundary Scan Architecture for digital integrated circuits and provides a standardized serial interface for controlling the associated test logic. The TAP, Instruction Register (IR), and Data Registers (DR) can be used to test the interconnections of assembled printed circuit boards and obtain manufacturing information on the components. The JTAG Port also provides a means of accessing and controlling design-for-test features such as I/O pin observation and control, scan testing, and debugging.

The JTAG port is comprised of four pins: `TCK`, `TMS`, `TDI`, and `TDO`. Data is transmitted serially into the controller on `TDI` and out of the controller on `TDO`. The interpretation of this data is dependent on the current state of the TAP controller. For detailed information on the operation of the JTAG port and TAP controller, please refer to the *IEEE Standard 1149.1-Test Access Port and Boundary-Scan Architecture*.

The Stellaris® JTAG controller works with the ARM JTAG controller built into the Cortex-M3 core. This is implemented by multiplexing the `TDO` outputs from both JTAG controllers. ARM JTAG instructions select the ARM `TDO` output while Stellaris JTAG instructions select the Stellaris `TDO` outputs. The multiplexer is controlled by the Stellaris JTAG controller, which has comprehensive programming for the ARM, Stellaris, and unimplemented JTAG instructions.

The Stellaris JTAG module has the following features:

- IEEE 1149.1-1990 compatible Test Access Port (TAP) controller
- Four-bit Instruction Register (IR) chain for storing JTAG instructions
- IEEE standard instructions: BYPASS, IDCODE, SAMPLE/PRELOAD, EXTEST and INTEST
- ARM additional instructions: APACC, DPACC and ABORT
- Integrated ARM Serial Wire Debug (SWD)

See the *ARM® Debug Interface V5 Architecture Specification* for more information on the ARM JTAG controller.

4.1 Block Diagram

Figure 4-1. JTAG Module Block Diagram

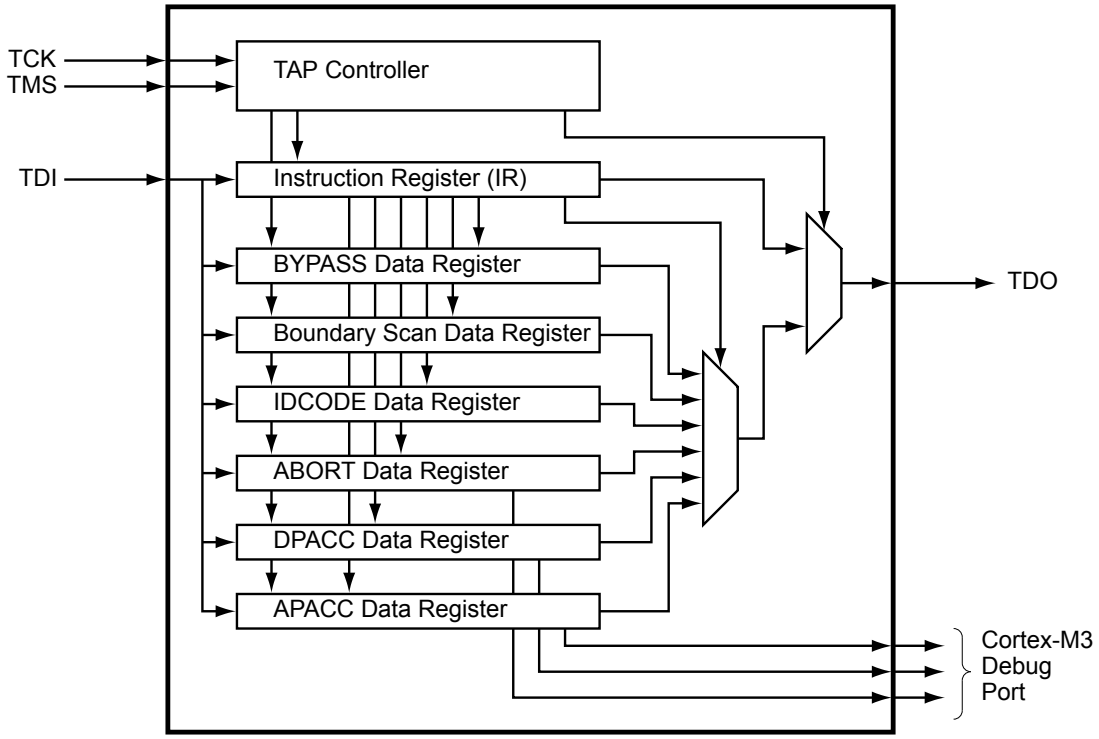

4.2 Signal Description

Table 4-1 on page 156 lists the external signals of the JTAG/SWD controller and describes the function of each. The JTAG/SWD controller signals are alternate functions for some GPIO signals, however note that the reset state of the pins is for the JTAG/SWD function. The JTAG/SWD controller signals are under commit protection and require a special process to be configured as GPIOs, see “Commit Control” on page 330. The column in the table below titled "Pin Assignment" lists the GPIO pin placement for the JTAG/SWD controller signals. The AFSEL bit in the **GPIO Alternate Function Select (GPIOAFSEL)** register (page 344) is set to choose the JTAG/SWD function. For more information on configuring GPIOs, see “General-Purpose Input/Outputs (GPIOs)” on page 324.

Table 4-1. JTAG_SWD_SWO Signals (64LQFP)

Pin Name	Pin Number	Pin Type	Buffer Type[a]	Description
SWCLK	52	I	TTL	JTAG/SWD CLK.
SWDIO	51	I/O	TTL	JTAG TMS and SWDIO.
SWO	49	O	TTL	JTAG TDO and SWO.
TCK	52	I	TTL	JTAG/SWD CLK.
TDI	50	I	TTL	JTAG TDI.
TDO	49	O	TTL	JTAG TDO and SWO.
TMS	51	I/O	TTL	JTAG TMS and SWDIO.

a. The TTL designation indicates the pin has TTL-compatible voltage levels.

4.3 Functional Description

A high-level conceptual drawing of the JTAG module is shown in Figure 4-1 on page 156. The JTAG module is composed of the Test Access Port (TAP) controller and serial shift chains with parallel update registers. The TAP controller is a simple state machine controlled by the TCK and TMS inputs. The current state of the TAP controller depends on the sequence of values captured on TMS at the rising edge of TCK. The TAP controller determines when the serial shift chains capture new data, shift data from TDI towards TDO, and update the parallel load registers. The current state of the TAP controller also determines whether the Instruction Register (IR) chain or one of the Data Register (DR) chains is being accessed.

The serial shift chains with parallel load registers are comprised of a single Instruction Register (IR) chain and multiple Data Register (DR) chains. The current instruction loaded in the parallel load register determines which DR chain is captured, shifted, or updated during the sequencing of the TAP controller.

Some instructions, like EXTEST and INTEST, operate on data currently in a DR chain and do not capture, shift, or update any of the chains. Instructions that are not implemented decode to the BYPASS instruction to ensure that the serial path between TDI and TDO is always connected (see Table 4-3 on page 163 for a list of implemented instructions).

See “JTAG and Boundary Scan” on page 678 for JTAG timing diagrams.

4.3.1 JTAG Interface Pins

The JTAG interface consists of four standard pins: TCK, TMS, TDI, and TDO. These pins and their associated reset state are given in Table 4-2 on page 157. Detailed information on each pin follows.

Table 4-2. JTAG Port Pins Reset State

Pin Name	Data Direction	Internal Pull-Up	Internal Pull-Down	Drive Strength	Drive Value
TCK	Input	Enabled	Disabled	N/A	N/A
TMS	Input	Enabled	Disabled	N/A	N/A
TDI	Input	Enabled	Disabled	N/A	N/A
TDO	Output	Enabled	Disabled	2-mA driver	High-Z

4.3.1.1 Test Clock Input (TCK)

The TCK pin is the clock for the JTAG module. This clock is provided so the test logic can operate independently of any other system clocks. In addition, it ensures that multiple JTAG TAP controllers that are daisy-chained together can synchronously communicate serial test data between components. During normal operation, TCK is driven by a free-running clock with a nominal 50% duty cycle. When necessary, TCK can be stopped at 0 or 1 for extended periods of time. While TCK is stopped at 0 or 1, the state of the TAP controller does not change and data in the JTAG Instruction and Data Registers is not lost.

By default, the internal pull-up resistor on the TCK pin is enabled after reset. This assures that no clocking occurs if the pin is not driven from an external source. The internal pull-up and pull-down resistors can be turned off to save internal power as long as the TCK pin is constantly being driven by an external source.

4.3.1.2 Test Mode Select (TMS)

The TMS pin selects the next state of the JTAG TAP controller. TMS is sampled on the rising edge of TCK. Depending on the current TAP state and the sampled value of TMS, the next state is entered.

Because the TMS pin is sampled on the rising edge of TCK, the *IEEE Standard 1149.1* expects the value on TMS to change on the falling edge of TCK.

Holding TMS high for five consecutive TCK cycles drives the TAP controller state machine to the Test-Logic-Reset state. When the TAP controller enters the Test-Logic-Reset state, the JTAG module and associated registers are reset to their default values. This procedure should be performed to initialize the JTAG controller. The JTAG Test Access Port state machine can be seen in its entirety in Figure 4-2 on page 159.

By default, the internal pull-up resistor on the TMS pin is enabled after reset. Changes to the pull-up resistor settings on GPIO Port C should ensure that the internal pull-up resistor remains enabled on PC1/TMS; otherwise JTAG communication could be lost.

4.3.1.3 Test Data Input (TDI)

The TDI pin provides a stream of serial information to the IR chain and the DR chains. TDI is sampled on the rising edge of TCK and, depending on the current TAP state and the current instruction, presents this data to the proper shift register chain. Because the TDI pin is sampled on the rising edge of TCK, the *IEEE Standard 1149.1* expects the value on TDI to change on the falling edge of TCK.

By default, the internal pull-up resistor on the TDI pin is enabled after reset. Changes to the pull-up resistor settings on GPIO Port C should ensure that the internal pull-up resistor remains enabled on PC2/TDI; otherwise JTAG communication could be lost.

4.3.1.4 Test Data Output (TDO)

The TDO pin provides an output stream of serial information from the IR chain or the DR chains. The value of TDO depends on the current TAP state, the current instruction, and the data in the chain being accessed. In order to save power when the JTAG port is not being used, the TDO pin is placed in an inactive drive state when not actively shifting out data. Because TDO can be connected to the TDI of another controller in a daisy-chain configuration, the *IEEE Standard 1149.1* expects the value on TDO to change on the falling edge of TCK.

By default, the internal pull-up resistor on the TDO pin is enabled after reset. This assures that the pin remains at a constant logic level when the JTAG port is not being used. The internal pull-up and pull-down resistors can be turned off to save internal power if a High-Z output value is acceptable during certain TAP controller states.

4.3.2 JTAG TAP Controller

The JTAG TAP controller state machine is shown in Figure 4-2 on page 159. The TAP controller state machine is reset to the Test-Logic-Reset state on the assertion of a Power-On-Reset (POR). In order to reset the JTAG module after the device has been powered on, the TMS input must be held HIGH for five TCK clock cycles, resetting the TAP controller and all associated JTAG chains. Asserting the correct sequence on the TMS pin allows the JTAG module to shift in new instructions, shift in data, or idle during extended testing sequences. For detailed information on the function of the TAP controller and the operations that occur in each state, please refer to *IEEE Standard 1149.1*.

Figure 4-2. Test Access Port State Machine

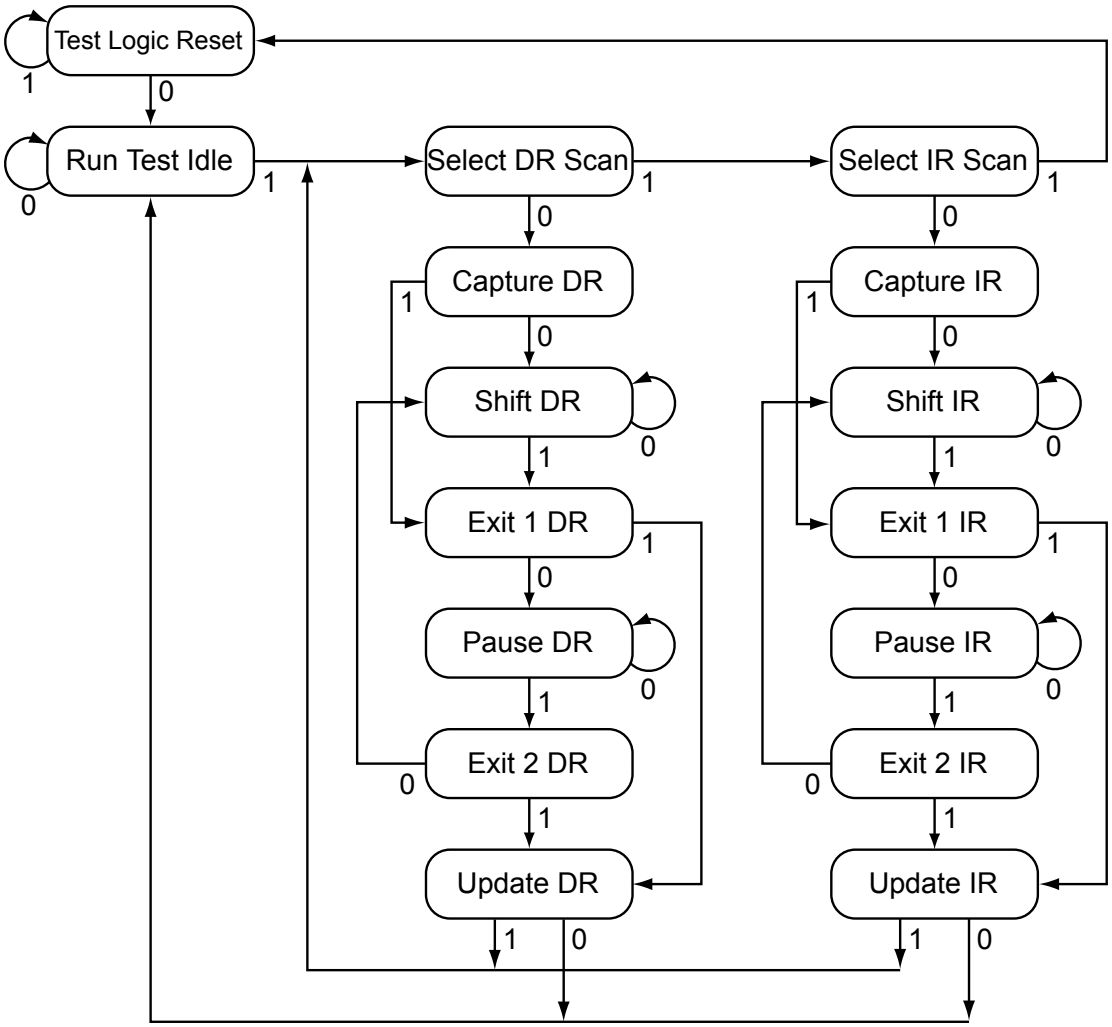

4.3.3 Shift Registers

The Shift Registers consist of a serial shift register chain and a parallel load register. The serial shift register chain samples specific information during the TAP controller's CAPTURE states and allows this information to be shifted out of `TDO` during the TAP controller's SHIFT states. While the sampled data is being shifted out of the chain on `TDO`, new data is being shifted into the serial shift register on `TDI`. This new data is stored in the parallel load register during the TAP controller's UPDATE states. Each of the shift registers is discussed in detail in "Register Descriptions" on page 162.

4.3.4 Operational Considerations

There are certain operational considerations when using the JTAG module. Because the JTAG pins can be programmed to be GPIOs, board configuration and reset conditions on these pins must be considered. In addition, because the JTAG module has integrated ARM Serial Wire Debug, the method for switching between these two operational modes is described below.

4.3.4.1 GPIO Functionality

When the controller is reset with either a POR or $\overline{\text{RST}}$, the JTAG/SWD port pins default to their JTAG/SWD configurations. The default configuration includes enabling digital functionality (setting **GPIODEN** to 1), enabling the pull-up resistors (setting **GPIOPUR** to 1), and enabling the alternate hardware function (setting **GPIOAFSEL** to 1) for the `PC[3:0]` JTAG/SWD pins.

It is possible for software to configure these pins as GPIOs after reset by writing 0s to `PC[3:0]` in the **GPIOAFSEL** register. If the user does not require the JTAG/SWD port for debugging or board-level testing, this provides four more GPIOs for use in the design.

Caution – It is possible to create a software sequence that prevents the debugger from connecting to the Stellaris microcontroller. If the program code loaded into flash immediately changes the JTAG pins to their GPIO functionality, the debugger may not have enough time to connect and halt the controller before the JTAG pin functionality switches. This may lock the debugger out of the part. This can be avoided with a software routine that restores JTAG functionality based on an external or software trigger.

The GPIO commit control registers provide a layer of protection against accidental programming of critical hardware peripherals. Protection is currently provided for the `NMI` pin (`PB7`) and the four JTAG/SWD pins (`PC[3:0]`). Writes to protected bits of the **GPIO Alternate Function Select (GPIOAFSEL)** register (see page 344), **GPIO Pull-Up Select (GPIOPUR)** register (see page 350), and **GPIO Digital Enable (GPIODEN)** register (see page 354) are not committed to storage unless the **GPIO Lock (GPIOLOCK)** register (see page 356) has been unlocked and the appropriate bits of the **GPIO Commit (GPIOCR)** register (see page 357) have been set to 1.

Recovering a "Locked" Device

Note: Performing the sequence below causes the nonvolatile registers discussed in “Nonvolatile Register Programming” on page 237 to be restored to their factory default values. The mass erase of the flash memory caused by the below sequence occurs prior to the nonvolatile registers being restored.

If software configures any of the JTAG/SWD pins as GPIO and loses the ability to communicate with the debugger, there is a debug sequence that can be used to recover the device. Performing a total of ten JTAG-to-SWD and SWD-to-JTAG switch sequences while holding the device in reset mass erases the flash memory. The sequence to recover the device is:

1. Assert and hold the $\overline{\text{RST}}$ signal.
2. Apply power to the device.
3. Perform the JTAG-to-SWD switch sequence.
4. Perform the SWD-to-JTAG switch sequence.
5. Perform the JTAG-to-SWD switch sequence.
6. Perform the SWD-to-JTAG switch sequence.
7. Perform the JTAG-to-SWD switch sequence.
8. Perform the SWD-to-JTAG switch sequence.
9. Perform the JTAG-to-SWD switch sequence.

10. Perform the SWD-to-JTAG switch sequence.
11. Perform the JTAG-to-SWD switch sequence.
12. Perform the SWD-to-JTAG switch sequence.
13. Release the $\overline{\text{RST}}$ signal.
14. Wait 400 ms.
15. Power-cycle the device.

The JTAG-to-SWD and SWD-to-JTAG switch sequences are described in "ARM Serial Wire Debug (SWD)" on page 161. When performing switch sequences for the purpose of recovering the debug capabilities of the device, only steps 1 and 2 of the switch sequence in the section called "JTAG-to-SWD Switching" on page 161 must be performed.

4.3.4.2 Communication with JTAG/SWD

Because the debug clock and the system clock can be running at different frequencies, care must be taken to maintain reliable communication with the JTAG/SWD interface. In the Capture-DR state, the result of the previous transaction, if any, is returned, together with a 3-bit ACK response. Software should check the ACK response to see if the previous operation has completed before initiating a new transaction. Alternatively, if the system clock is at least 8 times faster than the debug clock (`TCK` or `SWCLK`), the previous operation has enough time to complete and the ACK bits do not have to be checked.

4.3.4.3 ARM Serial Wire Debug (SWD)

In order to seamlessly integrate the ARM Serial Wire Debug (SWD) functionality, a serial-wire debugger must be able to connect to the Cortex-M3 core without having to perform, or have any knowledge of, JTAG cycles. This is accomplished with a SWD preamble that is issued before the SWD session begins.

The switching preamble used to enable the SWD interface of the SWJ-DP module starts with the TAP controller in the Test-Logic-Reset state. From here, the preamble sequences the TAP controller through the following states: Run Test Idle, Select DR, Select IR, Test Logic Reset, Test Logic Reset, Run Test Idle, Run Test Idle, Select DR, Select IR, Test Logic Reset, Test Logic Reset, Run Test Idle, Run Test Idle, Select DR, Select IR, and Test Logic Reset states.

Stepping through this sequences of the TAP state machine enables the SWD interface and disables the JTAG interface. For more information on this operation and the SWD interface, see the *ARM® Debug Interface V5 Architecture Specification*.

Because this sequence is a valid series of JTAG operations that could be issued, the ARM JTAG TAP controller is not fully compliant to the *IEEE Standard 1149.1*. This is the only instance where the ARM JTAG TAP controller does not meet full compliance with the specification. Due to the low probability of this sequence occurring during normal operation of the TAP controller, it should not affect normal performance of the JTAG interface.

JTAG-to-SWD Switching

To switch the operating mode of the Debug Access Port (DAP) from JTAG to SWD mode, the external debug hardware must send the switching preamble to the microcontroller. The 16-bit TMS/SWDIO command for switching to SWD mode is defined as b1110.0111.1001.1110, transmitted LSB first. This command can also be represented as 0xE79E when transmitted LSB first. The

complete switch sequence should consist of the following transactions on the TCK/SWCLK and TMS/SWDIO signals:

1. Send at least 50 TCK/SWCLK cycles with TMS/SWDIO High to ensure that both JTAG and SWD are in their reset states.
2. Send the 16-bit JTAG-to-SWD switch command, 0xE79E, on TMS/SWDIO.
3. Send at least 50 TCK/SWCLK cycles with TMS/SWDIO High to ensure that if SWJ-DP was already in SWD mode before sending the switch sequence, the SWD goes into the line reset state.

To verify that the Debug Access Port (DAP) has switched to the Serial Wire Debug (SWD) operating mode, perform a SWD READID operation. The ID value can be compared against the device's known ID to verify the switch.

SWD-to-JTAG Switching

To switch the operating mode of the Debug Access Port (DAP) from SWD to JTAG mode, the external debug hardware must send a switch command to the microcontroller. The 16-bit TMS/SWDIO command for switching to JTAG mode is defined as b1110.0111.0011.1100, transmitted LSB first. This command can also be represented as 0xE73C when transmitted LSB first. The complete switch sequence should consist of the following transactions on the TCK/SWCLK and TMS/SWDIO signals:

1. Send at least 50 TCK/SWCLK cycles with TMS/SWDIO High to ensure that both JTAG and SWD are in their reset states.
2. Send the 16-bit SWD-to-JTAG switch command, 0xE73C, on TMS/SWDIO.
3. Send at least 50 TCK/SWCLK cycles with TMS/SWDIO High to ensure that if SWJ-DP was already in JTAG mode before sending the switch sequence, the JTAG goes into the Test Logic Reset state.

To verify that the Debug Access Port (DAP) has switched to the JTAG operating mode, set the JTAG Instruction Register (IR) to the IDCODE instruction and shift out the Data Register (DR). The DR value can be compared against the device's known IDCODE to verify the switch.

4.4 Initialization and Configuration

After a Power-On-Reset or an external reset ($\overline{\text{RST}}$), the JTAG pins are automatically configured for JTAG communication. No user-defined initialization or configuration is needed. However, if the user application changes these pins to their GPIO function, they must be configured back to their JTAG functionality before JTAG communication can be restored. This is done by enabling the four JTAG pins (PC[3:0]) for their alternate function using the **GPIOAFSEL** register. In addition to enabling the alternate functions, any other changes to the GPIO pad configurations on the four JTAG pins (PC[3:0]) should be reverted to their default settings.

4.5 Register Descriptions

There are no APB-accessible registers in the JTAG TAP Controller or Shift Register chains. The registers within the JTAG controller are all accessed serially through the TAP Controller. The registers can be broken down into two main categories: Instruction Registers and Data Registers.

4.5.1 Instruction Register (IR)

The JTAG TAP Instruction Register (IR) is a four-bit serial scan chain connected between the JTAG TDI and TDO pins with a parallel load register. When the TAP Controller is placed in the correct states, bits can be shifted into the Instruction Register. Once these bits have been shifted into the chain and updated, they are interpreted as the current instruction. The decode of the Instruction Register bits is shown in Table 4-3 on page 163. A detailed explanation of each instruction, along with its associated Data Register, follows.

Table 4-3. JTAG Instruction Register Commands

IR[3:0]	Instruction	Description
0000	EXTEST	Drives the values preloaded into the Boundary Scan Chain by the SAMPLE/PRELOAD instruction onto the pads.
0001	INTEST	Drives the values preloaded into the Boundary Scan Chain by the SAMPLE/PRELOAD instruction into the controller.
0010	SAMPLE / PRELOAD	Captures the current I/O values and shifts the sampled values out of the Boundary Scan Chain while new preload data is shifted in.
1000	ABORT	Shifts data into the ARM Debug Port Abort Register.
1010	DPACC	Shifts data into and out of the ARM DP Access Register.
1011	APACC	Shifts data into and out of the ARM AC Access Register.
1110	IDCODE	Loads manufacturing information defined by the *IEEE Standard 1149.1* into the IDCODE chain and shifts it out.
1111	BYPASS	Connects TDI to TDO through a single Shift Register chain.
All Others	Reserved	Defaults to the BYPASS instruction to ensure that TDI is always connected to TDO.

4.5.1.1 EXTEST Instruction

The EXTEST instruction is not associated with its own Data Register chain. The EXTEST instruction uses the data that has been preloaded into the Boundary Scan Data Register using the SAMPLE/PRELOAD instruction. When the EXTEST instruction is present in the Instruction Register, the preloaded data in the Boundary Scan Data Register associated with the outputs and output enables are used to drive the GPIO pads rather than the signals coming from the core. This allows tests to be developed that drive known values out of the controller, which can be used to verify connectivity. While the EXTEST instruction is present in the Instruction Register, the Boundary Scan Data Register can be accessed to sample and shift out the current data and load new data into the Boundary Scan Data Register.

4.5.1.2 INTEST Instruction

The INTEST instruction is not associated with its own Data Register chain. The INTEST instruction uses the data that has been preloaded into the Boundary Scan Data Register using the SAMPLE/PRELOAD instruction. When the INTEST instruction is present in the Instruction Register, the preloaded data in the Boundary Scan Data Register associated with the inputs are used to drive the signals going into the core rather than the signals coming from the GPIO pads. This allows tests to be developed that drive known values into the controller, which can be used for testing.While the INTEXT instruction is present in the Instruction Register, the Boundary Scan Data Register can be accessed to sample and shift out the current data and load new data into the Boundary Scan Data Register.

4.5.1.3 SAMPLE/PRELOAD Instruction

The SAMPLE/PRELOAD instruction connects the Boundary Scan Data Register chain between TDI and TDO. This instruction samples the current state of the pad pins for observation and preloads new test data. Each GPIO pad has an associated input, output, and output enable signal. When the TAP controller enters the Capture DR state during this instruction, the input, output, and output-enable signals to each of the GPIO pads are captured. These samples are serially shifted out of TDO while the TAP controller is in the Shift DR state and can be used for observation or comparison in various tests.

While these samples of the inputs, outputs, and output enables are being shifted out of the Boundary Scan Data Register, new data is being shifted into the Boundary Scan Data Register from TDI. Once the new data has been shifted into the Boundary Scan Data Register, the data is saved in the parallel load registers when the TAP controller enters the Update DR state. This update of the parallel load register preloads data into the Boundary Scan Data Register that is associated with each input, output, and output enable. This preloaded data can be used with the EXTEST and INTEST instructions to drive data into or out of the controller. Please see “Boundary Scan Data Register” on page 165 for more information.

4.5.1.4 ABORT Instruction

The ABORT instruction connects the associated ABORT Data Register chain between TDI and TDO. This instruction provides read and write access to the ABORT Register of the ARM Debug Access Port (DAP). Shifting the proper data into this Data Register clears various error bits or initiates a DAP abort of a previous request. Please see the “ABORT Data Register” on page 166 for more information.

4.5.1.5 DPACC Instruction

The DPACC instruction connects the associated DPACC Data Register chain between TDI and TDO. This instruction provides read and write access to the DPACC Register of the ARM Debug Access Port (DAP). Shifting the proper data into this register and reading the data output from this register allows read and write access to the ARM debug and status registers. Please see “DPACC Data Register” on page 166 for more information.

4.5.1.6 APACC Instruction

The APACC instruction connects the associated APACC Data Register chain between TDI and TDO. This instruction provides read and write access to the APACC Register of the ARM Debug Access Port (DAP). Shifting the proper data into this register and reading the data output from this register allows read and write access to internal components and buses through the Debug Port. Please see “APACC Data Register” on page 166 for more information.

4.5.1.7 IDCODE Instruction

The IDCODE instruction connects the associated IDCODE Data Register chain between TDI and TDO. This instruction provides information on the manufacturer, part number, and version of the ARM core. This information can be used by testing equipment and debuggers to automatically configure their input and output data streams. IDCODE is the default instruction that is loaded into the JTAG Instruction Register when a Power-On-Reset (POR) is asserted, or the Test-Logic-Reset state is entered. Please see “IDCODE Data Register” on page 165 for more information.

4.5.1.8 BYPASS Instruction

The BYPASS instruction connects the associated BYPASS Data Register chain between TDI and TDO. This instruction is used to create a minimum length serial path between the TDI and TDO ports.

The BYPASS Data Register is a single-bit shift register. This instruction improves test efficiency by allowing components that are not needed for a specific test to be bypassed in the JTAG scan chain by loading them with the BYPASS instruction. Please see “BYPASS Data Register” on page 165 for more information.

4.5.2 Data Registers

The JTAG module contains six Data Registers. These include: IDCODE, BYPASS, Boundary Scan, APACC, DPACC, and ABORT serial Data Register chains. Each of these Data Registers is discussed in the following sections.

4.5.2.1 IDCODE Data Register

The format for the 32-bit IDCODE Data Register defined by the *IEEE Standard 1149.1* is shown in Figure 4-3 on page 165. The standard requires that every JTAG-compliant device implement either the IDCODE instruction or the BYPASS instruction as the default instruction. The LSB of the IDCODE Data Register is defined to be a 1 to distinguish it from the BYPASS instruction, which has an LSB of 0. This allows auto configuration test tools to determine which instruction is the default instruction.

The major uses of the JTAG port are for manufacturer testing of component assembly, and program development and debug. To facilitate the use of auto-configuration debug tools, the IDCODE instruction outputs a value of 0x3BA0.0477. This allows the debuggers to automatically configure themselves to work correctly with the Cortex-M3 during debug.

Figure 4-3. IDCODE Register Format

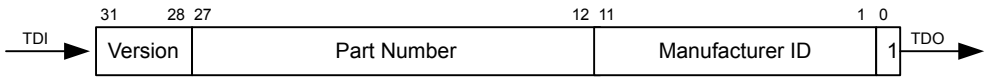

4.5.2.2 BYPASS Data Register

The format for the 1-bit BYPASS Data Register defined by the *IEEE Standard 1149.1* is shown in Figure 4-4 on page 165. The standard requires that every JTAG-compliant device implement either the BYPASS instruction or the IDCODE instruction as the default instruction. The LSB of the BYPASS Data Register is defined to be a 0 to distinguish it from the IDCODE instruction, which has an LSB of 1. This allows auto configuration test tools to determine which instruction is the default instruction.

Figure 4-4. BYPASS Register Format

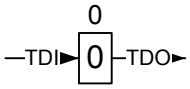

4.5.2.3 Boundary Scan Data Register

The format of the Boundary Scan Data Register is shown in Figure 4-5 on page 166. Each GPIO pin, starting with a GPIO pin next to the JTAG port pins, is included in the Boundary Scan Data Register. Each GPIO pin has three associated digital signals that are included in the chain. These signals are input, output, and output enable, and are arranged in that order as can be seen in the figure.

When the Boundary Scan Data Register is accessed with the SAMPLE/PRELOAD instruction, the input, output, and output enable from each digital pad are sampled and then shifted out of the chain to be verified. The sampling of these values occurs on the rising edge of TCK in the Capture DR state of the TAP controller. While the sampled data is being shifted out of the Boundary Scan chain in the Shift DR state of the TAP controller, new data can be preloaded into the chain for use with the EXTEST and INTEST instructions. These instructions either force data out of the controller, with the EXTEST instruction, or into the controller, with the INTEST instruction.

Figure 4-5. Boundary Scan Register Format

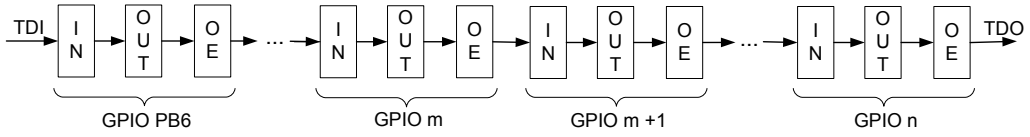

4.5.2.4 APACC Data Register

The format for the 35-bit APACC Data Register defined by ARM is described in the *ARM® Debug Interface V5 Architecture Specification*.

4.5.2.5 DPACC Data Register

The format for the 35-bit DPACC Data Register defined by ARM is described in the *ARM® Debug Interface V5 Architecture Specification*.

4.5.2.6 ABORT Data Register

The format for the 35-bit ABORT Data Register defined by ARM is described in the *ARM® Debug Interface V5 Architecture Specification*.

5 System Control

System control determines the overall operation of the device. It provides information about the device, controls the clocking to the core and individual peripherals, and handles reset detection and reporting.

5.1 Signal Description

Table 5-1 on page 167 lists the external signals of the System Control module and describes the function of each. The NMI signal is the alternate function for and functions as a GPIO after reset. under commit protection and require a special process to be configured as any alternate function or to subsequently return to the GPIO function, see “Commit Control” on page 330. The column in the table below titled "Pin Assignment" lists the GPIO pin placement for the NMI signal. The AFSEL bit in the **GPIO Alternate Function Select (GPIOAFSEL)** register (page 344) should be set to choose the NMI function. For more information on configuring GPIOs, see “General-Purpose Input/Outputs (GPIOs)” on page 324. The remaining signals (with the word "fixed" in the Pin Assignment column) have a fixed pin assignment and function.

Table 5-1. System Control & Clocks Signals (64LQFP)

Pin Name	Pin Number	Pin Type	Buffer Type[a]	Description
NMI	55	I	TTL	Non-maskable interrupt.
OSC0	30	I	Analog	Main oscillator crystal input or an external clock reference input.
OSC1	31	O	Analog	Main oscillator crystal output. Leave unconnected when using a single-ended clock source.
RST	40	I	TTL	System reset input.

a. The TTL designation indicates the pin has TTL-compatible voltage levels.

5.2 Functional Description

The System Control module provides the following capabilities:

- Device identification (see “Device Identification” on page 167)
- Local control, such as reset (see “Reset Control” on page 167), power (see “Power Control” on page 172) and clock control (see “Clock Control” on page 172)
- System control (Run, Sleep, and Deep-Sleep modes); see “System Control” on page 177

5.2.1 Device Identification

Several read-only registers provide software with information on the microcontroller, such as version, part number, SRAM size, flash size, and other features. See the **DID0**, **DID1**, and **DC0**-**DC7** registers.

5.2.2 Reset Control

This section discusses aspects of hardware functions during reset as well as system software requirements following the reset sequence.

5.2.2.1 Reset Sources

The controller has six sources of reset:

1. External reset input pin ($\overline{RST}$) assertion; see “External $\overline{RST}$ Pin” on page 169.
2. Power-on reset (POR); see “Power-On Reset (POR)” on page 168.
3. Internal brown-out (BOR) detector; see “Brown-Out Reset (BOR)” on page 170.
4. Software-initiated reset (with the software reset registers); see “Software Reset” on page 170.
5. A watchdog timer reset condition violation; see “Watchdog Timer Reset” on page 171.
6. MOSC failure; see “Main Oscillator Verification Failure” on page 172.

Table 5-2 provides a summary of results of the various reset operations.

Table 5-2. Reset Sources

Reset Source	Core Reset?	JTAG Reset?	On-Chip Peripherals Reset?
Power-On Reset	Yes	Yes	Yes
$\overline{RST}$	Yes	Pin Config Only	Yes
Brown-Out Reset	Yes	No	Yes
Software System Request Reset[a]	Yes	No	Yes
Software Peripheral Reset	No	No	Yes[b]
Watchdog Reset	Yes	No	Yes
MOSC Failure Reset	Yes	No	Yes

a. By using the SYSRESREQ bit in the ARM Cortex-M3 **Application Interrupt and Reset Control (APINT)** register

b. Programmable on a module-by-module basis using the Software Reset Control Registers.

After a reset, the **Reset Cause (RESC)** register is set with the reset cause. The bits in this register are sticky and maintain their state across multiple reset sequences, except when an internal POR or an external reset is the cause, and then all the other bits in the **RESC** register are cleared except for the POR or EXT indicator.

5.2.2.2 Power-On Reset (POR)

Note: The power-on reset also resets the JTAG controller. An external reset does not.

The internal Power-On Reset (POR) circuit monitors the power supply voltage (V_{DD}) and generates a reset signal to all of the internal logic including JTAG when the power supply ramp reaches a threshold value (V_{TH}). The microcontroller must be operating within the specified operating parameters when the on-chip power-on reset pulse is complete. The 3.3-V power supply to the microcontroller must reach 3.0 V within 10 msec of V_{DD} crossing 2.0 V to guarantee proper operation. For applications that require the use of an external reset signal to hold the microcontroller in reset longer than the internal POR, the $\overline{RST}$ input may be used as discussed in “External $\overline{RST}$ Pin” on page 169.

The Power-On Reset sequence is as follows:

1. The microcontroller waits for internal POR to go inactive.
2. The internal reset is released and the core loads from memory the initial stack pointer, the initial program counter, and the first instruction designated by the program counter, and then begins execution.

The internal POR is only active on the initial power-up of the microcontroller. The Power-On Reset timing is shown in Figure 20-5 on page 680.

5.2.2.3 External $\overline{RST}$ Pin

Note: It is recommended that the trace for the $\overline{RST}$ signal must be kept as short as possible. Be sure to place any components connected to the $\overline{RST}$ signal as close to the microcontroller as possible.

If the application only uses the internal POR circuit, the $\overline{RST}$ input must be connected to the power supply (V_{DD}) through an optional pull-up resistor (0 to 100K Ω) as shown in Figure 5-1 on page 169.

Figure 5-1. Basic $\overline{RST}$ Configuration

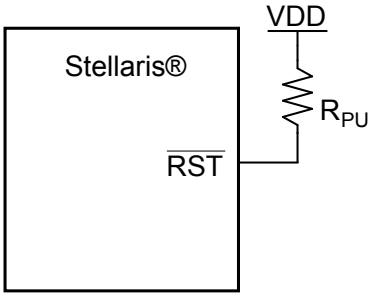

R_{PU} = 0 to 100 kΩ

The external reset pin ($\overline{RST}$) resets the microcontroller including the core and all the on-chip peripherals except the JTAG TAP controller (see “JTAG Interface” on page 155). The external reset sequence is as follows:

1. The external reset pin ($\overline{RST}$) is asserted for the duration specified by T_{MIN} and then de-asserted (see “Reset” on page 679).
2. The internal reset is released and the core loads from memory the initial stack pointer, the initial program counter, and the first instruction designated by the program counter, and then begins execution.

To improve noise immunity and/or to delay reset at power up, the $\overline{RST}$ input may be connected to an RC network as shown in Figure 5-2 on page 169.

Figure 5-2. External Circuitry to Extend Power-On Reset

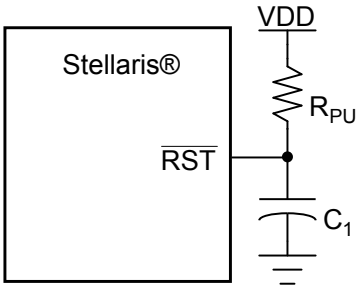

R_{PU} = 1 kΩ to 100 kΩ

C_1 = 1 nF to 10 µF

If the application requires the use of an external reset switch, Figure 5-3 on page 170 shows the proper circuitry to use.

Figure 5-3. Reset Circuit Controlled by Switch

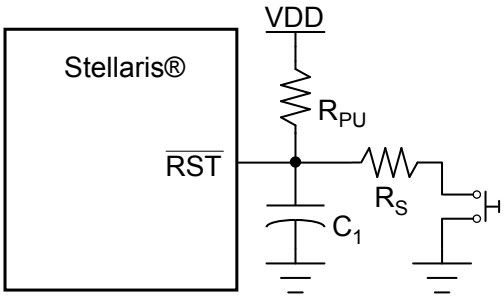

Typical R_{PU} = 10 kΩ

Typical R_S = 470 Ω

C_1 = 10 nF

The R_{PU} and C_1 components define the power-on delay.

The external reset timing is shown in Figure 20-4 on page 679.

5.2.2.4 Brown-Out Reset (BOR)

A drop in the input voltage resulting in the assertion of the internal brown-out detector can be used to reset the controller. This is initially disabled and may be enabled by software.

The system provides a brown-out detection circuit that triggers if the power supply (V_{DD}) drops below a brown-out threshold voltage (V_{BTH}). If a brown-out condition is detected, the system may generate a controller interrupt or a system reset.

Brown-out resets are controlled with the **Power-On and Brown-Out Reset Control (PBORCTL)** register. The `BORIOR` bit in the **PBORCTL** register must be set for a brown-out condition to trigger a reset.

The brown-out reset is equivalent to an assertion of the external $\overline{RST}$ input and the reset is held active until the proper V_{DD} level is restored. The **RESC** register can be examined in the reset interrupt handler to determine if a Brown-Out condition was the cause of the reset, thus allowing software to determine what actions are required to recover.

The internal Brown-Out Reset timing is shown in Figure 20-6 on page 680.

5.2.2.5 Software Reset

Software can reset a specific peripheral or generate a reset to the entire system .

Peripherals can be individually reset by software via three registers that control reset signals to each peripheral (see the **SRCRn** registers). If the bit position corresponding to a peripheral is set and subsequently cleared, the peripheral is reset. The encoding of the reset registers is consistent with the encoding of the clock gating control for peripherals and on-chip functions (see “System Control” on page 177). Note that all reset signals for all clocks of the specified unit are asserted as a result of a software-initiated reset.

The entire system can be reset by software by setting the SYSRESETREQ bit in the Cortex-M3 Application Interrupt and Reset Control register resets the entire system including the core. The software-initiated system reset sequence is as follows:

1. A software system reset is initiated by writing the SYSRESETREQ bit in the ARM Cortex-M3 Application Interrupt and Reset Control register.
2. An internal reset is asserted.
3. The internal reset is deasserted and the controller loads from memory the initial stack pointer, the initial program counter, and the first instruction designated by the program counter, and then begins execution.

The software-initiated system reset timing is shown in Figure 20-7 on page 680.

5.2.2.6 Watchdog Timer Reset

The watchdog timer module's function is to prevent system hangs. The watchdog timer can be configured to generate an interrupt to the controller on its first time-out, and to generate a reset signal on its second time-out.

After the first time-out event, the 32-bit counter is reloaded with the value of the **Watchdog Timer Load (WDTLOAD)** register, and the timer resumes counting down from that value. If the timer counts down to its zero state again before the first time-out interrupt is cleared, and the reset signal has been enabled, the watchdog timer asserts its reset signal to the system. The watchdog timer reset sequence is as follows:

1. The watchdog timer times out for the second time without being serviced.
2. An internal reset is asserted.
3. The internal reset is released and the controller loads from memory the initial stack pointer, the initial program counter, the first instruction designated by the program counter, and begins execution.

The watchdog reset timing is shown in Figure 20-8 on page 680.

5.2.3 Non-Maskable Interrupt

The controller has two sources of non-maskable interrupt (NMI):

- The assertion of the `NMI` signal.
- A main oscillator verification error.

If both sources of NMI are enabled, software must check that the main oscillator verification is the cause of the interrupt in order to distinguish between the two sources.

5.2.3.1 NMI Pin

The alternate function to GPIO port pin B7 is an NMI signal. The alternate function must be enabled in the GPIO for the signal to be used as an interrupt, as described in “General-Purpose Input/Outputs (GPIOs)” on page 324. Note that enabling the NMI alternate function requires the use of the GPIO lock and commit function just like the GPIO port pins associated with JTAG/SWD functionality. The active sense of the NMI signal is High; asserting the enabled NMI signal above V_{IH} initiates the NMI interrupt sequence.

5.2.3.2 Main Oscillator Verification Failure

The main oscillator verification circuit may generate a reset event, at which time a Power-on Reset is generated and control is transferred to the NMI handler. The NMI handler is used to address the main oscillator verification failure because the necessary code can be removed from the general reset handler, speeding up reset processing. The detection circuit is enabled using the `CVAL` bit in the **Main Oscillator Control (MOSCCTL)** register. The main oscillator verification error is indicated in the main oscillator fail status bit (`MOSCFAIL`) bit in the **Reset Cause (RESC)** register. The main oscillator verification circuit action is described in more detail in “Clock Control” on page 172.

5.2.4 Power Control

The Stellaris® microcontroller provides an integrated LDO regulator that is used to provide power to the majority of the controller's internal logic. For power reduction, the LDO regulator provides software a mechanism to adjust the regulated value, in small increments (VSTEP), over the range of 2.25 V to 2.75 V (inclusive)—or 2.5 V ± 10%. The adjustment is made by changing the value of the `VADJ` field in the **LDO Power Control (LDOPCTL)** register.

Note: On the printed circuit board, use the `LDO` output as the source of `VDD25` input. Do not use an external regulator to supply the voltage to `VDD25`. In addition, the LDO requires decoupling capacitors. See “On-Chip Low Drop-Out (LDO) Regulator Characteristics” on page 674.

`VDDA` must be supplied with 3.3 V, or the microcontroller does not function properly. `VDDA` is the supply for all of the analog circuitry on the device, including the clock circuitry.

5.2.5 Clock Control

System control determines the control of clocks in this part.

5.2.5.1 Fundamental Clock Sources

There are multiple clock sources for use in the device:

- **Internal Oscillator (IOSC).** The internal oscillator is an on-chip clock source. It does not require the use of any external components. The frequency of the internal oscillator is 12 MHz ± 30%. Applications that do not depend on accurate clock sources may use this clock source to reduce system cost. The internal oscillator is the clock source the device uses during and following POR. If the main oscillator is required, software must enable the main oscillator following reset and allow the main oscillator to stabilize before changing the clock reference.

- **Main Oscillator (MOSC).** The main oscillator provides a frequency-accurate clock source by one of two means: an external single-ended clock source is connected to the `OSC0` input pin, or an external crystal is connected across the `OSC0` input and `OSC1` output pins. If the PLL is being used, the crystal value must be one of the supported frequencies between 3.579545 MHz through 16.384 MHz (inclusive). If the PLL is not being used, the crystal may be any one of the supported frequencies between 1 MHz and 16.384 MHz. The single-ended clock source range is from DC through the specified speed of the device. The supported crystals are listed in the `XTAL` bit field in the **RCC** register (see page 189).

- **Internal 30-kHz Oscillator.** The internal 30-kHz oscillator is similar to the internal oscillator, except that it provides an operational frequency of 30 kHz ± 50%. It is intended for use during Deep-Sleep power-saving modes. This power-savings mode benefits from reduced internal switching and also allows the main oscillator to be powered down.

The internal system clock (SysClk), is derived from any of the above sources plus two others: the output of the main internal PLL, and the internal oscillator divided by four (3 MHz ± 30%). The

frequency of the PLL clock reference must be in the range of 3.579545 MHz to 16.384 MHz (inclusive). Table 5-3 on page 173 shows how the various clock sources can be used in a system.

Table 5-3. Clock Source Options

Clock Source	Drive PLL?		Used as SysClk?	
Internal Oscillator (12 MHz)	No	BYPASS = 1	Yes	BYPASS = 1, OSCSRC = 0x1
Internal Oscillator divide by 4 (3 MHz)	No	BYPASS = 1	Yes	BYPASS = 1, OSCSRC = 0x2
Main Oscillator	Yes	BYPASS = 0, OSCSRC = 0x0	Yes	BYPASS = 1, OSCSRC = 0x0
Internal 30-kHz Oscillator	No	BYPASS = 1	Yes	BYPASS = 1, OSCSRC = 0x3

5.2.5.2 Clock Configuration

The **Run-Mode Clock Configuration (RCC)** and **Run-Mode Clock Configuration 2 (RCC2)** registers provide control for the system clock. The **RCC2** register is provided to extend fields that offer additional encodings over the **RCC** register. When used, the **RCC2** register field values are used by the logic over the corresponding field in the **RCC** register. In particular, **RCC2** provides for a larger assortment of clock configuration options. These registers control the following clock functionality:

- Source of clocks in sleep and deep-sleep modes
- System clock derived from PLL or other clock source
- Enabling/disabling of oscillators and PLL
- Clock divisors
- Crystal input selection

Figure 5-4 on page 174 shows the logic for the main clock tree. The peripheral blocks are driven by the system clock signal and can be individually enabled/disabled. The ADC clock signal is automatically divided down to 16 MHz for proper ADC operation. The PWM clock signal is a synchronous divide of the system clock to provide the PWM circuit with more range (set with PWMDIV in **RCC**).

Note: When the ADC module is in operation, the system clock must be at least 16 MHz.

Figure 5-4. Main Clock Tree

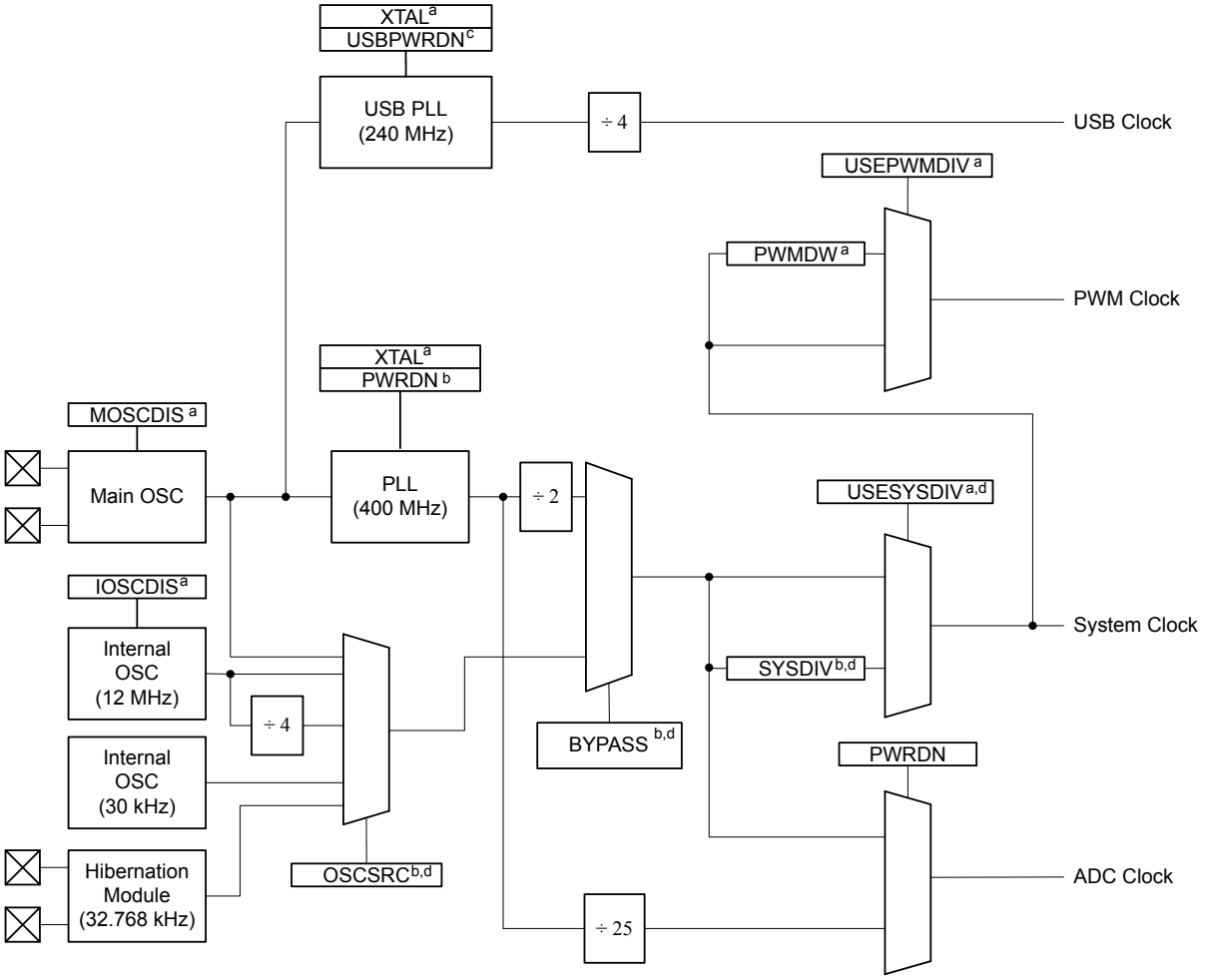

a. Control provided by RCC register bit/field.
b. Control provided by RCC register bit/field or RCC2 register bit/field, if overridden with RCC2 register bit USERCC2.
c. Control provided by RCC2 register bit/field.
d. Also may be controlled by DSLPCLKCFG when in deep sleep mode.

Note: The figure above shows all features available on all Stellaris® DustDevil-class devices. Not all peripherals may be available on this device.

In the **RCC** register, the `SYSDIV` field specifies which divisor is used to generate the system clock from either the PLL output or the oscillator source (depending on how the `BYPASS` bit in this register is configured). When using the PLL, the VCO frequency of 400 MHz is predivided by 2 before the divisor is applied. Table 5-4 shows how the `SYSDIV` encoding affects the system clock frequency, depending on whether the PLL is used (`BYPASS=0`) or another clock source is used (`BYPASS=1`). The divisor is equivalent to the `SYSDIV` encoding plus 1. For a list of possible clock sources, see Table 5-3 on page 173.

Table 5-4. Possible System Clock Frequencies Using the SYSDIV Field

SYSDIV	Divisor	Frequency (BYPASS=0)	Frequency (BYPASS=1)	StellarisWare Parameter[a]
0x0	/1	reserved	Clock source frequency/2	SYSCTL_SYSDIV_1[b]
0x1	/2	reserved	Clock source frequency/2	SYSCTL_SYSDIV_2
0x2	/3	reserved	Clock source frequency/3	SYSCTL_SYSDIV_3
0x3	/4	50 MHz	Clock source frequency/4	SYSCTL_SYSDIV_4
0x4	/5	40 MHz	Clock source frequency/5	SYSCTL_SYSDIV_5
0x5	/6	33.33 MHz	Clock source frequency/6	SYSCTL_SYSDIV_6
0x6	/7	28.57 MHz	Clock source frequency/7	SYSCTL_SYSDIV_7
0x7	/8	25 MHz	Clock source frequency/8	SYSCTL_SYSDIV_8
0x8	/9	22.22 MHz	Clock source frequency/9	SYSCTL_SYSDIV_9
0x9	/10	20 MHz	Clock source frequency/10	SYSCTL_SYSDIV_10
0xA	/11	18.18 MHz	Clock source frequency/11	SYSCTL_SYSDIV_11
0xB	/12	16.67 MHz	Clock source frequency/12	SYSCTL_SYSDIV_12
0xC	/13	15.38 MHz	Clock source frequency/13	SYSCTL_SYSDIV_13
0xD	/14	14.29 MHz	Clock source frequency/14	SYSCTL_SYSDIV_14
0xE	/15	13.33 MHz	Clock source frequency/15	SYSCTL_SYSDIV_15
0xF	/16	12.5 MHz (default)	Clock source frequency/16	SYSCTL_SYSDIV_16

a. This parameter is used in functions such as SysCtlClockSet() in the Stellaris Peripheral Driver Library.

b. SYSCTL_SYSDIV_1 does not set the USESYSDIV bit. As a result, using this parameter without enabling the PLL results in the system clock having the same frequency as the clock source.

The SYSDIV2 field in the **RCC2** register is 2 bits wider than the SYSDIV field in the **RCC** register so that additional larger divisors up to /64 are possible, allowing a lower system clock frequency for improved Deep Sleep power consumption. When using the PLL, the VCO frequency of 400 MHz is predivided by 2 before the divisor is applied. The divisor is equivalent to the SYSDIV2 encoding plus 1. Table 5-5 shows how the SYSDIV2 encoding affects the system clock frequency, depending on whether the PLL is used (BYPASS2=0) or another clock source is used (BYPASS2=1). For a list of possible clock sources, see Table 5-3 on page 173.

Table 5-5. Examples of Possible System Clock Frequencies Using the SYSDIV2 Field

SYSDIV2	Divisor	Frequency (BYPASS2=0)	Frequency (BYPASS2=1)	StellarisWare Parameter[a]
0x00	/1	reserved	Clock source frequency/2	SYSCTL_SYSDIV_1[b]
0x01	/2	reserved	Clock source frequency/2	SYSCTL_SYSDIV_2
0x02	/3	reserved	Clock source frequency/3	SYSCTL_SYSDIV_3
0x03	/4	50 MHz	Clock source frequency/4	SYSCTL_SYSDIV_4
0x04	/5	40 MHz	Clock source frequency/5	SYSCTL_SYSDIV_5
0x05	/6	33.33 MHz	Clock source frequency/6	SYSCTL_SYSDIV_6
0x06	/7	28.57 MHz	Clock source frequency/7	SYSCTL_SYSDIV_7
0x07	/8	25 MHz	Clock source frequency/8	SYSCTL_SYSDIV_8
0x08	/9	22.22 MHz	Clock source frequency/9	SYSCTL_SYSDIV_9
0x09	/10	20 MHz	Clock source frequency/10	SYSCTL_SYSDIV_10
...	...	...	...	...

Table 5-5. Examples of Possible System Clock Frequencies Using the SYSDIV2 Field *(continued)*

SYSDIV2	Divisor	Frequency (BYPASS2=0)	Frequency (BYPASS2=1)	StellarisWare Parameter[a]
0x3F	/64	3.125 MHz	Clock source frequency/64	SYSCTL_SYSDIV_64

a. This parameter is used in functions such as SysCtlClockSet() in the Stellaris Peripheral Driver Library.

b. SYSCTL_SYSDIV_1 does not set the USESYSDIV bit. As a result, using this parameter without enabling the PLL results in the system clock having the same frequency as the clock source.

5.2.5.3 Crystal Configuration for the Main Oscillator (MOSC)

The main oscillator supports the use of a select number of crystals. If the main oscillator is used by the PLL as a reference clock, the supported range of crystals is 3.579545 to 16.384 MHz, otherwise, the range of supported crystals is 1 to 16.384 MHz.

The XTAL bit in the **RCC** register (see page 189) describes the available crystal choices and default programming values.

Software configures the **RCC** register XTAL field with the crystal number. If the PLL is used in the design, the XTAL field value is internally translated to the PLL settings.

5.2.5.4 Main PLL Frequency Configuration

The main PLL is disabled by default during power-on reset and is enabled later by software if required. Software specifies the output divisor to set the system clock frequency, and enables the main PLL to drive the output. The PLL operates at 400 MHz, but is divided by two prior to the application of the output divisor.

If the main oscillator provides the clock reference to the main PLL, the translation provided by hardware and used to program the PLL is available for software in the **XTAL to PLL Translation (PLLCFG)** register (see page 193). The internal translation provides a translation within ± 1% of the targeted PLL VCO frequency. Table 20-8 on page 676 shows the actual PLL frequency and error for a given crystal choice.

The Crystal Value field (XTAL) in the **Run-Mode Clock Configuration (RCC)** register (see page 189) describes the available crystal choices and default programming of the **PLLCFG** register. Any time the XTAL field changes, the new settings are translated and the internal PLL settings are updated.

5.2.5.5 PLL Modes

The PLL hastwo modes of operation: Normal and Power-Down

- Normal: The PLL multiplies the input clock reference and drives the output.
- Power-Down: Most of the PLL internal circuitry is disabled and the PLL does not drive the output.

The modes are programmed using the **RCC**/**RCC2** register fields (see page 189 and page 196).

5.2.5.6 PLL Operation

If a PLL configuration is changed, the PLL output frequency is unstable until it reconverges (relocks) to the new setting. The time between the configuration change and relock is T_{READY} (see Table 20-7 on page 676). During the relock time, the affected PLL is not usable as a clock reference.

The PLL is changed by one of the following:

- Change to the XTAL value in the **RCC** register—writes of the same value do not cause a relock.

- Change in the PLL from Power-Down to Normal mode.

A counter is defined to measure the T_{READY} requirement. The counter is clocked by the main oscillator. The range of the main oscillator has been taken into account and the down counter is set to 0x1200 (that is, ~600 µs at an 8.192 MHz external oscillator clock). When the XTAL value is greater than 0x0f, the down counter is set to 0x2400 to maintain the required lock time on higher frequency crystal inputs. Hardware is provided to keep the PLL from being used as a system clock until the T_{READY} condition is met after one of the two changes above. It is the user's responsibility to have a stable clock source (like the main oscillator) before the **RCC**/**RCC2** register is switched to use the PLL.

If the main PLL is enabled and the system clock is switched to use the PLL in one step, the system control hardware continues to clock the controller from the oscillator selected by the **RCC**/**RCC2** register until the main PLL is stable (T_{READY} time met), after which it changes to the PLL. Software can use many methods to ensure that the system is clocked from the main PLL, including periodically polling the `PLLLRIS` bit in the **Raw Interrupt Status (RIS)** register, and enabling the PLL Lock interrupt.

5.2.5.7 Main Oscillator Verification Circuit

A circuit is added to ensure that the main oscillator is running at the appropriate frequency. The circuit monitors the main oscillator frequency and signals if the frequency is outside of the allowable band of attached crystals.

The detection circuit is enabled using the `CVAL` bit in the **Main Oscillator Control (MOSCCTL)** register. If this circuit is enabled and detects an error, the following sequence is performed by the hardware:

1. The `MOSCFAIL` bit in the **Reset Cause (RESC)** register is set.
2. If the internal oscillator (IOSC) is disabled, it is enabled.
3. The system clock is switched from the main oscillator to the IOSC.
4. An internal power-on reset is initiated that lasts for 32 IOSC periods.
5. Reset is de-asserted and the processor is directed to the NMI handler during the reset sequence.

5.2.6 System Control

For power-savings purposes, the **RCGCn** , **SCGCn** , and **DCGCn** registers control the clock gating logic for each peripheral or block in the system while the controller is in Run, Sleep, and Deep-Sleep mode, respectively.

There are four levels of operation for the device defined as:

- **Run Mode.** In Run mode, the controller actively executes code. Run mode provides normal operation of the processor and all of the peripherals that are currently enabled by the **RCGCn** registers. The system clock can be any of the available clock sources including the PLL.
- **Sleep Mode.** In Sleep mode, the clock frequency of the active peripherals is unchanged, but the processor and the memory subsystem are not clocked and therefore no longer execute code. Sleep mode is entered by the Cortex-M3 core executing a `WFI(Wait for Interrupt)` instruction. Any properly configured interrupt event in the system will bring the processor back into Run mode. See “Power Management” on page 86 for more details.

Peripherals are clocked that are enabled in the **SCGCn** register when auto-clock gating is enabled (see the **RCC** register) or the **RCGCn** register when the auto-clock gating is disabled. The system clock has the same source and frequency as that during Run mode.

- **Deep-Sleep Mode.** In Deep-Sleep mode, the clock frequency of the active peripherals may change (depending on the Run mode clock configuration) in addition to the processor clock being stopped. An interrupt returns the device to Run mode from one of the sleep modes; the sleep modes are entered on request from the code. Deep-Sleep mode is entered by first writing the Deep Sleep Enable bit in the ARM Cortex-M3 NVIC system control register and then executing a `WFI` instruction. Any properly configured interrupt event in the system will bring the processor back into Run mode. See "Power Management" on page 86 for more details.

  The Cortex-M3 processor core and the memory subsystem are not clocked. Peripherals are clocked that are enabled in the **DCGCn** register when auto-clock gating is enabled (see the **RCC** register) or the **RCGCn** register when auto-clock gating is disabled. The system clock source is the main oscillator by default or the internal oscillator specified in the **DSLPCLKCFG** register if one is enabled. When the **DSLPCLKCFG** register is used, the internal oscillator is powered up, if necessary, and the main oscillator is powered down. If the PLL is running at the time of the WFI instruction, hardware will power the PLL down and override the `SYSDIV` field of the active **RCC**/**RCC2** register, to be determined by the `DSDIVORIDE` setting in the **DSLPCLKCFG** register, up to /16 or /64 respectively. When the Deep-Sleep exit event occurs, hardware brings the system clock back to the source and frequency it had at the onset of Deep-Sleep mode before enabling the clocks that had been stopped during the Deep-Sleep duration.

Caution – If the Cortex-M3 Debug Access Port (DAP) has been enabled, and the device wakes from a low power sleep or deep-sleep mode, the core may start executing code before all clocks to peripherals have been restored to their run mode configuration. The DAP is usually enabled by software tools accessing the JTAG or SWD interface when debugging or flash programming. If this condition occurs, a Hard Fault is triggered when software accesses a peripheral with an invalid clock.

A software delay loop can be used at the beginning of the interrupt routine that is used to wake up a system from a WFI (Wait For Interrupt) instruction. This stalls the execution of any code that accesses a peripheral register that might cause a fault. This loop can be removed for production software as the DAP is most likely not enabled during normal execution.

Because the DAP is disabled by default (power on reset), the user can also power-cycle the device. The DAP is not enabled unless it is enabled through the JTAG or SWD interface.

5.3 Initialization and Configuration

The PLL is configured using direct register writes to the **RCC**/**RCC2** register. If the **RCC2** register is being used, the `USERCC2` bit must be set and the appropriate **RCC2** bit/field is used. The steps required to successfully change the PLL-based system clock are:

1. Bypass the PLL and system clock divider by setting the `BYPASS` bit and clearing the `USESYS` bit in the **RCC** register. This configures the system to run off a "raw" clock source and allows for the new PLL configuration to be validated before switching the system clock to the PLL.

2. Select the crystal value (`XTAL`) and oscillator source (`OSCSRC`), and clear the `PWRDN` bit in **RCC**/**RCC2**. Setting the `XTAL` field automatically pulls valid PLL configuration data for the appropriate crystal, and clearing the `PWRDN` bit powers and enables the PLL and its output.

3. Select the desired system divider (`SYSDIV`) in **RCC**/**RCC2** and set the `USESYS` bit in **RCC**. The `SYSDIV` field determines the system frequency for the microcontroller.

4. Wait for the PLL to lock by polling the `PLLLRIS` bit in the **Raw Interrupt Status (RIS)** register.
5. Enable use of the PLL by clearing the `BYPASS` bit in **RCC**/**RCC2**.

5.4 Register Map

Table 5-6 on page 179 lists the System Control registers, grouped by function. The offset listed is a hexadecimal increment to the register's address, relative to the System Control base address of 0x400F.E000.

Note: Spaces in the System Control register space that are not used are reserved for future or internal use. Software should not modify any reserved memory address.

Note: Additional Flash and ROM registers defined in the System Control register space are described in the “Internal Memory” on page 233.

Table 5-6. System Control Register Map

Offset	Name	Type	Reset	Description	See page
0x000	DID0	RO	-	Device Identification 0	181
0x004	DID1	RO	-	Device Identification 1	200
0x008	DC0	RO	0x007F.003F	Device Capabilities 0	202
0x010	DC1	RO	0x0111.32BF	Device Capabilities 1	203
0x014	DC2	RO	0x000F.0111	Device Capabilities 2	205
0x018	DC3	RO	0x83FF.800F	Device Capabilities 3	206
0x01C	DC4	RO	0x0000.301F	Device Capabilities 4	208
0x020	DC5	RO	0x0330.000F	Device Capabilities 5	209
0x024	DC6	RO	0x0000.0000	Device Capabilities 6	210
0x028	DC7	RO	0x4000.0F00	Device Capabilities 7	211
0x030	PBORCTL	R/W	0x0000.7FFD	Brown-Out Reset Control	183
0x034	LDOPCTL	R/W	0x0000.0000	LDO Power Control	184
0x040	SRCR0	R/W	0x00000000	Software Reset Control 0	230
0x044	SRCR1	R/W	0x00000000	Software Reset Control 1	231
0x048	SRCR2	R/W	0x00000000	Software Reset Control 2	232
0x050	RIS	RO	0x0000.0000	Raw Interrupt Status	185
0x054	IMC	R/W	0x0000.0000	Interrupt Mask Control	186
0x058	MISC	R/W1C	0x0000.0000	Masked Interrupt Status and Clear	187
0x05C	RESC	R/W	-	Reset Cause	188
0x060	RCC	R/W	0x078E.3AD1	Run-Mode Clock Configuration	189
0x064	PLLCFG	RO	-	XTAL to PLL Translation	193
0x06C	GPIOHBCTL	R/W	0x0000.0000	GPIO High-Performance Bus Control	194

Table 5-6. System Control Register Map *(continued)*

Offset	Name	Type	Reset	Description	See page
0x070	RCC2	R/W	0x0780.6810	Run-Mode Clock Configuration 2	196
0x07C	MOSCCTL	R/W	0x0000.0000	Main Oscillator Control	198
0x100	RCGC0	R/W	0x00000040	Run Mode Clock Gating Control Register 0	212
0x104	RCGC1	R/W	0x00000000	Run Mode Clock Gating Control Register 1	218
0x108	RCGC2	R/W	0x00000000	Run Mode Clock Gating Control Register 2	224
0x110	SCGC0	R/W	0x00000040	Sleep Mode Clock Gating Control Register 0	214
0x114	SCGC1	R/W	0x00000000	Sleep Mode Clock Gating Control Register 1	220
0x118	SCGC2	R/W	0x00000000	Sleep Mode Clock Gating Control Register 2	226
0x120	DCGC0	R/W	0x00000040	Deep Sleep Mode Clock Gating Control Register 0	216
0x124	DCGC1	R/W	0x00000000	Deep Sleep Mode Clock Gating Control Register 1	222
0x128	DCGC2	R/W	0x00000000	Deep Sleep Mode Clock Gating Control Register 2	228
0x144	DSLPCLKCFG	R/W	0x0780.0000	Deep Sleep Clock Configuration	199

5.5 Register Descriptions

All addresses given are relative to the System Control base address of 0x400F.E000.

Register 1: Device Identification 0 (DID0), offset 0x000

This register identifies the version of the microcontroller. Each microcontroller is uniquely identified by the combined values of the `CLASS` field in the **DID0** register and the `PARTNO` field in the **DID1** register.

Device Identification 0 (DID0)

Base 0x400F.E000
Offset 0x000
Type RO, reset -

	31	30	29	28	27	26	25	24	23	22	21	20	19	18	17	16
	reserved	VER			reserved				CLASS							
Type	RO	RO	RO	RO	RO	RO	RO	RO	RO	RO	RO	RO	RO	RO	RO	RO
Reset	0	0	0	1	0	0	0	0	0	0	0	0	0	0	1	1

	15	14	13	12	11	10	9	8	7	6	5	4	3	2	1	0
	MAJOR								MINOR							
Type	RO	RO	RO	RO	RO	RO	RO	RO	RO	RO	RO	RO	RO	RO	RO	RO
Reset	-	-	-	-	-	-	-	-	-	-	-	-	-	-	-	-

Bit/Field	Name	Type	Reset	Description
31	reserved	RO	0	Software should not rely on the value of a reserved bit. To provide compatibility with future products, the value of a reserved bit should be preserved across a read-modify-write operation.
30:28	VER	RO	0x1	DID0 Version This field defines the **DID0** register format version. The version number is numeric. The value of the `VER` field is encoded as follows: Value Description 0x1 Second version of the **DID0** register format.
27:24	reserved	RO	0x0	Software should not rely on the value of a reserved bit. To provide compatibility with future products, the value of a reserved bit should be preserved across a read-modify-write operation.
23:16	CLASS	RO	0x3	Device Class The `CLASS` field value identifies the internal design from which all mask sets are generated for all devices in a particular product line. The `CLASS` field value is changed for new product lines, for changes in fab process (for example, a remap or shrink), or any case where the `MAJOR` or `MINOR` fields require differentiation from prior devices. The value of the `CLASS` field is encoded as follows (all other encodings are reserved): Value Description 0x3 Stellaris® DustDevil-class devices

Bit/Field	Name	Type	Reset	Description
15:8	MAJOR	RO	-	Major Revision This field specifies the major revision number of the device. The major revision reflects changes to base layers of the design. The major revision number is indicated in the part number as a letter (A for first revision, B for second, and so on). This field is encoded as follows: Value Description 0x0 Revision A (initial device) 0x1 Revision B (first base layer revision) 0x2 Revision C (second base layer revision) and so on.
7:0	MINOR	RO	-	Minor Revision This field specifies the minor revision number of the device. The minor revision reflects changes to the metal layers of the design. The `MINOR` field value is reset when the `MAJOR` field is changed. This field is numeric and is encoded as follows: Value Description 0x0 Initial device, or a major revision update. 0x1 First metal layer change. 0x2 Second metal layer change. and so on.

Register 2: Brown-Out Reset Control (PBORCTL), offset 0x030

This register is responsible for controlling reset conditions after initial power-on reset.

Brown-Out Reset Control (PBORCTL)

Base 0x400F.E000
Offset 0x030
Type R/W, reset 0x0000.7FFD

	31	30	29	28	27	26	25	24	23	22	21	20	19	18	17	16
	reserved															
Type	RO	RO	RO	RO	RO	RO	RO	RO	RO	RO	RO	RO	RO	RO	RO	RO
Reset	0	0	0	0	0	0	0	0	0	0	0	0	0	0	0	0

	15	14	13	12	11	10	9	8	7	6	5	4	3	2	1	0
	reserved														BORIOR	reserved
Type	RO	RO	RO	RO	RO	RO	RO	RO	RO	RO	RO	RO	RO	RO	R/W	RO
Reset	0	0	0	0	0	0	0	0	0	0	0	0	0	0	0	0

Bit/Field	Name	Type	Reset	Description
31:2	reserved	RO	0x0	Software should not rely on the value of a reserved bit. To provide compatibility with future products, the value of a reserved bit should be preserved across a read-modify-write operation.
1	BORIOR	R/W	0	BOR Interrupt or Reset This bit controls how a BOR event is signaled to the controller. If set, a reset is signaled. Otherwise, an interrupt is signaled.
0	reserved	RO	0	Software should not rely on the value of a reserved bit. To provide compatibility with future products, the value of a reserved bit should be preserved across a read-modify-write operation.

Register 3: LDO Power Control (LDOPCTL), offset 0x034

The VADJ field in this register adjusts the on-chip output voltage (V_{OUT}).

LDO Power Control (LDOPCTL)

Base 0x400F.E000
Offset 0x034
Type R/W, reset 0x0000.0000

	31	30	29	28	27	26	25	24	23	22	21	20	19	18	17	16
	reserved															
Type	RO	RO	RO	RO	RO	RO	RO	RO	RO	RO	RO	RO	RO	RO	RO	RO
Reset	0	0	0	0	0	0	0	0	0	0	0	0	0	0	0	0

	15	14	13	12	11	10	9	8	7	6	5	4	3	2	1	0
	reserved										VADJ					
Type	RO	RO	RO	RO	RO	RO	RO	RO	RO	RO	R/W	R/W	R/W	R/W	R/W	R/W
Reset	0	0	0	0	0	0	0	0	0	0	0	0	0	0	0	0

Bit/Field	Name	Type	Reset	Description
31:6	reserved	RO	0	Software should not rely on the value of a reserved bit. To provide compatibility with future products, the value of a reserved bit should be preserved across a read-modify-write operation.
5:0	VADJ	R/W	0x0	LDO Output Voltage This field sets the on-chip output voltage. The programming values for the VADJ field are provided below.

Value	V_{OUT} (V)
0x00	2.50
0x01	2.45
0x02	2.40
0x03	2.35
0x04	2.30
0x05	2.25
0x06-0x3F	Reserved
0x1B	2.75
0x1C	2.70
0x1D	2.65
0x1E	2.60
0x1F	2.55

Register 4: Raw Interrupt Status (RIS), offset 0x050

Central location for system control raw interrupts. These are set and cleared by hardware.

Raw Interrupt Status (RIS)

Base 0x400F.E000
Offset 0x050
Type RO, reset 0x0000.0000

	31	30	29	28	27	26	25	24	23	22	21	20	19	18	17	16
	reserved															
Type	RO	RO	RO	RO	RO	RO	RO	RO	RO	RO	RO	RO	RO	RO	RO	RO
Reset	0	0	0	0	0	0	0	0	0	0	0	0	0	0	0	0

	15	14	13	12	11	10	9	8	7	6	5	4	3	2	1	0
	reserved							MOSCPUPRIS	reserved	PLLLRIS	reserved				BORRIS	reserved
Type	RO	RO	RO	RO	RO	RO	RO	RO	RO	RO	RO	RO	RO	RO	RO	RO
Reset	0	0	0	0	0	0	0	0	0	0	0	0	0	0	0	0

Bit/Field	Name	Type	Reset	Description
31:9	reserved	RO	0	Software should not rely on the value of a reserved bit. To provide compatibility with future products, the value of a reserved bit should be preserved across a read-modify-write operation.
8	MOSCPUPRIS	RO	0	MOSC Power Up Raw Interrupt Status This bit is set when the PLL $T_{MOSCPUP}$ Timer asserts.
7	reserved	RO	0	Software should not rely on the value of a reserved bit. To provide compatibility with future products, the value of a reserved bit should be preserved across a read-modify-write operation.
6	PLLLRIS	RO	0	PLL Lock Raw Interrupt Status This bit is set when the PLL T_{READY} Timer asserts.
5:2	reserved	RO	0	Software should not rely on the value of a reserved bit. To provide compatibility with future products, the value of a reserved bit should be preserved across a read-modify-write operation.
1	BORRIS	RO	0	Brown-Out Reset Raw Interrupt Status This bit is the raw interrupt status for any brown-out conditions. If set, a brown-out condition is currently active. This is an unregistered signal from the brown-out detection circuit. An interrupt is reported if the `BORIM` bit in the **IMC** register is set and the `BORIOR` bit in the **PBORCTL** register is cleared.
0	reserved	RO	0	Software should not rely on the value of a reserved bit. To provide compatibility with future products, the value of a reserved bit should be preserved across a read-modify-write operation.

Register 5: Interrupt Mask Control (IMC), offset 0x054

Central location for system control interrupt masks.

Interrupt Mask Control (IMC)

Base 0x400F.E000
Offset 0x054
Type R/W, reset 0x0000.0000

	31	30	29	28	27	26	25	24	23	22	21	20	19	18	17	16
	reserved															
Type	RO	RO	RO	RO	RO	RO	RO	RO	RO	RO	RO	RO	RO	RO	RO	RO
Reset	0	0	0	0	0	0	0	0	0	0	0	0	0	0	0	0

	15	14	13	12	11	10	9	8	7	6	5	4	3	2	1	0
	reserved							MOSCPUPIM	reserved	PLLLIM	reserved				BORIM	reserved
Type	RO	RO	RO	RO	RO	RO	RO	R/W	RO	R/W	RO	RO	RO	RO	R/W	RO
Reset	0	0	0	0	0	0	0	0	0	0	0	0	0	0	0	0

Bit/Field	Name	Type	Reset	Description
31:9	reserved	RO	0	Software should not rely on the value of a reserved bit. To provide compatibility with future products, the value of a reserved bit should be preserved across a read-modify-write operation.
8	MOSCPUPIM	R/W	0	MOSC Power Up Interrupt Mask This bit specifies whether a MOSC power up intterupt is promoted to a controller interrupt. If set, an interrupt is generated if `MOSCPUPRIS` in **RIS** is set; otherwise, an interrupt is not generated.
7	reserved	RO	0	Software should not rely on the value of a reserved bit. To provide compatibility with future products, the value of a reserved bit should be preserved across a read-modify-write operation.
6	PLLLIM	R/W	0	PLL Lock Interrupt Mask This bit specifies whether a PLL Lock interrupt is promoted to a controller interrupt. If set, an interrupt is generated if `PLLLRIS` in **RIS** is set; otherwise, an interrupt is not generated.
5:2	reserved	RO	0	Software should not rely on the value of a reserved bit. To provide compatibility with future products, the value of a reserved bit should be preserved across a read-modify-write operation.
1	BORIM	R/W	0	Brown-Out Reset Interrupt Mask This bit specifies whether a brown-out condition is promoted to a controller interrupt. If set, an interrupt is generated if `BORRIS` is set; otherwise, an interrupt is not generated.
0	reserved	RO	0	Software should not rely on the value of a reserved bit. To provide compatibility with future products, the value of a reserved bit should be preserved across a read-modify-write operation.

Register 6: Masked Interrupt Status and Clear (MISC), offset 0x058

On a read, this register gives the current masked status value of the corresponding interrupt. All of the bits are R/W1C and this action also clears the corresponding raw interrupt bit in the **RIS** register (see page 185).

Masked Interrupt Status and Clear (MISC)

Base 0x400F.E000
Offset 0x058
Type R/W1C, reset 0x0000.0000

	31	30	29	28	27	26	25	24	23	22	21	20	19	18	17	16
	reserved															
Type	RO	RO	RO	RO	RO	RO	RO	RO	RO	RO	RO	RO	RO	RO	RO	RO
Reset	0	0	0	0	0	0	0	0	0	0	0	0	0	0	0	0

	15	14	13	12	11	10	9	8	7	6	5	4	3	2	1	0
	reserved							MOSCPUPMIS	reserved	PLLLMIS	reserved				BORMIS	reserved
Type	RO	RO	RO	RO	RO	RO	RO	R/W1C	RO	R/W1C	RO	RO	RO	RO	R/W1C	RO
Reset	0	0	0	0	0	0	0	0	0	0	0	0	0	0	0	0

Bit/Field	Name	Type	Reset	Description
31:9	reserved	RO	0	Software should not rely on the value of a reserved bit. To provide compatibility with future products, the value of a reserved bit should be preserved across a read-modify-write operation.
8	MOSCPUPMIS	R/W1C	0	MOSC Power Up Masked Interrupt Status This bit is set when the $T_{MOSCPUP}$ timer asserts. The interrupt is cleared by writing a 1 to this bit.
7	reserved	RO	0	Software should not rely on the value of a reserved bit. To provide compatibility with future products, the value of a reserved bit should be preserved across a read-modify-write operation.
6	PLLLMIS	R/W1C	0	PLL Lock Masked Interrupt Status This bit is set when the PLL T_{READY} timer asserts. The interrupt is cleared by writing a 1 to this bit.
5:2	reserved	RO	0	Software should not rely on the value of a reserved bit. To provide compatibility with future products, the value of a reserved bit should be preserved across a read-modify-write operation.
1	BORMIS	R/W1C	0	BOR Masked Interrupt Status The `BORMIS` is simply the `BORRIS` ANDed with the mask value, `BORIM`.
0	reserved	RO	0	Software should not rely on the value of a reserved bit. To provide compatibility with future products, the value of a reserved bit should be preserved across a read-modify-write operation.

Register 7: Reset Cause (RESC), offset 0x05C

This register is set with the reset cause after reset. The bits in this register are sticky and maintain their state across multiple reset sequences, except when a power- on reset or an external reset is the cause, in which case, all bits other than POR or EXT in the **RESC** register are cleared.

Reset Cause (RESC)

Base 0x400F.E000
Offset 0x05C
Type R/W, reset -

	31	30	29	28	27	26	25	24	23	22	21	20	19	18	17	16
	reserved															MOSCFAIL
Type	RO	RO	RO	RO	RO	RO	RO	RO	RO	RO	RO	RO	RO	RO	RO	R/W
Reset	0	0	0	0	0	0	0	0	0	0	0	0	0	0	0	-

	15	14	13	12	11	10	9	8	7	6	5	4	3	2	1	0
	reserved											SW	WDT	BOR	POR	EXT
Type	RO	RO	RO	RO	RO	RO	RO	RO	RO	RO	RO	R/W	R/W	R/W	R/W	R/W
Reset	0	0	0	0	0	0	0	0	0	0	0	-	-	-	-	-

Bit/Field	Name	Type	Reset	Description
31:17	reserved	RO	0	Software should not rely on the value of a reserved bit. To provide compatibility with future products, the value of a reserved bit should be preserved across a read-modify-write operation.
16	MOSCFAIL	R/W	-	MOSC Failure Reset When set, indicates the MOSC circuit was enable for clock validation and failed. This generated a reset event.
15:5	reserved	RO	0	Software should not rely on the value of a reserved bit. To provide compatibility with future products, the value of a reserved bit should be preserved across a read-modify-write operation.
4	SW	R/W	-	Software Reset When set, indicates a software reset is the cause of the reset event.
3	WDT	R/W	-	Watchdog Timer Reset When set, indicates a watchdog reset is the cause of the reset event.
2	BOR	R/W	-	Brown-Out Reset When set, indicates a brown-out reset is the cause of the reset event.
1	POR	R/W	-	Power-On Reset When set, indicates a power-on reset is the cause of the reset event.
0	EXT	R/W	-	External Reset When set, indicates an external reset ($\overline{\text{RST}}$ assertion) is the cause of the reset event.

Register 8: Run-Mode Clock Configuration (RCC), offset 0x060

This register is defined to provide source control and frequency speed.

Run-Mode Clock Configuration (RCC)

Base 0x400F.E000
Offset 0x060
Type R/W, reset 0x078E.3AD1

	31	30	29	28	27	26	25	24	23	22	21	20	19	18	17	16
	reserved				ACG	SYSDIV				USESYSDIV	reserved	USEPWMDIV	PWMDIV			reserved
Type	RO	RO	RO	RO	R/W	R/W	R/W	R/W	R/W	R/W	RO	R/W	R/W	R/W	R/W	RO
Reset	0	0	0	0	0	1	1	1	1	0	0	0	1	1	1	0

	15	14	13	12	11	10	9	8	7	6	5	4	3	2	1	0
	reserved		PWRDN	reserved	BYPASS	XTAL					OSCSRC		reserved		IOSCDIS	MOSCDIS
Type	RO	RO	R/W	RO	R/W	R/W	R/W	R/W	R/W	R/W	R/W	R/W	RO	RO	R/W	R/W
Reset	0	0	1	1	1	0	1	0	1	1	0	1	0	0	0	1

Bit/Field	Name	Type	Reset	Description
31:28	reserved	RO	0x0	Software should not rely on the value of a reserved bit. To provide compatibility with future products, the value of a reserved bit should be preserved across a read-modify-write operation.
27	ACG	R/W	0	Auto Clock Gating This bit specifies whether the system uses the **Sleep-Mode Clock Gating Control (SCGCn)** registers and **Deep-Sleep-Mode Clock Gating Control (DCGCn)** registers if the controller enters a Sleep or Deep-Sleep mode (respectively). If set, the **SCGCn** or **DCGCn** registers are used to control the clocks distributed to the peripherals when the controller is in a sleep mode. Otherwise, the **Run-Mode Clock Gating Control (RCGCn)** registers are used when the controller enters a sleep mode. The **RCGCn** registers are always used to control the clocks in Run mode. This allows peripherals to consume less power when the controller is in a sleep mode and the peripheral is unused.
26:23	SYSDIV	R/W	0xF	System Clock Divisor Specifies which divisor is used to generate the system clock from either the PLL output or the oscillator source (depending on how the `BYPASS` bit in this register is configured). See Table 5-4 on page 175 for bit encodings. If the `SYSDIV` value is less than `MINSYSDIV` (see page 203), and the PLL is being used, then the `MINSYSDIV` value is used as the divisor. If the PLL is not being used, the `SYSDIV` value can be less than `MINSYSDIV`.
22	USESYSDIV	R/W	0	Enable System Clock Divider Use the system clock divider as the source for the system clock. The system clock divider is forced to be used when the PLL is selected as the source. If the `USERCC2` bit in the **RCC2** register is set, then the `SYSDIV2` field in the **RCC2** register is used as the system clock divider rather than the `SYSDIV` field in this register.

Bit/Field	Name	Type	Reset	Description
21	reserved	RO	0	Software should not rely on the value of a reserved bit. To provide compatibility with future products, the value of a reserved bit should be preserved across a read-modify-write operation.
20	USEPWMDIV	R/W	0	Enable PWM Clock Divisor Use the PWM clock divider as the source for the PWM clock.
19:17	PWMDIV	R/W	0x7	PWM Unit Clock Divisor This field specifies the binary divisor used to predivide the system clock down for use as the timing reference for the PWM module. This clock is only power 2 divide and rising edge is synchronous without phase shift from the system clock. Value Divisor 0x0 /2 0x1 /4 0x2 /8 0x3 /16 0x4 /32 0x5 /64 0x6 /64 0x7 /64 (default)
16:14	reserved	RO	0	Software should not rely on the value of a reserved bit. To provide compatibility with future products, the value of a reserved bit should be preserved across a read-modify-write operation.
13	PWRDN	R/W	1	PLL Power Down This bit connects to the PLL PWRDN input. The reset value of 1 powers down the PLL.
12	reserved	RO	1	Software should not rely on the value of a reserved bit. To provide compatibility with future products, the value of a reserved bit should be preserved across a read-modify-write operation.
11	BYPASS	R/W	1	PLL Bypass Chooses whether the system clock is derived from the PLL output or the OSC source. If set, the clock that drives the system is the OSC source. Otherwise, the clock that drives the system is the PLL output clock divided by the system divider. See Table 5-4 on page 175 for programming guidelines. **Note:** The ADC must be clocked from the PLL or directly from a 14-MHz to 18-MHz clock source to operate properly. While the ADC works in a 14-18 MHz range, to maintain a 1 M sample/second rate, the ADC must be provided a 16-MHz clock source.

Bit/Field	Name	Type	Reset	Description
10:6	XTAL	R/W	0xB	Crystal Value This field specifies the crystal value attached to the main oscillator. The encoding for this field is provided below. Depending on the crystal used, the PLL frequency may not be exactly 400 MHz (see Table 20-8 on page 676 for more information).

Value	Crystal Frequency (MHz) Not Using the PLL	Crystal Frequency (MHz) Using the PLL
0x00	1.000	reserved
0x01	1.8432	reserved
0x02	2.000	reserved
0x03	2.4576	reserved
0x04	3.579545 MHz	
0x05	3.6864 MHz	
0x06	4 MHz	
0x07	4.096 MHz	
0x08	4.9152 MHz	
0x09	5 MHz	
0x0A	5.12 MHz	
0x0B	6 MHz (reset value)	
0x0C	6.144 MHz	
0x0D	7.3728 MHz	
0x0E	8 MHz	
0x0F	8.192 MHz	
0x10	10.0 MHz	
0x11	12.0 MHz	
0x12	12.288 MHz	
0x13	13.56 MHz	
0x14	14.31818 MHz	
0x15	16.0 MHz	
0x16	16.384 MHz	

Bit/Field	Name	Type	Reset	Description
5:4	OSCSRC	R/W	0x1	Oscillator Source Selects the input source for the OSC. The values are:

Value	Input Source
0x0	MOSC Main oscillator
0x1	IOSC Internal oscillator (default)
0x2	IOSC/4 Internal oscillator / 4
0x3	30 kHz 30-KHz internal oscillator

For additional oscillator sources, see the **RCC2** register.

Bit/Field	Name	Type	Reset	Description
3:2	reserved	RO	0x0	Software should not rely on the value of a reserved bit. To provide compatibility with future products, the value of a reserved bit should be preserved across a read-modify-write operation.
1	IOSCDIS	R/W	0	Internal Oscillator Disable 0: Internal oscillator (IOSC) is enabled. 1: Internal oscillator is disabled.
0	MOSCDIS	R/W	1	Main Oscillator Disable 0: Main oscillator is enabled . 1: Main oscillator is disabled (default).

Register 9: XTAL to PLL Translation (PLLCFG), offset 0x064

This register provides a means of translating external crystal frequencies into the appropriate PLL settings. This register is initialized during the reset sequence and updated anytime that the XTAL field changes in the **Run-Mode Clock Configuration (RCC)** register (see page 189).

The PLL frequency is calculated using the **PLLCFG** field values, as follows:

```
PLLFreq = OSCFreq * F / (R + 1)
```

XTAL to PLL Translation (PLLCFG)

Base 0x400F.E000
Offset 0x064
Type RO, reset -

	31	30	29	28	27	26	25	24	23	22	21	20	19	18	17	16
	reserved															
Type	RO	RO	RO	RO	RO	RO	RO	RO	RO	RO	RO	RO	RO	RO	RO	RO
Reset	0	0	0	0	0	0	0	0	0	0	0	0	0	0	0	0

	15	14	13	12	11	10	9	8	7	6	5	4	3	2	1	0
	reserved		F									R				
Type	RO	RO	RO	RO	RO	RO	RO	RO	RO	RO	RO	RO	RO	RO	RO	RO
Reset	0	0	-	-	-	-	-	-	-	-	-	-	-	-	-	-

Bit/Field	Name	Type	Reset	Description
31:14	reserved	RO	0x0	Software should not rely on the value of a reserved bit. To provide compatibility with future products, the value of a reserved bit should be preserved across a read-modify-write operation.
13:5	F	RO	-	PLL F Value This field specifies the value supplied to the PLL's F input.
4:0	R	RO	-	PLL R Value This field specifies the value supplied to the PLL's R input.

Register 10: GPIO High-Performance Bus Control (GPIOHBCTL), offset 0x06C

This register controls which internal bus is used to access each GPIO port. When a bit is clear, the corresponding GPIO port is accessed across the legacy Advanced Peripheral Bus (APB) bus and through the APB memory aperture. When a bit is set, the corresponding port is accessed across the Advanced High-Performance Bus (AHB) bus and through the AHB memory aperture. Each GPIO port can be individually configured to use AHB or APB, but may be accessed only through one aperture. The AHB bus provides better back-to-back access performance than the APB bus. The address aperture in the memory map changes for the ports that are enabled for AHB access (see Table 8-6 on page 333).

GPIO High-Performance Bus Control (GPIOHBCTL)

Base 0x400F.E000
Offset 0x06C
Type R/W, reset 0x0000.0000

	31	30	29	28	27	26	25	24	23	22	21	20	19	18	17	16
	reserved															
Type	RO	RO	RO	RO	RO	RO	RO	RO	RO	RO	RO	RO	RO	RO	RO	RO
Reset	0	0	0	0	0	0	0	0	0	0	0	0	0	0	0	0

	15	14	13	12	11	10	9	8	7	6	5	4	3	2	1	0
	reserved											PORTE	PORTD	PORTC	PORTB	PORTA
Type	RO	RO	RO	RO	RO	RO	RO	RO	RO	RO	RO	R/W	R/W	R/W	R/W	R/W
Reset	0	0	0	0	0	0	0	0	0	0	0	0	0	0	0	0

Bit/Field	Name	Type	Reset	Description
31:5	reserved	RO	0x0000.0	Software should not rely on the value of a reserved bit. To provide compatibility with future products, the value of a reserved bit should be preserved across a read-modify-write operation.
4	PORTE	R/W	0	Port E Advanced High-Performance Bus This bit defines the memory aperture for Port E. Value Description 1 Advanced High-Performance Bus (AHB) 0 Advanced Peripheral Bus (APB). This bus is the legacy bus.
3	PORTD	R/W	0	Port D Advanced High-Performance Bus This bit defines the memory aperture for Port D. Value Description 1 Advanced High-Performance Bus (AHB) 0 Advanced Peripheral Bus (APB). This bus is the legacy bus.
2	PORTC	R/W	0	Port C Advanced High-Performance Bus This bit defines the memory aperture for Port C. Value Description 1 Advanced High-Performance Bus (AHB) 0 Advanced Peripheral Bus (APB). This bus is the legacy bus.

Bit/Field	Name	Type	Reset	Description
1	PORTB	R/W	0	Port B Advanced High-Performance Bus This bit defines the memory aperture for Port B. Value Description 1 Advanced High-Performance Bus (AHB) 0 Advanced Peripheral Bus (APB). This bus is the legacy bus.
0	PORTA	R/W	0	Port A Advanced High-Performance Bus This bit defines the memory aperture for Port A. Value Description 1 Advanced High-Performance Bus (AHB) 0 Advanced Peripheral Bus (APB). This bus is the legacy bus.

Register 11: Run-Mode Clock Configuration 2 (RCC2), offset 0x070

This register overrides the **RCC** equivalent register fields, as shown in Table 5-7, when the USERCC2 bit is set, allowing the extended capabilities of the **RCC2** register to be used while also providing a means to be backward-compatible to previous parts. Each **RCC2** field that supersedes an **RCC** field is located at the same LSB bit position; however, some **RCC2** fields are larger than the corresponding **RCC** field.

Table 5-7. RCC2 Fields that Override RCC fields

RCC2 Field...	Overrides RCC Field
SYSDIV2, bits[28:23]	SYSDIV, bits[26:23]
PWRDN2, bit[13]	PWRDN, bit[13]
BYPASS2, bit[11]	BYPASS, bit[11]
OSCSRC2, bits[6:4]	OSCSRC, bits[5:4]

Run-Mode Clock Configuration 2 (RCC2)

Base 0x400F.E000
Offset 0x070
Type R/W, reset 0x0780.6810

	31	30	29	28	27	26	25	24	23	22	21	20	19	18	17	16
	USERCC2	reserved		SYSDIV2						reserved						
Type	R/W	RO	RO	R/W	R/W	R/W	R/W	R/W	R/W	RO	RO	RO	RO	RO	RO	RO
Reset	0	0	0	0	0	1	1	1	1	0	0	0	0	0	0	0

	15	14	13	12	11	10	9	8	7	6	5	4	3	2	1	0
	reserved	reserved	PWRDN2	reserved	BYPASS2	reserved				OSCSRC2			reserved			
Type	RO	RO	R/W	RO	R/W	RO	RO	RO	RO	R/W	R/W	R/W	RO	RO	RO	RO
Reset	0	1	1	0	1	0	0	0	0	0	0	1	0	0	0	0

Bit/Field	Name	Type	Reset	Description
31	USERCC2	R/W	0	Use RCC2 When set, overrides the **RCC** register fields.
30:29	reserved	RO	0x0	Software should not rely on the value of a reserved bit. To provide compatibility with future products, the value of a reserved bit should be preserved across a read-modify-write operation.
28:23	SYSDIV2	R/W	0x0F	System Clock Divisor Specifies which divisor is used to generate the system clock from either the PLL output or the oscillator source (depending on how the BYPASS2 bit is configured). SYSDIV2 is used for the divisor when both the USESYSDIV bit in the **RCC** register and the USERCC2 bit in this register are set. See Table 5-5 on page 175 for programming guidelines.
22:15	reserved	RO	0x0	Software should not rely on the value of a reserved bit. To provide compatibility with future products, the value of a reserved bit should be preserved across a read-modify-write operation.
14	reserved	RO	1	Software should not rely on the value of a reserved bit. To provide compatibility with future products, the value of a reserved bit should be preserved across a read-modify-write operation. Note that reset value is 1.

Bit/Field	Name	Type	Reset	Description
13	PWRDN2	R/W	1	Power-Down PLL When set, powers down the PLL.
12	reserved	RO	0	Software should not rely on the value of a reserved bit. To provide compatibility with future products, the value of a reserved bit should be preserved across a read-modify-write operation.
11	BYPASS2	R/W	1	Bypass PLL When set, bypasses the PLL for the clock source. See Table 5-5 on page 175 for programming guidelines.
10:7	reserved	RO	0x0	Software should not rely on the value of a reserved bit. To provide compatibility with future products, the value of a reserved bit should be preserved across a read-modify-write operation.
6:4	OSCSRC2	R/W	0x1	Oscillator Source Selects the input source for the OSC. The values are: Value Description 0x0 MOSC Main oscillator 0x1 IOSC Internal oscillator 0x2 IOSC/4 Internal oscillator / 4 0x3 30 kHz 30-kHz internal oscillator 0x4 Reserved 0x5 Reserved 0x6 Reserved 0x7 Reserved
3:0	reserved	RO	0	Software should not rely on the value of a reserved bit. To provide compatibility with future products, the value of a reserved bit should be preserved across a read-modify-write operation.

Register 12: Main Oscillator Control (MOSCCTL), offset 0x07C

This register provides control over the features of the main oscillator, including the ability to enable the MOSC clock validation circuit. When enabled, this circuit monitors the energy on the MOSC pins to provide a Clock Valid signal. If the clock goes invalid after being enabled, the part does a hardware reset and reboots to the NMI handler.

Main Oscillator Control (MOSCCTL)

Base 0x400F.E000
Offset 0x07C
Type R/W, reset 0x0000.0000

	31	30	29	28	27	26	25	24	23	22	21	20	19	18	17	16
	reserved															
Type	RO	RO	RO	RO	RO	RO	RO	RO	RO	RO	RO	RO	RO	RO	RO	RO
Reset	0	0	0	0	0	0	0	0	0	0	0	0	0	0	0	0

	15	14	13	12	11	10	9	8	7	6	5	4	3	2	1	0
	reserved															CVAL
Type	RO	RO	RO	RO	RO	RO	RO	RO	RO	RO	RO	RO	RO	RO	RO	R/W
Reset	0	0	0	0	0	0	0	0	0	0	0	0	0	0	0	0

Bit/Field	Name	Type	Reset	Description
31:1	reserved	RO	0x0	Software should not rely on the value of a reserved bit. To provide compatibility with future products, the value of a reserved bit should be preserved across a read-modify-write operation.
0	CVAL	R/W	0	Clock Validation for MOSC When set, the monitor circuit is enabled.

Register 13: Deep Sleep Clock Configuration (DSLPCLKCFG), offset 0x144

This register provides configuration information for the hardware control of Deep Sleep Mode.

Deep Sleep Clock Configuration (DSLPCLKCFG)

Base 0x400F.E000
Offset 0x144
Type R/W, reset 0x0780.0000

	31	30	29	28	27	26	25	24	23	22	21	20	19	18	17	16
	reserved			DSDIVORIDE						reserved						
Type	RO	RO	RO	R/W	R/W	R/W	R/W	R/W	R/W	RO	RO	RO	RO	RO	RO	RO
Reset	0	0	0	0	0	1	1	1	1	0	0	0	0	0	0	0

	15	14	13	12	11	10	9	8	7	6	5	4	3	2	1	0
	reserved									DSOSCSRC			reserved			
Type	RO	RO	RO	RO	RO	RO	RO	RO	RO	R/W	R/W	R/W	RO	RO	RO	RO
Reset	0	0	0	0	0	0	0	0	0	0	0	0	0	0	0	0

Bit/Field	Name	Type	Reset	Description
31:29	reserved	RO	0x0	Software should not rely on the value of a reserved bit. To provide compatibility with future products, the value of a reserved bit should be preserved across a read-modify-write operation.
28:23	DSDIVORIDE	R/W	0x0F	Divider Field Override 6-bit system divider field to override when Deep-Sleep occurs with PLL running.
22:7	reserved	RO	0x0	Software should not rely on the value of a reserved bit. To provide compatibility with future products, the value of a reserved bit should be preserved across a read-modify-write operation.
6:4	DSOSCSRC	R/W	0x0	Clock Source Specifies the clock source during Deep-Sleep mode. Value Description 0x0 MOSC Use main oscillator as source. 0x1 IOSC Use internal 12-MHz oscillator as source. 0x2 Reserved 0x3 30 kHz Use 30-kHz internal oscillator as source. 0x4 Reserved 0x5 Reserved 0x6 Reserved 0x7 Reserved
3:0	reserved	RO	0x0	Software should not rely on the value of a reserved bit. To provide compatibility with future products, the value of a reserved bit should be preserved across a read-modify-write operation.

Register 14: Device Identification 1 (DID1), offset 0x004

This register identifies the device family, part number, temperature range, pin count, and package type. Each microcontroller is uniquely identified by the combined values of the CLASS field in the **DID0** register and the PARTNO field in the **DID1** register.

Device Identification 1 (DID1)

Base 0x400F.E000
Offset 0x004
Type RO, reset -

	31	30	29	28	27	26	25	24	23	22	21	20	19	18	17	16
	VER				FAM				PARTNO							
Type	RO	RO	RO	RO	RO	RO	RO	RO	RO	RO	RO	RO	RO	RO	RO	RO
Reset	0	0	0	1	0	0	0	0	0	1	0	1	0	0	0	0

	15	14	13	12	11	10	9	8	7	6	5	4	3	2	1	0
	PINCOUNT			reserved					TEMP			PKG		ROHS	QUAL	
Type	RO	RO	RO	RO	RO	RO	RO	RO	RO	RO	RO	RO	RO	RO	RO	RO
Reset	0	1	1	0	0	0	0	0	-	-	-	-	-	1	-	-

Bit/Field	Name	Type	Reset	Description
31:28	VER	RO	0x1	DID1 Version This field defines the **DID1** register format version. The version number is numeric. The value of the VER field is encoded as follows (all other encodings are reserved): Value Description 0x1 Second version of the **DID1** register format.
27:24	FAM	RO	0x0	Family This field provides the family identification of the device within the Luminary Micro product portfolio. The value is encoded as follows (all other encodings are reserved): Value Description 0x0 Stellaris family of microcontollers, that is, all devices with external part numbers starting with LM3S.
23:16	PARTNO	RO	0x50	Part Number This field provides the part number of the device within the family. The value is encoded as follows (all other encodings are reserved): Value Description 0x50 LM3S2678
15:13	PINCOUNT	RO	0x3	Package Pin Count This field specifies the number of pins on the device package. The value is encoded as follows (all other encodings are reserved): Value Description 0x3 64-pin package

Bit/Field	Name	Type	Reset	Description
12:8	reserved	RO	0	Software should not rely on the value of a reserved bit. To provide compatibility with future products, the value of a reserved bit should be preserved across a read-modify-write operation.
7:5	TEMP	RO	-	Temperature Range This field specifies the temperature rating of the device. The value is encoded as follows (all other encodings are reserved): Value Description 0x0 Commercial temperature range (0°C to 70°C) 0x1 Industrial temperature range (-40°C to 85°C) 0x2 Extended temperature range (-40°C to 105°C)
4:3	PKG	RO	-	Package Type This field specifies the package type. The value is encoded as follows (all other encodings are reserved): Value Description 0x0 SOIC package 0x1 LQFP package 0x2 BGA package
2	ROHS	RO	1	RoHS-Compliance This bit specifies whether the device is RoHS-compliant. A 1 indicates the part is RoHS-compliant.
1:0	QUAL	RO	-	Qualification Status This field specifies the qualification status of the device. The value is encoded as follows (all other encodings are reserved): Value Description 0x0 Engineering Sample (unqualified) 0x1 Pilot Production (unqualified) 0x2 Fully Qualified

Register 15: Device Capabilities 0 (DC0), offset 0x008

This register is predefined by the part and can be used to verify features.

Device Capabilities 0 (DC0)

Base 0x400F.E000
Offset 0x008
Type RO, reset 0x007F.003F

	31	30	29	28	27	26	25	24	23	22	21	20	19	18	17	16
	SRAMSZ															
Type	RO	RO	RO	RO	RO	RO	RO	RO	RO	RO	RO	RO	RO	RO	RO	RO
Reset	0	0	0	0	0	0	0	0	0	1	1	1	1	1	1	1

	15	14	13	12	11	10	9	8	7	6	5	4	3	2	1	0
	FLASHSZ															
Type	RO	RO	RO	RO	RO	RO	RO	RO	RO	RO	RO	RO	RO	RO	RO	RO
Reset	0	0	0	0	0	0	0	0	0	0	1	1	1	1	1	1

Bit/Field	Name	Type	Reset	Description
31:16	SRAMSZ	RO	0x007F	SRAM Size Indicates the size of the on-chip SRAM memory. Value Description 0x007F 32 KB of SRAM
15:0	FLASHSZ	RO	0x003F	Flash Size Indicates the size of the on-chip flash memory. Value Description 0x003F 128 KB of Flash

Register 16: Device Capabilities 1 (DC1), offset 0x010

This register is predefined by the part and can be used to verify features. The `PWM`, `SARADC0`, `MAXADCSPD`, `WDT`, `SWO`, `SWD`, and `JTAG` bits mask the **RCGC0**, **SCGC0**, and **DCGC0** registers. Other bits are passed as 0. `MAXADCSPD` is clipped to the maximum value specified in **DC1**.

Device Capabilities 1 (DC1)

Base 0x400F.E000
Offset 0x010
Type RO, reset 0x0111.32BF

	31	30	29	28	27	26	25	24	23	22	21	20	19	18	17	16
	reserved							CAN0	reserved			PWM	reserved			ADC
Type	RO	RO	RO	RO	RO	RO	RO	RO	RO	RO	RO	RO	RO	RO	RO	RO
Reset	0	0	0	0	0	0	0	1	0	0	0	1	0	0	0	1

	15	14	13	12	11	10	9	8	7	6	5	4	3	2	1	0
	MINSYSDIV				reserved		MAXADCSPD		MPU	reserved	TEMPSNS	PLL	WDT	SWO	SWD	JTAG
Type	RO	RO	RO	RO	RO	RO	RO	RO	RO	RO	RO	RO	RO	RO	RO	RO
Reset	0	0	1	1	0	0	1	0	1	0	1	1	1	1	1	1

Bit/Field	Name	Type	Reset	Description
31:25	reserved	RO	0	Software should not rely on the value of a reserved bit. To provide compatibility with future products, the value of a reserved bit should be preserved across a read-modify-write operation.
24	CAN0	RO	1	CAN Module 0 Present When set, indicates that CAN unit 0 is present.
23:21	reserved	RO	0	Software should not rely on the value of a reserved bit. To provide compatibility with future products, the value of a reserved bit should be preserved across a read-modify-write operation.
20	PWM	RO	1	PWM Module Present When set, indicates that the PWM module is present.
19:17	reserved	RO	0	Software should not rely on the value of a reserved bit. To provide compatibility with future products, the value of a reserved bit should be preserved across a read-modify-write operation.
16	ADC	RO	1	ADC Module Present. When set, indicates that the ADC module is present.
15:12	MINSYSDIV	RO	0x3	System Clock Divider. Minimum 4-bit divider value for system clock. The reset value is hardware-dependent. See the **RCC** register for how to change the system clock divisor using the `SYSDIV` bit. Value Description 0x3 Specifies a 50-MHz CPU clock with a PLL divider of 4.
11:10	reserved	RO	0	Software should not rely on the value of a reserved bit. To provide compatibility with future products, the value of a reserved bit should be preserved across a read-modify-write operation.

Bit/Field	Name	Type	Reset	Description
9:8	MAXADCSPD	RO	0x2	Max ADC Speed. This field indicates the maximum rate at which the ADC samples data. Value Description 0x2 500K samples/second
7	MPU	RO	1	MPU Present. When set, indicates that the Cortex-M3 Memory Protection Unit (MPU) module is present. See the "Cortex-M3 Peripherals" chapter in the Stellaris Data Sheet for details on the MPU.
6	reserved	RO	0	Software should not rely on the value of a reserved bit. To provide compatibility with future products, the value of a reserved bit should be preserved across a read-modify-write operation.
5	TEMPSNS	RO	1	Temp Sensor Present. When set, indicates that the on-chip temperature sensor is present.
4	PLL	RO	1	PLL Present. When set, indicates that the on-chip Phase Locked Loop (PLL) is present.
3	WDT	RO	1	Watchdog Timer Present. When set, indicates that a watchdog timer is present.
2	SWO	RO	1	SWO Trace Port Present. When set, indicates that the Serial Wire Output (SWO) trace port is present.
1	SWD	RO	1	SWD Present. When set, indicates that the Serial Wire Debugger (SWD) is present.
0	JTAG	RO	1	JTAG Present. When set, indicates that the JTAG debugger interface is present.

Register 17: Device Capabilities 2 (DC2), offset 0x014

This register is predefined by the part and can be used to verify features.

Device Capabilities 2 (DC2)

Base 0x400F.E000
Offset 0x014
Type RO, reset 0x000F.0111

	31	30	29	28	27	26	25	24	23	22	21	20	19	18	17	16
	reserved												TIMER3	TIMER2	TIMER1	TIMER0
Type	RO	RO	RO	RO	RO	RO	RO	RO	RO	RO	RO	RO	RO	RO	RO	RO
Reset	0	0	0	0	0	0	0	0	0	0	0	0	1	1	1	1

	15	14	13	12	11	10	9	8	7	6	5	4	3	2	1	0
	reserved							QEI0	reserved			SSI0	reserved			UART0
Type	RO	RO	RO	RO	RO	RO	RO	RO	RO	RO	RO	RO	RO	RO	RO	RO
Reset	0	0	0	0	0	0	0	1	0	0	0	1	0	0	0	1

Bit/Field	Name	Type	Reset	Description
31:20	reserved	RO	0	Software should not rely on the value of a reserved bit. To provide compatibility with future products, the value of a reserved bit should be preserved across a read-modify-write operation.
19	TIMER3	RO	1	Timer 3 Present. When set, indicates that General-Purpose Timer module 3 is present.
18	TIMER2	RO	1	Timer 2 Present. When set, indicates that General-Purpose Timer module 2 is present.
17	TIMER1	RO	1	Timer 1 Present. When set, indicates that General-Purpose Timer module 1 is present.
16	TIMER0	RO	1	Timer 0 Present. When set, indicates that General-Purpose Timer module 0 is present.
15:9	reserved	RO	0	Software should not rely on the value of a reserved bit. To provide compatibility with future products, the value of a reserved bit should be preserved across a read-modify-write operation.
8	QEI0	RO	1	QEI0 Present. When set, indicates that QEI module 0 is present.
7:5	reserved	RO	0	Software should not rely on the value of a reserved bit. To provide compatibility with future products, the value of a reserved bit should be preserved across a read-modify-write operation.
4	SSI0	RO	1	SSI0 Present. When set, indicates that SSI module 0 is present.
3:1	reserved	RO	0	Software should not rely on the value of a reserved bit. To provide compatibility with future products, the value of a reserved bit should be preserved across a read-modify-write operation.
0	UART0	RO	1	UART0 Present. When set, indicates that UART module 0 is present.

Register 18: Device Capabilities 3 (DC3), offset 0x018

This register is predefined by the part and can be used to verify features.

Device Capabilities 3 (DC3)

Base 0x400F.E000
Offset 0x018
Type RO, reset 0x83FF.800F

	31	30	29	28	27	26	25	24	23	22	21	20	19	18	17	16
	32KHZ	reserved					CCP1	CCP0	ADC7	ADC6	ADC5	ADC4	ADC3	ADC2	ADC1	ADC0
Type	RO	RO	RO	RO	RO	RO	RO	RO	RO	RO	RO	RO	RO	RO	RO	RO
Reset	1	0	0	0	0	0	1	1	1	1	1	1	1	1	1	1

	15	14	13	12	11	10	9	8	7	6	5	4	3	2	1	0
	PWMFAULT	reserved											PWM3	PWM2	PWM1	PWM0
Type	RO	RO	RO	RO	RO	RO	RO	RO	RO	RO	RO	RO	RO	RO	RO	RO
Reset	1	0	0	0	0	0	0	0	0	0	0	0	1	1	1	1

Bit/Field	Name	Type	Reset	Description
31	32KHZ	RO	1	32KHz Input Clock Available. When set, indicates an even CCP pin is present and can be used as a 32-KHz input clock.
30:26	reserved	RO	0	Software should not rely on the value of a reserved bit. To provide compatibility with future products, the value of a reserved bit should be preserved across a read-modify-write operation.
25	CCP1	RO	1	CCP1 Pin Present. When set, indicates that Capture/Compare/PWM pin 1 is present.
24	CCP0	RO	1	CCP0 Pin Present. When set, indicates that Capture/Compare/PWM pin 0 is present.
23	ADC7	RO	1	ADC7 Pin Present. When set, indicates that ADC pin 7 is present.
22	ADC6	RO	1	ADC6 Pin Present. When set, indicates that ADC pin 6 is present.
21	ADC5	RO	1	ADC5 Pin Present. When set, indicates that ADC pin 5 is present.
20	ADC4	RO	1	ADC4 Pin Present. When set, indicates that ADC pin 4 is present.
19	ADC3	RO	1	ADC3 Pin Present. When set, indicates that ADC pin 3 is present.
18	ADC2	RO	1	ADC2 Pin Present. When set, indicates that ADC pin 2 is present.
17	ADC1	RO	1	ADC1 Pin Present. When set, indicates that ADC pin 1 is present.
16	ADC0	RO	1	ADC0 Pin Present. When set, indicates that ADC pin 0 is present.
15	PWMFAULT	RO	1	PWM Fault Pin Present. When set, indicates that a PWM Fault pin is present. See **DC5** for specific Fault pins on this device.
14:4	reserved	RO	0	Software should not rely on the value of a reserved bit. To provide compatibility with future products, the value of a reserved bit should be preserved across a read-modify-write operation.
3	PWM3	RO	1	PWM3 Pin Present. When set, indicates that the PWM pin 3 is present.
2	PWM2	RO	1	PWM2 Pin Present. When set, indicates that the PWM pin 2 is present.
1	PWM1	RO	1	PWM1 Pin Present. When set, indicates that the PWM pin 1 is present.

Bit/Field	Name	Type	Reset	Description
0	PWM0	RO	1	PWM0 Pin Present. When set, indicates that the PWM pin 0 is present.

Register 19: Device Capabilities 4 (DC4), offset 0x01C

This register is predefined by the part and can be used to verify features.

Device Capabilities 4 (DC4)

Base 0x400F.E000
Offset 0x01C
Type RO, reset 0x0000.301F

	31	30	29	28	27	26	25	24	23	22	21	20	19	18	17	16
	reserved															
Type	RO	RO	RO	RO	RO	RO	RO	RO	RO	RO	RO	RO	RO	RO	RO	RO
Reset	0	0	0	0	0	0	0	0	0	0	0	0	0	0	0	0

	15	14	13	12	11	10	9	8	7	6	5	4	3	2	1	0
	reserved		UDMA	ROM	reserved							GPIOE	GPIOD	GPIOC	GPIOB	GPIOA
Type	RO	RO	RO	RO	RO	RO	RO	RO	RO	RO	RO	RO	RO	RO	RO	RO
Reset	0	0	1	1	0	0	0	0	0	0	0	1	1	1	1	1

Bit/Field	Name	Type	Reset	Description
31:14	reserved	RO	0	Software should not rely on the value of a reserved bit. To provide compatibility with future products, the value of a reserved bit should be preserved across a read-modify-write operation.
13	UDMA	RO	1	Micro-DMA is present
12	ROM	RO	1	Internal Code ROM is present
11:5	reserved	RO	0	Software should not rely on the value of a reserved bit. To provide compatibility with future products, the value of a reserved bit should be preserved across a read-modify-write operation.
4	GPIOE	RO	1	GPIO Port E Present. When set, indicates that GPIO Port E is present.
3	GPIOD	RO	1	GPIO Port D Present. When set, indicates that GPIO Port D is present.
2	GPIOC	RO	1	GPIO Port C Present. When set, indicates that GPIO Port C is present.
1	GPIOB	RO	1	GPIO Port B Present. When set, indicates that GPIO Port B is present.
0	GPIOA	RO	1	GPIO Port A Present. When set, indicates that GPIO Port A is present.

Register 20: Device Capabilities 5 (DC5), offset 0x020

This register is predefined by the part and can be used to verify features.

Device Capabilities 5 (DC5)

Base 0x400F.E000
Offset 0x020
Type RO, reset 0x0330.000F

	31	30	29	28	27	26	25	24	23	22	21	20	19	18	17	16
	reserved						PWMFAULT1	PWMFAULT0	reserved		PWMEFLT	PWMESYNC	reserved			
Type	RO	RO	RO	RO	RO	RO	RO	RO	RO	RO	RO	RO	RO	RO	RO	RO
Reset	0	0	0	0	0	0	1	1	0	0	1	1	0	0	0	0

	15	14	13	12	11	10	9	8	7	6	5	4	3	2	1	0
	reserved												PWM3	PWM2	PWM1	PWM0
Type	RO	RO	RO	RO	RO	RO	RO	RO	RO	RO	RO	RO	RO	RO	RO	RO
Reset	0	0	0	0	0	0	0	0	0	0	0	0	1	1	1	1

Bit/Field	Name	Type	Reset	Description
31:26	reserved	RO	0	Software should not rely on the value of a reserved bit. To provide compatibility with future products, the value of a reserved bit should be preserved across a read-modify-write operation.
25	PWMFAULT1	RO	1	PWM Fault 1 Pin Present. When set, indicates that the PWM Fault 1 pin is present.
24	PWMFAULT0	RO	1	PWM Fault 0 Pin Present. When set, indicates that the PWM Fault 0 pin is present.
23:22	reserved	RO	0	Software should not rely on the value of a reserved bit. To provide compatibility with future products, the value of a reserved bit should be preserved across a read-modify-write operation.
21	PWMEFLT	RO	1	PWM Extended Fault feature is active
20	PWMESYNC	RO	1	PWM Extended SYNC feature is active
19:4	reserved	RO	0	Software should not rely on the value of a reserved bit. To provide compatibility with future products, the value of a reserved bit should be preserved across a read-modify-write operation.
3	PWM3	RO	1	PWM3 Pin Present. When set, indicates that the PWM pin 3 is present.
2	PWM2	RO	1	PWM2 Pin Present. When set, indicates that the PWM pin 2 is present.
1	PWM1	RO	1	PWM1 Pin Present. When set, indicates that the PWM pin 1 is present.
0	PWM0	RO	1	PWM0 Pin Present. When set, indicates that the PWM pin 0 is present.

Register 21: Device Capabilities 6 (DC6), offset 0x024

This register is predefined by the part and can be used to verify features.

Device Capabilities 6 (DC6)

Base 0x400F.E000
Offset 0x024
Type RO, reset 0x0000.0000

	31	30	29	28	27	26	25	24	23	22	21	20	19	18	17	16
	reserved															
Type	RO	RO	RO	RO	RO	RO	RO	RO	RO	RO	RO	RO	RO	RO	RO	RO
Reset	0	0	0	0	0	0	0	0	0	0	0	0	0	0	0	0

	15	14	13	12	11	10	9	8	7	6	5	4	3	2	1	0
	reserved															
Type	RO	RO	RO	RO	RO	RO	RO	RO	RO	RO	RO	RO	RO	RO	RO	RO
Reset	0	0	0	0	0	0	0	0	0	0	0	0	0	0	0	0

Bit/Field	Name	Type	Reset	Description
31:0	reserved	RO	0	Software should not rely on the value of a reserved bit. To provide compatibility with future products, the value of a reserved bit should be preserved across a read-modify-write operation.

Register 22: Device Capabilities 7 (DC7), offset 0x028

This register is predefined by the part and can be used to verify uDMA channel features.

Device Capabilities 7 (DC7)

Base 0x400F.E000
Offset 0x028
Type RO, reset 0x4000.0F00

	31	30	29	28	27	26	25	24	23	22	21	20	19	18	17	16
	reserved	SW	reserved													
Type	RO	RO	RO	RO	RO	RO	RO	RO	RO	RO	RO	RO	RO	RO	RO	RO
Reset	0	1	0	0	0	0	0	0	0	0	0	0	0	0	0	0

	15	14	13	12	11	10	9	8	7	6	5	4	3	2	1	0
	reserved				SSI0_TX	SSI0_RX	UART0_TX	UART0_RX	reserved							
Type	RO	RO	RO	RO	RO	RO	RO	RO	RO	RO	RO	RO	RO	RO	RO	RO
Reset	0	0	0	0	1	1	1	1	0	0	0	0	0	0	0	0

Bit/Field	Name	Type	Reset	Description
31	reserved	RO	0	Software should not rely on the value of a reserved bit. To provide compatibility with future products, the value of a reserved bit should be preserved across a read-modify-write operation.
30	SW	RO	1	Software transfer on uDMA Ch30. When set, indicates uDMA channel 30 is available for software.
29:12	reserved	RO	0	Software should not rely on the value of a reserved bit. To provide compatibility with future products, the value of a reserved bit should be preserved across a read-modify-write operation.
11	SSI0_TX	RO	1	SSI0 TX on uDMA Ch11. When set, indicates uDMA channel 11 is available and connected to the transmit path of SSI module 0.
10	SSI0_RX	RO	1	SSI0 RX on uDMA Ch10. When set, indicates uDMA channel 10 is available and connected to the receive path of SSI module 0.
9	UART0_TX	RO	1	UART0 TX on uDMA Ch9. When set, indicates uDMA channel 9 is available and connected to the transmit path of UART module 0.
8	UART0_RX	RO	1	UART0 RX on uDMA Ch8. When set, indicates uDMA channel 8 is available and connected to the receive path of UART module 0.
7:0	reserved	RO	0	Software should not rely on the value of a reserved bit. To provide compatibility with future products, the value of a reserved bit should be preserved across a read-modify-write operation.

Register 23: Run Mode Clock Gating Control Register 0 (RCGC0), offset 0x100

This register controls the clock gating logic. Each bit controls a clock enable for a given interface, function, or unit. If set, the unit receives a clock and functions. Otherwise, the unit is unclocked and disabled (saving power). If the unit is unclocked, reads or writes to the unit will generate a bus fault. The reset state of these bits is 0 (unclocked) unless otherwise noted, so that all functional units are disabled. It is the responsibility of software to enable the ports necessary for the application. Note that these registers may contain more bits than there are interfaces, functions, or units to control. This is to assure reasonable code compatibility with other family and future parts. **RCGC0** is the clock configuration register for running operation, **SCGC0** for Sleep operation, and **DCGC0** for Deep-Sleep operation. Setting the ACG bit in the **Run-Mode Clock Configuration (RCC)** register specifies that the system uses sleep modes.

Run Mode Clock Gating Control Register 0 (RCGC0)

Base 0x400F.E000
Offset 0x100
Type R/W, reset 0x00000040

	31	30	29	28	27	26	25	24	23	22	21	20	19	18	17	16
	reserved							CAN0	reserved			PWM	reserved			ADC
Type	RO	RO	RO	RO	RO	RO	RO	R/W	RO	RO	RO	R/W	RO	RO	RO	R/W
Reset	0	0	0	0	0	0	0	0	0	0	0	0	0	0	0	0

	15	14	13	12	11	10	9	8	7	6	5	4	3	2	1	0
	reserved						MAXADCSPD		reserved	reserved	reserved		WDT	reserved		
Type	RO	RO	RO	RO	RO	RO	R/W	R/W	RO	RO	RO	RO	R/W	RO	RO	RO
Reset	0	0	0	0	0	0	0	0	0	1	0	0	0	0	0	0

Bit/Field	Name	Type	Reset	Description
31:25	reserved	RO	0	Software should not rely on the value of a reserved bit. To provide compatibility with future products, the value of a reserved bit should be preserved across a read-modify-write operation.
24	CAN0	R/W	0	CAN0 Clock Gating Control. This bit controls the clock gating for CAN unit 0. If set, the unit receives a clock and functions. Otherwise, the unit is unclocked and disabled.
23:21	reserved	RO	0	Software should not rely on the value of a reserved bit. To provide compatibility with future products, the value of a reserved bit should be preserved across a read-modify-write operation.
20	PWM	R/W	0	PWM Clock Gating Control. This bit controls the clock gating for the PWM module. If set, the unit receives a clock and functions. Otherwise, the unit is unclocked and disabled. If the unit is unclocked, a read or write to the unit generates a bus fault.
19:17	reserved	RO	0	Software should not rely on the value of a reserved bit. To provide compatibility with future products, the value of a reserved bit should be preserved across a read-modify-write operation.
16	ADC	R/W	0	ADC0 Clock Gating Control. This bit controls the clock gating for SAR ADC module 0. If set, the unit receives a clock and functions. Otherwise, the unit is unclocked and disabled. If the unit is unclocked, a read or write to the unit generates a bus fault.
15:10	reserved	RO	0	Software should not rely on the value of a reserved bit. To provide compatibility with future products, the value of a reserved bit should be preserved across a read-modify-write operation.

Bit/Field	Name	Type	Reset	Description
9:8	MAXADCSPD	R/W	0	ADC Sample Speed. This field sets the rate at which the ADC samples data. You cannot set the rate higher than the maximum rate. You can set the sample rate by setting the `MAXADCSPD` bit as follows: Value Description 0x2 500K samples/second 0x1 250K samples/second 0x0 125K samples/second
7	reserved	RO	0	Software should not rely on the value of a reserved bit. To provide compatibility with future products, the value of a reserved bit should be preserved across a read-modify-write operation.
6	reserved	RO	1	Software should not rely on the value of a reserved bit. To provide compatibility with future products, the value of a reserved bit should be preserved across a read-modify-write operation.
5:4	reserved	RO	0	Software should not rely on the value of a reserved bit. To provide compatibility with future products, the value of a reserved bit should be preserved across a read-modify-write operation.
3	WDT	R/W	0	WDT Clock Gating Control. This bit controls the clock gating for the WDT module. If set, the unit receives a clock and functions. Otherwise, the unit is unclocked and disabled. If the unit is unclocked, a read or write to the unit generates a bus fault.
2:0	reserved	RO	0	Software should not rely on the value of a reserved bit. To provide compatibility with future products, the value of a reserved bit should be preserved across a read-modify-write operation.

Register 24: Sleep Mode Clock Gating Control Register 0 (SCGC0), offset 0x110

This register controls the clock gating logic. Each bit controls a clock enable for a given interface, function, or unit. If set, the unit receives a clock and functions. Otherwise, the unit is unclocked and disabled (saving power). If the unit is unclocked, reads or writes to the unit will generate a bus fault. The reset state of these bits is 0 (unclocked) unless otherwise noted, so that all functional units are disabled. It is the responsibility of software to enable the ports necessary for the application. Note that these registers may contain more bits than there are interfaces, functions, or units to control. This is to assure reasonable code compatibility with other family and future parts. **RCGC0** is the clock configuration register for running operation, **SCGC0** for Sleep operation, and **DCGC0** for Deep-Sleep operation. Setting the ACG bit in the **Run-Mode Clock Configuration (RCC)** register specifies that the system uses sleep modes.

Sleep Mode Clock Gating Control Register 0 (SCGC0)

Base 0x400F.E000
Offset 0x110
Type R/W, reset 0x00000040

	31	30	29	28	27	26	25	24	23	22	21	20	19	18	17	16
	reserved							CAN0	reserved			PWM	reserved			ADC
Type	RO	RO	RO	RO	RO	RO	RO	R/W	RO	RO	RO	R/W	RO	RO	RO	R/W
Reset	0	0	0	0	0	0	0	0	0	0	0	0	0	0	0	0

	15	14	13	12	11	10	9	8	7	6	5	4	3	2	1	0
	reserved						MAXADCSPD		reserved	reserved	reserved		WDT	reserved		
Type	RO	RO	RO	RO	RO	RO	R/W	R/W	RO	RO	RO	RO	R/W	RO	RO	RO
Reset	0	0	0	0	0	0	0	0	0	1	0	0	0	0	0	0

Bit/Field	Name	Type	Reset	Description
31:25	reserved	RO	0	Software should not rely on the value of a reserved bit. To provide compatibility with future products, the value of a reserved bit should be preserved across a read-modify-write operation.
24	CAN0	R/W	0	CAN0 Clock Gating Control. This bit controls the clock gating for CAN unit 0. If set, the unit receives a clock and functions. Otherwise, the unit is unclocked and disabled.
23:21	reserved	RO	0	Software should not rely on the value of a reserved bit. To provide compatibility with future products, the value of a reserved bit should be preserved across a read-modify-write operation.
20	PWM	R/W	0	PWM Clock Gating Control. This bit controls the clock gating for the PWM module. If set, the unit receives a clock and functions. Otherwise, the unit is unclocked and disabled. If the unit is unclocked, a read or write to the unit generates a bus fault.
19:17	reserved	RO	0	Software should not rely on the value of a reserved bit. To provide compatibility with future products, the value of a reserved bit should be preserved across a read-modify-write operation.
16	ADC	R/W	0	ADC0 Clock Gating Control. This bit controls the clock gating for general SAR ADC module 0. If set, the unit receives a clock and functions. Otherwise, the unit is unclocked and disabled. If the unit is unclocked, a read or write to the unit generates a bus fault.

Bit/Field	Name	Type	Reset	Description
15:10	reserved	RO	0	Software should not rely on the value of a reserved bit. To provide compatibility with future products, the value of a reserved bit should be preserved across a read-modify-write operation.
9:8	MAXADCSPD	R/W	0	ADC Sample Speed. This field sets the rate at which the ADC samples data. You cannot set the rate higher than the maximum rate.You can set the sample rate by setting the `MAXADCSPD` bit as follows: Value Description 0x2 500K samples/second 0x1 250K samples/second 0x0 125K samples/second
7	reserved	RO	0	Software should not rely on the value of a reserved bit. To provide compatibility with future products, the value of a reserved bit should be preserved across a read-modify-write operation.
6	reserved	RO	1	Software should not rely on the value of a reserved bit. To provide compatibility with future products, the value of a reserved bit should be preserved across a read-modify-write operation.
5:4	reserved	RO	0	Software should not rely on the value of a reserved bit. To provide compatibility with future products, the value of a reserved bit should be preserved across a read-modify-write operation.
3	WDT	R/W	0	WDT Clock Gating Control. This bit controls the clock gating for the WDT module. If set, the unit receives a clock and functions. Otherwise, the unit is unclocked and disabled. If the unit is unclocked, a read or write to the unit generates a bus fault.
2:0	reserved	RO	0	Software should not rely on the value of a reserved bit. To provide compatibility with future products, the value of a reserved bit should be preserved across a read-modify-write operation.

Register 25: Deep Sleep Mode Clock Gating Control Register 0 (DCGC0), offset 0x120

This register controls the clock gating logic. Each bit controls a clock enable for a given interface, function, or unit. If set, the unit receives a clock and functions. Otherwise, the unit is unclocked and disabled (saving power). If the unit is unclocked, reads or writes to the unit will generate a bus fault. The reset state of these bits is 0 (unclocked) unless otherwise noted, so that all functional units are disabled. It is the responsibility of software to enable the ports necessary for the application. Note that these registers may contain more bits than there are interfaces, functions, or units to control. This is to assure reasonable code compatibility with other family and future parts. **RCGC0** is the clock configuration register for running operation, **SCGC0** for Sleep operation, and **DCGC0** for Deep-Sleep operation. Setting the ACG bit in the **Run-Mode Clock Configuration (RCC)** register specifies that the system uses sleep modes.

Deep Sleep Mode Clock Gating Control Register 0 (DCGC0)

Base 0x400F.E000
Offset 0x120
Type R/W, reset 0x00000040

	31	30	29	28	27	26	25	24	23	22	21	20	19	18	17	16
	reserved							CAN0	reserved			PWM	reserved			ADC
Type	RO	RO	RO	RO	RO	RO	RO	R/W	RO	RO	RO	R/W	RO	RO	RO	R/W
Reset	0	0	0	0	0	0	0	0	0	0	0	0	0	0	0	0

	15	14	13	12	11	10	9	8	7	6	5	4	3	2	1	0
	reserved									reserved	reserved		WDT	reserved		
Type	RO	RO	RO	RO	RO	RO	RO	RO	RO	RO	RO	RO	R/W	RO	RO	RO
Reset	0	0	0	0	0	0	0	0	0	1	0	0	0	0	0	0

Bit/Field	Name	Type	Reset	Description
31:25	reserved	RO	0	Software should not rely on the value of a reserved bit. To provide compatibility with future products, the value of a reserved bit should be preserved across a read-modify-write operation.
24	CAN0	R/W	0	CAN0 Clock Gating Control. This bit controls the clock gating for CAN unit 0. If set, the unit receives a clock and functions. Otherwise, the unit is unclocked and disabled.
23:21	reserved	RO	0	Software should not rely on the value of a reserved bit. To provide compatibility with future products, the value of a reserved bit should be preserved across a read-modify-write operation.
20	PWM	R/W	0	PWM Clock Gating Control. This bit controls the clock gating for the PWM module. If set, the unit receives a clock and functions. Otherwise, the unit is unclocked and disabled. If the unit is unclocked, a read or write to the unit generates a bus fault.
19:17	reserved	RO	0	Software should not rely on the value of a reserved bit. To provide compatibility with future products, the value of a reserved bit should be preserved across a read-modify-write operation.
16	ADC	R/W	0	ADC0 Clock Gating Control. This bit controls the clock gating for general SAR ADC module 0. If set, the unit receives a clock and functions. Otherwise, the unit is unclocked and disabled. If the unit is unclocked, a read or write to the unit generates a bus fault.

Bit/Field	Name	Type	Reset	Description
15:7	reserved	RO	0	Software should not rely on the value of a reserved bit. To provide compatibility with future products, the value of a reserved bit should be preserved across a read-modify-write operation.
6	reserved	RO	1	Software should not rely on the value of a reserved bit. To provide compatibility with future products, the value of a reserved bit should be preserved across a read-modify-write operation.
5:4	reserved	RO	0	Software should not rely on the value of a reserved bit. To provide compatibility with future products, the value of a reserved bit should be preserved across a read-modify-write operation.
3	WDT	R/W	0	WDT Clock Gating Control. This bit controls the clock gating for the WDT module. If set, the unit receives a clock and functions. Otherwise, the unit is unclocked and disabled. If the unit is unclocked, a read or write to the unit generates a bus fault.
2:0	reserved	RO	0	Software should not rely on the value of a reserved bit. To provide compatibility with future products, the value of a reserved bit should be preserved across a read-modify-write operation.

Register 26: Run Mode Clock Gating Control Register 1 (RCGC1), offset 0x104

This register controls the clock gating logic. Each bit controls a clock enable for a given interface, function, or unit. If set, the unit receives a clock and functions. Otherwise, the unit is unclocked and disabled (saving power). If the unit is unclocked, reads or writes to the unit will generate a bus fault. The reset state of these bits is 0 (unclocked) unless otherwise noted, so that all functional units are disabled. It is the responsibility of software to enable the ports necessary for the application. Note that these registers may contain more bits than there are interfaces, functions, or units to control. This is to assure reasonable code compatibility with other family and future parts. **RCGC1** is the clock configuration register for running operation, **SCGC1** for Sleep operation, and **DCGC1** for Deep-Sleep operation. Setting the ACG bit in the **Run-Mode Clock Configuration (RCC)** register specifies that the system uses sleep modes.

Run Mode Clock Gating Control Register 1 (RCGC1)

Base 0x400F.E000
Offset 0x104
Type R/W, reset 0x00000000

	31	30	29	28	27	26	25	24	23	22	21	20	19	18	17	16
	reserved												TIMER3	TIMER2	TIMER1	TIMER0
Type	RO	RO	RO	RO	RO	RO	RO	RO	RO	RO	RO	RO	R/W	R/W	R/W	R/W
Reset	0	0	0	0	0	0	0	0	0	0	0	0	0	0	0	0

	15	14	13	12	11	10	9	8	7	6	5	4	3	2	1	0
	reserved							QEI0	reserved			SSI0	reserved			UART0
Type	RO	RO	RO	RO	RO	RO	RO	R/W	RO	RO	RO	R/W	RO	RO	RO	R/W
Reset	0	0	0	0	0	0	0	0	0	0	0	0	0	0	0	0

Bit/Field	Name	Type	Reset	Description
31:20	reserved	RO	0	Software should not rely on the value of a reserved bit. To provide compatibility with future products, the value of a reserved bit should be preserved across a read-modify-write operation.
19	TIMER3	R/W	0	Timer 3 Clock Gating Control. This bit controls the clock gating for General-Purpose Timer module 3. If set, the unit receives a clock and functions. Otherwise, the unit is unclocked and disabled. If the unit is unclocked, reads or writes to the unit will generate a bus fault.
18	TIMER2	R/W	0	Timer 2 Clock Gating Control. This bit controls the clock gating for General-Purpose Timer module 2. If set, the unit receives a clock and functions. Otherwise, the unit is unclocked and disabled. If the unit is unclocked, reads or writes to the unit will generate a bus fault.
17	TIMER1	R/W	0	Timer 1 Clock Gating Control. This bit controls the clock gating for General-Purpose Timer module 1. If set, the unit receives a clock and functions. Otherwise, the unit is unclocked and disabled. If the unit is unclocked, reads or writes to the unit will generate a bus fault.
16	TIMER0	R/W	0	Timer 0 Clock Gating Control. This bit controls the clock gating for General-Purpose Timer module 0. If set, the unit receives a clock and functions. Otherwise, the unit is unclocked and disabled. If the unit is unclocked, reads or writes to the unit will generate a bus fault.
15:9	reserved	RO	0	Software should not rely on the value of a reserved bit. To provide compatibility with future products, the value of a reserved bit should be preserved across a read-modify-write operation.

Bit/Field	Name	Type	Reset	Description
8	QEI0	R/W	0	QEI0 Clock Gating Control. This bit controls the clock gating for QEI module 0. If set, the unit receives a clock and functions. Otherwise, the unit is unclocked and disabled. If the unit is unclocked, reads or writes to the unit will generate a bus fault.
7:5	reserved	RO	0	Software should not rely on the value of a reserved bit. To provide compatibility with future products, the value of a reserved bit should be preserved across a read-modify-write operation.
4	SSI0	R/W	0	SSI0 Clock Gating Control. This bit controls the clock gating for SSI module 0. If set, the unit receives a clock and functions. Otherwise, the unit is unclocked and disabled. If the unit is unclocked, reads or writes to the unit will generate a bus fault.
3:1	reserved	RO	0	Software should not rely on the value of a reserved bit. To provide compatibility with future products, the value of a reserved bit should be preserved across a read-modify-write operation.
0	UART0	R/W	0	UART0 Clock Gating Control. This bit controls the clock gating for UART module 0. If set, the unit receives a clock and functions. Otherwise, the unit is unclocked and disabled. If the unit is unclocked, reads or writes to the unit will generate a bus fault.

Register 27: Sleep Mode Clock Gating Control Register 1 (SCGC1), offset 0x114

This register controls the clock gating logic. Each bit controls a clock enable for a given interface, function, or unit. If set, the unit receives a clock and functions. Otherwise, the unit is unclocked and disabled (saving power). If the unit is unclocked, reads or writes to the unit will generate a bus fault. The reset state of these bits is 0 (unclocked) unless otherwise noted, so that all functional units are disabled. It is the responsibility of software to enable the ports necessary for the application. Note that these registers may contain more bits than there are interfaces, functions, or units to control. This is to assure reasonable code compatibility with other family and future parts. **RCGC1** is the clock configuration register for running operation, **SCGC1** for Sleep operation, and **DCGC1** for Deep-Sleep operation. Setting the ACG bit in the **Run-Mode Clock Configuration (RCC)** register specifies that the system uses sleep modes.

Sleep Mode Clock Gating Control Register 1 (SCGC1)

Base 0x400F.E000
Offset 0x114
Type R/W, reset 0x00000000

	31	30	29	28	27	26	25	24	23	22	21	20	19	18	17	16
	reserved												TIMER3	TIMER2	TIMER1	TIMER0
Type	RO	RO	RO	RO	RO	RO	RO	RO	RO	RO	RO	RO	R/W	R/W	R/W	R/W
Reset	0	0	0	0	0	0	0	0	0	0	0	0	0	0	0	0

	15	14	13	12	11	10	9	8	7	6	5	4	3	2	1	0
	reserved							QEI0	reserved			SSI0	reserved			UART0
Type	RO	RO	RO	RO	RO	RO	RO	R/W	RO	RO	RO	R/W	RO	RO	RO	R/W
Reset	0	0	0	0	0	0	0	0	0	0	0	0	0	0	0	0

Bit/Field	Name	Type	Reset	Description
31:20	reserved	RO	0	Software should not rely on the value of a reserved bit. To provide compatibility with future products, the value of a reserved bit should be preserved across a read-modify-write operation.
19	TIMER3	R/W	0	Timer 3 Clock Gating Control. This bit controls the clock gating for General-Purpose Timer module 3. If set, the unit receives a clock and functions. Otherwise, the unit is unclocked and disabled. If the unit is unclocked, reads or writes to the unit will generate a bus fault.
18	TIMER2	R/W	0	Timer 2 Clock Gating Control. This bit controls the clock gating for General-Purpose Timer module 2. If set, the unit receives a clock and functions. Otherwise, the unit is unclocked and disabled. If the unit is unclocked, reads or writes to the unit will generate a bus fault.
17	TIMER1	R/W	0	Timer 1 Clock Gating Control. This bit controls the clock gating for General-Purpose Timer module 1. If set, the unit receives a clock and functions. Otherwise, the unit is unclocked and disabled. If the unit is unclocked, reads or writes to the unit will generate a bus fault.
16	TIMER0	R/W	0	Timer 0 Clock Gating Control. This bit controls the clock gating for General-Purpose Timer module 0. If set, the unit receives a clock and functions. Otherwise, the unit is unclocked and disabled. If the unit is unclocked, reads or writes to the unit will generate a bus fault.
15:9	reserved	RO	0	Software should not rely on the value of a reserved bit. To provide compatibility with future products, the value of a reserved bit should be preserved across a read-modify-write operation.

Bit/Field	Name	Type	Reset	Description
8	QEI0	R/W	0	QEI0 Clock Gating Control. This bit controls the clock gating for QEI module 0. If set, the unit receives a clock and functions. Otherwise, the unit is unclocked and disabled. If the unit is unclocked, reads or writes to the unit will generate a bus fault.
7:5	reserved	RO	0	Software should not rely on the value of a reserved bit. To provide compatibility with future products, the value of a reserved bit should be preserved across a read-modify-write operation.
4	SSI0	R/W	0	SSI0 Clock Gating Control. This bit controls the clock gating for SSI module 0. If set, the unit receives a clock and functions. Otherwise, the unit is unclocked and disabled. If the unit is unclocked, reads or writes to the unit will generate a bus fault.
3:1	reserved	RO	0	Software should not rely on the value of a reserved bit. To provide compatibility with future products, the value of a reserved bit should be preserved across a read-modify-write operation.
0	UART0	R/W	0	UART0 Clock Gating Control. This bit controls the clock gating for UART module 0. If set, the unit receives a clock and functions. Otherwise, the unit is unclocked and disabled. If the unit is unclocked, reads or writes to the unit will generate a bus fault.

Register 28: Deep Sleep Mode Clock Gating Control Register 1 (DCGC1), offset 0x124

This register controls the clock gating logic. Each bit controls a clock enable for a given interface, function, or unit. If set, the unit receives a clock and functions. Otherwise, the unit is unclocked and disabled (saving power). If the unit is unclocked, reads or writes to the unit will generate a bus fault. The reset state of these bits is 0 (unclocked) unless otherwise noted, so that all functional units are disabled. It is the responsibility of software to enable the ports necessary for the application. Note that these registers may contain more bits than there are interfaces, functions, or units to control. This is to assure reasonable code compatibility with other family and future parts. **RCGC1** is the clock configuration register for running operation, **SCGC1** for Sleep operation, and **DCGC1** for Deep-Sleep operation. Setting the ACG bit in the **Run-Mode Clock Configuration (RCC)** register specifies that the system uses sleep modes.

Deep Sleep Mode Clock Gating Control Register 1 (DCGC1)

Base 0x400F.E000
Offset 0x124
Type R/W, reset 0x00000000

	31	30	29	28	27	26	25	24	23	22	21	20	19	18	17	16
	reserved												TIMER3	TIMER2	TIMER1	TIMER0
Type	RO	RO	RO	RO	RO	RO	RO	RO	RO	RO	RO	RO	R/W	R/W	R/W	R/W
Reset	0	0	0	0	0	0	0	0	0	0	0	0	0	0	0	0

	15	14	13	12	11	10	9	8	7	6	5	4	3	2	1	0
	reserved							QEI0	reserved			SSI0	reserved			UART0
Type	RO	RO	RO	RO	RO	RO	RO	R/W	RO	RO	RO	R/W	RO	RO	RO	R/W
Reset	0	0	0	0	0	0	0	0	0	0	0	0	0	0	0	0

Bit/Field	Name	Type	Reset	Description
31:20	reserved	RO	0	Software should not rely on the value of a reserved bit. To provide compatibility with future products, the value of a reserved bit should be preserved across a read-modify-write operation.
19	TIMER3	R/W	0	Timer 3 Clock Gating Control. This bit controls the clock gating for General-Purpose Timer module 3. If set, the unit receives a clock and functions. Otherwise, the unit is unclocked and disabled. If the unit is unclocked, reads or writes to the unit will generate a bus fault.
18	TIMER2	R/W	0	Timer 2 Clock Gating Control. This bit controls the clock gating for General-Purpose Timer module 2. If set, the unit receives a clock and functions. Otherwise, the unit is unclocked and disabled. If the unit is unclocked, reads or writes to the unit will generate a bus fault.
17	TIMER1	R/W	0	Timer 1 Clock Gating Control. This bit controls the clock gating for General-Purpose Timer module 1. If set, the unit receives a clock and functions. Otherwise, the unit is unclocked and disabled. If the unit is unclocked, reads or writes to the unit will generate a bus fault.
16	TIMER0	R/W	0	Timer 0 Clock Gating Control. This bit controls the clock gating for General-Purpose Timer module 0. If set, the unit receives a clock and functions. Otherwise, the unit is unclocked and disabled. If the unit is unclocked, reads or writes to the unit will generate a bus fault.
15:9	reserved	RO	0	Software should not rely on the value of a reserved bit. To provide compatibility with future products, the value of a reserved bit should be preserved across a read-modify-write operation.

Bit/Field	Name	Type	Reset	Description
8	QEI0	R/W	0	QEI0 Clock Gating Control. This bit controls the clock gating for QEI module 0. If set, the unit receives a clock and functions. Otherwise, the unit is unclocked and disabled. If the unit is unclocked, reads or writes to the unit will generate a bus fault.
7:5	reserved	RO	0	Software should not rely on the value of a reserved bit. To provide compatibility with future products, the value of a reserved bit should be preserved across a read-modify-write operation.
4	SSI0	R/W	0	SSI0 Clock Gating Control. This bit controls the clock gating for SSI module 0. If set, the unit receives a clock and functions. Otherwise, the unit is unclocked and disabled. If the unit is unclocked, reads or writes to the unit will generate a bus fault.
3:1	reserved	RO	0	Software should not rely on the value of a reserved bit. To provide compatibility with future products, the value of a reserved bit should be preserved across a read-modify-write operation.
0	UART0	R/W	0	UART0 Clock Gating Control. This bit controls the clock gating for UART module 0. If set, the unit receives a clock and functions. Otherwise, the unit is unclocked and disabled. If the unit is unclocked, reads or writes to the unit will generate a bus fault.

Register 29: Run Mode Clock Gating Control Register 2 (RCGC2), offset 0x108

This register controls the clock gating logic. Each bit controls a clock enable for a given interface, function, or unit. If set, the unit receives a clock and functions. Otherwise, the unit is unclocked and disabled (saving power). If the unit is unclocked, reads or writes to the unit will generate a bus fault. The reset state of these bits is 0 (unclocked) unless otherwise noted, so that all functional units are disabled. It is the responsibility of software to enable the ports necessary for the application. Note that these registers may contain more bits than there are interfaces, functions, or units to control. This is to assure reasonable code compatibility with other family and future parts. **RCGC2** is the clock configuration register for running operation, **SCGC2** for Sleep operation, and **DCGC2** for Deep-Sleep operation. Setting the `ACG` bit in the **Run-Mode Clock Configuration (RCC)** register specifies that the system uses sleep modes.

Run Mode Clock Gating Control Register 2 (RCGC2)

Base 0x400F.E000
Offset 0x108
Type R/W, reset 0x00000000

	31	30	29	28	27	26	25	24	23	22	21	20	19	18	17	16
	reserved															
Type	RO	RO	RO	RO	RO	RO	RO	RO	RO	RO	RO	RO	RO	RO	RO	RO
Reset	0	0	0	0	0	0	0	0	0	0	0	0	0	0	0	0

	15	14	13	12	11	10	9	8	7	6	5	4	3	2	1	0
	reserved		UDMA	reserved								GPIOE	GPIOD	GPIOC	GPIOB	GPIOA
Type	RO	RO	R/W	RO	RO	RO	RO	RO	RO	RO	RO	R/W	R/W	R/W	R/W	R/W
Reset	0	0	0	0	0	0	0	0	0	0	0	0	0	0	0	0

Bit/Field	Name	Type	Reset	Description
31:14	reserved	RO	0	Software should not rely on the value of a reserved bit. To provide compatibility with future products, the value of a reserved bit should be preserved across a read-modify-write operation.
13	UDMA	R/W	0	UDMA Clock Gating Control. This bit controls the clock gating for Port H. If set, the unit receives a clock and functions. Otherwise, the unit is unclocked and disabled. If the unit is unclocked, reads or writes to the unit will generate a bus fault.
12:5	reserved	RO	0	Software should not rely on the value of a reserved bit. To provide compatibility with future products, the value of a reserved bit should be preserved across a read-modify-write operation.
4	GPIOE	R/W	0	Port E Clock Gating Control. This bit controls the clock gating for Port E. If set, the unit receives a clock and functions. Otherwise, the unit is unclocked and disabled. If the unit is unclocked, reads or writes to the unit will generate a bus fault.
3	GPIOD	R/W	0	Port D Clock Gating Control. This bit controls the clock gating for Port D. If set, the unit receives a clock and functions. Otherwise, the unit is unclocked and disabled. If the unit is unclocked, reads or writes to the unit will generate a bus fault.
2	GPIOC	R/W	0	Port C Clock Gating Control. This bit controls the clock gating for Port C. If set, the unit receives a clock and functions. Otherwise, the unit is unclocked and disabled. If the unit is unclocked, reads or writes to the unit will generate a bus fault.

Bit/Field	Name	Type	Reset	Description
1	GPIOB	R/W	0	Port B Clock Gating Control. This bit controls the clock gating for Port B. If set, the unit receives a clock and functions. Otherwise, the unit is unclocked and disabled. If the unit is unclocked, reads or writes to the unit will generate a bus fault.
0	GPIOA	R/W	0	Port A Clock Gating Control. This bit controls the clock gating for Port A. If set, the unit receives a clock and functions. Otherwise, the unit is unclocked and disabled. If the unit is unclocked, reads or writes to the unit will generate a bus fault.

Register 30: Sleep Mode Clock Gating Control Register 2 (SCGC2), offset 0x118

This register controls the clock gating logic. Each bit controls a clock enable for a given interface, function, or unit. If set, the unit receives a clock and functions. Otherwise, the unit is unclocked and disabled (saving power). If the unit is unclocked, reads or writes to the unit will generate a bus fault. The reset state of these bits is 0 (unclocked) unless otherwise noted, so that all functional units are disabled. It is the responsibility of software to enable the ports necessary for the application. Note that these registers may contain more bits than there are interfaces, functions, or units to control. This is to assure reasonable code compatibility with other family and future parts. **RCGC2** is the clock configuration register for running operation, **SCGC2** for Sleep operation, and **DCGC2** for Deep-Sleep operation. Setting the ACG bit in the **Run-Mode Clock Configuration (RCC)** register specifies that the system uses sleep modes.

Sleep Mode Clock Gating Control Register 2 (SCGC2)

Base 0x400F.E000
Offset 0x118
Type R/W, reset 0x00000000

	31	30	29	28	27	26	25	24	23	22	21	20	19	18	17	16
	reserved															
Type	RO	RO	RO	RO	RO	RO	RO	RO	RO	RO	RO	RO	RO	RO	RO	RO
Reset	0	0	0	0	0	0	0	0	0	0	0	0	0	0	0	0

	15	14	13	12	11	10	9	8	7	6	5	4	3	2	1	0
	reserved		UDMA	reserved								GPIOE	GPIOD	GPIOC	GPIOB	GPIOA
Type	RO	RO	R/W	RO	RO	RO	RO	RO	RO	RO	RO	R/W	R/W	R/W	R/W	R/W
Reset	0	0	0	0	0	0	0	0	0	0	0	0	0	0	0	0

Bit/Field	Name	Type	Reset	Description
31:14	reserved	RO	0	Software should not rely on the value of a reserved bit. To provide compatibility with future products, the value of a reserved bit should be preserved across a read-modify-write operation.
13	UDMA	R/W	0	UDMA Clock Gating Control. This bit controls the clock gating for Port H. If set, the unit receives a clock and functions. Otherwise, the unit is unclocked and disabled. If the unit is unclocked, reads or writes to the unit will generate a bus fault.
12:5	reserved	RO	0	Software should not rely on the value of a reserved bit. To provide compatibility with future products, the value of a reserved bit should be preserved across a read-modify-write operation.
4	GPIOE	R/W	0	Port E Clock Gating Control. This bit controls the clock gating for Port E. If set, the unit receives a clock and functions. Otherwise, the unit is unclocked and disabled. If the unit is unclocked, reads or writes to the unit will generate a bus fault.
3	GPIOD	R/W	0	Port D Clock Gating Control. This bit controls the clock gating for Port D. If set, the unit receives a clock and functions. Otherwise, the unit is unclocked and disabled. If the unit is unclocked, reads or writes to the unit will generate a bus fault.
2	GPIOC	R/W	0	Port C Clock Gating Control. This bit controls the clock gating for Port C. If set, the unit receives a clock and functions. Otherwise, the unit is unclocked and disabled. If the unit is unclocked, reads or writes to the unit will generate a bus fault.

Bit/Field	Name	Type	Reset	Description
1	GPIOB	R/W	0	Port B Clock Gating Control. This bit controls the clock gating for Port B. If set, the unit receives a clock and functions. Otherwise, the unit is unclocked and disabled. If the unit is unclocked, reads or writes to the unit will generate a bus fault.
0	GPIOA	R/W	0	Port A Clock Gating Control. This bit controls the clock gating for Port A. If set, the unit receives a clock and functions. Otherwise, the unit is unclocked and disabled. If the unit is unclocked, reads or writes to the unit will generate a bus fault.

Register 31: Deep Sleep Mode Clock Gating Control Register 2 (DCGC2), offset 0x128

This register controls the clock gating logic. Each bit controls a clock enable for a given interface, function, or unit. If set, the unit receives a clock and functions. Otherwise, the unit is unclocked and disabled (saving power). If the unit is unclocked, reads or writes to the unit will generate a bus fault. The reset state of these bits is 0 (unclocked) unless otherwise noted, so that all functional units are disabled. It is the responsibility of software to enable the ports necessary for the application. Note that these registers may contain more bits than there are interfaces, functions, or units to control. This is to assure reasonable code compatibility with other family and future parts. **RCGC2** is the clock configuration register for running operation, **SCGC2** for Sleep operation, and **DCGC2** for Deep-Sleep operation. Setting the ACG bit in the **Run-Mode Clock Configuration (RCC)** register specifies that the system uses sleep modes.

Deep Sleep Mode Clock Gating Control Register 2 (DCGC2)

Base 0x400F.E000
Offset 0x128
Type R/W, reset 0x00000000

	31	30	29	28	27	26	25	24	23	22	21	20	19	18	17	16
	reserved															
Type	RO	RO	RO	RO	RO	RO	RO	RO	RO	RO	RO	RO	RO	RO	RO	RO
Reset	0	0	0	0	0	0	0	0	0	0	0	0	0	0	0	0

	15	14	13	12	11	10	9	8	7	6	5	4	3	2	1	0
	reserved		UDMA	reserved								GPIOE	GPIOD	GPIOC	GPIOB	GPIOA
Type	RO	RO	R/W	RO	RO	RO	RO	RO	RO	RO	RO	R/W	R/W	R/W	R/W	R/W
Reset	0	0	0	0	0	0	0	0	0	0	0	0	0	0	0	0

Bit/Field	Name	Type	Reset	Description
31:14	reserved	RO	0	Software should not rely on the value of a reserved bit. To provide compatibility with future products, the value of a reserved bit should be preserved across a read-modify-write operation.
13	UDMA	R/W	0	UDMA Clock Gating Control. This bit controls the clock gating for Port H. If set, the unit receives a clock and functions. Otherwise, the unit is unclocked and disabled. If the unit is unclocked, reads or writes to the unit will generate a bus fault.
12:5	reserved	RO	0	Software should not rely on the value of a reserved bit. To provide compatibility with future products, the value of a reserved bit should be preserved across a read-modify-write operation.
4	GPIOE	R/W	0	Port E Clock Gating Control. This bit controls the clock gating for Port E. If set, the unit receives a clock and functions. Otherwise, the unit is unclocked and disabled. If the unit is unclocked, reads or writes to the unit will generate a bus fault.
3	GPIOD	R/W	0	Port D Clock Gating Control. This bit controls the clock gating for Port D. If set, the unit receives a clock and functions. Otherwise, the unit is unclocked and disabled. If the unit is unclocked, reads or writes to the unit will generate a bus fault.
2	GPIOC	R/W	0	Port C Clock Gating Control. This bit controls the clock gating for Port C. If set, the unit receives a clock and functions. Otherwise, the unit is unclocked and disabled. If the unit is unclocked, reads or writes to the unit will generate a bus fault.

Bit/Field	Name	Type	Reset	Description
1	GPIOB	R/W	0	Port B Clock Gating Control. This bit controls the clock gating for Port B. If set, the unit receives a clock and functions. Otherwise, the unit is unclocked and disabled. If the unit is unclocked, reads or writes to the unit will generate a bus fault.
0	GPIOA	R/W	0	Port A Clock Gating Control. This bit controls the clock gating for Port A. If set, the unit receives a clock and functions. Otherwise, the unit is unclocked and disabled. If the unit is unclocked, reads or writes to the unit will generate a bus fault.

Register 32: Software Reset Control 0 (SRCR0), offset 0x040

Writes to this register are masked by the bits in the **Device Capabilities 1 (DC1)** register.

Software Reset Control 0 (SRCR0)

Base 0x400F.E000
Offset 0x040
Type R/W, reset 0x00000000

	31	30	29	28	27	26	25	24	23	22	21	20	19	18	17	16
	reserved							CAN0	reserved			PWM	reserved			ADC
Type	RO	RO	RO	RO	RO	RO	RO	R/W	RO	RO	RO	R/W	RO	RO	RO	R/W
Reset	0	0	0	0	0	0	0	0	0	0	0	0	0	0	0	0

	15	14	13	12	11	10	9	8	7	6	5	4	3	2	1	0
	reserved												WDT	reserved		
Type	RO	RO	RO	RO	RO	RO	RO	RO	RO	RO	RO	RO	R/W	RO	RO	RO
Reset	0	0	0	0	0	0	0	0	0	0	0	0	0	0	0	0

Bit/Field	Name	Type	Reset	Description
31:25	reserved	RO	0	Software should not rely on the value of a reserved bit. To provide compatibility with future products, the value of a reserved bit should be preserved across a read-modify-write operation.
24	CAN0	R/W	0	CAN0 Reset Control. Reset control for CAN unit 0.
23:21	reserved	RO	0	Software should not rely on the value of a reserved bit. To provide compatibility with future products, the value of a reserved bit should be preserved across a read-modify-write operation.
20	PWM	R/W	0	PWM Reset Control. Reset control for PWM module.
19:17	reserved	RO	0	Software should not rely on the value of a reserved bit. To provide compatibility with future products, the value of a reserved bit should be preserved across a read-modify-write operation.
16	ADC	R/W	0	ADC0 Reset Control. Reset control for SAR ADC module 0.
15:4	reserved	RO	0	Software should not rely on the value of a reserved bit. To provide compatibility with future products, the value of a reserved bit should be preserved across a read-modify-write operation.
3	WDT	R/W	0	WDT Reset Control. Reset control for Watchdog unit.
2:0	reserved	RO	0	Software should not rely on the value of a reserved bit. To provide compatibility with future products, the value of a reserved bit should be preserved across a read-modify-write operation.

Register 33: Software Reset Control 1 (SRCR1), offset 0x044

Writes to this register are masked by the bits in the **Device Capabilities 2 (DC2)** register.

Software Reset Control 1 (SRCR1)

Base 0x400F.E000
Offset 0x044
Type R/W, reset 0x00000000

	31	30	29	28	27	26	25	24	23	22	21	20	19	18	17	16
	reserved												TIMER3	TIMER2	TIMER1	TIMER0
Type	RO	RO	RO	RO	RO	RO	RO	RO	RO	RO	RO	RO	R/W	R/W	R/W	R/W
Reset	0	0	0	0	0	0	0	0	0	0	0	0	0	0	0	0

	15	14	13	12	11	10	9	8	7	6	5	4	3	2	1	0
	reserved							QEI0	reserved			SSI0	reserved			UART0
Type	RO	RO	RO	RO	RO	RO	RO	R/W	RO	RO	RO	R/W	RO	RO	RO	R/W
Reset	0	0	0	0	0	0	0	0	0	0	0	0	0	0	0	0

Bit/Field	Name	Type	Reset	Description
31:20	reserved	RO	0	Software should not rely on the value of a reserved bit. To provide compatibility with future products, the value of a reserved bit should be preserved across a read-modify-write operation.
19	TIMER3	R/W	0	Timer 3 Reset Control. Reset control for General-Purpose Timer module 3.
18	TIMER2	R/W	0	Timer 2 Reset Control. Reset control for General-Purpose Timer module 2.
17	TIMER1	R/W	0	Timer 1 Reset Control. Reset control for General-Purpose Timer module 1.
16	TIMER0	R/W	0	Timer 0 Reset Control. Reset control for General-Purpose Timer module 0.
15:9	reserved	RO	0	Software should not rely on the value of a reserved bit. To provide compatibility with future products, the value of a reserved bit should be preserved across a read-modify-write operation.
8	QEI0	R/W	0	QEI0 Reset Control. Reset control for QEI unit 0.
7:5	reserved	RO	0	Software should not rely on the value of a reserved bit. To provide compatibility with future products, the value of a reserved bit should be preserved across a read-modify-write operation.
4	SSI0	R/W	0	SSI0 Reset Control. Reset control for SSI unit 0.
3:1	reserved	RO	0	Software should not rely on the value of a reserved bit. To provide compatibility with future products, the value of a reserved bit should be preserved across a read-modify-write operation.
0	UART0	R/W	0	UART0 Reset Control. Reset control for UART unit 0.

Register 34: Software Reset Control 2 (SRCR2), offset 0x048

Writes to this register are masked by the bits in the **Device Capabilities 4 (DC4)** register.

Software Reset Control 2 (SRCR2)

Base 0x400F.E000
Offset 0x048
Type R/W, reset 0x00000000

	31	30	29	28	27	26	25	24	23	22	21	20	19	18	17	16
	reserved															
Type	RO	RO	RO	RO	RO	RO	RO	RO	RO	RO	RO	RO	RO	RO	RO	RO
Reset	0	0	0	0	0	0	0	0	0	0	0	0	0	0	0	0

	15	14	13	12	11	10	9	8	7	6	5	4	3	2	1	0
	reserved		UDMA	reserved								GPIOE	GPIOD	GPIOC	GPIOB	GPIOA
Type	RO	RO	R/W	RO	RO	RO	RO	RO	RO	RO	RO	R/W	R/W	R/W	R/W	R/W
Reset	0	0	0	0	0	0	0	0	0	0	0	0	0	0	0	0

Bit/Field	Name	Type	Reset	Description
31:14	reserved	RO	0	Software should not rely on the value of a reserved bit. To provide compatibility with future products, the value of a reserved bit should be preserved across a read-modify-write operation.
13	UDMA	R/W	0	UDMA Reset Control. Reset control for uDMA unit.
12:5	reserved	RO	0	Software should not rely on the value of a reserved bit. To provide compatibility with future products, the value of a reserved bit should be preserved across a read-modify-write operation.
4	GPIOE	R/W	0	Port E Reset Control. Reset control for GPIO Port E.
3	GPIOD	R/W	0	Port D Reset Control. Reset control for GPIO Port D.
2	GPIOC	R/W	0	Port C Reset Control. Reset control for GPIO Port C.
1	GPIOB	R/W	0	Port B Reset Control. Reset control for GPIO Port B.
0	GPIOA	R/W	0	Port A Reset Control. Reset control for GPIO Port A.

6 Internal Memory

The LM3S2678 microcontroller comes with 32 KB of bit-banded SRAM and 128 KB of flash memory. The flash controller provides a user-friendly interface, making flash programming a simple task. Flash protection can be applied to the flash memory on a 2-KB block basis.

6.1 Block Diagram

Figure 6-1 on page 233 illustrates the Flash functions. The dashed boxes in the figure indicate registers residing in the System Control module rather than the Flash Control module.

Figure 6-1. Flash Block Diagram

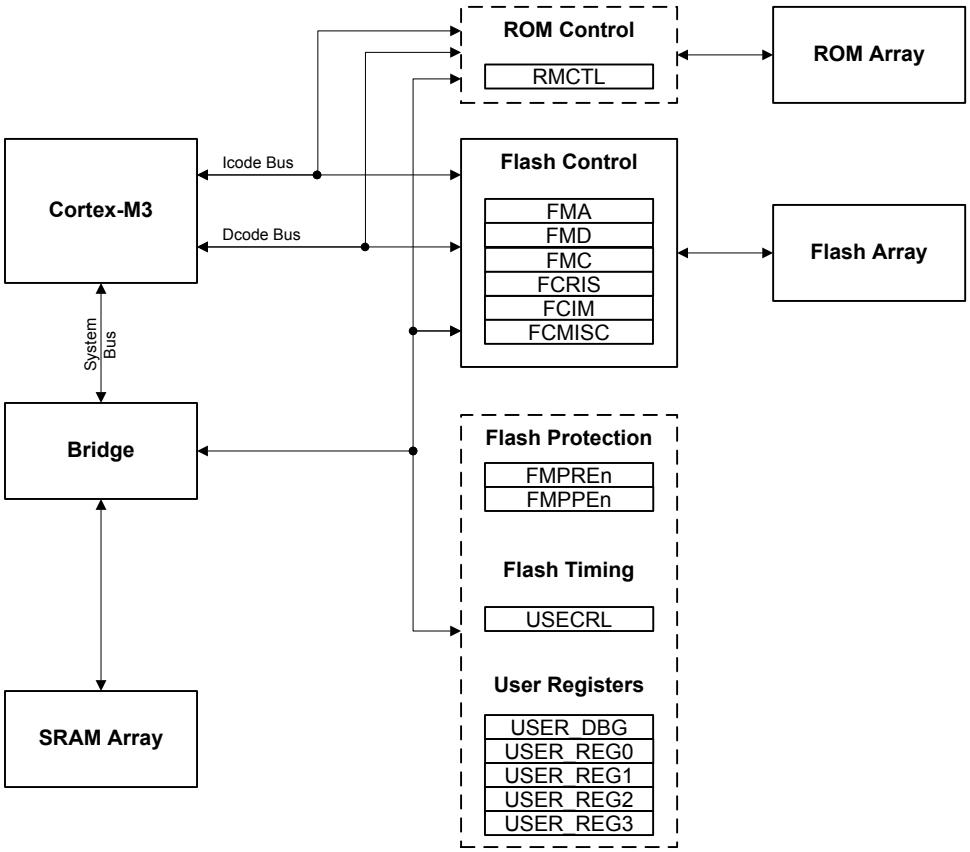

6.2 Functional Description

This section describes the functionality of the SRAM, ROM, and Flash memories.

6.2.1 SRAM Memory

Note: The SRAM memory is implemented using two 32-bit wide SRAM banks (separate SRAM arrays). The banks are partitioned so that one bank contains all even words (the even bank) and the other contains all odd words (the odd bank). A write access that is followed immediately by a read access to the same bank will incur a stall of a single clock cycle. However, a write to one bank followed by a read of the other bank can occur in successive clock cycles without incurring any delay.

The internal SRAM of the Stellaris® devices is located at address 0x2000.0000 of the device memory map. To reduce the number of time consuming read-modify-write (RMW) operations, ARM has introduced *bit-banding* technology in the Cortex-M3 processor. With a bit-band-enabled processor, certain regions in the memory map (SRAM and peripheral space) can use address aliases to access individual bits in a single, atomic operation.

The bit-band alias is calculated by using the formula:

```
bit-band alias = bit-band base + (byte offset * 32) + (bit number * 4)
```

For example, if bit 3 at address 0x2000.1000 is to be modified, the bit-band alias is calculated as:

```
0x2200.0000 + (0x1000 * 32) + (3 * 4) = 0x2202.000C
```

With the alias address calculated, an instruction performing a read/write to address 0x2202.000C allows direct access to only bit 3 of the byte at address 0x2000.1000.

For details about bit-banding, see “Bit-Banding” on page 72.

6.2.2 ROM Memory

The ROM of the Stellaris device is located at address 0x0100.0000 of the device memory map and contains the following components:

- Stellaris Boot Loader and vector table (see “Boot Loader” on page 685)
- Stellaris Peripheral Driver Library (DriverLib) release for product-specific peripherals and interfaces (see “ROM DriverLib Functions” on page 690)

6.2.3 Flash Memory

The flash is organized as a set of 1-KB blocks that can be individually erased. Erasing a block causes the entire contents of the block to be reset to all 1s. An individual 32-bit word can be programmed to change bits that are currently 1 to a 0. These blocks are paired into a set of 2-KB blocks that can be individually protected. The protection allows blocks to be marked as read-only or execute-only, providing different levels of code protection. Read-only blocks cannot be erased or programmed, protecting the contents of those blocks from being modified. Execute-only blocks cannot be erased or programmed, and can only be read by the controller instruction fetch mechanism, protecting the contents of those blocks from being read by either the controller or by a debugger.

6.2.3.1 Flash Memory Timing

The timing for the flash is automatically handled by the flash controller. However, in order to do so, it must know the clock rate of the system in order to time its internal signals properly. The number of clock cycles per microsecond must be provided to the flash controller for it to accomplish this timing. It is software's responsibility to keep the flash controller updated with this information via the **USec Reload (USECRL)** register.

On reset, the **USECRL** register is loaded with a value that configures the flash timing so that it works with the maximum clock rate of the part. If software changes the system operating frequency, the new operating frequency minus 1 (in MHz) must be loaded into **USECRL** before any flash modifications are attempted. For example, if the device is operating at a speed of 20 MHz, a value of 0x13 (20-1) must be written to the **USECRL** register.

6.2.3.2 Flash Memory Protection

The user is provided two forms of flash protection per 2-KB flash blocks in two pairs of 32-bit wide registers. The protection policy for each form is controlled by individual bits (per policy per block) in the **FMPPEn** and **FMPREn** registers.

- **Flash Memory Protection Program Enable (FMPPEn)**: If set, the block may be programmed (written) or erased. If cleared, the block may not be changed.
- **Flash Memory Protection Read Enable (FMPREn)**: If a bit is set, the corresponding block may be executed or read by software or debuggers. If a bit is cleared, the corresponding block may only be executed, and contents of the memory block are prohibited from being read as data.

The policies may be combined as shown in Table 6-1 on page 235.

Table 6-1. Flash Protection Policy Combinations

FMPPEn	FMPREn	Protection
0	0	Execute-only protection. The block may only be executed and may not be written or erased. This mode is used to protect code.
1	0	The block may be written, erased or executed, but not read. This combination is unlikely to be used.
0	1	Read-only protection. The block may be read or executed but may not be written or erased. This mode is used to lock the block from further modification while allowing any read or execute access.
1	1	No protection. The block may be written, erased, executed or read.

A Flash memory access that attempts to read a read-protected block (**FMPREn** bit is set) is prohibited and generates a bus fault. A Flash memory access that attempts to program or erase a program-protected block (**FMPPEn** bit is set) is prohibited and can optionally generate an interrupt (by setting the AMASK bit in the **Flash Controller Interrupt Mask (FCIM)** register) to alert software developers of poorly behaving software during the development and debug phases.

The factory settings for the **FMPREn** and **FMPPEn** registers are a value of 1 for all implemented banks. These settings create a policy of open access and programmability. The register bits may be changed by clearing the specific register bit. The changes are not permanent until the register is committed (saved), at which point the bit change is permanent. If a bit is changed from a 1 to a 0 and not committed, it may be restored by executing a power-on reset sequence. The changes are committed using the **Flash Memory Control (FMC)** register. Details on programming these bits are discussed in “Nonvolatile Register Programming” on page 237.

6.2.3.3 Execute-Only Protection

Execute-only protection prevents both modification and visibility to a protected flash block. This mode is intended to be used in situations where a device requires debug capability, yet portions of the application space must be protected from external access. An example of this is a company who wishes to sell Stellaris devices with their proprietary software pre-programmed, yet allow the end user to add custom code to an unprotected region of the flash (such as a motor control module with a customizable motor configuration section in flash).

Literal data introduces a complication to the protection mechanism. When C code is compiled and linked, literal data (constants, and so on) is typically placed in the text section, between functions, by the compiler. The literal data is accessed at run time through the use of the LDR instruction, which loads the data from memory using a PC-relative memory address. The execution of the LDR instruction generates a read transaction across the Cortex-M3's DCode bus, which is subject to the

execute-only protection mechanism. If the accessed block is marked as execute only, the transaction is blocked, and the processor is prevented from loading the constant data and, therefore, inhibiting correct execution. Therefore, using execute-only protection requires that literal data be handled differently. There are three ways to address this:

1. Use a compiler that allows literal data to be collected into a separate section that is put into one or more read-enabled flash blocks. Note that the LDR instruction may use a PC-relative address—-in which case the literal pool cannot be located outside the span of the offset—-or the software may reserve a register to point to the base address of the literal pool and the LDR offset is relative to the beginning of the pool.
2. Use a compiler that generates literal data from arithmetic instruction immediate data and subsequent computation.
3. Use method 1 or 2, but in assembly language, if the compiler does not support either method.

6.2.3.4 Read-Only Protection

Read-only protection prevents the contents of the flash block from being re-programmed, while still allowing the content to be read by processor or the debug interface. Note that if a **FMPREn** bit is cleared, all read accesses to the Flash memory block are disallowed, including any data accesses. Care must be taken not to store required data in a Flash memory block that has the associated **FMPREn** bit cleared.

The read-only mode does not prevent read access to the stored program, but it does provide protection against accidental (or malicious) erasure or programming. Read-only is especially useful for utilities like the boot loader when the debug interface is permanently disabled. In such combinations, the boot loader, which provides access control to the Flash memory, is protected from being erased or modified.

6.2.3.5 Permanently Disabling Debug

For extremely sensitive applications, the debug interface to the processor and peripherals can be permanently disabled, blocking all accesses to the device through the JTAG or SWD interfaces. With the debug interface disabled, it is still possible to perform standard IEEE instructions (such as boundary scan operations), but access to the processor and peripherals is blocked.

The `DBG0` and `DBG1` bits of the **User Debug (USER_DBG)** register control whether the debug interface is turned on or off.

The debug interface should not be permanently disabled without providing some mechanism—-such as the boot loader—-to provide customer-installable updates or bug fixes. Disabling the debug interface is permanent and cannot be reversed.

6.2.3.6 Interrupts

The Flash memory controller can generate interrupts when the following conditions are observed:

- Programming Interrupt - signals when a program or erase action is complete.
- Access Interrupt - signals when a program or erase action has been attempted on a 2-kB block of memory that is protected by its corresponding **FMPPEn** bit.

The interrupt events that can trigger a controller-level interrupt are defined in the **Flash Controller Masked Interrupt Status (FCMIS)** register (see page 246) by setting the corresponding `MASK` bits. If interrupts are not used, the raw interrupt status is always visible via the **Flash Controller Raw Interrupt Status (FCRIS)** register (see page 245).

Interrupts are always cleared (for both the **FCMIS** and **FCRIS** registers) by writing a 1 to the corresponding bit in the **Flash Controller Masked Interrupt Status and Clear (FCMISC)** register (see page 247).

6.3 Flash Memory Initialization and Configuration

6.3.1 Flash Programming

The Stellaris devices provide a user-friendly interface for flash programming. All erase/program operations are handled via three registers: **FMA**, **FMD**, and **FMC**.

During a Flash memory operation (write, page erase, or mass erase) access to the Flash memory is inhibited. As a result, instruction and literal fetches are held off until the Flash memory operation is complete. If instruction execution is required during a Flash memory operation, the code that is executing must be placed in SRAM and executed from there while the flash operation is in progress.

6.3.1.1 To program a 32-bit word

1. Write source data to the **FMD** register.
2. Write the target address to the **FMA** register.
3. Write the flash write key and the `WRITE` bit (a value of 0xA442.0001) to the **FMC** register.
4. Poll the **FMC** register until the `WRITE` bit is cleared.

6.3.1.2 To perform an erase of a 1-KB page

1. Write the page address to the **FMA** register.
2. Write the flash write key and the `ERASE` bit (a value of 0xA442.0002) to the **FMC** register.
3. Poll the **FMC** register until the `ERASE` bit is cleared.

6.3.1.3 To perform a mass erase of the flash

1. Write the flash write key and the `MERASE` bit (a value of 0xA442.0004) to the **FMC** register.
2. Poll the **FMC** register until the `MERASE` bit is cleared.

6.3.2 Nonvolatile Register Programming

Note: The **USER_DBG** register requires a POR before the committed changes take effect.

This section discusses how to update registers that are resident within the Flash memory itself. These registers exist in a separate space from the main Flash memory array and are not affected by an ERASE or MASS ERASE operation. The bits in these registers can be changed from 1 to 0 with a write operation. Prior to being committed, the register contents are unaffected by any reset condition except power-on reset, which returns the register contents to the original value. By committing the register values using the `COMT` bit in the **FMC** register, the register contents become nonvolatile and are therefore retained following power cycling. Once the register contents are committed, the only way to restore the factory default values is to perform the sequence described in the section called “Recovering a "Locked" Device” on page 160.

With the exception of the **USER_DBG** register, the settings in these registers can be tested before committing them to Flash memory. For the **USER_DBG** register, the data to be written is loaded

into the **FMD** register before it is committed. The **FMD** register is read only and does not allow the **USER_DBG** operation to be tried before committing it to nonvolatile memory.

Important: The Flash memory resident registers can only have bits changed from 1 to 0 by user programming and can only be committed once. After being committed, these registers can only be restored to their factory default values only by performing the sequence described in the section called “Recovering a "Locked" Device” on page 160. The mass erase of the main Flash memory array caused by the sequence is performed prior to restoring these registers.

In addition, the **USER_REG0**, **USER_REG1**, **USER_REG2**, **USER_REG3**, and **USER_DBG** registers each use bit 31 (`NW`) to indicate that they have not been committed and bits in the register may be changed from 1 to 0. Table 6-2 on page 238 provides the **FMA** address required for commitment of each of the registers and the source of the data to be written when the **FMC** register is written with a value of 0xA442.0008. After writing the `COMT` bit, the user may poll the **FMC** register to wait for the commit operation to complete.

Table 6-2. User-Programmable Flash Memory Resident Registers

Register to be Committed	FMA Value	Data Source
FMPRE0	0x0000.0000	FMPRE0
FMPRE1	0x0000.0002	FMPRE1
FMPPE0	0x0000.0001	FMPPE0
FMPPE1	0x0000.0003	FMPPE1
USER_REG0	0x8000.0000	USER_REG0
USER_REG1	0x8000.0001	USER_REG1
USER_REG2	0x8000.0002	USER_REG2
USER_REG3	0x8000.0003	USER_REG3
USER_DBG	0x7510.0000	FMD

6.4 Register Map

Table 6-3 on page 238 lists the ROM Controller register and the Flash memory and control registers. The offset listed is a hexadecimal increment to the register's address. The **FMA**, **FMD**, **FMC**, **FCRIS**, **FCIM**, and **FCMISC** register offsets are relative to the Flash memory control base address of 0x400F.D000. The ROM and Flash memory protection register offsets are relative to the System Control base address of 0x400F.E000.

Table 6-3. Flash Register Map

Offset	Name	Type	Reset	Description	See page
ROM Registers (System Control Offset)					
0x0F0	RMCTL	R/W1C	-	ROM Control	240
Flash Memory Control Registers (Flash Control Offset)					
0x000	FMA	R/W	0x0000.0000	Flash Memory Address	241
0x004	FMD	R/W	0x0000.0000	Flash Memory Data	242
0x008	FMC	R/W	0x0000.0000	Flash Memory Control	243

Table 6-3. Flash Register Map *(continued)*

Offset	Name	Type	Reset	Description	See page
0x00C	FCRIS	RO	0x0000.0000	Flash Controller Raw Interrupt Status	245
0x010	FCIM	R/W	0x0000.0000	Flash Controller Interrupt Mask	246
0x014	FCMISC	R/W1C	0x0000.0000	Flash Controller Masked Interrupt Status and Clear	247
Flash Memory Protection Registers (System Control Offset)					
0x130	FMPRE0	R/W	0xFFFF.FFFF	Flash Memory Protection Read Enable 0	250
0x200	FMPRE0	R/W	0xFFFF.FFFF	Flash Memory Protection Read Enable 0	250
0x134	FMPPE0	R/W	0xFFFF.FFFF	Flash Memory Protection Program Enable 0	251
0x400	FMPPE0	R/W	0xFFFF.FFFF	Flash Memory Protection Program Enable 0	251
0x140	USECRL	R/W	0x31	USec Reload	249
0x1D0	USER_DBG	R/W	0xFFFF.FFFE	User Debug	252
0x1E0	USER_REG0	R/W	0xFFFF.FFFF	User Register 0	253
0x1E4	USER_REG1	R/W	0xFFFF.FFFF	User Register 1	254
0x1E8	USER_REG2	R/W	0xFFFF.FFFF	User Register 2	255
0x1EC	USER_REG3	R/W	0xFFFF.FFFF	User Register 3	256
0x204	FMPRE1	R/W	0xFFFF.FFFF	Flash Memory Protection Read Enable 1	257
0x208	FMPRE2	R/W	0x0000.0000	Flash Memory Protection Read Enable 2	258
0x20C	FMPRE3	R/W	0x0000.0000	Flash Memory Protection Read Enable 3	259
0x404	FMPPE1	R/W	0xFFFF.FFFF	Flash Memory Protection Program Enable 1	260
0x408	FMPPE2	R/W	0x0000.0000	Flash Memory Protection Program Enable 2	261
0x40C	FMPPE3	R/W	0x0000.0000	Flash Memory Protection Program Enable 3	262

6.5 ROM Register Descriptions (System Control Offset)

This section lists and describes the ROM Controller registers, in numerical order by address offset. Registers in this section are relative to the System Control base address of 0x400F.E000.

Register 1: ROM Control (RMCTL), offset 0x0F0

This register provides control of the ROM controller state.

ROM Control (RMCTL)

Base 0x400F.E000
Offset 0x0F0
Type R/W1C, reset -

	31	30	29	28	27	26	25	24	23	22	21	20	19	18	17	16
	reserved															
Type	RO	RO	RO	RO	RO	RO	RO	RO	RO	RO	RO	RO	RO	RO	RO	RO
Reset	0	0	0	0	0	0	0	0	0	0	0	0	0	0	0	0

	15	14	13	12	11	10	9	8	7	6	5	4	3	2	1	0
	reserved															BA
Type	RO	RO	RO	RO	RO	RO	RO	RO	RO	RO	RO	RO	RO	RO	RO	R/W1C
Reset	0	0	0	0	0	0	0	0	0	0	0	0	0	0	0	-

Bit/Field	Name	Type	Reset	Description
31:1	reserved	RO	0x0	Software should not rely on the value of a reserved bit. To provide compatibility with future products, the value of a reserved bit should be preserved across a read-modify-write operation.
0	BA	R/W1C	-	Boot Alias ■ The device has ROM. ■ The first two words of the Flash memory contain 0xFFFF.FFFF. This bit is cleared by writing a 1 to this bit position. When the BA bit is set, the boot alias is in effect and the ROM appears at address 0x0. When the BA bit is clear, the Flash appears at address 0x0.

6.6 Flash Register Descriptions (Flash Control Offset)

This section lists and describes the Flash Memory registers, in numerical order by address offset. Registers in this section are relative to the Flash control base address of 0x400F.D000.

Register 2: Flash Memory Address (FMA), offset 0x000

During a write operation, this register contains a 4-byte-aligned address and specifies where the data is written. During erase operations, this register contains a 1 KB-aligned address and specifies which page is erased. Note that the alignment requirements must be met by software or the results of the operation are unpredictable.

Flash Memory Address (FMA)

Base 0x400F.D000
Offset 0x000
Type R/W, reset 0x0000.0000

	31	30	29	28	27	26	25	24	23	22	21	20	19	18	17	16
	reserved															OFFSET
Type	RO	RO	RO	RO	RO	RO	RO	RO	RO	RO	RO	RO	RO	RO	RO	R/W
Reset	0	0	0	0	0	0	0	0	0	0	0	0	0	0	0	0

	15	14	13	12	11	10	9	8	7	6	5	4	3	2	1	0
	OFFSET															
Type	R/W	R/W	R/W	R/W	R/W	R/W	R/W	R/W	R/W	R/W	R/W	R/W	R/W	R/W	R/W	R/W
Reset	0	0	0	0	0	0	0	0	0	0	0	0	0	0	0	0

Bit/Field	Name	Type	Reset	Description
31:17	reserved	RO	0x0	Software should not rely on the value of a reserved bit. To provide compatibility with future products, the value of a reserved bit should be preserved across a read-modify-write operation.
16:0	OFFSET	R/W	0x0	Address Offset Address offset in flash where operation is performed, except for nonvolatile registers (see “Nonvolatile Register Programming” on page 237 for details on values for this field).

Register 3: Flash Memory Data (FMD), offset 0x004

This register contains the data to be written during the programming cycle or read during the read cycle. Note that the contents of this register are undefined for a read access of an execute-only block. This register is not used during the erase cycles.

Flash Memory Data (FMD)

Base 0x400F.D000
Offset 0x004
Type R/W, reset 0x0000.0000

	31	30	29	28	27	26	25	24	23	22	21	20	19	18	17	16
	DATA															
Type	R/W	R/W	R/W	R/W	R/W	R/W	R/W	R/W	R/W	R/W	R/W	R/W	R/W	R/W	R/W	R/W
Reset	0	0	0	0	0	0	0	0	0	0	0	0	0	0	0	0

	15	14	13	12	11	10	9	8	7	6	5	4	3	2	1	0
	DATA															
Type	R/W	R/W	R/W	R/W	R/W	R/W	R/W	R/W	R/W	R/W	R/W	R/W	R/W	R/W	R/W	R/W
Reset	0	0	0	0	0	0	0	0	0	0	0	0	0	0	0	0

Bit/Field	Name	Type	Reset	Description
31:0	DATA	R/W	0x0	Data Value Data value for write operation.

Register 4: Flash Memory Control (FMC), offset 0x008

When this register is written, the flash controller initiates the appropriate access cycle for the location specified by the **Flash Memory Address (FMA)** register (see page 241). If the access is a write access, the data contained in the **Flash Memory Data (FMD)** register (see page 242) is written.

This is the final register written and initiates the memory operation. There are four control bits in the lower byte of this register that, when set, initiate the memory operation. The most used of these register bits are the `ERASE` and `WRITE` bits.

It is a programming error to write multiple control bits and the results of such an operation are unpredictable.

Flash Memory Control (FMC)

Base 0x400F.D000
Offset 0x008
Type R/W, reset 0x0000.0000

	31	30	29	28	27	26	25	24	23	22	21	20	19	18	17	16
	WRKEY															
Type	WO	WO	WO	WO	WO	WO	WO	WO	WO	WO	WO	WO	WO	WO	WO	WO
Reset	0	0	0	0	0	0	0	0	0	0	0	0	0	0	0	0

	15	14	13	12	11	10	9	8	7	6	5	4	3	2	1	0
	reserved												COMT	MERASE	ERASE	WRITE
Type	RO	RO	RO	RO	RO	RO	RO	RO	RO	RO	RO	RO	R/W	R/W	R/W	R/W
Reset	0	0	0	0	0	0	0	0	0	0	0	0	0	0	0	0

Bit/Field	Name	Type	Reset	Description
31:16	WRKEY	WO	0x0	Flash Write Key This field contains a write key, which is used to minimize the incidence of accidental flash writes. The value 0xA442 must be written into this field for a write to occur. Writes to the **FMC** register without this `WRKEY` value are ignored. A read of this field returns the value 0.
15:4	reserved	RO	0x0	Software should not rely on the value of a reserved bit. To provide compatibility with future products, the value of a reserved bit should be preserved across a read-modify-write operation.
3	COMT	R/W	0	Commit Register Value Commit (write) of register value to nonvolatile storage. A write of 0 has no effect on the state of this bit. If read, the state of the previous commit access is provided. If the previous commit access is complete, a 0 is returned; otherwise, if the commit access is not complete, a 1 is returned. This can take up to 50 µs.
2	MERASE	R/W	0	Mass Erase Flash Memory If this bit is set, the flash main memory of the device is all erased. A write of 0 has no effect on the state of this bit. If read, the state of the previous mass erase access is provided. If the previous mass erase access is complete, a 0 is returned; otherwise, if the previous mass erase access is not complete, a 1 is returned. This can take up to 250 ms.

Bit/Field	Name	Type	Reset	Description
1	ERASE	R/W	0	Erase a Page of Flash Memory If this bit is set, the page of flash main memory as specified by the contents of **FMA** is erased. A write of 0 has no effect on the state of this bit. If read, the state of the previous erase access is provided. If the previous erase access is complete, a 0 is returned; otherwise, if the previous erase access is not complete, a 1 is returned. This can take up to 25 ms.
0	WRITE	R/W	0	Write a Word into Flash Memory If this bit is set, the data stored in **FMD** is written into the location as specified by the contents of **FMA**. A write of 0 has no effect on the state of this bit. If read, the state of the previous write update is provided. If the previous write access is complete, a 0 is returned; otherwise, if the write access is not complete, a 1 is returned. This can take up to 50 µs.

Register 5: Flash Controller Raw Interrupt Status (FCRIS), offset 0x00C

This register indicates that the flash controller has an interrupt condition. An interrupt is only signaled if the corresponding **FCIM** register bit is set.

Flash Controller Raw Interrupt Status (FCRIS)

Base 0x400F.D000
Offset 0x00C
Type RO, reset 0x0000.0000

	31	30	29	28	27	26	25	24	23	22	21	20	19	18	17	16
	reserved															
Type	RO	RO	RO	RO	RO	RO	RO	RO	RO	RO	RO	RO	RO	RO	RO	RO
Reset	0	0	0	0	0	0	0	0	0	0	0	0	0	0	0	0

	15	14	13	12	11	10	9	8	7	6	5	4	3	2	1	0
	reserved														PRIS	ARIS
Type	RO	RO	RO	RO	RO	RO	RO	RO	RO	RO	RO	RO	RO	RO	RO	RO
Reset	0	0	0	0	0	0	0	0	0	0	0	0	0	0	0	0

Bit/Field	Name	Type	Reset	Description
31:2	reserved	RO	0x0	Software should not rely on the value of a reserved bit. To provide compatibility with future products, the value of a reserved bit should be preserved across a read-modify-write operation.
1	PRIS	RO	0	Programming Raw Interrupt Status This bit provides status on programming cycles which are write or erase actions generated through the **FMC** register bits (see page 243). Value Description 1 The programming cycle has completed. 0 The programming cycle has not completed. This status is sent to the interrupt controller when the `PMASK` bit in the **FCIM** register is set. This bit is cleared by writing a 1 to the `PMISC` bit in the **FCMISC** register.
0	ARIS	RO	0	Access Raw Interrupt Status Value Description 1 A program or erase action was attempted on a block of Flash memory that contradicts the protection policy for that block as set in the **FMPPEn** registers. 0 No access has tried to improperly program or erase the Flash memory. This status is sent to the interrupt controller when the `AMASK` bit in the **FCIM** register is set. This bit is cleared by writing a 1 to the `AMISC` bit in the **FCMISC** register.

Register 6: Flash Controller Interrupt Mask (FCIM), offset 0x010

This register controls whether the flash controller generates interrupts to the controller.

Flash Controller Interrupt Mask (FCIM)

Base 0x400F.D000
Offset 0x010
Type R/W, reset 0x0000.0000

	31	30	29	28	27	26	25	24	23	22	21	20	19	18	17	16
	reserved															
Type	RO	RO	RO	RO	RO	RO	RO	RO	RO	RO	RO	RO	RO	RO	RO	RO
Reset	0	0	0	0	0	0	0	0	0	0	0	0	0	0	0	0

	15	14	13	12	11	10	9	8	7	6	5	4	3	2	1	0
	reserved														PMASK	AMASK
Type	RO	RO	RO	RO	RO	RO	RO	RO	RO	RO	RO	RO	RO	RO	R/W	R/W
Reset	0	0	0	0	0	0	0	0	0	0	0	0	0	0	0	0

Bit/Field	Name	Type	Reset	Description
31:2	reserved	RO	0x0	Software should not rely on the value of a reserved bit. To provide compatibility with future products, the value of a reserved bit should be preserved across a read-modify-write operation.
1	PMASK	R/W	0	Programming Interrupt Mask This bit controls the reporting of the programming raw interrupt status to the interrupt controller. Value Description 1 An interrupt is sent to the interrupt controller when the `PRIS` bit is set. 0 The `PRIS` interrupt is suppressed and not sent to the interrupt controller.
0	AMASK	R/W	0	Access Interrupt Mask This bit controls the reporting of the access raw interrupt status to the interrupt controller. Value Description 1 An interrupt is sent to the interrupt controller when the `ARIS` bit is set. 0 The `ARIS` interrupt is suppressed and not sent to the interrupt controller.

Register 7: Flash Controller Masked Interrupt Status and Clear (FCMISC), offset 0x014

This register provides two functions. First, it reports the cause of an interrupt by indicating which interrupt source or sources are signalling the interrupt. Second, it serves as the method to clear the interrupt reporting.

Flash Controller Masked Interrupt Status and Clear (FCMISC)

Base 0x400F.D000
Offset 0x014
Type R/W1C, reset 0x0000.0000

	31	30	29	28	27	26	25	24	23	22	21	20	19	18	17	16
	reserved															
Type	RO	RO	RO	RO	RO	RO	RO	RO	RO	RO	RO	RO	RO	RO	RO	RO
Reset	0	0	0	0	0	0	0	0	0	0	0	0	0	0	0	0

	15	14	13	12	11	10	9	8	7	6	5	4	3	2	1	0
	reserved														PMISC	AMISC
Type	RO	RO	RO	RO	RO	RO	RO	RO	RO	RO	RO	RO	RO	RO	R/W1C	R/W1C
Reset	0	0	0	0	0	0	0	0	0	0	0	0	0	0	0	0

Bit/Field	Name	Type	Reset	Description
31:2	reserved	RO	0x0	Software should not rely on the value of a reserved bit. To provide compatibility with future products, the value of a reserved bit should be preserved across a read-modify-write operation.
1	PMISC	R/W1C	0	Programming Masked Interrupt Status and Clear Value Description 1 When read, a 1 indicates that an unmasked interrupt was signaled because a programming cycle completed. Writing a 1 to this bit clears `PMISC` and also the `PRIS` bit in the **FCRIS** register (see page 245). 0 When read, a 0 indicates that a programming cycle complete interrupt has not occurred. A write of 0 has no effect on the state of this bit.
0	AMISC	R/W1C	0	Access Masked Interrupt Status and Clear Value Description 1 When read, a 1 indicates that an unmasked interrupt was signaled because a program or erase action was attempted on a block of Flash memory that contradicts the protection policy for that block as set in the **FMPPEn** registers. Writing a 1 to this bit clears `AMISC` and also the `ARIS` bit in the **FCRIS** register (see page 245). 0 When read, a 0 indicates that no improper accesses have occurred. A write of 0 has no effect on the state of this bit.

6.7 Flash Register Descriptions (System Control Offset)

The remainder of this section lists and describes the Flash Memory registers, in numerical order by address offset. Registers in this section are relative to the System Control base address of 0x400F.E000.

Register 8: USec Reload (USECRL), offset 0x140

Note: Offset is relative to System Control base address of 0x400F.E000

This register is provided as a means of creating a 1-µs tick divider reload value for the flash controller. The internal flash has specific minimum and maximum requirements on the length of time the high voltage write pulse can be applied. It is required that this register contain the operating frequency (in MHz -1) whenever the flash is being erased or programmed. The user is required to change this value if the clocking conditions are changed for a flash erase/program operation.

USec Reload (USECRL)

Base 0x400F.E000
Offset 0x140
Type R/W, reset 0x31

	31	30	29	28	27	26	25	24	23	22	21	20	19	18	17	16
	reserved															
Type	RO	RO	RO	RO	RO	RO	RO	RO	RO	RO	RO	RO	RO	RO	RO	RO
Reset	0	0	0	0	0	0	0	0	0	0	0	0	0	0	0	0

	15	14	13	12	11	10	9	8	7	6	5	4	3	2	1	0
	reserved								USEC							
Type	RO	RO	RO	RO	RO	RO	RO	RO	R/W	R/W	R/W	R/W	R/W	R/W	R/W	R/W
Reset	0	0	0	0	0	0	0	0	0	0	1	1	0	0	0	1

Bit/Field	Name	Type	Reset	Description
31:8	reserved	RO	0x0	Software should not rely on the value of a reserved bit. To provide compatibility with future products, the value of a reserved bit should be preserved across a read-modify-write operation.
7:0	USEC	R/W	0x31	Microsecond Reload Value MHz -1 of the controller clock when the flash is being erased or programmed. If the maximum system frequency is being used, USEC should be set to 0x31 (50 MHz) whenever the flash is being erased or programmed.

Register 9: Flash Memory Protection Read Enable 0 (FMPRE0), offset 0x130 and 0x200

Note: This register is aliased for backwards compatability.

Note: Offset is relative to System Control base address of 0x400FE000.

This register stores the read-only protection bits for each 2-KB flash block (**FMPPEn** stores the execute-only bits). Flash memory up to a total of 64 KB is controlled by this register. Other **FMPREn** registers (if any) provide protection for other 64K blocks. This register is loaded during the power-on reset sequence. The factory settings for the **FMPREn** and **FMPPEn** registers are a value of 1 for all implemented banks. This achieves a policy of open access and programmability. The register bits may be changed by writing the specific register bit. However, this register is R/W0; the user can only change the protection bit from a 1 to a 0 (and may NOT change a 0 to a 1). The changes are not permanent until the register is committed (saved), at which point the bit change is permanent. If a bit is changed from a 1 to a 0 and not committed, it may be restored by executing a power-on reset sequence. The reset value shown only applies to power-on reset; any other type of reset does not affect this register. Once committed, the only way to restore the factory default value of this register is to perform the "Recover Locked Device" sequence detailed in the JTAG chapter. For additional information, see the "Flash Memory Protection" section.

Flash Memory Protection Read Enable 0 (FMPRE0)

Base 0x400F.E000
Offset 0x130 and 0x200
Type R/W, reset 0xFFFF.FFFF

	31	30	29	28	27	26	25	24	23	22	21	20	19	18	17	16
	READ_ENABLE															
Type	R/W	R/W	R/W	R/W	R/W	R/W	R/W	R/W	R/W	R/W	R/W	R/W	R/W	R/W	R/W	R/W
Reset	1	1	1	1	1	1	1	1	1	1	1	1	1	1	1	1

	15	14	13	12	11	10	9	8	7	6	5	4	3	2	1	0
	READ_ENABLE															
Type	R/W	R/W	R/W	R/W	R/W	R/W	R/W	R/W	R/W	R/W	R/W	R/W	R/W	R/W	R/W	R/W
Reset	1	1	1	1	1	1	1	1	1	1	1	1	1	1	1	1

Bit/Field	Name	Type	Reset	Description
31:0	READ_ENABLE	R/W	0xFFFFFFFF	Flash Read Enable Configures 2-KB flash blocks to be read only. The policies may be combined as shown in the table “Flash Protection Policy Combinations”. Value — Description 0xFFFFFFFF — Bits [31:0] each enable protection on a 2-KB block of Flash memory up to the total of 64 KB.

Register 10: Flash Memory Protection Program Enable 0 (FMPPE0), offset 0x134 and 0x400

Note: This register is aliased for backwards compatability.

Note: Offset is relative to System Control base address of 0x400FE000.

This register stores the execute-only protection bits for each 2-KB flash block (**FMPREn** stores the execute-only bits). Flash memory up to a total of 64 KB is controlled by this register. Other **FMPPEn** registers (if any) provide protection for other 64K blocks. This register is loaded during the power-on reset sequence. The factory settings for the **FMPREn** and **FMPPEn** registers are a value of 1 for all implemented banks. This achieves a policy of open access and programmability. The register bits may be changed by writing the specific register bit. However, this register is R/W0; the user can only change the protection bit from a 1 to a 0 (and may NOT change a 0 to a 1). The changes are not permanent until the register is committed (saved), at which point the bit change is permanent. If a bit is changed from a 1 to a 0 and not committed, it may be restored by executing a power-on reset sequence. The reset value shown only applies to power-on reset; any other type of reset does not affect this register. Once committed, the only way to restore the factory default value of this register is to perform the "Recover Locked Device" sequence detailed in the JTAG chapter. For additional information, see the "Flash Memory Protection" section.

Flash Memory Protection Program Enable 0 (FMPPE0)

Base 0x400F.E000
Offset 0x134 and 0x400
Type R/W, reset 0xFFFF.FFFF

	31	30	29	28	27	26	25	24	23	22	21	20	19	18	17	16
	PROG_ENABLE															
Type	R/W	R/W	R/W	R/W	R/W	R/W	R/W	R/W	R/W	R/W	R/W	R/W	R/W	R/W	R/W	R/W
Reset	1	1	1	1	1	1	1	1	1	1	1	1	1	1	1	1

	15	14	13	12	11	10	9	8	7	6	5	4	3	2	1	0
	PROG_ENABLE															
Type	R/W	R/W	R/W	R/W	R/W	R/W	R/W	R/W	R/W	R/W	R/W	R/W	R/W	R/W	R/W	R/W
Reset	1	1	1	1	1	1	1	1	1	1	1	1	1	1	1	1

Bit/Field	Name	Type	Reset	Description
31:0	PROG_ENABLE	R/W	0xFFFFFFFF	Flash Programming Enable Configures 2-KB flash blocks to be execute only. The policies may be combined as shown in the table “Flash Protection Policy Combinations”. Value — Description 0xFFFFFFFF — Bits [31:0] each enable protection on a 2-KB block of Flash memory up to the total of 64 KB.

Register 11: User Debug (USER_DBG), offset 0x1D0

Note: Offset is relative to System Control base address of 0x400FE000.

This register provides a write-once mechanism to disable external debugger access to the device in addition to 27 additional bits of user-defined data. The DBG0 bit (bit 0) is set to 0 from the factory and the DBG1 bit (bit 1) is set to 1, which enables external debuggers. Changing the DBG1 bit to 0 disables any external debugger access to the device permanently, starting with the next power-up cycle of the device. The NW bit (bit 31) indicates that the register has not yet been committed and is controlled through hardware to ensure that the register is only committed once. Prior to being committed, bits can only be changed from 1 to 0. The reset value shown only applies to power-on reset; any other type of reset does not affect this register. Once commited, the value of this register can never be restored to the factory default value.

User Debug (USER_DBG)

Base 0x400F.E000
Offset 0x1D0
Type R/W, reset 0xFFFF.FFFE

	31	30	29	28	27	26	25	24	23	22	21	20	19	18	17	16
	NW	DATA														
Type	R/W	R/W	R/W	R/W	R/W	R/W	R/W	R/W	R/W	R/W	R/W	R/W	R/W	R/W	R/W	R/W
Reset	1	1	1	1	1	1	1	1	1	1	1	1	1	1	1	1

	15	14	13	12	11	10	9	8	7	6	5	4	3	2	1	0
	DATA														DBG1	DBG0
Type	R/W	R/W	R/W	R/W	R/W	R/W	R/W	R/W	R/W	R/W	R/W	R/W	R/W	R/W	R/W	R/W
Reset	1	1	1	1	1	1	1	1	1	1	1	1	1	1	1	0

Bit/Field	Name	Type	Reset	Description
31	NW	R/W	1	User Debug Not Written When set, this bit indicates that this 32-bit register has not been committed. When clear, this bit specifies that this register has been committed and may not be committed again.
30:2	DATA	R/W	0x1FFFFFFF	User Data Contains the user data value. This field is initialized to all 1s and can only be committed once.
1	DBG1	R/W	1	Debug Control 1 The `DBG1` bit must be 1 and `DBG0` must be 0 for debug to be available.
0	DBG0	R/W	0	Debug Control 0 The `DBG1` bit must be 1 and `DBG0` must be 0 for debug to be available.

Register 12: User Register 0 (USER_REG0), offset 0x1E0

Note: Offset is relative to System Control base address of 0x400FE000.

This register provides 31 bits of user-defined data that is non-volatile and can only be written once. Bit 31 indicates that the register is available to be written and is controlled through hardware to ensure that the register is only written once. The write-once characteristics of this register are useful for keeping static information like communication addresses that need to be unique per part and would otherwise require an external EEPROM or other non-volatile device. Once commited, the value of this register can never be restored to the factory default value.

User Register 0 (USER_REG0)

Base 0x400F.E000
Offset 0x1E0
Type R/W, reset 0xFFFF.FFFF

	31	30	29	28	27	26	25	24	23	22	21	20	19	18	17	16
	NW	DATA														
Type	R/W	R/W	R/W	R/W	R/W	R/W	R/W	R/W	R/W	R/W	R/W	R/W	R/W	R/W	R/W	R/W
Reset	1	1	1	1	1	1	1	1	1	1	1	1	1	1	1	1

	15	14	13	12	11	10	9	8	7	6	5	4	3	2	1	0
	DATA															
Type	R/W	R/W	R/W	R/W	R/W	R/W	R/W	R/W	R/W	R/W	R/W	R/W	R/W	R/W	R/W	R/W
Reset	1	1	1	1	1	1	1	1	1	1	1	1	1	1	1	1

Bit/Field	Name	Type	Reset	Description
31	NW	R/W	1	Not Written When set, this bit indicates that this 32-bit register has not been committed. When clear, this bit specifies that this register has been committed and may not be committed again.
30:0	DATA	R/W	0x7FFFFFFF	User Data Contains the user data value. This field is initialized to all 1s and can only be committed once.

Register 13: User Register 1 (USER_REG1), offset 0x1E4

Note: Offset is relative to System Control base address of 0x400FE000.

This register provides 31 bits of user-defined data that is non-volatile and can only be written once. Bit 31 indicates that the register is available to be written and is controlled through hardware to ensure that the register is only written once. The write-once characteristics of this register are useful for keeping static information like communication addresses that need to be unique per part and would otherwise require an external EEPROM or other non-volatile device. Once commited, the value of this register can never be restored to the factory default value.

User Register 1 (USER_REG1)

Base 0x400F.E000
Offset 0x1E4
Type R/W, reset 0xFFFF.FFFF

	31	30	29	28	27	26	25	24	23	22	21	20	19	18	17	16
	NW	DATA														
Type	R/W	R/W	R/W	R/W	R/W	R/W	R/W	R/W	R/W	R/W	R/W	R/W	R/W	R/W	R/W	R/W
Reset	1	1	1	1	1	1	1	1	1	1	1	1	1	1	1	1

	15	14	13	12	11	10	9	8	7	6	5	4	3	2	1	0
	DATA															
Type	R/W	R/W	R/W	R/W	R/W	R/W	R/W	R/W	R/W	R/W	R/W	R/W	R/W	R/W	R/W	R/W
Reset	1	1	1	1	1	1	1	1	1	1	1	1	1	1	1	1

Bit/Field	Name	Type	Reset	Description
31	NW	R/W	1	Not Written When set, this bit indicates that this 32-bit register has not been committed. When clear, this bit specifies that this register has been committed and may not be committed again.
30:0	DATA	R/W	0x7FFFFFFF	User Data Contains the user data value. This field is initialized to all 1s and can only be committed once.

Register 14: User Register 2 (USER_REG2), offset 0x1E8

Note: Offset is relative to System Control base address of 0x400FE000.

This register provides 31 bits of user-defined data that is non-volatile and can only be written once. Bit 31 indicates that the register is available to be written and is controlled through hardware to ensure that the register is only written once. The write-once characteristics of this register are useful for keeping static information like communication addresses that need to be unique per part and would otherwise require an external EEPROM or other non-volatile device. Once commited, the value of this register can never be restored to the factory default value.

User Register 2 (USER_REG2)

Base 0x400F.E000
Offset 0x1E8
Type R/W, reset 0xFFFF.FFFF

	31	30	29	28	27	26	25	24	23	22	21	20	19	18	17	16
	NW	DATA														
Type	R/W	R/W	R/W	R/W	R/W	R/W	R/W	R/W	R/W	R/W	R/W	R/W	R/W	R/W	R/W	R/W
Reset	1	1	1	1	1	1	1	1	1	1	1	1	1	1	1	1

	15	14	13	12	11	10	9	8	7	6	5	4	3	2	1	0
	DATA															
Type	R/W	R/W	R/W	R/W	R/W	R/W	R/W	R/W	R/W	R/W	R/W	R/W	R/W	R/W	R/W	R/W
Reset	1	1	1	1	1	1	1	1	1	1	1	1	1	1	1	1

Bit/Field	Name	Type	Reset	Description
31	NW	R/W	1	Not Written When set, this bit indicates that this 32-bit register has not been committed. When clear, this bit specifies that this register has been committed and may not be committed again.
30:0	DATA	R/W	0x7FFFFFFF	User Data Contains the user data value. This field is initialized to all 1s and can only be committed once.

Register 15: User Register 3 (USER_REG3), offset 0x1EC

Note: Offset is relative to System Control base address of 0x400FE000.

This register provides 31 bits of user-defined data that is non-volatile and can only be written once. Bit 31 indicates that the register is available to be written and is controlled through hardware to ensure that the register is only written once. The write-once characteristics of this register are useful for keeping static information like communication addresses that need to be unique per part and would otherwise require an external EEPROM or other non-volatile device. Once commited, the value of this register can never be restored to the factory default value.

User Register 3 (USER_REG3)

Base 0x400F.E000
Offset 0x1EC
Type R/W, reset 0xFFFF.FFFF

	31	30	29	28	27	26	25	24	23	22	21	20	19	18	17	16
	NW	DATA														
Type	R/W	R/W	R/W	R/W	R/W	R/W	R/W	R/W	R/W	R/W	R/W	R/W	R/W	R/W	R/W	R/W
Reset	1	1	1	1	1	1	1	1	1	1	1	1	1	1	1	1

	15	14	13	12	11	10	9	8	7	6	5	4	3	2	1	0
	DATA															
Type	R/W	R/W	R/W	R/W	R/W	R/W	R/W	R/W	R/W	R/W	R/W	R/W	R/W	R/W	R/W	R/W
Reset	1	1	1	1	1	1	1	1	1	1	1	1	1	1	1	1

Bit/Field	Name	Type	Reset	Description
31	NW	R/W	1	Not Written When set, this bit indicates that this 32-bit register has not been committed. When clear, this bit specifies that this register has been committed and may not be committed again.
30:0	DATA	R/W	0x7FFFFFFF	User Data Contains the user data value. This field is initialized to all 1s and can only be committed once.

Register 16: Flash Memory Protection Read Enable 1 (FMPRE1), offset 0x204

Note: Offset is relative to System Control base address of 0x400FE000.

This register stores the read-only protection bits for each 2-KB flash block (**FMPPEn** stores the execute-only bits). Flash memory up to a total of 64 KB is controlled by this register. Other **FMPREn** registers (if any) provide protection for other 64K blocks. This register is loaded during the power-on reset sequence. The factory settings for the **FMPREn** and **FMPPEn** registers are a value of 1 for all implemented banks. This achieves a policy of open access and programmability. The register bits may be changed by writing the specific register bit. However, this register is R/W0; the user can only change the protection bit from a 1 to a 0 (and may NOT change a 0 to a 1). The changes are not permanent until the register is committed (saved), at which point the bit change is permanent. If a bit is changed from a 1 to a 0 and not committed, it may be restored by executing a power-on reset sequence. The reset value shown only applies to power-on reset; any other type of reset does not affect this register. Once committed, the only way to restore the factory default value of this register is to perform the "Recover Locked Device" sequence detailed in the JTAG chapter. If the Flash memory size on the device is less than 64 KB, this register usually reads as zeroes, but software should not rely on these bits to be zero. For additional information, see the "Flash Memory Protection" section.

Flash Memory Protection Read Enable 1 (FMPRE1)

Base 0x400F.E000
Offset 0x204
Type R/W, reset 0xFFFF.FFFF

	31	30	29	28	27	26	25	24	23	22	21	20	19	18	17	16
	READ_ENABLE															
Type	R/W	R/W	R/W	R/W	R/W	R/W	R/W	R/W	R/W	R/W	R/W	R/W	R/W	R/W	R/W	R/W
Reset	1	1	1	1	1	1	1	1	1	1	1	1	1	1	1	1

	15	14	13	12	11	10	9	8	7	6	5	4	3	2	1	0
	READ_ENABLE															
Type	R/W	R/W	R/W	R/W	R/W	R/W	R/W	R/W	R/W	R/W	R/W	R/W	R/W	R/W	R/W	R/W
Reset	1	1	1	1	1	1	1	1	1	1	1	1	1	1	1	1

Bit/Field	Name	Type	Reset	Description
31:0	READ_ENABLE	R/W	0xFFFFFFFF	Flash Read Enable Configures 2-KB flash blocks to be read only. The policies may be combined as shown in the table “Flash Protection Policy Combinations”. Value — Description 0xFFFFFFFF — Bits [31:0] each enable protection on a 2-KB block of Flash memory in memory range from 65 to 128 KB.

Register 17: Flash Memory Protection Read Enable 2 (FMPRE2), offset 0x208

Note: Offset is relative to System Control base address of 0x400FE000.

This register stores the read-only protection bits for each 2-KB flash block (**FMPPEn** stores the execute-only bits). Flash memory up to a total of 64 KB is controlled by this register. Other **FMPREn** registers (if any) provide protection for other 64K blocks. This register is loaded during the power-on reset sequence. The factory settings for the **FMPREn** and **FMPPEn** registers are a value of 1 for all implemented banks. This achieves a policy of open access and programmability. The register bits may be changed by writing the specific register bit. However, this register is R/W0; the user can only change the protection bit from a 1 to a 0 (and may NOT change a 0 to a 1). The changes are not permanent until the register is committed (saved), at which point the bit change is permanent. If a bit is changed from a 1 to a 0 and not committed, it may be restored by executing a power-on reset sequence. The reset value shown only applies to power-on reset; any other type of reset does not affect this register. Once committed, the only way to restore the factory default value of this register is to perform the "Recover Locked Device" sequence detailed in the JTAG chapter. If the Flash memory size on the device is less than 128 KB, this register usually reads as zeroes, but software should not rely on these bits to be zero. For additional information, see the "Flash Memory Protection" section.

Flash Memory Protection Read Enable 2 (FMPRE2)

Base 0x400F.E000
Offset 0x208
Type R/W, reset 0x0000.0000

	31	30	29	28	27	26	25	24	23	22	21	20	19	18	17	16
	READ_ENABLE															
Type	R/W	R/W	R/W	R/W	R/W	R/W	R/W	R/W	R/W	R/W	R/W	R/W	R/W	R/W	R/W	R/W
Reset	0	0	0	0	0	0	0	0	0	0	0	0	0	0	0	0

	15	14	13	12	11	10	9	8	7	6	5	4	3	2	1	0
	READ_ENABLE															
Type	R/W	R/W	R/W	R/W	R/W	R/W	R/W	R/W	R/W	R/W	R/W	R/W	R/W	R/W	R/W	R/W
Reset	0	0	0	0	0	0	0	0	0	0	0	0	0	0	0	0

Bit/Field	Name	Type	Reset	Description
31:0	READ_ENABLE	R/W	0x00000000	Flash Read Enable Configures 2-KB flash blocks to be read only. The policies may be combined as shown in the table “Flash Protection Policy Combinations”. Value — Description 0x00000000 — Bits [31:0] each enable protection on a 2-KB block of Flash memory in the range from 129 to 192 KB.

Register 18: Flash Memory Protection Read Enable 3 (FMPRE3), offset 0x20C

Note: Offset is relative to System Control base address of 0x400FE000.

This register stores the read-only protection bits for each 2-KB flash block (**FMPPEn** stores the execute-only bits). Flash memory up to a total of 64 KB is controlled by this register. Other **FMPREn** registers (if any) provide protection for other 64K blocks. This register is loaded during the power-on reset sequence. The factory settings for the **FMPREn** and **FMPPEn** registers are a value of 1 for all implemented banks. This achieves a policy of open access and programmability. The register bits may be changed by writing the specific register bit. However, this register is R/W0; the user can only change the protection bit from a 1 to a 0 (and may NOT change a 0 to a 1). The changes are not permanent until the register is committed (saved), at which point the bit change is permanent. If a bit is changed from a 1 to a 0 and not committed, it may be restored by executing a power-on reset sequence. The reset value shown only applies to power-on reset; any other type of reset does not affect this register. Once committed, the only way to restore the factory default value of this register is to perform the "Recover Locked Device" sequence detailed in the JTAG chapter. If the Flash memory size on the device is less than 192 KB, this register usually reads as zeroes, but software should not rely on these bits to be zero. For additional information, see the "Flash Memory Protection" section.

Flash Memory Protection Read Enable 3 (FMPRE3)

Base 0x400F.E000
Offset 0x20C
Type R/W, reset 0x0000.0000

	31	30	29	28	27	26	25	24	23	22	21	20	19	18	17	16
	READ_ENABLE															
Type	R/W	R/W	R/W	R/W	R/W	R/W	R/W	R/W	R/W	R/W	R/W	R/W	R/W	R/W	R/W	R/W
Reset	0	0	0	0	0	0	0	0	0	0	0	0	0	0	0	0

	15	14	13	12	11	10	9	8	7	6	5	4	3	2	1	0
	READ_ENABLE															
Type	R/W	R/W	R/W	R/W	R/W	R/W	R/W	R/W	R/W	R/W	R/W	R/W	R/W	R/W	R/W	R/W
Reset	0	0	0	0	0	0	0	0	0	0	0	0	0	0	0	0

Bit/Field	Name	Type	Reset	Description
31:0	READ_ENABLE	R/W	0x00000000	Flash Read Enable Configures 2-KB flash blocks to be read only. The policies may be combined as shown in the table “Flash Protection Policy Combinations”. Value — Description 0x00000000 — Bits [31:0] each enable protection on a 2-KB block of Flash memory in the range from 193 to 256 KB.

Register 19: Flash Memory Protection Program Enable 1 (FMPPE1), offset 0x404

Note: Offset is relative to System Control base address of 0x400FE000.

This register stores the execute-only protection bits for each 2-KB flash block (**FMPREn** stores the execute-only bits). Flash memory up to a total of 64 KB is controlled by this register. Other **FMPPEn** registers (if any) provide protection for other 64K blocks. This register is loaded during the power-on reset sequence. The factory settings for the **FMPREn** and **FMPPEn** registers are a value of 1 for all implemented banks. This achieves a policy of open access and programmability. The register bits may be changed by writing the specific register bit. However, this register is R/W0; the user can only change the protection bit from a 1 to a 0 (and may NOT change a 0 to a 1). The changes are not permanent until the register is committed (saved), at which point the bit change is permanent. If a bit is changed from a 1 to a 0 and not committed, it may be restored by executing a power-on reset sequence. The reset value shown only applies to power-on reset; any other type of reset does not affect this register. Once committed, the only way to restore the factory default value of this register is to perform the "Recover Locked Device" sequence detailed in the JTAG chapter. If the Flash memory size on the device is less than 64 KB, this register usually reads as zeroes, but software should not rely on these bits to be zero. For additional information, see the "Flash Memory Protection" section.

Flash Memory Protection Program Enable 1 (FMPPE1)

Base 0x400F.E000
Offset 0x404
Type R/W, reset 0xFFFF.FFFF

	31	30	29	28	27	26	25	24	23	22	21	20	19	18	17	16
	PROG_ENABLE															
Type	R/W	R/W	R/W	R/W	R/W	R/W	R/W	R/W	R/W	R/W	R/W	R/W	R/W	R/W	R/W	R/W
Reset	1	1	1	1	1	1	1	1	1	1	1	1	1	1	1	1

	15	14	13	12	11	10	9	8	7	6	5	4	3	2	1	0
	PROG_ENABLE															
Type	R/W	R/W	R/W	R/W	R/W	R/W	R/W	R/W	R/W	R/W	R/W	R/W	R/W	R/W	R/W	R/W
Reset	1	1	1	1	1	1	1	1	1	1	1	1	1	1	1	1

Bit/Field	Name	Type	Reset	Description
31:0	PROG_ENABLE	R/W	0xFFFFFFFF	Flash Programming Enable Configures 2-KB flash blocks to be execute only. The policies may be combined as shown in the table “Flash Protection Policy Combinations”. Value — Description 0xFFFFFFFF — Bits [31:0] each enable protection on a 2-KB block of Flash memory in memory range from 65 to 128 KB.

Register 20: Flash Memory Protection Program Enable 2 (FMPPE2), offset 0x408

Note: Offset is relative to System Control base address of 0x400FE000.

This register stores the execute-only protection bits for each 2-KB flash block (**FMPREn** stores the execute-only bits). Flash memory up to a total of 64 KB is controlled by this register. Other **FMPPEn** registers (if any) provide protection for other 64K blocks. This register is loaded during the power-on reset sequence. The factory settings for the **FMPREn** and **FMPPEn** registers are a value of 1 for all implemented banks. This achieves a policy of open access and programmability. The register bits may be changed by writing the specific register bit. However, this register is R/W0; the user can only change the protection bit from a 1 to a 0 (and may NOT change a 0 to a 1). The changes are not permanent until the register is committed (saved), at which point the bit change is permanent. If a bit is changed from a 1 to a 0 and not committed, it may be restored by executing a power-on reset sequence. The reset value shown only applies to power-on reset; any other type of reset does not affect this register. Once committed, the only way to restore the factory default value of this register is to perform the "Recover Locked Device" sequence detailed in the JTAG chapter. If the Flash memory size on the device is less than 128 KB, this register usually reads as zeroes, but software should not rely on these bits to be zero. For additional information, see the "Flash Memory Protection" section.

Flash Memory Protection Program Enable 2 (FMPPE2)

Base 0x400F.E000
Offset 0x408
Type R/W, reset 0x0000.0000

	31	30	29	28	27	26	25	24	23	22	21	20	19	18	17	16
	PROG_ENABLE															
Type	R/W	R/W	R/W	R/W	R/W	R/W	R/W	R/W	R/W	R/W	R/W	R/W	R/W	R/W	R/W	R/W
Reset	0	0	0	0	0	0	0	0	0	0	0	0	0	0	0	0

	15	14	13	12	11	10	9	8	7	6	5	4	3	2	1	0
	PROG_ENABLE															
Type	R/W	R/W	R/W	R/W	R/W	R/W	R/W	R/W	R/W	R/W	R/W	R/W	R/W	R/W	R/W	R/W
Reset	0	0	0	0	0	0	0	0	0	0	0	0	0	0	0	0

Bit/Field	Name	Type	Reset	Description
31:0	PROG_ENABLE	R/W	0x00000000	Flash Programming Enable Configures 2-KB flash blocks to be execute only. The policies may be combined as shown in the table “Flash Protection Policy Combinations”. Value — Description 0x00000000 — Bits [31:0] each enable protection on a 2-KB block of Flash memory in the range from 129 to 192 KB.

Register 21: Flash Memory Protection Program Enable 3 (FMPPE3), offset 0x40C

Note: Offset is relative to System Control base address of 0x400FE000.

This register stores the execute-only protection bits for each 2-KB flash block (**FMPREn** stores the execute-only bits). Flash memory up to a total of 64 KB is controlled by this register. Other **FMPPEn** registers (if any) provide protection for other 64K blocks. This register is loaded during the power-on reset sequence. The factory settings for the **FMPREn** and **FMPPEn** registers are a value of 1 for all implemented banks. This achieves a policy of open access and programmability. The register bits may be changed by writing the specific register bit. However, this register is R/W0; the user can only change the protection bit from a 1 to a 0 (and may NOT change a 0 to a 1). The changes are not permanent until the register is committed (saved), at which point the bit change is permanent. If a bit is changed from a 1 to a 0 and not committed, it may be restored by executing a power-on reset sequence. The reset value shown only applies to power-on reset; any other type of reset does not affect this register. Once committed, the only way to restore the factory default value of this register is to perform the "Recover Locked Device" sequence detailed in the JTAG chapter. If the Flash memory size on the device is less than 192 KB, this register usually reads as zeroes, but software should not rely on these bits to be zero. For additional information, see the "Flash Memory Protection" section.

Flash Memory Protection Program Enable 3 (FMPPE3)

Base 0x400F.E000
Offset 0x40C
Type R/W, reset 0x0000.0000

	31	30	29	28	27	26	25	24	23	22	21	20	19	18	17	16
	PROG_ENABLE															
Type	R/W	R/W	R/W	R/W	R/W	R/W	R/W	R/W	R/W	R/W	R/W	R/W	R/W	R/W	R/W	R/W
Reset	0	0	0	0	0	0	0	0	0	0	0	0	0	0	0	0

	15	14	13	12	11	10	9	8	7	6	5	4	3	2	1	0
	PROG_ENABLE															
Type	R/W	R/W	R/W	R/W	R/W	R/W	R/W	R/W	R/W	R/W	R/W	R/W	R/W	R/W	R/W	R/W
Reset	0	0	0	0	0	0	0	0	0	0	0	0	0	0	0	0

Bit/Field	Name	Type	Reset	Description
31:0	PROG_ENABLE	R/W	0x00000000	Flash Programming Enable Configures 2-KB flash blocks to be execute only. The policies may be combined as shown in the table “Flash Protection Policy Combinations”. Value — Description 0x00000000 — Bits [31:0] each enable protection on a 2-KB block of Flash memory in the range from 193 to 256 KB.

7 Micro Direct Memory Access (µDMA)

The LM3S2678 microcontroller includes a Direct Memory Access (DMA) controller, known as micro-DMA (µDMA). The µDMA controller provides a way to offload data transfer tasks from the Cortex-M3 processor, allowing for more efficient use of the processor and the expanded available bus bandwidth. The µDMA controller can perform transfers between memory and peripherals. It has dedicated channels for each supported peripheral and can be programmed to automatically perform transfers between peripherals and memory as the peripheral is ready to transfer more data. The µDMA controller also supports sophisticated transfer modes such as ping-pong and scatter-gather, which allows the processor to set up a list of transfer tasks for the controller.

The µDMA controller has the following features:

- ARM PrimeCell® 32-channel configurable µDMA controller
- Support for multiple transfer modes
  - Basic, for simple transfer scenarios
  - Ping-pong, for continuous data flow to/from peripherals
  - Scatter-gather, from a programmable list of up to 256 arbitrary transfers initiated from a single request
- Dedicated channels for supported peripherals
- One channel each for receive and transmit path for bidirectional peripherals
- Dedicated channel for software-initiated transfers
- Independently configured and operated channels
- Per-channel configurable bus arbitration scheme
- Two levels of priority
- Design optimizations for improved bus access performance between µDMA controller and the processor core
  - µDMA controller access is subordinate to core access
  - RAM striping
  - Peripheral bus segmentation
- Data sizes of 8, 16, and 32 bits
- Source and destination address increment size of byte, half-word, word, or no increment
- Maskable device requests
- Optional software initiated requests for any channel
- Interrupt on transfer completion, with a separate interrupt per channel

7.1 Block Diagram

Figure 7-1. µDMA Block Diagram

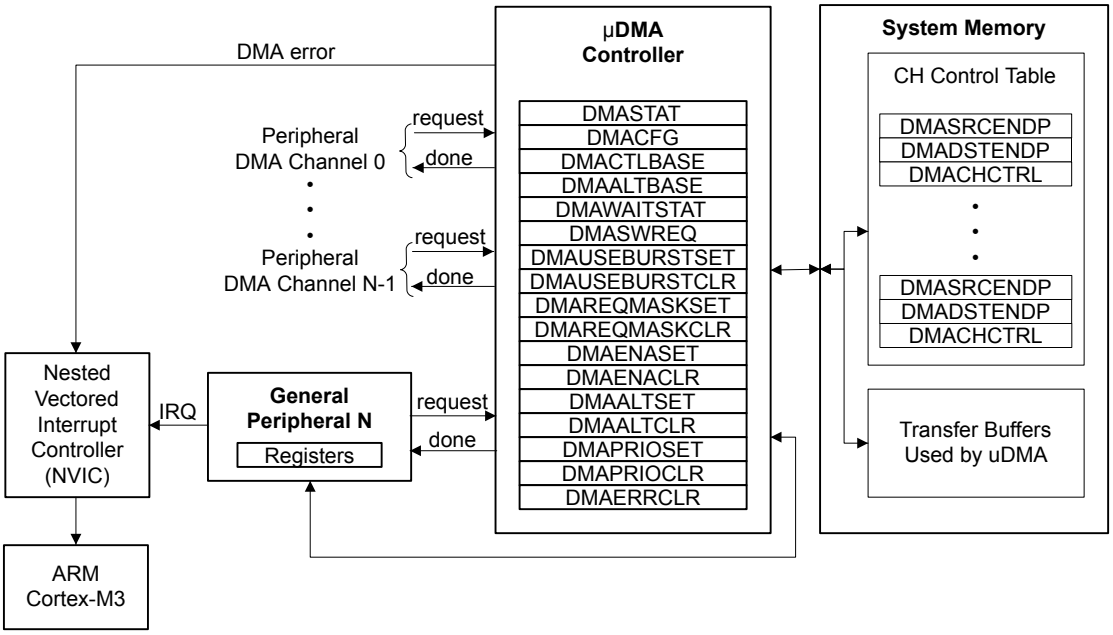

7.2 Functional Description

The µDMA controller is a flexible and highly configurable DMA controller designed to work effeciently with the microcontroller's Cortex-M3 processor core. It supports multiple data sizes and address increment schemes, multiple levels of priority among DMA channels, and several transfer modes to allow for sophisticated programmed data transfers. The DMA controller's usage of the bus is always subordinate to the processor core, and so it will never hold up a bus transaction by the processor. Because the µDMA controller is only using otherwise-idle bus cycles, the data transfer bandwidth it provides is essentially free, with no impact on the rest of the system. The bus architecture has been optimized to greatly reduce contention between the processor core and the µDMA controller, thus improving performance. The optimizations include RAM striping and peripheral bus segmentation, which in many cases allows both the processor core and the µDMA controller to access the bus and perform simultaneous data transfers.

Each peripheral function that is supported has a dedicated channel on the µDMA controller that can be configured independently.

The µDMA controller makes use of a unique configuration method by using channel control structures that are maintained in system memory by the processor. While simple transfer modes are supported, it is also possible to build up sophisticated "task" lists in memory that allow the controller to perform arbitrary-sized transfers to and from arbitrary locations as part of a single transfer request. The controller also supports the use of ping-pong buffering to accomodate constant streaming of data to or from a peripheral.

Each channel also has a configurable arbitration size. The arbitration size is the number of items that will be transferred in a burst before the controller rearbitrates for channel priority. Using the arbitration size, it is possible to control exactly how many items are transferred to or from a peripheral each time it makes a DMA service request.

7.2.1 Channel Assigments

µDMA channels 0-31 are assigned to peripherals according to the following table.

Note: Channels that are not listed in the table may be assigned to peripherals in the future. However, they are currently available for software use.

Table 7-1. DMA Channel Assignments

DMA Channel	Peripheral Assigned
8	UART0 Receive
9	UART0 Transmit
10	SSI0 Receive
11	SSI0 Transmit
30	Dedicated for software use

7.2.2 Priority

The µDMA controller assigns priority to each channel based on the channel number and the priority level bit for the channel. Channel number 0 has the highest priority and as the channel number increases, the priority of a channel decreases. Each channel has a priority level bit to provide two levels of priority: default priority and high priority. If the priority level bit is set, then that channel has higher priority than all other channels at default priority. If multiple channels are set for high priority, then the channel number is used to determine relative priority among all the high priority channels.

The priority bit for a channel can be set using the **DMA Channel Priority Set (DMAPRIOSET)** register, and cleared with the **DMA Channel Priority Clear (DMAPRIOCLR)** register.

7.2.3 Arbitration Size

When a µDMA channel requests a transfer, the µDMA controller arbitrates between all the channels making a request and services the DMA channel with the highest priority. Once a transfer begins, it continues for a selectable number of transfers before rearbitrating among the requesting channels again. The arbitration size can be configured for each channel, ranging from 1 to 1024 item transfers. After the µDMA controller transfers the number of items specified by the arbitration size, it then checks among all the channels making a request and services the channel with the highest priority.

If a lower priority DMA channel uses a large arbitration size, the latency for higher priority channels will be increased because the µDMA controller will complete the lower priority burst before checking for higher priority requests. Therefore, lower priority channels should not use a large arbitration size for best response on high priority channels.

The arbitration size can also be thought of as a burst size. It is the maximum number of items that will be transferred at any one time in a burst. Here, the term arbitration refers to determination of DMA channel priority, not arbitration for the bus. When the µDMA controller arbitrates for the bus, the processor always takes priority. Furthermore, the µDMA controller will be held off whenever the processor needs to perform a bus transaction on the same bus, even in the middle of a burst transfer.

7.2.4 Request Types

The µDMA controller responds to two types of requests from a peripheral: single or burst. Each peripheral may support either or both types of requests. A single request means that the peripheral is ready to transfer one item, while a burst request means that the peripheral is ready to transfer multiple items.

The µDMA controller responds differently depending on whether the peripheral is making a single request or a burst request. If both are asserted and the µDMA channel has been set up for a burst transfer, then the burst request takes precedence. See Table 7-2 on page 266, which shows how each peripheral supports the two request types.

Table 7-2. Request Type Support

Peripheral	Single Request Signal	Burst Request Signal
UART TX	TX FIFO Not Full	TX FIFO Level (configurable)
UART RX	RX FIFO Not Empty	RX FIFO Level (configurable)
SSI TX	TX FIFO Not Full	TX FIFO Level (fixed at 4)
SSI RX	RX FIFO Not Empty	RX FIFO Level (fixed at 4)

7.2.4.1 Single Request

When a single request is detected, and not a burst request, the µDMA controller will transfer one item, and then stop and wait for another request.

7.2.4.2 Burst Request

When a burst request is detected, the µDMA controller will transfer the number of items that is the lesser of the arbitration size or the number of items remaining in the transfer. Therefore, the arbitration size should be the same as the number of data items that the peripheral can accomodate when making a burst request. For example, the UART will generate a burst request based on the FIFO trigger level. In this case, the arbitration size should be set to the amount of data that the FIFO can transfer when the trigger level is reached.

It may be desirable to use only burst transfers and not allow single transfers. For example, perhaps the nature of the data is such that it only makes sense when transferred together as a single unit rather than one piece at a time. The single request can be disabled by using the **DMA Channel Useburst Set (DMAUSEBURSTSET)** register. By setting the bit for a channel in this register, the µDMA controller will only respond to burst requests for that channel.

7.2.5 Channel Configuration

The µDMA controller uses an area of system memory to store a set of channel control structures in a table. The control table may have one or two entries for each DMA channel. Each entry in the table structure contains source and destination pointers, transfer size, and transfer mode. The control table can be located anywhere in system memory, but it must be contiguous and aligned on a 1024-byte boundary.

Table 7-3 on page 267 shows the layout in memory of the channel control table. Each channel may have one or two control structures in the contol table: a primary control structure and an optional alternate control structure. The table is organized so that all of the primary entries are in the first half of the table and all the alternate structures are in the second half of the table. The primary entry is used for simple transfer modes where transfers can be reconfigured and restarted after each transfer is complete. In this case, the alternate control structures are not used and therefore only the first half of the table needs to be allocated in memory. The second half of the control table is not needed and that memory can be used for something else. If a more complex transfer mode is used such as ping-pong or scatter-gather, then the alternate control structure is also used and memory space should be allocated for the entire table.

Any unused memory in the control table may be used by the application. This includes the control structures for any channels that are unused by the application as well as the unused control word for each channel.

Table 7-3. Control Structure Memory Map

Offset	Channel
0x0	0, Primary
0x10	1, Primary
...	...
0x1F0	31, Primary
0x200	0, Alternate
0x210	1, Alternate
...	...
0x3F0	31, Alternate

Table 7-4 on page 267 shows an individual control structure entry in the control table. Each entry has a source and destination *end* pointer. These pointers point to the ending address of the transfer and are inclusive. If the source or destination is non-incrementing (as for a peripheral register), then the pointer should point to the transfer address.

Table 7-4. Channel Control Structure

Offset	Description
0x000	Source End Pointer
0x004	Destination End Pointer
0x008	Control Word
0x00C	Unused

The remaining part of the control structure is the control word. The control word contains the following fields:

- Source and destination data sizes
- Source and destination address increment size
- Number of transfers before bus arbitration
- Total number of items to transfer
- Useburst flag
- Transfer mode

The control word and each field are described in detail in “µDMA Channel Control Structure” on page 284. The µDMA controller updates the transfer size and transfer mode fields as the transfer is performed. At the end of a transfer, the transfer size will indicate 0, and the transfer mode will indicate "stopped". Since the control word is modified by the µDMA controller, it must be reconfigured before each new transfer. The source and destination end pointers are not modified so they can be left unchanged if the source or destination addresses remain the same.

Prior to starting a transfer, a µDMA channel must be enabled by setting the appropriate bit in the **DMA Channel Enable Set ((DMAENASET)** register. A channel can be disabled by setting the channel bit in the **DMA Channel Enable Clear (DMAENACLR)** register. At the end of a complete DMA transfer, the controller will automatically disable the channel.

7.2.6 Transfer Modes

The µDMA controller supports several transfer modes. Two of the modes support simple one-time transfers. There are several complex modes that are meant to support a continuous flow of data.

7.2.6.1 Stop Mode

While Stop is not actually a transfer mode, it is a valid value for the mode field of the control word. When the mode field has this value, the µDMA controller will not perform a transfer and will disable the channel if it is enabled. At the end of a transfer, the µDMA controller will update the control word to set the mode to Stop.

7.2.6.2 Basic Mode

In Basic mode, the µDMA controller will perform transfers as long as there are more items to transfer and a transfer request is present. This mode is used with peripherals that assert a DMA request signal whenever the peripheral is ready for a data transfer. Basic mode should not be used in any situation where the request is momentary but the entire transfer should be completed. For example, for a software initiated transfer, the request is momentary, and if Basic mode is used then only one item will be transferred on a software request.

When all of the items have been transferred using Basic mode, the µDMA controller will set the mode for that channel to Stop.

7.2.6.3 Auto Mode

Auto mode is similar to Basic mode, except that once a transfer request is received the transfer will run to completion, even if the DMA request is removed. This mode is suitable for software-triggered transfers. Generally, you would not use Auto mode with a peripheral.

When all the items have been transferred using Auto mode, the µDMA controller will set the mode for that channel to Stop.

7.2.6.4 Ping-Pong

Ping-Pong mode is used to support a continuous data flow to or from a peripheral. To use Ping-Pong mode, both the primary and alternate data structures are used. Both are set up by the processor for data transfer between memory and a peripheral. Then the transfer is started using the primary control structure. When the transfer using the primary control structure is complete, the µDMA controller will then read the alternate control structure for that channel to continue the transfer. Each time this happens, an interrupt is generated and the processor can reload the control structure for the just-completed transfer. Data flow can continue indefinitely this way, using the primary and alternate control structures to switch back and forth between buffers as the data flows to or from the peripheral.

Refer to Figure 7-2 on page 269 for an example showing operation in Ping-Pong mode.

Figure 7-2. Example of Ping-Pong DMA Transaction

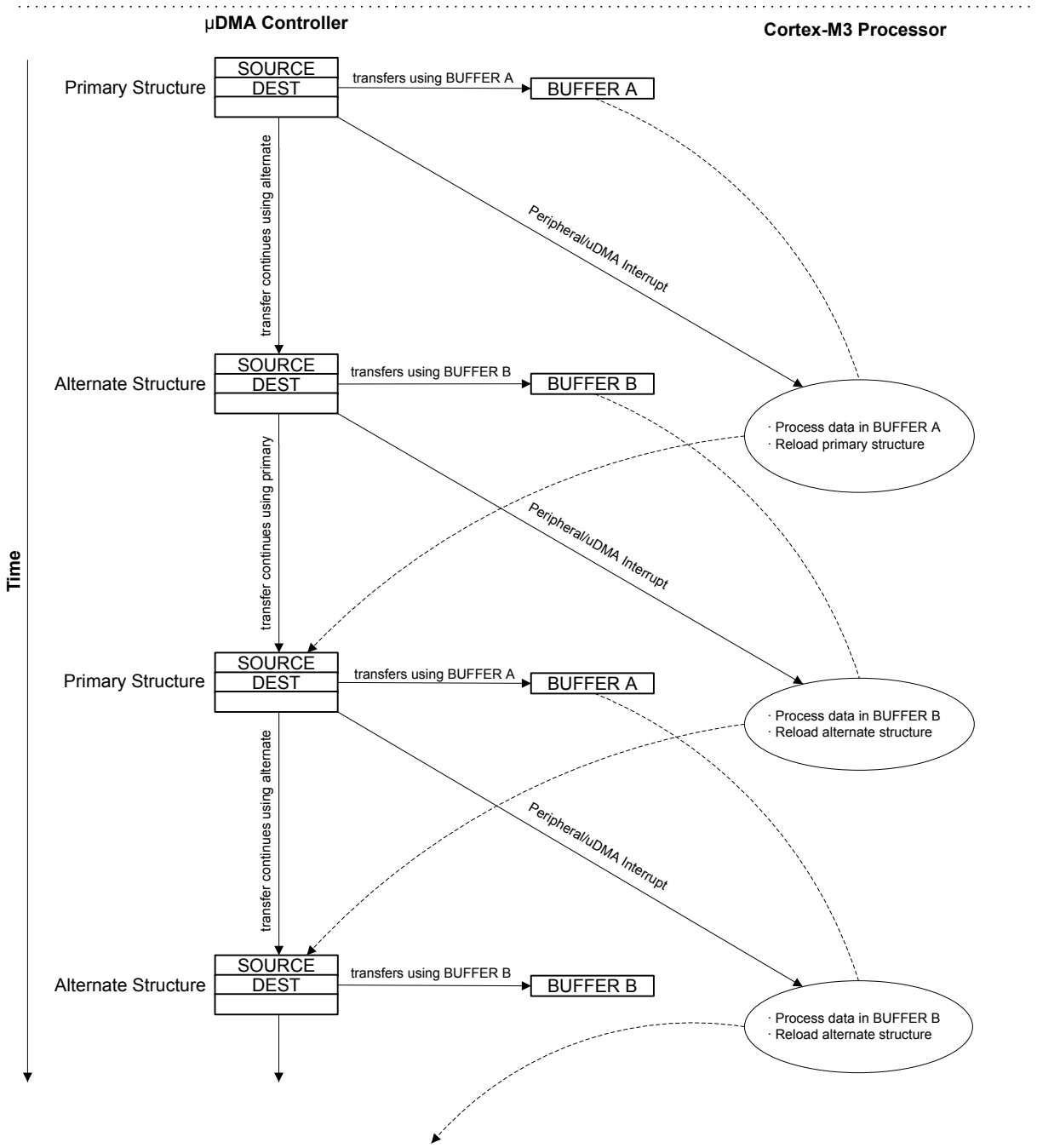

7.2.6.5 Memory Scatter-Gather

Memory Scatter-Gather mode is a complex mode used when data needs to be transferred to or from varied locations in memory instead of a set of contiguous locations in a memory buffer. For example, a gather DMA operation could be used to selectively read the payload of several stored packets of a communication protocol, and store them together in sequence in a memory buffer.

In Memory Scatter-Gather mode, the primary control structure is used to program the alternate control structure from a table in memory. The table is set up by the processor software and contains a list of control structures, each containing the source and destination end pointers, and the control word for a specific transfer. The mode of each control word must be set to Scatter-Gather mode. Each entry in the table is copied in turn to the alternate structure where it is then executed. The µDMA controller alternates between using the primary control structure to copy the next transfer instruction from the list, and then executing the new transfer instruction. The end of the list is marked by setting the control word for the last entry to use Basic transfer mode. Once the last transfer is performed using Basic mode, the µDMA controller will stop. A completion interrupt will only be generated after the last transfer. It is possible to loop the list by having the last entry copy the primary control structure to point back to the beginning of the list (or to a new list). It is also possible to trigger a set of other channels to perform a transfer, either directly by programming a write to the software trigger for another channel, or indirectly by causing a peripheral action that will result in a µDMA request.

By programming the µDMA controller using this method, a set of up to 256 arbitrary transfers can be performed based on a single DMA request.

Refer to Figure 7-3 on page 271 and Figure 7-4 on page 272, which show an example of operation in Memory Scatter-Gather mode. This example shows a *gather* operation, where data in three separate buffers in memory will be copied together into one buffer. Figure 7-3 on page 271 shows how the application sets up a µDMA *task list* in memory that is used by the controller to perform three sets of copy operations from different locations in memory. The primary control structure for the channel that will be used for the operation is configured to copy from the task list to the alternate control structure.

Figure 7-4 on page 272 shows the sequence as the µDMA controller peforms the three sets of copy operations. First, using the primary control structure, the µDMA controller loads the alternate control structure with task A. It then peforms the copy operation specified by task A, copying the data from the source buffer A to the destination buffer. Next, the µDMA controller again uses the primary control structure to load task B into the alternate control structure, and then performs the B operation with the alternate control structure. The process is repeated for task C.

Figure 7-3. Memory Scatter-Gather, Setup and Configuration

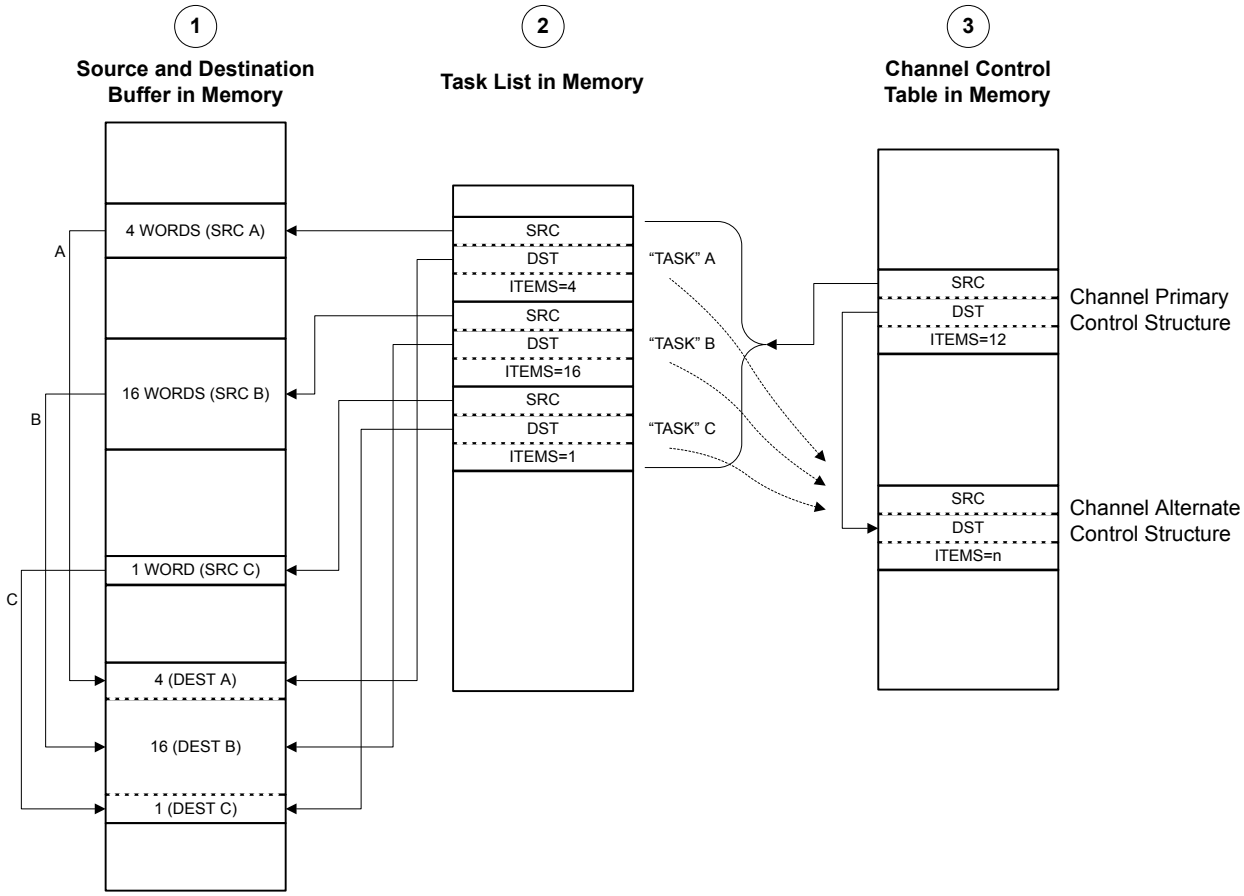

NOTES:
1. Application has a need to copy data items from three separate location in memory into one combined buffer.
2. Application sets up uDMA "task list" in memory, which contains the pointers and control configuration for three uDMA copy "tasks."
3. Application sets up the channel primary control structure to copy each task configuration, one at a time, to the alternate control structure, where it will be executed by the uDMA controller.

Figure 7-4. Memory Scatter-Gather, µDMA Copy Sequence

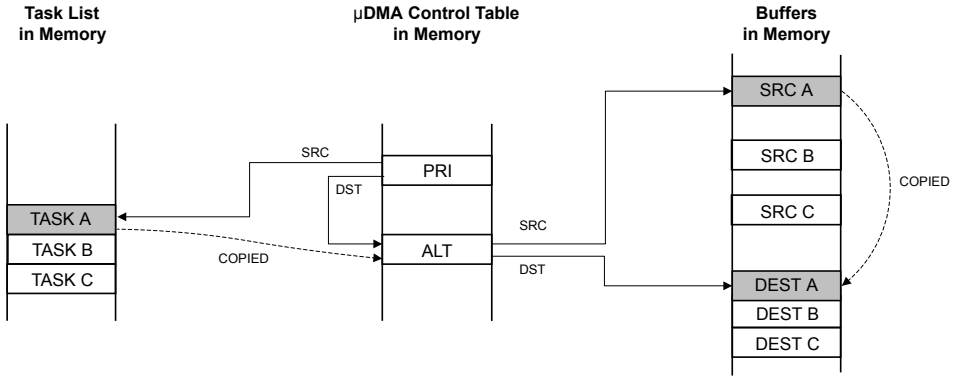

Using the channel's primary control structure, the µDMA controller copies task A configuration to the channel's alternate control structure.

Then, using the channel's alternate control structure, the µDMA controller copies data from the source buffer A to the destination buffer.

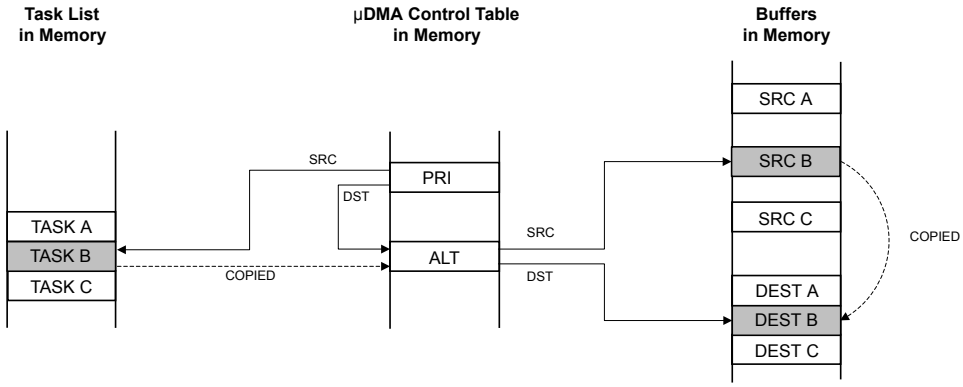

Using the channel's primary control structure, the µDMA controller copies task B configuration to the channel's alternate control structure.

Then, using the channel's alternate control structure, the µDMA controller copies data from the source buffer B to the destination buffer.

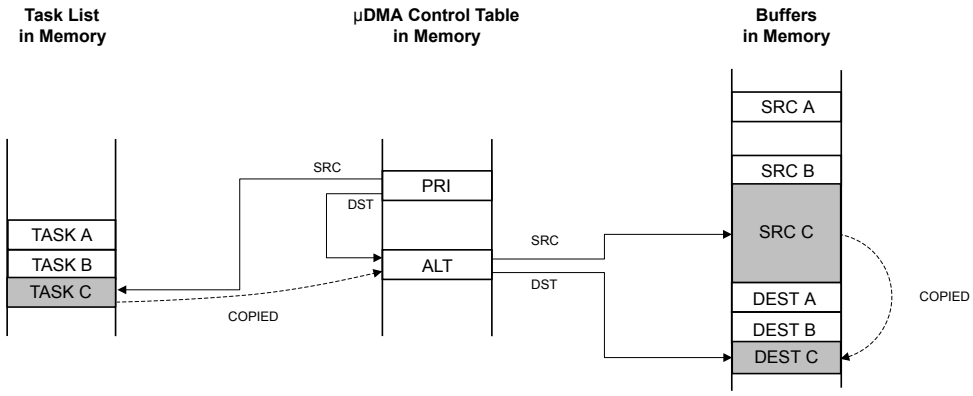

Using the channel's primary control structure, the µDMA controller copies task C configuration to the channel's alternate control structure.

Then, using the channel's alternate control structure, the µDMA controller copies data from the source buffer C to the destination buffer.

7.2.6.6 Peripheral Scatter-Gather

Peripheral Scatter-Gather mode is very similar to Memory Scatter-Gather, except that the transfers are controlled by a peripheral making a DMA request. Upon detecting a DMA request from the peripheral, the µDMA controller will use the primary control structure to copy one entry from the list to the alternate control structure, and then perform the transfer. At the end of this transfer, the next transfer will only be started if the peripheral again asserts a DMA request. The µDMA controller will continue to perform transfers from the list only when the peripheral is making a request, until the last transfer is complete. A completion interrupt will only be generated after the last transfer.

By programming the µDMA controller using this method, data can be transferred to or from a peripheral from a set of arbitrary locations whenever the peripheral is ready to transfer data.

Refer to Figure 7-5 on page 274 and Figure 7-6 on page 275, which show an example of operation in Peripheral Scatter-Gather mode. This example shows a gather operation, where data from three separate buffers in memory will be copied to a single peripheral data register. Figure 7-5 on page 274 shows how the application sets up a µDMA task list in memory that is used by the controller to perform three sets of copy operations from different locations in memory. The primary control structure for the channel that will be used for the operation is configured to copy from the task list to the alternate control structure.

Figure 7-6 on page 275 shows the sequence as the µDMA controller peforms the three sets of copy operations. First, using the primary control structure, the µDMA controller loads the alternate control structure with task A. It then peforms the copy operation specified by task A, copying the data from the source buffer A to the peripheral data register. Next, the µDMA controller again uses the primary control structure to load task B into the alternate control structure, and then performs the B operation with the alternate control structure. The process is repeated for task C.

Figure 7-5. Peripheral Scatter-Gather, Setup and Configuration

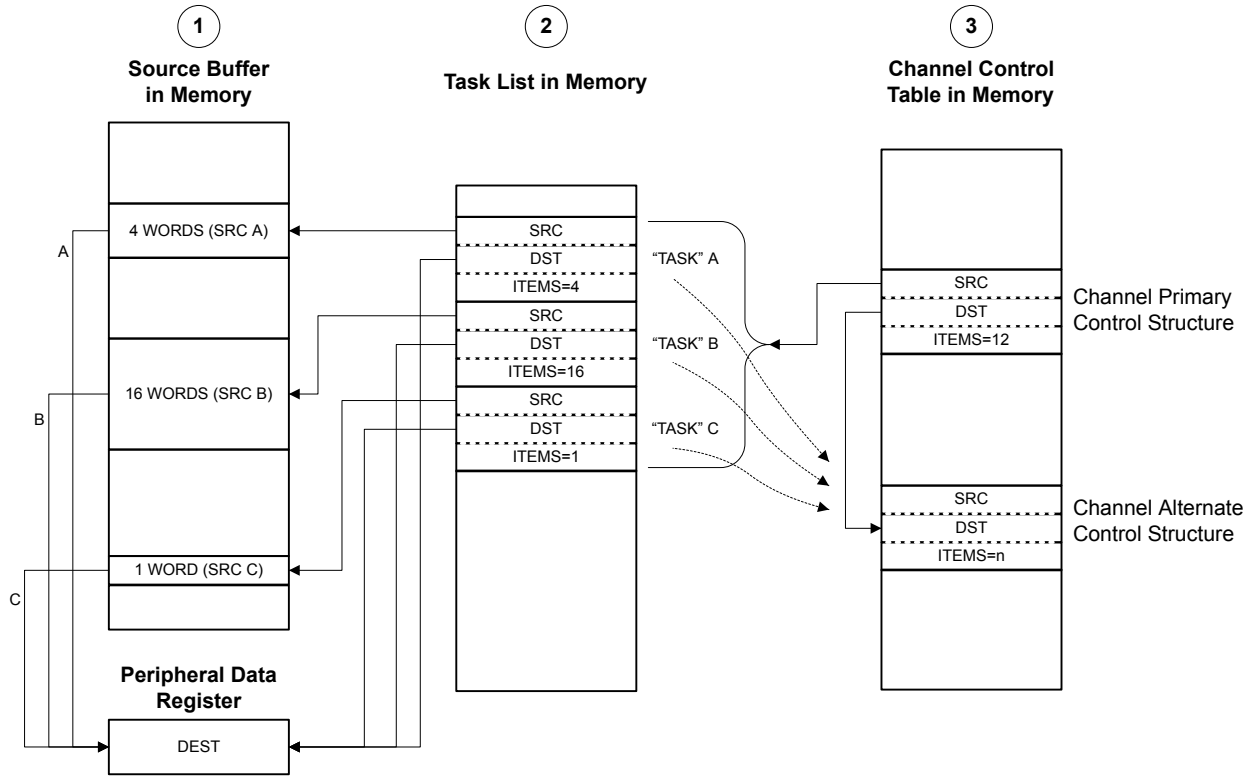

NOTES:
1. Application has a need to copy data items from three separate location in memory into a peripheral data register.
2. Application sets up µDMA "task list" in memory, which contains the pointers and control configuration for three uDMA copy "tasks."
3. Application sets up the channel primary control structure to copy each task configuration, one at a time, to the alternate control structure, where it will be executed by the µDMA controller.

Figure 7-6. Peripheral Scatter-Gather, µDMA Copy Sequence

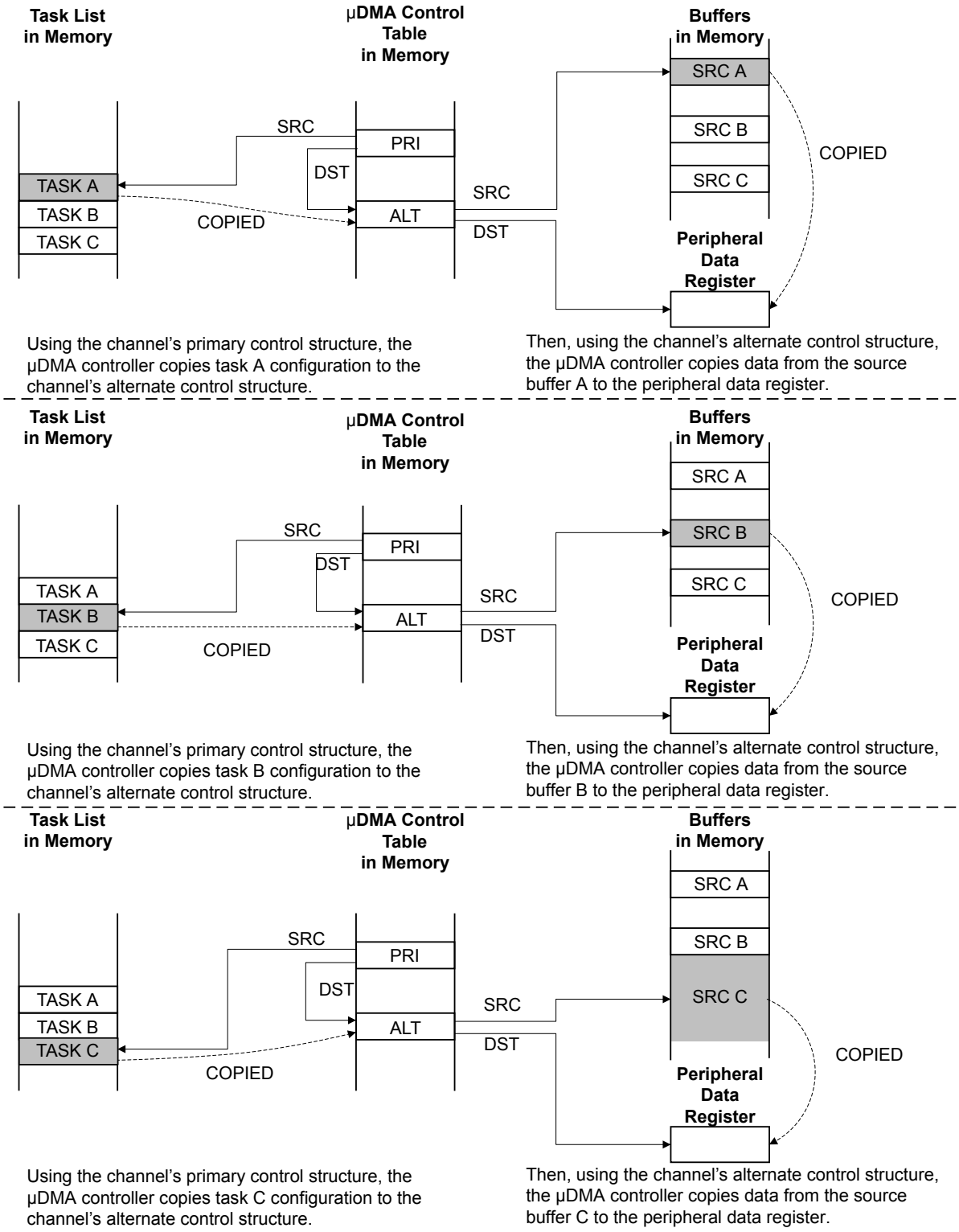

7.2.7 Transfer Size and Increment

The µDMA controller supports transfer data sizes of 8, 16, or 32 bits. The source and destination data size must be the same for any given transfer. The source and destination address can be auto-incremented by bytes, half-words, or words, or can be set to no increment. The source and destination address increment values can be set independently, and it is not necessary for the address increment to match the data size as long as the increment is the same or larger than the data size. For example, it is possible to perform a transfer using 8-bit data size, but using an address increment of full words (4 bytes). The data to be transferred must be aligned in memory according to the data size (8, 16, or 32 bits).

Table 7-5 on page 276 shows the configuration to read from a peripheral that supplies 8-bit data.

Table 7-5. µDMA Read Example: 8-Bit Peripheral

Field	Configuration
Source data size	8 bits
Destination data size	8 bits
Source address increment	No increment
Destination address increment	Byte
Source end pointer	Peripheral read FIFO register
Destination end pointer	End of the data buffer in memory

7.2.8 Peripheral Interface

Each peripheral that supports µDMA has a DMA single request and/or burst request signal that is asserted when the device is ready to transfer data. The request signal can be disabled or enabled by using the **DMA Channel Request Mask Set (DMAREQMASKSET)** and **DMA Channel Request Mask Clear (DMAREQMASKCLR)** registers. The DMA request signal is disabled, or masked, when the channel request mask bit is set. When the request is not masked, the DMA channel is configured correctly and enabled, and the peripheral asserts the DMA request signal, the µDMA controller will begin the transfer.

When a DMA transfer is complete, the µDMA controller asserts a DMA Done signal, which is routed through the interrupt vector of the peripheral. Therefore, if DMA is used to transfer data for a peripheral and interrupts are used, then the interrupt handler for that peripheral must be designed to handle the µDMA transfer completion interrupt. When DMA is enabled for a peripheral, the µDMA controller will mask the normal interrupts for a peripheral. This means that when a large amount of data is transferred using DMA, instead of receiving multiple interrupts from the peripheral as data flows, the processor will only receive one interrupt when the transfer is complete.

The interrupt request from the µDMA controller is automatically cleared when the interrupt handler is activated.

7.2.9 Software Request

There is a dedicated µDMA channel for software-initiated transfers. This channel also has a dedicated interrupt to signal completion of a DMA transfer. A transfer is initiated by software by first configuring and enabling the transfer, and then issuing a software request using the **DMA Channel Software Request (DMASWREQ)** register. For software-based transfers, the Auto transfer mode should be used.

It is possible to initiate a transfer on any channel using the **DMASWREQ** register. If a request is initiated by software using a peripheral DMA channel, then the completion interrupt will occur on the interrupt vector for the peripheral instead of the software interrupt vector. This means that any

channel may be used for software requests as long as the corresponding peripheral is not using µDMA.

7.2.10 Interrupts and Errors

When a DMA transfer is complete, the µDMA controller will generate a completion interrupt on the interrupt vector of the peripheral. If the transfer uses the software DMA channel, then the completion interrupt will occur on the dedicated software DMA interrupt vector.

If the µDMA controller encounters a bus or memory protection error as it attempts to perform a data transfer, it will disable the DMA channel that caused the error, and generate an interrupt on the µDMA Error interrupt vector. The processor can read the **DMA Bus Error Clear (DMAERRCLR)** register to determine if an error is pending. The `ERRCLR` bit will be set if an error occurred. The error can be cleared by writing a 1 to the `ERRCLR` bit.

If the peripheral generates an error that causes an interrupt, the interrupt will be generated on the interrupt vector for that peripheral. This is the same whether or not µDMA is being used with the peripheral.

Table 7-6 on page 277 shows the dedicated interrupt assignments for the µDMA controller.

Table 7-6. µDMA Interrupt Assignments

Interrupt	Assignment
46	µDMA Software Channel Transfer
47	µDMA Error

7.3 Initialization and Configuration

7.3.1 Module Initialization

Before the µDMA controller can be used, it must be enabled in the System Control block and in the peripheral. The location of the channel control structure must also be programmed.

The following steps should be performed one time during system initialization:

1. The µDMA peripheral must be enabled in the System Control block. To do this, set the `UDMA` bit of the System Control **RCGC2** register.
2. Enable the µDMA controller by setting the `MASTEREN` bit of the **DMA Configuration (DMACFG)** register.
3. Program the location of the channel control table by writing the base address of the table to the **DMA Channel Control Base Pointer (DMACTLBASE)** register. The base address must be aligned on a 1024-byte boundary.

7.3.2 Configuring a Memory-to-Memory Transfer

µDMA channel 30 is dedicated for software-initiated transfers. However, any channel can be used for software-initiated, memory-to-memory transfer if the associated peripheral is not being used.

7.3.2.1 Configure the Channel Attributes

First, configure the channel attributes:

1. Set bit 30 of the **DMA Channel Priority Set (DMAPRIOSET)** or **DMA Channel Priority Clear (DMAPRIOCLR)** registers to set the channel to High priority or Default priority.

2. Set bit 30 of the **DMA Channel Primary Alternate Clear (DMAALTCLR)** register to select the primary channel control structure for this transfer.
3. Set bit 30 of the **DMA Channel Useburst Clear (DMAUSEBURSTCLR)** register to allow the µDMA controller to respond to single and burst requests.
4. Set bit 30 of the **DMA Channel Request Mask Clear (DMAREQMASKCLR)** register to allow the µDMA controller to recognize requests for this channel.

7.3.2.2 Configure the Channel Control Structure

Now the channel control structure must be configured.

This example will transfer 256 32-bit words from one memory buffer to another. Channel 30 is used for a software transfer, and the control structure for channel 30 is at offset 0x1E0 of the channel control table. The channel control structure for channel 30 is located at the offsets shown in Table 7-7 on page 278.

Table 7-7. Channel Control Structure Offsets for Channel 30

Offset	Description
Control Table Base + 0x1E0	Channel 30 Source End Pointer
Control Table Base + 0x1E4	Channel 30 Destination End Pointer
Control Table Base + 0x1E8	Channel 30 Control Word

Configure the Source and Destination

The source and destination end pointers must be set to the last address for the transfer (inclusive).

1. Set the source end pointer at offset 0x1E0 to the address of the source buffer + 0x3FC.
2. Set the destination end pointer at offset 0x1E4 to the address of the destination buffer + 0x3FC.

The control word at offset 0x1E8 must be programmed according to Table 7-8 on page 278.

Table 7-8. Channel Control Word Configuration for Memory Transfer Example

Field in DMACHCTL	Bits	Value	Description
DSTINC	31:30	2	32-bit destination address increment
DSTSIZE	29:28	2	32-bit destination data size
SRCINC	27:26	2	32-bit source address increment
SRCSIZE	25:24	2	32-bit source data size
reserved	23:18	0	Reserved
ARBSIZE	17:14	3	Arbitrates after 8 transfers
XFERSIZE	13:4	255	Transfer 256 items
NXTUSEBURST	3	0	N/A for this transfer type
XFERMODE	2:0	2	Use Auto-request transfer mode

7.3.2.3 Start the Transfer

Now the channel is configured and is ready to start.

1. Enable the channel by setting bit 30 of the **DMA Channel Enable Set (DMAENASET)** register.

2. Issue a transfer request by setting bit 30 of the **DMA Channel Software Request (DMASWREQ)** register.

The DMA transfer will now take place. If the interrupt is enabled, then the processor will be notified by interrupt when the transfer is complete. If needed, the status can be checked by reading bit 30 of the **DMAENASET** register. This bit will be automatically cleared when the transfer is complete. The status can also be checked by reading the `XFERMODE` field of the channel control word at offset 0x1E8. This field will automatically be set to 0 at the end of the transfer.

7.3.3 Configuring a Peripheral for Simple Transmit

This example will set up the µDMA controller to transmit a buffer of data to a peripheral. The peripheral has a transmit FIFO with a trigger level of 4. The example peripheral will use µDMA channel 7.

7.3.3.1 Configure the Channel Attributes

First, configure the channel attributes:

1. Set bit 7 of the **DMA Channel Priority Set (DMAPRIOSET)** or **DMA Channel Priority Clear (DMAPRIOCLR)** registers to set the channel to High priority or Default priority.
2. Set bit 7 of the **DMA Channel Primary Alternate Clear (DMAALTCLR)** register to select the primary channel control structure for this transfer.
3. Set bit 7 of the **DMA Channel Useburst Clear (DMAUSEBURSTCLR)** register to allow the µDMA controller to respond to single and burst requests.
4. Set bit 7 of the **DMA Channel Request Mask Clear (DMAREQMASKCLR)** register to allow the µDMA controller to recognize requests for this channel.

7.3.3.2 Configure the Channel Control Structure

Now the channel control structure must be configured. This example will transfer 64 8-bit bytes from a memory buffer to the peripheral's transmit FIFO register. This example uses µDMA channel 7, and the control structure for channel 7 is at offset 0x070 of the channel control table. The channel control structure for channel 7 is located at the offsets shown in Table 7-9 on page 279.

Table 7-9. Channel Control Structure Offsets for Channel 7

Offset	Description
Control Table Base + 0x070	Channel 7 Source End Pointer
Control Table Base + 0x074	Channel 7 Destination End Pointer
Control Table Base + 0x078	Channel 7 Control Word

Configure the Source and Destination

The source and destination end pointers must be set to the last address for the transfer (inclusive). Since the peripheral pointer does not change, it simply points to the peripheral's data register.

1. Set the source end pointer at offset 0x070 to the address of the source buffer + 0x3F.
2. Set the destination end pointer at offset 0x074 to the address of the peripheral's transmit FIFO register.

The control word at offset 0x078 must be programmed according to Table 7-10 on page 280.

Table 7-10. Channel Control Word Configuration for Peripheral Transmit Example

Field in DMACHCTL	Bits	Value	Description
DSTINC	31:30	3	Destination address does not increment
DSTSIZE	29:28	0	8-bit destination data size
SRCINC	27:26	0	8-bit source address increment
SRCSIZE	25:24	0	8-bit source data size
reserved	23:18	0	Reserved
ARBSIZE	17:14	2	Arbitrates after 4 transfers
XFERSIZE	13:4	63	Transfer 64 items
NXTUSEBURST	3	0	N/A for this transfer type
XFERMODE	2:0	1	Use Basic transfer mode

Note: In this example, it is not important if the peripheral makes a single request or a burst request. Since the peripheral has a FIFO that will trigger at a level of 4, the arbitration size is set to 4. If the peripheral does make a burst request, then 4 bytes will be transferred, which is what the FIFO can accomodate. If the peripheral makes a single request (if there is any space in the FIFO), then one byte will be transferred at a time. If it is important to the application that transfers only be made in bursts, then the channel useburst `SET[n]` bit should be set by writing a 1 to bit 7 of the **DMA Channel Useburst Set (DMAUSEBURSTSET)** register.

7.3.3.3 Start the Transfer

Now the channel is configured and is ready to start.

1. Enable the channel by setting bit 7 of the **DMA Channel Enable Set (DMAENASET)** register.

The µDMA controller is now configured for transfer on channel 7. The controller will make transfers to the peripheral whenever the peripheral asserts a DMA request. The transfers will continue until the entire buffer of 64 bytes has been transferred. When that happens, the µDMA controller will disable the channel and set the `XFERMODE` field of the channel control word to 0 (Stopped). The status of the transfer can be checked by reading bit 7 of the **DMA Channel Enable Set (DMAENASET)** register. This bit will be automatically cleared when the transfer is complete. The status can also be checked by reading the `XFERMODE` field of the channel control word at offset 0x078. This field will automatically be set to 0 at the end of the transfer.

If peripheral interrupts were enabled, then the peripheral interrupt handler would receive an interrupt when the entire transfer was complete.

7.3.4 Configuring a Peripheral for Ping-Pong Receive

This example will set up the µDMA controller to continuously receive 8-bit data from a peripheral into a pair of 64 byte buffers. The peripheral has a receive FIFO with a trigger level of 8. The example peripheral will use µDMA channel 8.

7.3.4.1 Configure the Channel Attributes

First, configure the channel attributes:

1. Set bit 8 of the **DMA Channel Priority Set (DMAPRIOSET)** or **DMA Channel Priority Clear (DMAPRIOCLR)** registers to set the channel to High priority or Default priority.

2. Set bit 8 of the **DMA Channel Primary Alternate Clear (DMAALTCLR)** register to select the primary channel control structure for this transfer.

3. Set bit 8 of the **DMA Channel Useburst Clear (DMAUSEBURSTCLR)** register to allow the µDMA controller to respond to single and burst requests.

4. Set bit 8 of the **DMA Channel Request Mask Clear (DMAREQMASKCLR)** register to allow the µDMA controller to recognize requests for this channel.

7.3.4.2 Configure the Channel Control Structure

Now the channel control structure must be configured. This example will transfer 8-bit bytes from the peripheral's receive FIFO register into two memory buffers of 64 bytes each. As data is received, when one buffer is full, the µDMA controller switches to use the other.

To use Ping-Pong buffering, both primary and alternate channel control structures must be used. The primary control structure for channel 8 is at offset 0x080 of the channel control table, and the alternate channel control structure is at offset 0x280. The channel control structures for channel 8 are located at the offsets shown in Table 7-11 on page 281.

Table 7-11. Primary and Alternate Channel Control Structure Offsets for Channel 8

Offset	Description
Control Table Base + 0x080	Channel 8 Primary Source End Pointer
Control Table Base + 0x084	Channel 8 Primary Destination End Pointer
Control Table Base + 0x088	Channel 8 Primary Control Word
Control Table Base + 0x280	Channel 8 Alternate Source End Pointer
Control Table Base + 0x284	Channel 8 Alternate Destination End Pointer
Control Table Base + 0x288	Channel 8 Alternate Control Word

Configure the Source and Destination

The source and destination end pointers must be set to the last address for the transfer (inclusive). Since the peripheral pointer does not change, it simply points to the peripheral's data register. Both the primary and alternate sets of pointers must be configured.

1. Set the primary source end pointer at offset 0x080 to the address of the peripheral's receive buffer.

2. Set the primary destination end pointer at offset 0x084 to the address of ping-pong buffer A + 0x3F.

3. Set the alternate source end pointer at offset 0x280 to the address of the peripheral's receive buffer.

4. Set the alternate destination end pointer at offset 0x284 to the address of ping-pong buffer B + 0x3F.

The primary control word at offset 0x088, and the alternate control word at offset 0x288 must be programmed according to Table 7-10 on page 280. Both control words are initially programmed the same way.

1. Program the primary channel control word at offset 0x088 according to Table 7-12 on page 282.

2. Program the alternate channel control word at offset 0x288 according to Table 7-12 on page 282.

Table 7-12. Channel Control Word Configuration for Peripheral Ping-Pong Receive Example

Field in DMACHCTL	Bits	Value	Description
DSTINC	31:30	0	8-bit destination address increment
DSTSIZE	29:28	0	8-bit destination data size
SRCINC	27:26	3	Source address does not increment
SRCSIZE	25:24	0	8-bit source data size
reserved	23:18	0	Reserved
ARBSIZE	17:14	3	Arbitrates after 8 transfers
XFERSIZE	13:4	63	Transfer 64 items
NXTUSEBURST	3	0	N/A for this transfer type
XFERMODE	2:0	3	Use Ping-Pong transfer mode

Note: In this example, it is not important if the peripheral makes a single request or a burst request. Since the peripheral has a FIFO that will trigger at a level of 8, the arbitration size is set to 8. If the peripheral does make a burst request, then 8 bytes will be transferred, which is what the FIFO can accomodate. If the peripheral makes a single request (if there is any data in the FIFO), then one byte will be transferred at a time. If it is important to the application that transfers only be made in bursts, then the channel useburst `SET[n]` bit should be set by writing a 1 to bit 8 of the **DMA Channel Useburst Set (DMAUSEBURSTSET)** register.

7.3.4.3 Configure the Peripheral Interrupt

In order to use µDMA Ping-Pong mode, it is best to use an interrupt handler. (It is also possible to use ping-pong mode without interrupts by polling). The interrupt handler will be triggered after each buffer is complete.

1. Configure and enable an interrupt handler for the peripheral.

7.3.4.4 Enable the µDMA Channel

Now the channel is configured and is ready to start.

1. Enable the channel by setting bit 8 of the **DMA Channel Enable Set (DMAENASET)** register.

7.3.4.5 Process Interrupts

The µDMA controller is now configured and enabled for transfer on channel 8. When the peripheral asserts the DMA request signal, the µDMA controller will make transfers into buffer A using the primary channel control structure. When the primary transfer to buffer A is complete, it will switch to the alternate channel control structure and make transfers into buffer B. At the same time, the primary channel control word mode field will be set to indicate Stopped, and an interrupt will be triggered.

When an interrupt is triggered, the interrupt handler must determine which buffer is complete and process the data, or set a flag that the data needs to be processed by non-interrupt buffer processing code. Then the next buffer transfer must be set up.

In the interrupt handler:

1. Read the primary channel control word at offset 0x088 and check the `XFERMODE` field. If the field is 0, this means buffer A is complete. If buffer A is complete, then:

a. Process the newly received data in buffer A, or signal the buffer processing code that buffer A has data available.

b. Reprogram the primary channel control word at offset 0x88 according to Table 7-12 on page 282.

2. Read the alternate channel control word at offset 0x288 and check the `XFERMODE` field. If the field is 0, this means buffer B is complete. If buffer B is complete, then:

a. Process the newly received data in buffer B, or signal the buffer processing code that buffer B has data available.

b. Reprogram the alternate channel control word at offset 0x288 according to Table 7-12 on page 282.

7.4 Register Map

Table 7-13 on page 283 lists the µDMA channel control structures and registers. The channel control structure shows the layout of one entry in the channel control table. The channel control table is located in system memory, and the location is determined by the application, that is, the base address is n/a (not applicable). In the table below, the offset for the channel control structures is the offset from the entry in the channel control table. See “Channel Configuration” on page 266 and Table 7-3 on page 267 for a description of how the entries in the channel control table are located in memory. The µDMA register addresses are given as a hexadecimal increment, relative to the µDMA base address of 0x400F.F000. Note that the µDMA module clock must be enabled before the registers can be programmed (see page 224). There must be a delay of 3 system clocks after the µDMA module clock is enabled before any µDMA module registers are accessed.

Table 7-13. µDMA Register Map

Offset	Name	Type	Reset	Description	See page
µDMA Channel Control Structure					
0x000	DMASRCENDP	R/W	-	DMA Channel Source Address End Pointer	285
0x004	DMADSTENDP	R/W	-	DMA Channel Destination Address End Pointer	286
0x008	DMACHCTL	R/W	-	DMA Channel Control Word	287
µDMA Registers					
0x000	DMASTAT	RO	0x001F.0000	DMA Status	291
0x004	DMACFG	WO	-	DMA Configuration	293
0x008	DMACTLBASE	R/W	0x0000.0000	DMA Channel Control Base Pointer	294
0x00C	DMAALTBASE	RO	0x0000.0200	DMA Alternate Channel Control Base Pointer	295
0x010	DMAWAITSTAT	RO	0x0000.0000	DMA Channel Wait on Request Status	296
0x014	DMASWREQ	WO	-	DMA Channel Software Request	297
0x018	DMAUSEBURSTSET	R/W	0x0000.0000	DMA Channel Useburst Set	298
0x01C	DMAUSEBURSTCLR	WO	-	DMA Channel Useburst Clear	300
0x020	DMAREQMASKSET	R/W	0x0000.0000	DMA Channel Request Mask Set	301

Table 7-13. µDMA Register Map *(continued)*

Offset	Name	Type	Reset	Description	See page
0x024	DMAREQMASKCLR	WO	-	DMA Channel Request Mask Clear	303
0x028	DMAENASET	R/W	0x0000.0000	DMA Channel Enable Set	304
0x02C	DMAENACLR	WO	-	DMA Channel Enable Clear	306
0x030	DMAALTSET	R/W	0x0000.0000	DMA Channel Primary Alternate Set	307
0x034	DMAALTCLR	WO	-	DMA Channel Primary Alternate Clear	309
0x038	DMAPRIOSET	R/W	0x0000.0000	DMA Channel Priority Set	310
0x03C	DMAPRIOCLR	WO	-	DMA Channel Priority Clear	312
0x04C	DMAERRCLR	R/W	0x0000.0000	DMA Bus Error Clear	313
0xFD0	DMAPeriphID4	RO	0x0000.0004	DMA Peripheral Identification 4	319
0xFE0	DMAPeriphID0	RO	0x0000.0030	DMA Peripheral Identification 0	315
0xFE4	DMAPeriphID1	RO	0x0000.00B2	DMA Peripheral Identification 1	316
0xFE8	DMAPeriphID2	RO	0x0000.000B	DMA Peripheral Identification 2	317
0xFEC	DMAPeriphID3	RO	0x0000.0000	DMA Peripheral Identification 3	318
0xFF0	DMAPCellID0	RO	0x0000.000D	DMA PrimeCell Identification 0	320
0xFF4	DMAPCellID1	RO	0x0000.00F0	DMA PrimeCell Identification 1	321
0xFF8	DMAPCellID2	RO	0x0000.0005	DMA PrimeCell Identification 2	322
0xFFC	DMAPCellID3	RO	0x0000.00B1	DMA PrimeCell Identification 3	323

7.5 µDMA Channel Control Structure

The µDMA Channel Control Structure holds the DMA transfer settings for a DMA channel. Each channel has two control structures, which are located in a table in system memory. Refer to “Channel Configuration” on page 266 for an explanation of the Channel Control Table and the Channel Control Structure.

The channel control structure is one entry in the channel control table. There is a primary and alternate structure for each channel. The primary control structures are located at offsets 0x0, 0x10, 0x20 and so on. The alternate control structures are located at offsets 0x200, 0x210, 0x220, and so on.

Register 1: DMA Channel Source Address End Pointer (DMASRCENDP), offset 0x000

DMA Channel Source Address End Pointer (DMASRCENDP) is part of the Channel Control Structure, and is used to specify the source address for a DMA transfer.

DMA Channel Source Address End Pointer (DMASRCENDP)

Base n/a
Offset 0x000
Type R/W, reset -

	31	30	29	28	27	26	25	24	23	22	21	20	19	18	17	16
	ADDR															
Type	R/W	R/W	R/W	R/W	R/W	R/W	R/W	R/W	R/W	R/W	R/W	R/W	R/W	R/W	R/W	R/W
Reset	-	-	-	-	-	-	-	-	-	-	-	-	-	-	-	-

	15	14	13	12	11	10	9	8	7	6	5	4	3	2	1	0
	ADDR															
Type	R/W	R/W	R/W	R/W	R/W	R/W	R/W	R/W	R/W	R/W	R/W	R/W	R/W	R/W	R/W	R/W
Reset	-	-	-	-	-	-	-	-	-	-	-	-	-	-	-	-

Bit/Field	Name	Type	Reset	Description
31:0	ADDR	R/W	-	Source Address End Pointer Points to the last address of the DMA transfer source (inclusive). If the source address is not incrementing, then this points at the source location itself (such as a peripheral data register).

Register 2: DMA Channel Destination Address End Pointer (DMADSTENDP), offset 0x004

DMA Channel Destination Address End Pointer (DMADSTENDP) is part of the Channel Control Structure, and is used to specify the destination address for a DMA transfer.

DMA Channel Destination Address End Pointer (DMADSTENDP)

Base n/a
Offset 0x004
Type R/W, reset -

	31	30	29	28	27	26	25	24	23	22	21	20	19	18	17	16
	ADDR															
Type	R/W	R/W	R/W	R/W	R/W	R/W	R/W	R/W	R/W	R/W	R/W	R/W	R/W	R/W	R/W	R/W
Reset	-	-	-	-	-	-	-	-	-	-	-	-	-	-	-	-

	15	14	13	12	11	10	9	8	7	6	5	4	3	2	1	0
	ADDR															
Type	R/W	R/W	R/W	R/W	R/W	R/W	R/W	R/W	R/W	R/W	R/W	R/W	R/W	R/W	R/W	R/W
Reset	-	-	-	-	-	-	-	-	-	-	-	-	-	-	-	-

Bit/Field	Name	Type	Reset	Description
31:0	ADDR	R/W	-	Destination Address End Pointer Points to the last address of the DMA transfer destination (inclusive). If the destination address is not incrementing, then this points at the destination location itself (such as a peripheral data register).

Register 3: DMA Channel Control Word (DMACHCTL), offset 0x008

DMA Channel Control Word (DMACHCTL) is part of the Channel Control Structure, and is used to specify parameters of a DMA transfer.

DMA Channel Control Word (DMACHCTL)

Base n/a
Offset 0x008
Type R/W, reset -

	31	30	29	28	27	26	25	24	23	22	21	20	19	18	17	16
	DSTINC		DSTSIZE		SRCINC		SRCSIZE		reserved						ARBSIZE	
Type	R/W	R/W	R/W	R/W	R/W	R/W	R/W	R/W	R/W	R/W	R/W	R/W	R/W	R/W	R/W	R/W
Reset	-	-	-	-	-	-	-	-	-	-	-	-	-	-	-	-

	15	14	13	12	11	10	9	8	7	6	5	4	3	2	1	0
	ARBSIZE		XFERSIZE										NXTUSEBURST	XFERMODE		
Type	R/W	R/W	R/W	R/W	R/W	R/W	R/W	R/W	R/W	R/W	R/W	R/W	R/W	R/W	R/W	R/W
Reset	-	-	-	-	-	-	-	-	-	-	-	-	-	-	-	-

Bit/Field	Name	Type	Reset	Description
31:30	DSTINC	R/W	-	Destination Address Increment Sets the bits to control the destination address increment. The address increment value must be equal or greater than the value of the destination size (`DSTSIZE`). Value Description 0x0 Byte Increment by 8-bit locations. 0x1 Half-word Increment by 16-bit locations. 0x2 Word Increment by 32-bit locations. 0x3 No increment Address remains set to the value of the Destination Address End Pointer (`DMADSTENDP`) for the channel.
29:28	DSTSIZE	R/W	-	Destination Data Size Sets the destination item data size. **Note:** You must set `DSTSIZE` to be the same as `SRCSIZE`. Value Description 0x0 Byte 8-bit data size. 0x1 Half-word 16-bit data size. 0x2 Word 32-bit data size. 0x3 Reserved

Bit/Field	Name	Type	Reset	Description
27:26	SRCINC	R/W	-	Source Address Increment Sets the bits to control the source address increment. The address increment value must be equal or greater than the value of the source size (`SRCSIZE`). Value Description 0x0 Byte Increment by 8-bit locations. 0x1 Half-word Increment by 16-bit locations. 0x2 Word Increment by 32-bit locations. 0x3 No increment Address remains set to the value of the Source Address End Pointer (`DMASRCENDP`) for the channel.
25:24	SRCSIZE	R/W	-	Source Data Size Sets the source item data size. **Note:** You must set `DSTSIZE` to be the same as `SRCSIZE`. Value Description 0x0 Byte 8-bit data size. 0x1 Half-word 16-bit data size. 0x2 Word 32-bit data size. 0x3 Reserved
23:18	reserved	R/W	-	Software should not rely on the value of a reserved bit. To provide compatibility with future products, the value of a reserved bit should be preserved across a read-modify-write operation.

Bit/Field	Name	Type	Reset	Description
17:14	ARBSIZE	R/W	-	Arbitration Size Sets the number of DMA transfers that can occur before the controller re-arbitrates. The possible arbitration rate settings represent powers of 2 and are shown below. Value — Description 0x0 — 1 Transfer Arbitrates after each DMA transfer. 0x1 — 2 Transfers 0x2 — 4 Transfers 0x3 — 8 Transfers 0x4 — 16 Transfers 0x5 — 32 Transfers 0x6 — 64 Transfers 0x7 — 128 Transfers 0x8 — 256 Transfers 0x9 — 512 Transfers 0xA-0xF — 1024 Transfers This means that no arbitration occurs during the DMA transfer because the maximum transfer size is 1024.
13:4	XFERSIZE	R/W	-	Transfer Size (minus 1) Sets the total number of items to transfer. The value of this field is 1 less than the number to transfer (value 0 means transfer 1 item). The maximum value for this 10-bit field is 1023 which represents a transfer size of 1024 items. The transfer size is the number of items, not the number of bytes. If the data size is 32 bits, then this value is the number of 32-bit words to transfer. The controller updates this field immediately prior to it entering the arbitration process, so it contains the number of outstanding DMA items that are necessary to complete the DMA cycle.
3	NXTUSEBURST	R/W	-	Next Useburst Controls whether the useburst `SET[n]` bit is automatically set for the last transfer of a peripheral scatter-gather operation. Normally, for the last transfer, if the number of remaining items to transfer is less than the arbitration size, the controller will use single transfers to complete the transaction. If this bit is set, then the controller will only use a burst transfer to complete the last transfer.

Bit/Field	Name	Type	Reset	Description
2:0	XFERMODE	R/W	-	DMA Transfer Mode Since this register is in system RAM, it has no reset value. Therefore, this field should be initialized to 0 before the channel is enabled. The operating mode of the DMA cycle. Refer to "Transfer Modes" on page 268 for a detailed explanation of transfer modes. Value Description 0x0 Stop Channel is stopped, or configuration data is invalid. 0x1 Basic The controller must receive a new request, prior to it entering the arbitration process, to enable the DMA cycle to complete. 0x2 Auto-Request The initial request (software- or peripheral-initiated) is sufficient to complete the entire transfer of `XFERSIZE` items without any further requests. 0x3 Ping-Pong The controller performs a DMA cycle using one of the channel control structures. After the DMA cycle completes, it performs a DMA cycle using the other channel control structure. After the next DMA cycle completes (and provided that the host processor has updated the original channel control data structure), it performs a DMA cycle using the original channel control data structure. The controller continues to perform DMA cycles until it either reads an invalid data structure or the host processor changes this field to 0x1 or 0x2. See "Ping-Pong" on page 268. 0x4 Memory Scatter-Gather When the controller operates in Memory Scatter-Gather mode, you must only use this value in the primary channel control data structure. See "Memory Scatter-Gather" on page 269. 0x5 Alternate Memory Scatter-Gather When the controller operates in Memory Scatter-Gather mode, you must only use this value in the alternate channel control data structure. 0x6 Peripheral Scatter-Gather When the controller operates in Peripheral Scatter-Gather mode, you must only use this value in the primary channel control data structure. See "Peripheral Scatter-Gather" on page 273. 0x7 Alternate Peripheral Scatter-Gather When the controller operates in Peripheral Scatter-Gather mode, you must only use this value in the alternate channel control data structure.

7.6 µDMA Register Descriptions

The register addresses given are relative to the µDMA base address of 0x400F.F000.

Register 4: DMA Status (DMASTAT), offset 0x000

The **DMA Status (DMASTAT)** register returns the status of the controller. You cannot read this register when the controller is in the reset state.

DMA Status (DMASTAT)

Base 0x400F.F000
Offset 0x000
Type RO, reset 0x001F.0000

	31	30	29	28	27	26	25	24	23	22	21	20	19	18	17	16
	reserved											DMACHANS				
Type	RO	RO	RO	RO	RO	RO	RO	RO	RO	RO	RO	RO	RO	RO	RO	RO
Reset	0	0	0	0	0	0	0	0	0	0	0	1	1	1	1	1

	15	14	13	12	11	10	9	8	7	6	5	4	3	2	1	0
	reserved								STATE				reserved			MASTEN
Type	RO	RO	RO	RO	RO	RO	RO	RO	RO	RO	RO	RO	RO	RO	RO	RO
Reset	0	0	0	0	0	0	0	0	0	0	0	0	0	0	0	0

Bit/Field	Name	Type	Reset	Description
31:21	reserved	RO	0x00	Software should not rely on the value of a reserved bit. To provide compatibility with future products, the value of a reserved bit should be preserved across a read-modify-write operation.
20:16	DMACHANS	RO	0x1F	Available DMA Channels Minus 1 This bit contains a value equal to the number of DMA channels the controller is configured to use, minus one. That is, 32 DMA channels.
15:8	reserved	RO	0x00	Software should not rely on the value of a reserved bit. To provide compatibility with future products, the value of a reserved bit should be preserved across a read-modify-write operation.

Bit/Field	Name	Type	Reset	Description
7:4	STATE	RO	0x00	Control State Machine State Current state of the control state machine. State can be one of the following. Value — Description 0x0 — Idle 0x1 — Read Chan Control Data Reading channel controller data. 0x2 — Read Source End Ptr Reading source end pointer. 0x3 — Read Dest End Ptr Reading destination end pointer. 0x4 — Read Source Data Reading source data. 0x5 — Write Dest Data Writing destination data. 0x6 — Wait for Req Clear Waiting for DMA request to clear. 0x7 — Write Chan Control Data Writing channel controller data. 0x8 — Stalled 0x9 — Done 0xA-0xF — Undefined
3:1	reserved	RO	0x00	Software should not rely on the value of a reserved bit. To provide compatibility with future products, the value of a reserved bit should be preserved across a read-modify-write operation.
0	MASTEN	RO	0x00	Master Enable Returns status of the controller. Value — Description 0 — Disabled 1 — Enabled

Register 5: DMA Configuration (DMACFG), offset 0x004

The **DMACFG** register controls the configuration of the controller.

DMA Configuration (DMACFG)

Base 0x400F.F000
Offset 0x004
Type WO, reset -

	31	30	29	28	27	26	25	24	23	22	21	20	19	18	17	16
	reserved															
Type	WO	WO	WO	WO	WO	WO	WO	WO	WO	WO	WO	WO	WO	WO	WO	WO
Reset	-	-	-	-	-	-	-	-	-	-	-	-	-	-	-	-

	15	14	13	12	11	10	9	8	7	6	5	4	3	2	1	0
	reserved															MASTEN
Type	WO	WO	WO	WO	WO	WO	WO	WO	WO	WO	WO	WO	WO	WO	WO	WO
Reset	-	-	-	-	-	-	-	-	-	-	-	-	-	-	-	-

Bit/Field	Name	Type	Reset	Description
31:1	reserved	WO	-	Software should not rely on the value of a reserved bit. To provide compatibility with future products, the value of a reserved bit should be preserved across a read-modify-write operation.
0	MASTEN	WO	-	Controller Master Enable Enables the controller. Value Description 0 Disables 1 Enables

Register 6: DMA Channel Control Base Pointer (DMACTLBASE), offset 0x008

The **DMACTLBASE** register must be configured so that the base pointer points to a location in system memory.

The amount of system memory that you must assign to the controller depends on the number of DMA channels used and whether you configure it to use the alternate channel control data structure. See “Channel Configuration” on page 266 for details about the Channel Control Table. The base address must be aligned on a 1024-byte boundary. You cannot read this register when the controller is in the reset state.

DMA Channel Control Base Pointer (DMACTLBASE)

Base 0x400F.F000
Offset 0x008
Type R/W, reset 0x0000.0000

	31	30	29	28	27	26	25	24	23	22	21	20	19	18	17	16
	ADDR															
Type	R/W	R/W	R/W	R/W	R/W	R/W	R/W	R/W	R/W	R/W	R/W	R/W	R/W	R/W	R/W	R/W
Reset	0	0	0	0	0	0	0	0	0	0	0	0	0	0	0	0

	15	14	13	12	11	10	9	8	7	6	5	4	3	2	1	0
	ADDR						reserved									
Type	R/W	R/W	R/W	R/W	R/W	R/W	RO	RO	RO	RO	RO	RO	RO	RO	RO	RO
Reset	0	0	0	0	0	0	0	0	0	0	0	0	0	0	0	0

Bit/Field	Name	Type	Reset	Description
31:10	ADDR	R/W	0x00	Channel Control Base Address Pointer to the base address of the channel control table. The base address must be 1024-byte aligned.
9:0	reserved	RO	0x00	Software should not rely on the value of a reserved bit. To provide compatibility with future products, the value of a reserved bit should be preserved across a read-modify-write operation.

Register 7: DMA Alternate Channel Control Base Pointer (DMAALTBASE), offset 0x00C

The **DMAALTBASE** register returns the base address of the alternate channel control data. This register removes the necessity for application software to calculate the base address of the alternate channel control structures. You cannot read this register when the controller is in the reset state.

DMA Alternate Channel Control Base Pointer (DMAALTBASE)

Base 0x400F.F000
Offset 0x00C
Type RO, reset 0x0000.0200

	31	30	29	28	27	26	25	24	23	22	21	20	19	18	17	16
	ADDR															
Type	RO	RO	RO	RO	RO	RO	RO	RO	RO	RO	RO	RO	RO	RO	RO	RO
Reset	0	0	0	0	0	0	0	0	0	0	0	0	0	0	0	0

	15	14	13	12	11	10	9	8	7	6	5	4	3	2	1	0
	ADDR															
Type	RO	RO	RO	RO	RO	RO	RO	RO	RO	RO	RO	RO	RO	RO	RO	RO
Reset	0	0	0	0	0	0	1	0	0	0	0	0	0	0	0	0

Bit/Field	Name	Type	Reset	Description
31:0	ADDR	RO	0x200	Alternate Channel Address Pointer Provides the base address of the alternate channel control structures.

Register 8: DMA Channel Wait on Request Status (DMAWAITSTAT), offset 0x010

This read-only register indicates that the µDMA channel is waiting on a request. A peripheral can pull this Low to hold off the µDMA from performing a single request until the peripheral is ready for a burst request. The use of this feature is dependent on the design of the peripheral and is used to enhance performance of the µDMA with that peripheral. You cannot read this register when the controller is in the reset state.

DMA Channel Wait on Request Status (DMAWAITSTAT)

Base 0x400F.F000
Offset 0x010
Type RO, reset 0x0000.0000

	31	30	29	28	27	26	25	24	23	22	21	20	19	18	17	16
	WAITREQ[n]															
Type	RO	RO	RO	RO	RO	RO	RO	RO	RO	RO	RO	RO	RO	RO	RO	RO
Reset	0	0	0	0	0	0	0	0	0	0	0	0	0	0	0	0

	15	14	13	12	11	10	9	8	7	6	5	4	3	2	1	0
	WAITREQ[n]															
Type	RO	RO	RO	RO	RO	RO	RO	RO	RO	RO	RO	RO	RO	RO	RO	RO
Reset	0	0	0	0	0	0	0	0	0	0	0	0	0	0	0	0

Bit/Field	Name	Type	Reset	Description
31:0	WAITREQ[n]	RO	0x00	Channel [n] Wait Status Channel wait on request status. For each channel 0 through 31, a 1 in the corresponding bit field indicates that the channel is waiting on a request.

Register 9: DMA Channel Software Request (DMASWREQ), offset 0x014

Each bit of the **DMASWREQ** register represents the corresponding DMA channel. When you set a bit, it generates a request for the specified DMA channel.

DMA Channel Software Request (DMASWREQ)

Base 0x400F.F000
Offset 0x014
Type WO, reset -

	31	30	29	28	27	26	25	24	23	22	21	20	19	18	17	16
	SWREQ[n]															
Type	WO	WO	WO	WO	WO	WO	WO	WO	WO	WO	WO	WO	WO	WO	WO	WO
Reset	-	-	-	-	-	-	-	-	-	-	-	-	-	-	-	-

	15	14	13	12	11	10	9	8	7	6	5	4	3	2	1	0
	SWREQ[n]															
Type	WO	WO	WO	WO	WO	WO	WO	WO	WO	WO	WO	WO	WO	WO	WO	WO
Reset	-	-	-	-	-	-	-	-	-	-	-	-	-	-	-	-

Bit/Field	Name	Type	Reset	Description
31:0	SWREQ[n]	WO	-	Channel [n] Software Request For each channel 0 through 31, write a 1 to the corresponding bit field to generate a software DMA request for that DMA channel. Writing a 0 does not create a DMA request for the corresponding channel.

Register 10: DMA Channel Useburst Set (DMAUSEBURSTSET), offset 0x018

Each bit of the **DMAUSEBURSTSET** register represents the corresponding DMA channel. Writing a 1 disables the peripheral's single request input from generating requests, and therefore only the peripheral's burst request generates requests. Reading the register returns the status of useburst.

When there are fewer items remaining to transfer than the arbitration (burst) size, the controller automatically clears the useburst bit to 0. This enables the remaining items to transfer using single requests. This bit should not be set for a peripheral's channel that does not support the burst request model.

Refer to “Request Types” on page 265 for more details about request types.

Reads

DMA Channel Useburst Set (DMAUSEBURSTSET)

Base 0x400F.F000
Offset 0x018
Type RO, reset 0x0000.0000

	31	30	29	28	27	26	25	24	23	22	21	20	19	18	17	16
	SET[n]															
Type	R	R	R	R	R	R	R	R	R	R	R	R	R	R	R	R
Reset	0	0	0	0	0	0	0	0	0	0	0	0	0	0	0	0

	15	14	13	12	11	10	9	8	7	6	5	4	3	2	1	0
	SET[n]															
Type	R	R	R	R	R	R	R	R	R	R	R	R	R	R	R	R
Reset	0	0	0	0	0	0	0	0	0	0	0	0	0	0	0	0

Bit/Field	Name	Type	Reset	Description
31:0	SET[n]	R	0x00	Channel [n] Useburst Status Returns the useburst status of channel [n]. Value Description 0 Single and Burst DMA channel [n] responds to single or burst requests. 1 Burst Only DMA channel [n] responds only to burst requests.

Writes

DMA Channel Useburst Set (DMAUSEBURSTSET)

Base 0x400F.F000
Offset 0x018
Type WO, reset 0x0000.0000

	31	30	29	28	27	26	25	24	23	22	21	20	19	18	17	16
	SET[n]															
Type	W	W	W	W	W	W	W	W	W	W	W	W	W	W	W	W
Reset	0	0	0	0	0	0	0	0	0	0	0	0	0	0	0	0

	15	14	13	12	11	10	9	8	7	6	5	4	3	2	1	0
	SET[n]															
Type	W	W	W	W	W	W	W	W	W	W	W	W	W	W	W	W
Reset	0	0	0	0	0	0	0	0	0	0	0	0	0	0	0	0

Bit/Field	Name	Type	Reset	Description
31:0	SET[n]	W	0x00	Channel [n] Useburst Set Sets useburst bit on channel [n]. Value Description 0 No Effect Use the **DMAUSEBURSTCLR** register to clear bit [n] to 0. 1 Burst Only DMA channel [n] responds only to burst requests.

Register 11: DMA Channel Useburst Clear (DMAUSEBURSTCLR), offset 0x01C

Each bit of the **DMAUSEBURSTCLR** register represents the corresponding DMA channel. Writing a 1 enables `dma_sreq[n]` to generate requests.

DMA Channel Useburst Clear (DMAUSEBURSTCLR)

Base 0x400F.F000
Offset 0x01C
Type WO, reset -

	31	30	29	28	27	26	25	24	23	22	21	20	19	18	17	16
	CLR[n]															
Type	WO	WO	WO	WO	WO	WO	WO	WO	WO	WO	WO	WO	WO	WO	WO	WO
Reset	-	-	-	-	-	-	-	-	-	-	-	-	-	-	-	-

	15	14	13	12	11	10	9	8	7	6	5	4	3	2	1	0
	CLR[n]															
Type	WO	WO	WO	WO	WO	WO	WO	WO	WO	WO	WO	WO	WO	WO	WO	WO
Reset	-	-	-	-	-	-	-	-	-	-	-	-	-	-	-	-

Bit/Field	Name	Type	Reset	Description
31:0	CLR[n]	WO	-	Channel [n] Useburst Clear Clears useburst bit on channel [n]. Value Description 0 No Effect Use the **DMAUSEBURSTSET** to set bit [n] to 1. 1 Single and Burst DMA channel [n] responds to single and burst requests.

Register 12: DMA Channel Request Mask Set (DMAREQMASKSET), offset 0x020

Each bit of the **DMAREQMASKSET** register represents the corresponding DMA channel. Writing a 1 disables DMA requests for the channel. Reading the register returns the request mask status. When a µDMA channel's request is masked, that means the peripheral can no longer request µDMA transfers. The channel can then be used for software-initiated transfers.

Reads

DMA Channel Request Mask Set (DMAREQMASKSET)

Base 0x400F.F000
Offset 0x020
Type RO, reset 0x0000.0000

	31	30	29	28	27	26	25	24	23	22	21	20	19	18	17	16
	SET[n]															
Type	R	R	R	R	R	R	R	R	R	R	R	R	R	R	R	R
Reset	0	0	0	0	0	0	0	0	0	0	0	0	0	0	0	0

	15	14	13	12	11	10	9	8	7	6	5	4	3	2	1	0
	SET[n]															
Type	R	R	R	R	R	R	R	R	R	R	R	R	R	R	R	R
Reset	0	0	0	0	0	0	0	0	0	0	0	0	0	0	0	0

Bit/Field	Name	Type	Reset	Description
31:0	SET[n]	R	0x00	Channel [n] Request Mask Status Returns the channel request mask status. Value Description 0 Enabled External requests are not masked for channel [n]. 1 Masked External requests are masked for channel [n].

Writes

DMA Channel Request Mask Set (DMAREQMASKSET)

Base 0x400F.F000
Offset 0x020
Type WO, reset 0x0000.0000

	31	30	29	28	27	26	25	24	23	22	21	20	19	18	17	16
	SET[n]															
Type	W	W	W	W	W	W	W	W	W	W	W	W	W	W	W	W
Reset	0	0	0	0	0	0	0	0	0	0	0	0	0	0	0	0

	15	14	13	12	11	10	9	8	7	6	5	4	3	2	1	0
	SET[n]															
Type	W	W	W	W	W	W	W	W	W	W	W	W	W	W	W	W
Reset	0	0	0	0	0	0	0	0	0	0	0	0	0	0	0	0

Bit/Field	Name	Type	Reset	Description
31:0	SET[n]	W	0x00	Channel [n] Request Mask Set Masks (disables) the corresponding channel [n] from generating DMA requests. Value Description 0 No Effect Use the **DMAREQMASKCLR** register to clear the request mask. 1 Masked Masks (disables) DMA requests on channel [n].

Register 13: DMA Channel Request Mask Clear (DMAREQMASKCLR), offset 0x024

Each bit of the **DMAREQMASKCLR** register represents the corresponding DMA channel. Writing a 1 clears the request mask for the channel, and enables the channel to receive DMA requests.

DMA Channel Request Mask Clear (DMAREQMASKCLR)

Base 0x400F.F000
Offset 0x024
Type WO, reset -

	31	30	29	28	27	26	25	24	23	22	21	20	19	18	17	16
	CLR[n]															
Type	WO	WO	WO	WO	WO	WO	WO	WO	WO	WO	WO	WO	WO	WO	WO	WO
Reset	-	-	-	-	-	-	-	-	-	-	-	-	-	-	-	-

	15	14	13	12	11	10	9	8	7	6	5	4	3	2	1	0
	CLR[n]															
Type	WO	WO	WO	WO	WO	WO	WO	WO	WO	WO	WO	WO	WO	WO	WO	WO
Reset	-	-	-	-	-	-	-	-	-	-	-	-	-	-	-	-

Bit/Field	Name	Type	Reset	Description
31:0	CLR[n]	WO	-	Channel [n] Request Mask Clear Set the appropriate bit to clear the DMA request mask for channel [n]. This will enable DMA requests for the channel. Value Description 0 No Effect Use the **DMAREQMASKSET** register to set the request mask. 1 Clear Mask Clears the request mask for the DMA channel. This enables DMA requests for the channel.

Register 14: DMA Channel Enable Set (DMAENASET), offset 0x028

Each bit of the **DMAENASET** register represents the corresponding DMA channel. Writing a 1 enables the DMA channel. Reading the register returns the enable status of the channels. If a channel is enabled but the request mask is set (**DMAREQMASKSET**), then the channel can be used for software-initiated transfers.

Reads

DMA Channel Enable Set (DMAENASET)

Base 0x400F.F000
Offset 0x028
Type RO, reset 0x0000.0000

	31	30	29	28	27	26	25	24	23	22	21	20	19	18	17	16
	SET[n]															
Type	R	R	R	R	R	R	R	R	R	R	R	R	R	R	R	R
Reset	0	0	0	0	0	0	0	0	0	0	0	0	0	0	0	0

	15	14	13	12	11	10	9	8	7	6	5	4	3	2	1	0
	SET[n]															
Type	R	R	R	R	R	R	R	R	R	R	R	R	R	R	R	R
Reset	0	0	0	0	0	0	0	0	0	0	0	0	0	0	0	0

Bit/Field	Name	Type	Reset	Description
31:0	SET[n]	R	0x00	Channel [n] Enable Status Returns the enable status of the channels. Value Description 0 Disabled 1 Enabled

Writes

DMA Channel Enable Set (DMAENASET)

Base 0x400F.F000
Offset 0x028
Type WO, reset 0x0000.0000

	31	30	29	28	27	26	25	24	23	22	21	20	19	18	17	16
	SET[n]															
Type	W	W	W	W	W	W	W	W	W	W	W	W	W	W	W	W
Reset	0	0	0	0	0	0	0	0	0	0	0	0	0	0	0	0

	15	14	13	12	11	10	9	8	7	6	5	4	3	2	1	0
	SET[n]															
Type	W	W	W	W	W	W	W	W	W	W	W	W	W	W	W	W
Reset	0	0	0	0	0	0	0	0	0	0	0	0	0	0	0	0

Bit/Field	Name	Type	Reset	Description
31:0	SET[n]	W	0x00	Channel [n] Enable Set Enables the corresponding channels. **Note:** The controller disables a channel when it completes the DMA cycle. Value Description 0 No Effect Use the **DMAENACLR** register to disable a channel. 1 Enable Enables channel [n].

Register 15: DMA Channel Enable Clear (DMAENACLR), offset 0x02C

Each bit of the **DMAENACLR** register represents the corresponding DMA channel. Writing a 1 disables the specified DMA channel.

DMA Channel Enable Clear (DMAENACLR)

Base 0x400F.F000
Offset 0x02C
Type WO, reset -

	31	30	29	28	27	26	25	24	23	22	21	20	19	18	17	16
	CLR[n]															
Type	WO	WO	WO	WO	WO	WO	WO	WO	WO	WO	WO	WO	WO	WO	WO	WO
Reset	-	-	-	-	-	-	-	-	-	-	-	-	-	-	-	-

	15	14	13	12	11	10	9	8	7	6	5	4	3	2	1	0
	CLR[n]															
Type	WO	WO	WO	WO	WO	WO	WO	WO	WO	WO	WO	WO	WO	WO	WO	WO
Reset	-	-	-	-	-	-	-	-	-	-	-	-	-	-	-	-

Bit/Field	Name	Type	Reset	Description
31:0	CLR[n]	WO	-	Clear Channel [n] Enable Set the appropriate bit to disable the corresponding DMA channel. **Note:** The controller disables a channel when it completes the DMA cycle. Value Description 0 No Effect Use the **DMAENASET** register to enable DMA channels. 1 Disable Disables channel [n].

Register 16: DMA Channel Primary Alternate Set (DMAALTSET), offset 0x030

Each bit of the **DMAALTSET** register represents the corresponding DMA channel. Writing a 1 configures the DMA channel to use the alternate control data structure. Reading the register returns the status of which control data structure is in use for the corresponding DMA channel.

Reads

DMA Channel Primary Alternate Set (DMAALTSET)

Base 0x400F.F000
Offset 0x030
Type RO, reset 0x0000.0000

	31	30	29	28	27	26	25	24	23	22	21	20	19	18	17	16
	SET[n]															
Type	R	R	R	R	R	R	R	R	R	R	R	R	R	R	R	R
Reset	0	0	0	0	0	0	0	0	0	0	0	0	0	0	0	0

	15	14	13	12	11	10	9	8	7	6	5	4	3	2	1	0
	SET[n]															
Type	R	R	R	R	R	R	R	R	R	R	R	R	R	R	R	R
Reset	0	0	0	0	0	0	0	0	0	0	0	0	0	0	0	0

Bit/Field	Name	Type	Reset	Description
31:0	SET[n]	R	0x00	Channel [n] Alternate Status Returns the channel control data structure status. Value Description 0 Primary DMA channel [n] is using the primary control structure. 1 Alternate DMA channel [n] is using the alternate control structure.

Writes

DMA Channel Primary Alternate Set (DMAALTSET)

Base 0x400F.F000
Offset 0x030
Type WO, reset 0x0000.0000

	31	30	29	28	27	26	25	24	23	22	21	20	19	18	17	16
	SET[n]															
Type	W	W	W	W	W	W	W	W	W	W	W	W	W	W	W	W
Reset	0	0	0	0	0	0	0	0	0	0	0	0	0	0	0	0

	15	14	13	12	11	10	9	8	7	6	5	4	3	2	1	0
	SET[n]															
Type	W	W	W	W	W	W	W	W	W	W	W	W	W	W	W	W
Reset	0	0	0	0	0	0	0	0	0	0	0	0	0	0	0	0

Bit/Field	Name	Type	Reset	Description
31:0	SET[n]	W	0x00	Channel [n] Alternate Set Selects the alternate channel control data structure for the corresponding DMA channel. **Note:** For Ping-Pong and Scatter-Gather DMA cycle types, the controller automatically sets these bits to select the alternate channel control data structure. Value Description 0 No Effect Use the **DMAALTCLR** register to set bit [n] to 0. 1 Alternate Selects the alternate control data structure for channel [n].

Register 17: DMA Channel Primary Alternate Clear (DMAALTCLR), offset 0x034

Each bit of the **DMAALTCLR** register represents the corresponding DMA channel. Writing a 1 configures the DMA channel to use the primary control data structure.

DMA Channel Primary Alternate Clear (DMAALTCLR)

Base 0x400F.F000
Offset 0x034
Type WO, reset -

	31	30	29	28	27	26	25	24	23	22	21	20	19	18	17	16
	CLR[n]															
Type	WO	WO	WO	WO	WO	WO	WO	WO	WO	WO	WO	WO	WO	WO	WO	WO
Reset	-	-	-	-	-	-	-	-	-	-	-	-	-	-	-	-

	15	14	13	12	11	10	9	8	7	6	5	4	3	2	1	0
	CLR[n]															
Type	WO	WO	WO	WO	WO	WO	WO	WO	WO	WO	WO	WO	WO	WO	WO	WO
Reset	-	-	-	-	-	-	-	-	-	-	-	-	-	-	-	-

Bit/Field	Name	Type	Reset	Description
31:0	CLR[n]	WO	-	Channel [n] Alternate Clear Set the appropriate bit to select the primary control data structure for the corresponding DMA channel. **Note:** For Ping-Pong and Scatter-Gather DMA cycle types, the controller sets these bits to select the primary channel control data structure. Value Description 0 No Effect Use the **DMAALTSET** register to select the alternate control data structure. 1 Primary Selects the primary control data structure for channel [n].

Register 18: DMA Channel Priority Set (DMAPRIOSET), offset 0x038

Each bit of the the **DMAPRIOSET** register represents the corresponding DMA channel. Writing a 1 configures the DMA channel to have a high priority level. Reading the register returns the status of the channel priority mask.

Reads

DMA Channel Priority Set (DMAPRIOSET)

Base 0x400F.F000
Offset 0x038
Type RO, reset 0x0000.0000

	31	30	29	28	27	26	25	24	23	22	21	20	19	18	17	16
	SET[n]															
Type	R	R	R	R	R	R	R	R	R	R	R	R	R	R	R	R
Reset	0	0	0	0	0	0	0	0	0	0	0	0	0	0	0	0

	15	14	13	12	11	10	9	8	7	6	5	4	3	2	1	0
	SET[n]															
Type	R	R	R	R	R	R	R	R	R	R	R	R	R	R	R	R
Reset	0	0	0	0	0	0	0	0	0	0	0	0	0	0	0	0

Bit/Field	Name	Type	Reset	Description
31:0	SET[n]	R	0x00	Channel [n] Priority Status Returns the channel priority status. Value Description 0 Default Priority DMA channel [n] is using the default priority level. 1 High Priority DMA channel [n] is using a High Priority level.

Writes

DMA Channel Priority Set (DMAPRIOSET)

Base 0x400F.F000
Offset 0x038
Type WO, reset 0x0000.0000

	31	30	29	28	27	26	25	24	23	22	21	20	19	18	17	16
	SET[n]															
Type	W	W	W	W	W	W	W	W	W	W	W	W	W	W	W	W
Reset	0	0	0	0	0	0	0	0	0	0	0	0	0	0	0	0

	15	14	13	12	11	10	9	8	7	6	5	4	3	2	1	0
	SET[n]															
Type	W	W	W	W	W	W	W	W	W	W	W	W	W	W	W	W
Reset	0	0	0	0	0	0	0	0	0	0	0	0	0	0	0	0

Bit/Field	Name	Type	Reset	Description
31:0	SET[n]	W	0x00	Channel [n] Priority Set Sets the channel priority to high. Value Description 0 No Effect Use the **DMAPRIOCLR** register to set channel [n] to the default priority level. 1 High Priority Sets DMA channel [n] to a High Priority level.

Register 19: DMA Channel Priority Clear (DMAPRIOCLR), offset 0x03C

Each bit of the **DMAPRIOCLR** register represents the corresponding DMA channel. Writing a 1 configures the DMA channel to have the default priority level.

DMA Channel Priority Clear (DMAPRIOCLR)

Base 0x400F.F000
Offset 0x03C
Type WO, reset -

	31	30	29	28	27	26	25	24	23	22	21	20	19	18	17	16
	CLR[n]															
Type	WO	WO	WO	WO	WO	WO	WO	WO	WO	WO	WO	WO	WO	WO	WO	WO
Reset	-	-	-	-	-	-	-	-	-	-	-	-	-	-	-	-

	15	14	13	12	11	10	9	8	7	6	5	4	3	2	1	0
	CLR[n]															
Type	WO	WO	WO	WO	WO	WO	WO	WO	WO	WO	WO	WO	WO	WO	WO	WO
Reset	-	-	-	-	-	-	-	-	-	-	-	-	-	-	-	-

Bit/Field	Name	Type	Reset	Description
31:0	CLR[n]	WO	-	Channel [n] Priority Clear Set the appropriate bit to clear the high priority level for the specified DMA channel. Value Description 0 No Effect Use the **DMAPRIOSET** register to set channel [n] to the High priority level. 1 Default Priority Sets DMA channel [n] to a Default priority level.

Register 20: DMA Bus Error Clear (DMAERRCLR), offset 0x04C

The **DMAERRCLR** register is used to read and clear the DMA bus error status. The error status will be set if the µDMA controller encountered a bus error while performing a DMA transfer. If a bus error occurs on a channel, that channel will be automatically disabled by the µDMA controller. The other channels are unaffected.

Reads

DMA Bus Error Clear (DMAERRCLR)

Base 0x400F.F000
Offset 0x04C
Type RO, reset 0x0000.0000

	31	30	29	28	27	26	25	24	23	22	21	20	19	18	17	16
	reserved															
Type	RO	RO	RO	RO	RO	RO	RO	RO	RO	RO	RO	RO	RO	RO	RO	RO
Reset	0	0	0	0	0	0	0	0	0	0	0	0	0	0	0	0

	15	14	13	12	11	10	9	8	7	6	5	4	3	2	1	0
	reserved															ERRCLR
Type	RO	RO	RO	RO	RO	RO	RO	RO	RO	RO	RO	RO	RO	RO	RO	R
Reset	0	0	0	0	0	0	0	0	0	0	0	0	0	0	0	0

Bit/Field	Name	Type	Reset	Description
31:1	reserved	RO	0x00	Software should not rely on the value of a reserved bit. To provide compatibility with future products, the value of a reserved bit should be preserved across a read-modify-write operation.
0	ERRCLR	R	0	DMA Bus Error Status Value Description 0 Low No bus error is pending. 1 High Bus error is pending.

Writes

DMA Bus Error Clear (DMAERRCLR)

Base 0x400F.F000
Offset 0x04C
Type WO, reset 0x0000.0000

	31	30	29	28	27	26	25	24	23	22	21	20	19	18	17	16
	reserved															
Type	RO	RO	RO	RO	RO	RO	RO	RO	RO	RO	RO	RO	RO	RO	RO	RO
Reset	0	0	0	0	0	0	0	0	0	0	0	0	0	0	0	0

	15	14	13	12	11	10	9	8	7	6	5	4	3	2	1	0
	reserved															ERRCLR
Type	RO	RO	RO	RO	RO	RO	RO	RO	RO	RO	RO	RO	RO	RO	RO	W
Reset	0	0	0	0	0	0	0	0	0	0	0	0	0	0	0	0

Bit/Field	Name	Type	Reset	Description
31:1	reserved	RO	0x00	Software should not rely on the value of a reserved bit. To provide compatibility with future products, the value of a reserved bit should be preserved across a read-modify-write operation.
0	ERRCLR	W	0	DMA Bus Error Clear Clears the bus error. Value Description 0 No Effect Bus error status is unchanged. 1 Clear Clears a pending bus error.

Register 21: DMA Peripheral Identification 0 (DMAPeriphID0), offset 0xFE0

The **DMAPeriphIDn** registers are hard-coded and the fields within the registers determine the reset values.

DMA Peripheral Identification 0 (DMAPeriphID0)

Base 0x400F.F000
Offset 0xFE0
Type RO, reset 0x0000.0030

	31	30	29	28	27	26	25	24	23	22	21	20	19	18	17	16
	reserved															
Type	RO	RO	RO	RO	RO	RO	RO	RO	RO	RO	RO	RO	RO	RO	RO	RO
Reset	0	0	0	0	0	0	0	0	0	0	0	0	0	0	0	0

	15	14	13	12	11	10	9	8	7	6	5	4	3	2	1	0
	reserved								PID0							
Type	RO	RO	RO	RO	RO	RO	RO	RO	RO	RO	RO	RO	RO	RO	RO	RO
Reset	0	0	0	0	0	0	0	0	0	0	1	1	0	0	0	0

Bit/Field	Name	Type	Reset	Description
31:8	reserved	RO	0x00	Software should not rely on the value of a reserved bit. To provide compatibility with future products, the value of a reserved bit should be preserved across a read-modify-write operation.
7:0	PID0	RO	0x30	DMA Peripheral ID Register[7:0] Can be used by software to identify the presence of this peripheral.

Register 22: DMA Peripheral Identification 1 (DMAPeriphID1), offset 0xFE4

The **DMAPeriphIDn** registers are hard-coded and the fields within the registers determine the reset values.

DMA Peripheral Identification 1 (DMAPeriphID1)

Base 0x400F.F000
Offset 0xFE4
Type RO, reset 0x0000.00B2

	31	30	29	28	27	26	25	24	23	22	21	20	19	18	17	16
	reserved															
Type	RO	RO	RO	RO	RO	RO	RO	RO	RO	RO	RO	RO	RO	RO	RO	RO
Reset	0	0	0	0	0	0	0	0	0	0	0	0	0	0	0	0

	15	14	13	12	11	10	9	8	7	6	5	4	3	2	1	0
	reserved								PID1							
Type	RO	RO	RO	RO	RO	RO	RO	RO	RO	RO	RO	RO	RO	RO	RO	RO
Reset	0	0	0	0	0	0	0	0	1	0	1	1	0	0	1	0

Bit/Field	Name	Type	Reset	Description
31:8	reserved	RO	0x00	Software should not rely on the value of a reserved bit. To provide compatibility with future products, the value of a reserved bit should be preserved across a read-modify-write operation.
7:0	PID1	RO	0xB2	DMA Peripheral ID Register[15:8] Can be used by software to identify the presence of this peripheral.

Register 23: DMA Peripheral Identification 2 (DMAPeriphID2), offset 0xFE8

The **DMAPeriphIDn** registers are hard-coded and the fields within the registers determine the reset values.

DMA Peripheral Identification 2 (DMAPeriphID2)

Base 0x400F.F000
Offset 0xFE8
Type RO, reset 0x0000.000B

	31	30	29	28	27	26	25	24	23	22	21	20	19	18	17	16
	reserved															
Type	RO	RO	RO	RO	RO	RO	RO	RO	RO	RO	RO	RO	RO	RO	RO	RO
Reset	0	0	0	0	0	0	0	0	0	0	0	0	0	0	0	0

	15	14	13	12	11	10	9	8	7	6	5	4	3	2	1	0
	reserved								PID2							
Type	RO	RO	RO	RO	RO	RO	RO	RO	RO	RO	RO	RO	RO	RO	RO	RO
Reset	0	0	0	0	0	0	0	0	0	0	0	0	1	0	1	1

Bit/Field	Name	Type	Reset	Description
31:8	reserved	RO	0x00	Software should not rely on the value of a reserved bit. To provide compatibility with future products, the value of a reserved bit should be preserved across a read-modify-write operation.
7:0	PID2	RO	0x0B	DMA Peripheral ID Register[23:16] Can be used by software to identify the presence of this peripheral.

Register 24: DMA Peripheral Identification 3 (DMAPeriphID3), offset 0xFEC

The **DMAPeriphIDn** registers are hard-coded and the fields within the registers determine the reset values.

DMA Peripheral Identification 3 (DMAPeriphID3)

Base 0x400F.F000
Offset 0xFEC
Type RO, reset 0x0000.0000

	31	30	29	28	27	26	25	24	23	22	21	20	19	18	17	16
	reserved															
Type	RO	RO	RO	RO	RO	RO	RO	RO	RO	RO	RO	RO	RO	RO	RO	RO
Reset	0	0	0	0	0	0	0	0	0	0	0	0	0	0	0	0

	15	14	13	12	11	10	9	8	7	6	5	4	3	2	1	0
	reserved								PID3							
Type	RO	RO	RO	RO	RO	RO	RO	RO	RO	RO	RO	RO	RO	RO	RO	RO
Reset	0	0	0	0	0	0	0	0	0	0	0	0	0	0	0	0

Bit/Field	Name	Type	Reset	Description
31:8	reserved	RO	0x00	Software should not rely on the value of a reserved bit. To provide compatibility with future products, the value of a reserved bit should be preserved across a read-modify-write operation.
7:0	PID3	RO	0x00	DMA Peripheral ID Register[31:24] Can be used by software to identify the presence of this peripheral.

Register 25: DMA Peripheral Identification 4 (DMAPeriphID4), offset 0xFD0

The **DMAPeriphIDn** registers are hard-coded and the fields within the registers determine the reset values.

DMA Peripheral Identification 4 (DMAPeriphID4)

Base 0x400F.F000
Offset 0xFD0
Type RO, reset 0x0000.0004

	31	30	29	28	27	26	25	24	23	22	21	20	19	18	17	16
	reserved															
Type	RO	RO	RO	RO	RO	RO	RO	RO	RO	RO	RO	RO	RO	RO	RO	RO
Reset	0	0	0	0	0	0	0	0	0	0	0	0	0	0	0	0

	15	14	13	12	11	10	9	8	7	6	5	4	3	2	1	0
	reserved								PID4							
Type	RO	RO	RO	RO	RO	RO	RO	RO	RO	RO	RO	RO	RO	RO	RO	RO
Reset	0	0	0	0	0	0	0	0	0	0	0	0	0	1	0	0

Bit/Field	Name	Type	Reset	Description
31:8	reserved	RO	0x00	Software should not rely on the value of a reserved bit. To provide compatibility with future products, the value of a reserved bit should be preserved across a read-modify-write operation.
7:0	PID4	RO	0x04	DMA Peripheral ID Register Can be used by software to identify the presence of this peripheral.

Register 26: DMA PrimeCell Identification 0 (DMAPCellID0), offset 0xFF0

The **DMAPCellIDn** registers are hard-coded and the fields within the registers determine the reset values.

DMA PrimeCell Identification 0 (DMAPCellID0)

Base 0x400F.F000
Offset 0xFF0
Type RO, reset 0x0000.000D

	31	30	29	28	27	26	25	24	23	22	21	20	19	18	17	16
	reserved															
Type	RO	RO	RO	RO	RO	RO	RO	RO	RO	RO	RO	RO	RO	RO	RO	RO
Reset	0	0	0	0	0	0	0	0	0	0	0	0	0	0	0	0

	15	14	13	12	11	10	9	8	7	6	5	4	3	2	1	0
	reserved								CID0							
Type	RO	RO	RO	RO	RO	RO	RO	RO	RO	RO	RO	RO	RO	RO	RO	RO
Reset	0	0	0	0	0	0	0	0	0	0	0	0	1	1	0	1

Bit/Field	Name	Type	Reset	Description
31:8	reserved	RO	0x00	Software should not rely on the value of a reserved bit. To provide compatibility with future products, the value of a reserved bit should be preserved across a read-modify-write operation.
7:0	CID0	RO	0x0D	DMA PrimeCell ID Register[7:0] Provides software a standard cross-peripheral identification system.

Register 27: DMA PrimeCell Identification 1 (DMAPCellID1), offset 0xFF4

The **DMAPCellIDn** registers are hard-coded and the fields within the registers determine the reset values.

DMA PrimeCell Identification 1 (DMAPCellID1)

Base 0x400F.F000
Offset 0xFF4
Type RO, reset 0x0000.00F0

	31	30	29	28	27	26	25	24	23	22	21	20	19	18	17	16
	reserved															
Type	RO	RO	RO	RO	RO	RO	RO	RO	RO	RO	RO	RO	RO	RO	RO	RO
Reset	0	0	0	0	0	0	0	0	0	0	0	0	0	0	0	0

	15	14	13	12	11	10	9	8	7	6	5	4	3	2	1	0
	reserved								CID1							
Type	RO	RO	RO	RO	RO	RO	RO	RO	RO	RO	RO	RO	RO	RO	RO	RO
Reset	0	0	0	0	0	0	0	0	1	1	1	1	0	0	0	0

Bit/Field	Name	Type	Reset	Description
31:8	reserved	RO	0x00	Software should not rely on the value of a reserved bit. To provide compatibility with future products, the value of a reserved bit should be preserved across a read-modify-write operation.
7:0	CID1	RO	0xF0	DMA PrimeCell ID Register[15:8] Provides software a standard cross-peripheral identification system.

Register 28: DMA PrimeCell Identification 2 (DMAPCellID2), offset 0xFF8

The **DMAPCellIDn** registers are hard-coded and the fields within the registers determine the reset values.

DMA PrimeCell Identification 2 (DMAPCellID2)

Base 0x400F.F000
Offset 0xFF8
Type RO, reset 0x0000.0005

	31	30	29	28	27	26	25	24	23	22	21	20	19	18	17	16
	reserved															
Type	RO	RO	RO	RO	RO	RO	RO	RO	RO	RO	RO	RO	RO	RO	RO	RO
Reset	0	0	0	0	0	0	0	0	0	0	0	0	0	0	0	0

	15	14	13	12	11	10	9	8	7	6	5	4	3	2	1	0
	reserved								CID2							
Type	RO	RO	RO	RO	RO	RO	RO	RO	RO	RO	RO	RO	RO	RO	RO	RO
Reset	0	0	0	0	0	0	0	0	0	0	0	0	0	1	0	1

Bit/Field	Name	Type	Reset	Description
31:8	reserved	RO	0x00	Software should not rely on the value of a reserved bit. To provide compatibility with future products, the value of a reserved bit should be preserved across a read-modify-write operation.
7:0	CID2	RO	0x05	DMA PrimeCell ID Register[23:16] Provides software a standard cross-peripheral identification system.

Register 29: DMA PrimeCell Identification 3 (DMAPCellID3), offset 0xFFC

The **DMAPCellIDn** registers are hard-coded and the fields within the registers determine the reset values.

DMA PrimeCell Identification 3 (DMAPCellID3)

Base 0x400F.F000
Offset 0xFFC
Type RO, reset 0x0000.00B1

	31	30	29	28	27	26	25	24	23	22	21	20	19	18	17	16
	reserved															
Type	RO	RO	RO	RO	RO	RO	RO	RO	RO	RO	RO	RO	RO	RO	RO	RO
Reset	0	0	0	0	0	0	0	0	0	0	0	0	0	0	0	0

	15	14	13	12	11	10	9	8	7	6	5	4	3	2	1	0
	reserved								CID3							
Type	RO	RO	RO	RO	RO	RO	RO	RO	RO	RO	RO	RO	RO	RO	RO	RO
Reset	0	0	0	0	0	0	0	0	1	0	1	1	0	0	0	1

Bit/Field	Name	Type	Reset	Description
31:8	reserved	RO	0x00	Software should not rely on the value of a reserved bit. To provide compatibility with future products, the value of a reserved bit should be preserved across a read-modify-write operation.
7:0	CID3	RO	0xB1	DMA PrimeCell ID Register[31:24] Provides software a standard cross-peripheral identification system.

8 General-Purpose Input/Outputs (GPIOs)

The GPIO module is composed of five physical GPIO blocks, each corresponding to an individual GPIO port (Port A, Port B, Port C, Port D, Port E). The GPIO module supports 1-33 programmable input/output pins, depending on the peripherals being used.

The GPIO module has the following features:

- 1-33 GPIOs, depending on configuration
- 5-V-tolerant in input configuration
- Two means of port access: either Advanced High-Performance Bus (AHB) with better back-to-back access performance, or the legacy Advanced Peripheral Bus (APB) for backwards-compatibility with existing code
- Fast toggle capable of a change every clock cycle for ports on AHB, every two clock cycles for ports on APB
- Programmable control for GPIO interrupts
  - Interrupt generation masking
  - Edge-triggered on rising, falling, or both
  - Level-sensitive on High or Low values
- Bit masking in both read and write operations through address lines
- Can initiate an ADC sample sequence
- Pins configured as digital inputs are Schmitt-triggered.
- Programmable control for GPIO pad configuration
  - Weak pull-up or pull-down resistors
  - 2-mA, 4-mA, and 8-mA pad drive for digital communication; up to four pads can be configured with an 18-mA pad drive for high-current applications
  - Slew rate control for the 8-mA drive
  - Open drain enables
  - Digital input enables

8.1 Signal Description

GPIO signals have alternate hardware functions. Table 8-3 on page 326 lists the GPIO pins and their analog and digital alternate functions. The `AINx` analog signals are not 5-V tolerant and go through an isolation circuit before reaching their circuitry. These signals are configured by clearing the corresponding `DEN` bit in the **GPIO Digital Enable (GPIODEN)** register and setting the corresponding `AMSEL` bit in the **GPIO Analog Mode Select (GPIOAMSEL)** register. The digital alternate hardware functions are enabled by setting the appropriate bit in the **GPIO Alternate Function Select (GPIOAFSEL)** and **GPIODEN** registers and configuring the `PMCx` bit field in the **GPIO Port Control**

(GPIOPCTL) register to the numeric enoding shown in the table below. Note that each pin must be programmed individually; no type of grouping is implied by the columns in the table.

Important: All GPIO pins are configured as GPIOs and tri-stated by default (**GPIOAFSEL**=0, **GPIODEN**=0, **GPIOPDR**=0, **GPIOPUR**=0, and **GPIOPCTL**=0, with the exception of the four JTAG/SWD pins (shown in the table below). A Power-On-Reset (P0R) or asserting RST puts the pins back to their default state.

Table 8-1. GPIO Pins With Non-Zero Reset Values

GPIO Pins	Default State	GPIOAFSEL	GPIODEN	GPIOPDR	GPIOPUR	GPIOPCTL
PA[1:0]	UART0	1	1	0	0	0x1
PA[5:2]	SSI0	1	1	0	0	0x1
PC[3:0]	JTAG/SWD	1	1	0	1	0x3

Table 8-2. GPIO Pins and Alternate Functions (64LQFP)

IO	Pin Number	Multiplexed Function	Multiplexed Function
PA0	17	U0Rx	
PA1	18	U0Tx	
PA2	19	SSI0Clk	
PA3	20	SSI0Fss	
PA4	21	SSI0Rx	
PA5	22	SSI0Tx	
PA6	25	PWM0	
PA7	26	PWM1	
PB0	41	PWM2	
PB1	42	PWM3	
PB2	47	IDX0	
PB3	27	Fault0	
PB4	58	CAN0Rx	
PB5	57	CAN0Tx	
PB6	56	Fault1	
PB7	55	NMI	
PC0	52	TCK	SWCLK
PC1	51	TMS	SWDIO
PC2	50	TDI	
PC3	49	TDO	SWO
PC4	11	PhA0	
PC5	14	CCP1	
PC6	15	CCP0	
PC7	16	PhB0	
PD0	61	ADC7	
PD1	62	ADC6	
PD2	63	ADC5	
PD3	64	ADC4	

Table 8-2. GPIO Pins and Alternate Functions (64LQFP) *(continued)*

IO	Pin Number	Multiplexed Function	Multiplexed Function
PE0	6	ADC3	
PE1	5	ADC2	
PE2	2	ADC1	
PE3	1	ADC0	
PE4	8		

Table 8-3. GPIO Signals (64LQFP)

Pin Name	Pin Number	Pin Type	Buffer Type[a]	Description
PA0	17	I/O	TTL	GPIO port A bit 0.
PA1	18	I/O	TTL	GPIO port A bit 1.
PA2	19	I/O	TTL	GPIO port A bit 2.
PA3	20	I/O	TTL	GPIO port A bit 3.
PA4	21	I/O	TTL	GPIO port A bit 4.
PA5	22	I/O	TTL	GPIO port A bit 5.
PA6	25	I/O	TTL	GPIO port A bit 6.
PA7	26	I/O	TTL	GPIO port A bit 7.
PB0	41	I/O	TTL	GPIO port B bit 0.
PB1	42	I/O	TTL	GPIO port B bit 1.
PB2	47	I/O	TTL	GPIO port B bit 2.
PB3	27	I/O	TTL	GPIO port B bit 3.
PB4	58	I/O	TTL	GPIO port B bit 4.
PB5	57	I/O	TTL	GPIO port B bit 5.
PB6	56	I/O	TTL	GPIO port B bit 6.
PB7	55	I/O	TTL	GPIO port B bit 7.
PC0	52	I/O	TTL	GPIO port C bit 0.
PC1	51	I/O	TTL	GPIO port C bit 1.
PC2	50	I/O	TTL	GPIO port C bit 2.
PC3	49	I/O	TTL	GPIO port C bit 3.
PC4	11	I/O	TTL	GPIO port C bit 4.
PC5	14	I/O	TTL	GPIO port C bit 5.
PC6	15	I/O	TTL	GPIO port C bit 6.
PC7	16	I/O	TTL	GPIO port C bit 7.
PD0	61	I/O	TTL	GPIO port D bit 0.
PD1	62	I/O	TTL	GPIO port D bit 1.
PD2	63	I/O	TTL	GPIO port D bit 2.
PD3	64	I/O	TTL	GPIO port D bit 3.
PE0	6	I/O	TTL	GPIO port E bit 0.
PE1	5	I/O	TTL	GPIO port E bit 1.
PE2	2	I/O	TTL	GPIO port E bit 2.
PE3	1	I/O	TTL	GPIO port E bit 3.

Table 8-3. GPIO Signals (64LQFP) ***(continued)***

Pin Name	Pin Number	Pin Type	Buffer Type[a]	Description
PE4	8	I/O	TTL	GPIO port E bit 4.

a. The TTL designation indicates the pin has TTL-compatible voltage levels.

8.2 Functional Description

Important: All GPIO pins are tri-stated by default (**GPIOAFSEL**=0, **GPIODEN**=0, **GPIOPDR**=0, and **GPIOPUR**=0), with the exception of the four JTAG/SWD pins (`PC[3:0]`). The JTAG/SWD pins default to their JTAG/SWD functionality (**GPIOAFSEL**=1, **GPIODEN=1** and **GPIOPUR**=1). A Power-On-Reset (`POR`) or asserting `RST` puts both groups of pins back to their default state.

Each GPIO port is a separate hardware instantiation of the same physical block(see Figure 8-1 on page 327 and Figure 8-2 on page 328). The LM3S2678 microcontroller contains five ports and thus five of these physical GPIO blocks.

Figure 8-1. Digital I/O Pads

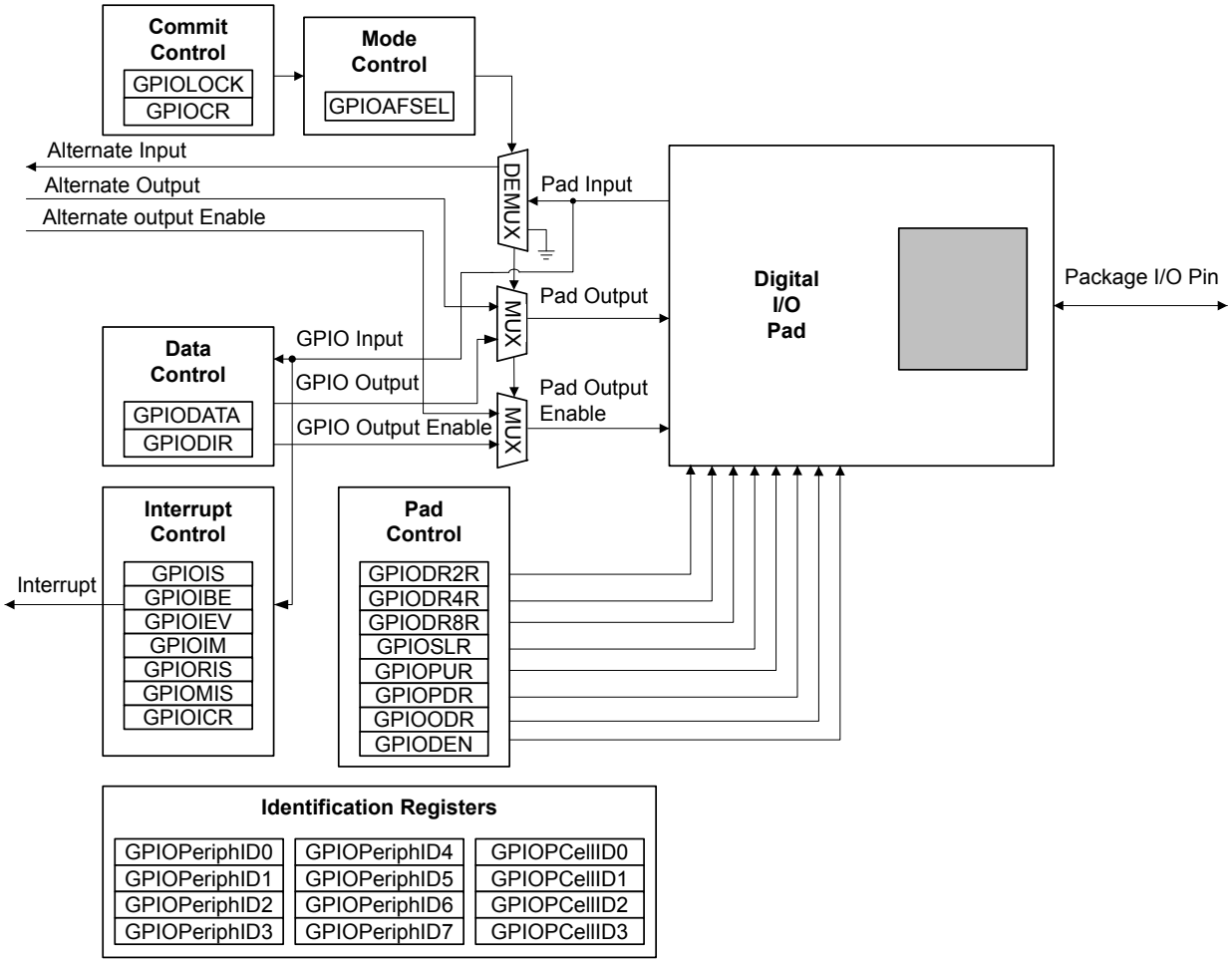

Figure 8-2. Analog/Digital I/O Pads

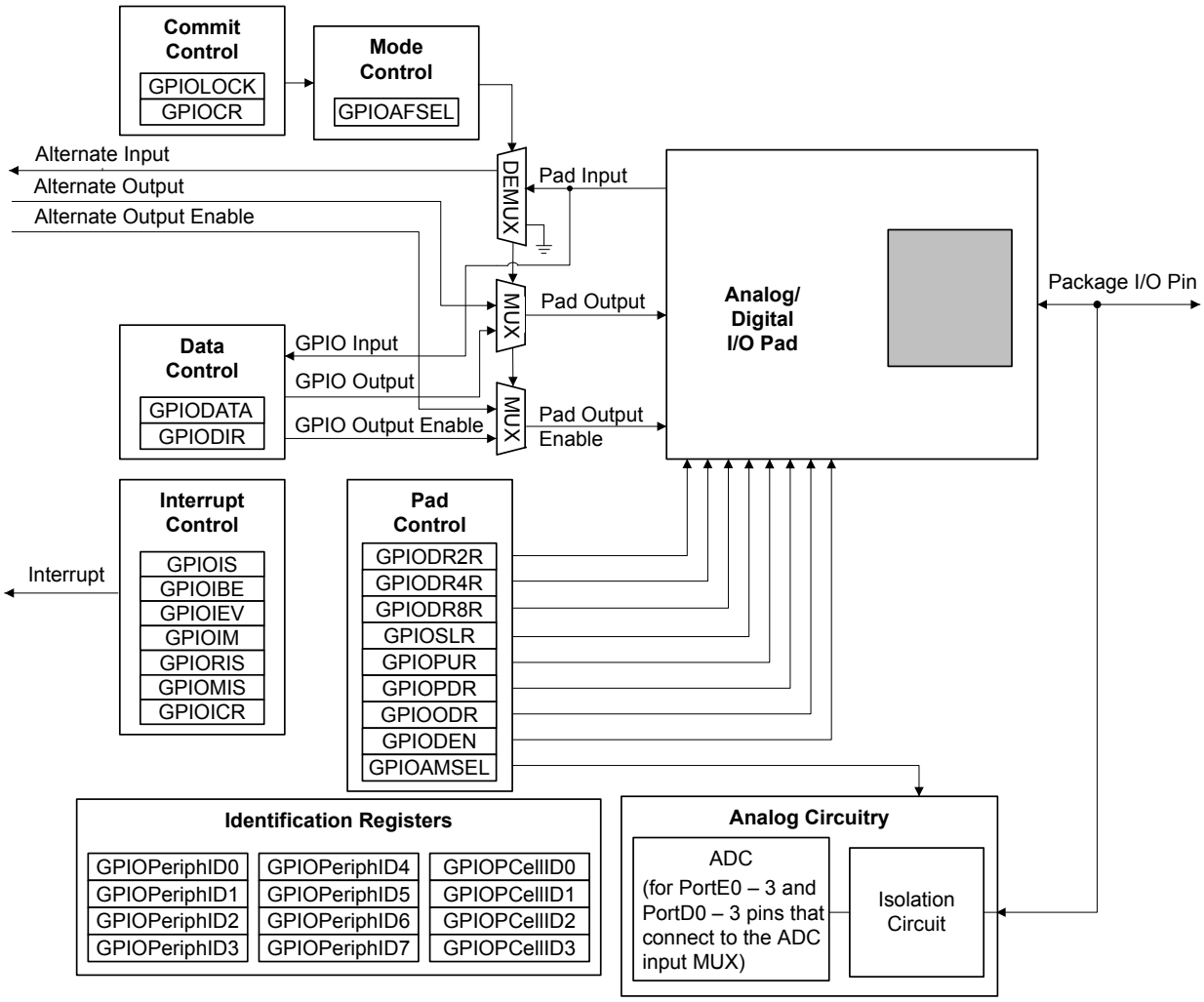

8.2.1 Data Control

The data control registers allow software to configure the operational modes of the GPIOs. The data direction register configures the GPIO as an input or an output while the data register either captures incoming data or drives it out to the pads.

8.2.1.1 Data Direction Operation

The **GPIO Direction (GPIODIR)** register (see page 336) is used to configure each individual pin as an input or output. When the data direction bit is set to 0, the GPIO is configured as an input and the corresponding data register bit will capture and store the value on the GPIO port. When the data direction bit is set to 1, the GPIO is configured as an output and the corresponding data register bit will be driven out on the GPIO port.

8.2.1.2 Data Register Operation

To aid in the efficiency of software, the GPIO ports allow for the modification of individual bits in the **GPIO Data (GPIODATA)** register (see page 335) by using bits [9:2] of the address bus as a mask. This allows software drivers to modify individual GPIO pins in a single instruction, without affecting

the state of the other pins. This is in contrast to the "typical" method of doing a read-modify-write operation to set or clear an individual GPIO pin. To accommodate this feature, the **GPIODATA** register covers 256 locations in the memory map.

During a write, if the address bit associated with that data bit is set to 1, the value of the **GPIODATA** register is altered. If it is cleared to 0, it is left unchanged.

For example, writing a value of 0xEB to the address GPIODATA + 0x098 would yield as shown in Figure 8-3 on page 329, where u is data unchanged by the write.

Figure 8-3. GPIODATA Write Example

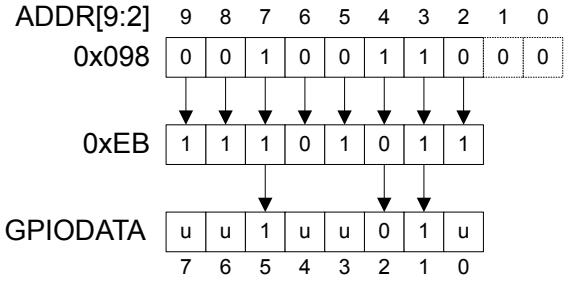

During a read, if the address bit associated with the data bit is set to 1, the value is read. If the address bit associated with the data bit is set to 0, it is read as a zero, regardless of its actual value. For example, reading address GPIODATA + 0x0C4 yields as shown in Figure 8-4 on page 329.

Figure 8-4. GPIODATA Read Example

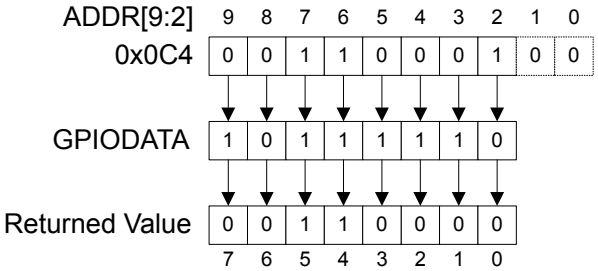

8.2.2 Interrupt Control

The interrupt capabilities of each GPIO port are controlled by a set of seven registers. With these registers, it is possible to select the source of the interrupt, its polarity, and the edge properties. When one or more GPIO inputs cause an interrupt, a single interrupt output is sent to the interrupt controller for the entire GPIO port. For edge-triggered interrupts, software must clear the interrupt to enable any further interrupts. For a level-sensitive interrupt, it is assumed that the external source holds the level constant for the interrupt to be recognized by the controller.

Three registers are required to define the edge or sense that causes interrupts:

- **GPIO Interrupt Sense (GPIOIS)** register (see page 337)
- **GPIO Interrupt Both Edges (GPIOIBE)** register (see page 338)
- **GPIO Interrupt Event (GPIOIEV)** register (see page 339)

Interrupts are enabled/disabled via the **GPIO Interrupt Mask (GPIOIM)** register (see page 340).

When an interrupt condition occurs, the state of the interrupt signal can be viewed in two locations: the **GPIO Raw Interrupt Status (GPIORIS)** and **GPIO Masked Interrupt Status (GPIOMIS)** registers (see page 341 and page 342). As the name implies, the **GPIOMIS** register only shows interrupt conditions that are allowed to be passed to the controller. The **GPIORIS** register indicates that a GPIO pin meets the conditions for an interrupt, but has not necessarily been sent to the controller.

In addition to providing GPIO functionality, `PB4` can also be used as an external trigger for the ADC. If PB4 is configured as a non-masked interrupt pin (the appropriate bit of `GPIOIM` is set to 1), not only is an interrupt for PortB generated, but an external trigger signal is sent to the ADC. If the **ADC Event Multiplexer Select (ADCEMUX)** register is configured to use the external trigger, an ADC conversion is initiated.

If no other PortB pins are being used to generate interrupts, the **Interrupt 0-31 Set Enable (EN0)** register can disable the PortB interrupts, and the ADC interrupt can be used to read back the converted data. Otherwise, the PortB interrupt handler needs to ignore and clear interrupts on PB4, and wait for the ADC interrupt or the ADC interrupt must be disabled in the **EN0** register and the PortB interrupt handler must poll the ADC registers until the conversion is completed. See page 106 for more information.

Interrupts are cleared by writing a 1 to the appropriate bit of the **GPIO Interrupt Clear (GPIOICR)** register (see page 343).

When programming the following interrupt control registers, the interrupts should be masked (**GPIOIM** set to 0). Writing any value to an interrupt control register (**GPIOIS**, **GPIOIBE**, or **GPIOIEV**) can generate a spurious interrupt if the corresponding bits are enabled.

8.2.3 Mode Control

The GPIO pins can be controlled by either hardware or software. When hardware control is enabled via the **GPIO Alternate Function Select (GPIOAFSEL)** register (see page 344), the pin state is controlled by its alternate function (that is, the peripheral). Software control corresponds to GPIO mode, where the **GPIODATA** register is used to read/write the corresponding pins.

Note: If any pin is to be used as an ADC input, the appropriate bit in **GPIOAMSEL** must be written to 1 to disable the analog isolation circuit.

8.2.4 Commit Control

The GPIO commit control registers provide a layer of protection against accidental programming of critical hardware peripherals. Protection is currently provided for the `NMI` pin (`PB7`) and the four JTAG/SWD pins (`PC[3:0]`). Writes to protected bits of the **GPIO Alternate Function Select (GPIOAFSEL)** register (see page 344), **GPIO Pull-Up Select (GPIOPUR)** register (see page 350), and **GPIO Digital Enable (GPIODEN)** register (see page 354) are not committed to storage unless the **GPIO Lock (GPIOLOCK)** register (see page 356) has been unlocked and the appropriate bits of the **GPIO Commit (GPIOCR)** register (see page 357) have been set to 1.

8.2.5 Pad Control

The pad control registers allow for GPIO pad configuration by software based on the application requirements. The pad control registers include the **GPIODR2R**, **GPIODR4R**, **GPIODR8R**, **GPIOODR**, **GPIOPUR**, **GPIOPDR**, **GPIOSLR**, and **GPIODEN** registers. These registers control drive strength, open-drain configuration, pull-up and pull-down resistors, slew-rate control and digital enable.

For special high-current applications, the GPIO output buffers may be used with the following restrictions. With the GPIO pins configured as 8-mA output drivers, a total of four GPIO outputs may be used to sink current loads up to 18 mA each. At 18-mA sink current loading, the V_{OL} value is specified as 1.2 V. The high-current GPIO package pins must be selected such that there are only

a maximum of two per side of the physical package with the total number of high-current GPIO outputs not exceeding four for the entire package.

8.2.6 Identification

The identification registers configured at reset allow software to detect and identify the module as a GPIO block. The identification registers include the **GPIOPeriphID0**-**GPIOPeriphID7** registers as well as the **GPIOPCellID0**-**GPIOPCellID3** registers.

8.3 Initialization and Configuration

The GPIO modules may be accessed via two different memory apertures. The legacy aperture, the Advanced Peripheral Bus (APB), is backwards-compatible with previous Stellaris® parts. The other aperture, the Advanced High-Performance Bus (AHB), offers the same register map but provides better back-to-back access performance than the APB bus. These apertures are mutually exclusive. The aperture enabled for a given GPIO port is controlled by the appropriate bit in the **GPIOHBCTL** register (see page 194).

To use the GPIO, the peripheral clock must be enabled by setting the appropriate GPIO Port bit field (`GPIOn`) in the **RCGC2** register.

On reset, all GPIO pins (except for the four JTAG pins) are configured out of reset to be undriven (tristate): **GPIOAFSEL**=0, **GPIODEN**=0, **GPIOPDR**=0, and **GPIOPUR**=0. Table 8-4 on page 331 shows all possible configurations of the GPIO pads and the control register settings required to achieve them. Table 8-5 on page 332 shows how a rising edge interrupt would be configured for pin 2 of a GPIO port.

Table 8-4. GPIO Pad Configuration Examples

Configuration	GPIO Register Bit Value[a]									
	AFSEL	DIR	ODR	DEN	PUR	PDR	DR2R	DR4R	DR8R	SLR
Digital Input (GPIO)	0	0	0	1	?	?	X	X	X	X
Digital Output (GPIO)	0	1	0	1	?	?	?	?	?	?
Open Drain Output (GPIO)	0	1	1	1	X	X	?	?	?	?
Digital Input (Timer CCP)	1	X	0	1	?	?	X	X	X	X
Digital Input (QEI)	1	X	0	1	?	?	X	X	X	X
Digital Output (PWM)	1	X	0	1	?	?	?	?	?	?
Digital Output (Timer PWM)	1	X	0	1	?	?	?	?	?	?
Digital Input/Output (SSI)	1	X	0	1	?	?	?	?	?	?
Digital Input/Output (UART)	1	X	0	1	?	?	?	?	?	?

a. X=Ignored (don’t care bit)

?=Can be either 0 or 1, depending on the configuration

Table 8-5. GPIO Interrupt Configuration Example

Register	Desired Interrupt Event Trigger	Pin 2 Bit Value[a]							
		7	6	5	4	3	2	1	0
GPIOIS	0=edge 1=level	X	X	X	X	X	0	X	X
GPIOIBE	0=single edge 1=both edges	X	X	X	X	X	0	X	X
GPIOIEV	0=Low level, or negative edge 1=High level, or positive edge	X	X	X	X	X	1	X	X
GPIOIM	0=masked 1=not masked	0	0	0	0	0	1	0	0

a. X=Ignored (don't care bit)

8.4 Register Map

Table 8-6 on page 333 lists the GPIO registers. Each GPIO port can be accessed through one of two bus apertures. The legacy aperture, the Advanced Peripheral Bus (APB), is backwards-compatible with previous Stellaris parts. The other aperture, the Advanced High-Performance Bus (AHB), offers the same register map but provides better back-to-back access performance than the APB bus. The offset listed is a hexadecimal increment to the register's address, relative to that GPIO port's base address:

- GPIO Port A (APB): 0x4000.4000
- GPIO Port A (AHB): 0x4005.8000
- GPIO Port B (APB): 0x4000.5000
- GPIO Port B (AHB): 0x4005.9000
- GPIO Port C (APB): 0x4000.6000
- GPIO Port C (AHB): 0x4005.A000
- GPIO Port D (APB): 0x4000.7000
- GPIO Port D (AHB): 0x4005.B000
- GPIO Port E (APB): 0x4002.4000
- GPIO Port E (AHB): 0x4005.C000

Note that the GPIO module clock must be enabled before the registers can be programmed (see page 224). There must be a delay of 3 system clocks after the GPIO module clock is enabled before any GPIO module registers are accessed.

Important: The GPIO registers in this chapter are duplicated in each GPIO block; however, depending on the block, all eight bits may not be connected to a GPIO pad. In those cases, writing to those unconnected bits has no effect, and reading those unconnected bits returns no meaningful data.

Note: The default reset value for the **GPIOAFSEL**, **GPIOPUR**, and **GPIODEN** registers are 0x0000.0000 for all GPIO pins, with the exception of the four JTAG/SWD pins (`PC[3:0]`).

These four pins default to JTAG/SWD functionality. Because of this, the default reset value of these registers for Port C is 0x0000.000F.

The default register type for the **GPIOCR** register is RO for all GPIO pins with the exception of the `NMI` pin and the four JTAG/SWD pins (`PB7` and `PC[3:0]`). These five pins are currently the only GPIOs that are protected by the **GPIOCR** register. Because of this, the register type for GPIO Port B7 and GPIO Port C[3:0] is R/W.

The default reset value for the **GPIOCR** register is 0x0000.00FF for all GPIO pins, with the exception of the `NMI` pin and the four JTAG/SWD pins (`PB7` and `PC[3:0]`). To ensure that the JTAG port is not accidentally programmed as a GPIO, these four pins default to non-committable. To ensure that the `NMI` pin is not accidentally programmed as the non-maskable interrupt pin, it defaults to non-committable. Because of this, the default reset value of **GPIOCR** for GPIO Port B is 0x0000.007F while the default reset value of GPIOCR for Port C is 0x0000.00F0.

Table 8-6. GPIO Register Map

Offset	Name	Type	Reset	Description	See page
0x000	GPIODATA	R/W	0x0000.0000	GPIO Data	335
0x400	GPIODIR	R/W	0x0000.0000	GPIO Direction	336
0x404	GPIOIS	R/W	0x0000.0000	GPIO Interrupt Sense	337
0x408	GPIOIBE	R/W	0x0000.0000	GPIO Interrupt Both Edges	338
0x40C	GPIOIEV	R/W	0x0000.0000	GPIO Interrupt Event	339
0x410	GPIOIM	R/W	0x0000.0000	GPIO Interrupt Mask	340
0x414	GPIORIS	RO	0x0000.0000	GPIO Raw Interrupt Status	341
0x418	GPIOMIS	RO	0x0000.0000	GPIO Masked Interrupt Status	342
0x41C	GPIOICR	W1C	0x0000.0000	GPIO Interrupt Clear	343
0x420	GPIOAFSEL	R/W	-	GPIO Alternate Function Select	344
0x500	GPIODR2R	R/W	0x0000.00FF	GPIO 2-mA Drive Select	346
0x504	GPIODR4R	R/W	0x0000.0000	GPIO 4-mA Drive Select	347
0x508	GPIODR8R	R/W	0x0000.0000	GPIO 8-mA Drive Select	348
0x50C	GPIOODR	R/W	0x0000.0000	GPIO Open Drain Select	349
0x510	GPIOPUR	R/W	-	GPIO Pull-Up Select	350
0x514	GPIOPDR	R/W	0x0000.0000	GPIO Pull-Down Select	352
0x518	GPIOSLR	R/W	0x0000.0000	GPIO Slew Rate Control Select	353
0x51C	GPIODEN	R/W	-	GPIO Digital Enable	354
0x520	GPIOLOCK	R/W	0x0000.0001	GPIO Lock	356
0x524	GPIOCR	-	-	GPIO Commit	357
0x528	GPIOAMSEL	R/W	0x0000.0000	GPIO Analog Mode Select	359
0xFD0	GPIOPeriphID4	RO	0x0000.0000	GPIO Peripheral Identification 4	360

Table 8-6. GPIO Register Map *(continued)*

Offset	Name	Type	Reset	Description	See page
0xFD4	GPIOPeriphID5	RO	0x0000.0000	GPIO Peripheral Identification 5	361
0xFD8	GPIOPeriphID6	RO	0x0000.0000	GPIO Peripheral Identification 6	362
0xFDC	GPIOPeriphID7	RO	0x0000.0000	GPIO Peripheral Identification 7	363
0xFE0	GPIOPeriphID0	RO	0x0000.0061	GPIO Peripheral Identification 0	364
0xFE4	GPIOPeriphID1	RO	0x0000.0000	GPIO Peripheral Identification 1	365
0xFE8	GPIOPeriphID2	RO	0x0000.0018	GPIO Peripheral Identification 2	366
0xFEC	GPIOPeriphID3	RO	0x0000.0001	GPIO Peripheral Identification 3	367
0xFF0	GPIOPCellID0	RO	0x0000.000D	GPIO PrimeCell Identification 0	368
0xFF4	GPIOPCellID1	RO	0x0000.00F0	GPIO PrimeCell Identification 1	369
0xFF8	GPIOPCellID2	RO	0x0000.0005	GPIO PrimeCell Identification 2	370
0xFFC	GPIOPCellID3	RO	0x0000.00B1	GPIO PrimeCell Identification 3	371

8.5 Register Descriptions

The remainder of this section lists and describes the GPIO registers, in numerical order by address offset.

Register 1: GPIO Data (GPIODATA), offset 0x000

The **GPIODATA** register is the data register. In software control mode, values written in the **GPIODATA** register are transferred onto the GPIO port pins if the respective pins have been configured as outputs through the **GPIO Direction (GPIODIR)** register (see page 336).

In order to write to **GPIODATA**, the corresponding bits in the mask, resulting from the address bus bits [9:2], must be High. Otherwise, the bit values remain unchanged by the write.

Similarly, the values read from this register are determined for each bit by the mask bit derived from the address used to access the data register, bits [9:2]. Bits that are 1 in the address mask cause the corresponding bits in **GPIODATA** to be read, and bits that are 0 in the address mask cause the corresponding bits in **GPIODATA** to be read as 0, regardless of their value.

A read from **GPIODATA** returns the last bit value written if the respective pins are configured as outputs, or it returns the value on the corresponding input pin when these are configured as inputs. All bits are cleared by a reset.

GPIO Data (GPIODATA)

GPIO Port A (APB) base: 0x4000.4000
GPIO Port A (AHB) base: 0x4005.8000
GPIO Port B (APB) base: 0x4000.5000
GPIO Port B (AHB) base: 0x4005.9000
GPIO Port C (APB) base: 0x4000.6000
GPIO Port C (AHB) base: 0x4005.A000
GPIO Port D (APB) base: 0x4000.7000
GPIO Port D (AHB) base: 0x4005.B000
GPIO Port E (APB) base: 0x4002.4000
GPIO Port E (AHB) base: 0x4005.C000
Offset 0x000
Type R/W, reset 0x0000.0000

	31	30	29	28	27	26	25	24	23	22	21	20	19	18	17	16
	reserved															
Type	RO	RO	RO	RO	RO	RO	RO	RO	RO	RO	RO	RO	RO	RO	RO	RO
Reset	0	0	0	0	0	0	0	0	0	0	0	0	0	0	0	0

	15	14	13	12	11	10	9	8	7	6	5	4	3	2	1	0
	reserved								DATA							
Type	RO	RO	RO	RO	RO	RO	RO	RO	R/W	R/W	R/W	R/W	R/W	R/W	R/W	R/W
Reset	0	0	0	0	0	0	0	0	0	0	0	0	0	0	0	0

Bit/Field	Name	Type	Reset	Description
31:8	reserved	RO	0x00	Software should not rely on the value of a reserved bit. To provide compatibility with future products, the value of a reserved bit should be preserved across a read-modify-write operation.
7:0	DATA	R/W	0x00	GPIO Data This register is virtually mapped to 256 locations in the address space. To facilitate the reading and writing of data to these registers by independent drivers, the data read from and the data written to the registers are masked by the eight address lines `ipaddr[9:2]`. Reads from this register return its current state. Writes to this register only affect bits that are not masked by `ipaddr[9:2]` and are configured as outputs. See “Data Register Operation” on page 328 for examples of reads and writes.

Register 2: GPIO Direction (GPIODIR), offset 0x400

The **GPIODIR** register is the data direction register. Bits set to 1 in the **GPIODIR** register configure the corresponding pin to be an output, while bits set to 0 configure the pins to be inputs. All bits are cleared by a reset, meaning all GPIO pins are inputs by default.

GPIO Direction (GPIODIR)

GPIO Port A (APB) base: 0x4000.4000
GPIO Port A (AHB) base: 0x4005.8000
GPIO Port B (APB) base: 0x4000.5000
GPIO Port B (AHB) base: 0x4005.9000
GPIO Port C (APB) base: 0x4000.6000
GPIO Port C (AHB) base: 0x4005.A000
GPIO Port D (APB) base: 0x4000.7000
GPIO Port D (AHB) base: 0x4005.B000
GPIO Port E (APB) base: 0x4002.4000
GPIO Port E (AHB) base: 0x4005.C000
Offset 0x400
Type R/W, reset 0x0000.0000

	31	30	29	28	27	26	25	24	23	22	21	20	19	18	17	16
	reserved															
Type	RO	RO	RO	RO	RO	RO	RO	RO	RO	RO	RO	RO	RO	RO	RO	RO
Reset	0	0	0	0	0	0	0	0	0	0	0	0	0	0	0	0

	15	14	13	12	11	10	9	8	7	6	5	4	3	2	1	0
	reserved								DIR							
Type	RO	RO	RO	RO	RO	RO	RO	RO	R/W	R/W	R/W	R/W	R/W	R/W	R/W	R/W
Reset	0	0	0	0	0	0	0	0	0	0	0	0	0	0	0	0

Bit/Field	Name	Type	Reset	Description
31:8	reserved	RO	0x00	Software should not rely on the value of a reserved bit. To provide compatibility with future products, the value of a reserved bit should be preserved across a read-modify-write operation.
7:0	DIR	R/W	0x00	GPIO Data Direction The `DIR` values are defined as follows: Value Description 0 Pins are inputs. 1 Pins are outputs.

Register 3: GPIO Interrupt Sense (GPIOIS), offset 0x404

The **GPIOIS** register is the interrupt sense register. Bits set to 1 in **GPIOIS** configure the corresponding pins to detect levels, while bits set to 0 configure the pins to detect edges. All bits are cleared by a reset.

GPIO Interrupt Sense (GPIOIS)

GPIO Port A (APB) base: 0x4000.4000
GPIO Port A (AHB) base: 0x4005.8000
GPIO Port B (APB) base: 0x4000.5000
GPIO Port B (AHB) base: 0x4005.9000
GPIO Port C (APB) base: 0x4000.6000
GPIO Port C (AHB) base: 0x4005.A000
GPIO Port D (APB) base: 0x4000.7000
GPIO Port D (AHB) base: 0x4005.B000
GPIO Port E (APB) base: 0x4002.4000
GPIO Port E (AHB) base: 0x4005.C000
Offset 0x404
Type R/W, reset 0x0000.0000

	31	30	29	28	27	26	25	24	23	22	21	20	19	18	17	16
	reserved															
Type	RO	RO	RO	RO	RO	RO	RO	RO	RO	RO	RO	RO	RO	RO	RO	RO
Reset	0	0	0	0	0	0	0	0	0	0	0	0	0	0	0	0

	15	14	13	12	11	10	9	8	7	6	5	4	3	2	1	0
	reserved								IS							
Type	RO	RO	RO	RO	RO	RO	RO	RO	R/W	R/W	R/W	R/W	R/W	R/W	R/W	R/W
Reset	0	0	0	0	0	0	0	0	0	0	0	0	0	0	0	0

Bit/Field	Name	Type	Reset	Description
31:8	reserved	RO	0x00	Software should not rely on the value of a reserved bit. To provide compatibility with future products, the value of a reserved bit should be preserved across a read-modify-write operation.
7:0	IS	R/W	0x00	GPIO Interrupt Sense The `IS` values are defined as follows: Value Description 0 Edge on corresponding pin is detected (edge-sensitive). 1 Level on corresponding pin is detected (level-sensitive).

Register 4: GPIO Interrupt Both Edges (GPIOIBE), offset 0x408

The **GPIOIBE** register is the interrupt both-edges register. When the corresponding bit in the **GPIO Interrupt Sense (GPIOIS)** register (see page 337) is set to detect edges, bits set to High in **GPIOIBE** configure the corresponding pin to detect both rising and falling edges, regardless of the corresponding bit in the **GPIO Interrupt Event (GPIOIEV)** register (see page 339). Clearing a bit configures the pin to be controlled by **GPIOIEV**. All bits are cleared by a reset.

GPIO Interrupt Both Edges (GPIOIBE)

GPIO Port A (APB) base: 0x4000.4000
GPIO Port A (AHB) base: 0x4005.8000
GPIO Port B (APB) base: 0x4000.5000
GPIO Port B (AHB) base: 0x4005.9000
GPIO Port C (APB) base: 0x4000.6000
GPIO Port C (AHB) base: 0x4005.A000
GPIO Port D (APB) base: 0x4000.7000
GPIO Port D (AHB) base: 0x4005.B000
GPIO Port E (APB) base: 0x4002.4000
GPIO Port E (AHB) base: 0x4005.C000
Offset 0x408
Type R/W, reset 0x0000.0000

	31	30	29	28	27	26	25	24	23	22	21	20	19	18	17	16
	reserved															
Type	RO	RO	RO	RO	RO	RO	RO	RO	RO	RO	RO	RO	RO	RO	RO	RO
Reset	0	0	0	0	0	0	0	0	0	0	0	0	0	0	0	0

	15	14	13	12	11	10	9	8	7	6	5	4	3	2	1	0
	reserved								IBE							
Type	RO	RO	RO	RO	RO	RO	RO	RO	R/W	R/W	R/W	R/W	R/W	R/W	R/W	R/W
Reset	0	0	0	0	0	0	0	0	0	0	0	0	0	0	0	0

Bit/Field	Name	Type	Reset	Description
31:8	reserved	RO	0x00	Software should not rely on the value of a reserved bit. To provide compatibility with future products, the value of a reserved bit should be preserved across a read-modify-write operation.
7:0	IBE	R/W	0x00	GPIO Interrupt Both Edges The `IBE` values are defined as follows: Value Description 0 Interrupt generation is controlled by the **GPIO Interrupt Event (GPIOIEV)** register (see page 339). 1 Both edges on the corresponding pin trigger an interrupt. **Note:** Single edge is determined by the corresponding bit in **GPIOIEV**.

Register 5: GPIO Interrupt Event (GPIOIEV), offset 0x40C

The **GPIOIEV** register is the interrupt event register. Bits set to High in **GPIOIEV** configure the corresponding pin to detect rising edges or high levels, depending on the corresponding bit value in the **GPIO Interrupt Sense (GPIOIS)** register (see page 337). Clearing a bit configures the pin to detect falling edges or low levels, depending on the corresponding bit value in **GPIOIS**. All bits are cleared by a reset.

GPIO Interrupt Event (GPIOIEV)

GPIO Port A (APB) base: 0x4000.4000
GPIO Port A (AHB) base: 0x4005.8000
GPIO Port B (APB) base: 0x4000.5000
GPIO Port B (AHB) base: 0x4005.9000
GPIO Port C (APB) base: 0x4000.6000
GPIO Port C (AHB) base: 0x4005.A000
GPIO Port D (APB) base: 0x4000.7000
GPIO Port D (AHB) base: 0x4005.B000
GPIO Port E (APB) base: 0x4002.4000
GPIO Port E (AHB) base: 0x4005.C000
Offset 0x40C
Type R/W, reset 0x0000.0000

	31	30	29	28	27	26	25	24	23	22	21	20	19	18	17	16
	reserved															
Type	RO	RO	RO	RO	RO	RO	RO	RO	RO	RO	RO	RO	RO	RO	RO	RO
Reset	0	0	0	0	0	0	0	0	0	0	0	0	0	0	0	0

	15	14	13	12	11	10	9	8	7	6	5	4	3	2	1	0
	reserved								IEV							
Type	RO	RO	RO	RO	RO	RO	RO	RO	R/W	R/W	R/W	R/W	R/W	R/W	R/W	R/W
Reset	0	0	0	0	0	0	0	0	0	0	0	0	0	0	0	0

Bit/Field	Name	Type	Reset	Description
31:8	reserved	RO	0x00	Software should not rely on the value of a reserved bit. To provide compatibility with future products, the value of a reserved bit should be preserved across a read-modify-write operation.
7:0	IEV	R/W	0x00	GPIO Interrupt Event The `IEV` values are defined as follows: Value Description 0 Falling edge or Low levels on corresponding pins trigger interrupts. 1 Rising edge or High levels on corresponding pins trigger interrupts.

Register 6: GPIO Interrupt Mask (GPIOIM), offset 0x410

The **GPIOIM** register is the interrupt mask register. Bits set to High in **GPIOIM** allow the corresponding pins to trigger their individual interrupts and the combined **GPIOINTR** line. Clearing a bit disables interrupt triggering on that pin. All bits are cleared by a reset.

GPIO Interrupt Mask (GPIOIM)

GPIO Port A (APB) base: 0x4000.4000
GPIO Port A (AHB) base: 0x4005.8000
GPIO Port B (APB) base: 0x4000.5000
GPIO Port B (AHB) base: 0x4005.9000
GPIO Port C (APB) base: 0x4000.6000
GPIO Port C (AHB) base: 0x4005.A000
GPIO Port D (APB) base: 0x4000.7000
GPIO Port D (AHB) base: 0x4005.B000
GPIO Port E (APB) base: 0x4002.4000
GPIO Port E (AHB) base: 0x4005.C000
Offset 0x410
Type R/W, reset 0x0000.0000

	31	30	29	28	27	26	25	24	23	22	21	20	19	18	17	16
	reserved															
Type	RO	RO	RO	RO	RO	RO	RO	RO	RO	RO	RO	RO	RO	RO	RO	RO
Reset	0	0	0	0	0	0	0	0	0	0	0	0	0	0	0	0

	15	14	13	12	11	10	9	8	7	6	5	4	3	2	1	0
	reserved								IME							
Type	RO	RO	RO	RO	RO	RO	RO	RO	R/W	R/W	R/W	R/W	R/W	R/W	R/W	R/W
Reset	0	0	0	0	0	0	0	0	0	0	0	0	0	0	0	0

Bit/Field	Name	Type	Reset	Description
31:8	reserved	RO	0x00	Software should not rely on the value of a reserved bit. To provide compatibility with future products, the value of a reserved bit should be preserved across a read-modify-write operation.
7:0	IME	R/W	0x00	GPIO Interrupt Mask Enable The `IME` values are defined as follows: Value Description 0 Corresponding pin interrupt is masked. 1 Corresponding pin interrupt is not masked.

Register 7: GPIO Raw Interrupt Status (GPIORIS), offset 0x414

The **GPIORIS** register is the raw interrupt status register. Bits read High in **GPIORIS** reflect the status of interrupt trigger conditions detected (raw, prior to masking), indicating that all the requirements have been met, before they are finally allowed to trigger by the **GPIO Interrupt Mask (GPIOIM)** register (see page 340). Bits read as zero indicate that corresponding input pins have not initiated an interrupt. All bits are cleared by a reset.

GPIO Raw Interrupt Status (GPIORIS)

GPIO Port A (APB) base: 0x4000.4000
GPIO Port A (AHB) base: 0x4005.8000
GPIO Port B (APB) base: 0x4000.5000
GPIO Port B (AHB) base: 0x4005.9000
GPIO Port C (APB) base: 0x4000.6000
GPIO Port C (AHB) base: 0x4005.A000
GPIO Port D (APB) base: 0x4000.7000
GPIO Port D (AHB) base: 0x4005.B000
GPIO Port E (APB) base: 0x4002.4000
GPIO Port E (AHB) base: 0x4005.C000
Offset 0x414
Type RO, reset 0x0000.0000

	31	30	29	28	27	26	25	24	23	22	21	20	19	18	17	16
	reserved															
Type	RO	RO	RO	RO	RO	RO	RO	RO	RO	RO	RO	RO	RO	RO	RO	RO
Reset	0	0	0	0	0	0	0	0	0	0	0	0	0	0	0	0

	15	14	13	12	11	10	9	8	7	6	5	4	3	2	1	0
	reserved								RIS							
Type	RO	RO	RO	RO	RO	RO	RO	RO	RO	RO	RO	RO	RO	RO	RO	RO
Reset	0	0	0	0	0	0	0	0	0	0	0	0	0	0	0	0

Bit/Field	Name	Type	Reset	Description
31:8	reserved	RO	0x00	Software should not rely on the value of a reserved bit. To provide compatibility with future products, the value of a reserved bit should be preserved across a read-modify-write operation.
7:0	RIS	RO	0x00	GPIO Interrupt Raw Status Reflects the status of interrupt trigger condition detection on pins (raw, prior to masking). The `RIS` values are defined as follows: Value Description 0 Corresponding pin interrupt requirements not met. 1 Corresponding pin interrupt has met requirements.

Register 8: GPIO Masked Interrupt Status (GPIOMIS), offset 0x418

The **GPIOMIS** register is the masked interrupt status register. Bits read High in **GPIOMIS** reflect the status of input lines triggering an interrupt. Bits read as Low indicate that either no interrupt has been generated, or the interrupt is masked.

In addition to providing GPIO functionality, `PB4` can also be used as an external trigger for the ADC. If PB4 is configured as a non-masked interrupt pin (the appropriate bit of `GPIOIM` is set to 1), not only is an interrupt for PortB generated, but an external trigger signal is sent to the ADC. If the **ADC Event Multiplexer Select (ADCEMUX)** register is configured to use the external trigger, an ADC conversion is initiated.

If no other PortB pins are being used to generate interrupts, the **Interrupt 0-31 Set Enable (EN0)** register can disable the PortB interrupts, and the ADC interrupt can be used to read back the converted data. Otherwise, the PortB interrupt handler needs to ignore and clear interrupts on PB4, and wait for the ADC interrupt or the ADC interrupt must be disabled in the **EN0** register and the PortB interrupt handler must poll the ADC registers until the conversion is completed. See page 106 for more information.

GPIOMIS is the state of the interrupt after masking.

GPIO Masked Interrupt Status (GPIOMIS)

GPIO Port A (APB) base: 0x4000.4000
GPIO Port A (AHB) base: 0x4005.8000
GPIO Port B (APB) base: 0x4000.5000
GPIO Port B (AHB) base: 0x4005.9000
GPIO Port C (APB) base: 0x4000.6000
GPIO Port C (AHB) base: 0x4005.A000
GPIO Port D (APB) base: 0x4000.7000
GPIO Port D (AHB) base: 0x4005.B000
GPIO Port E (APB) base: 0x4002.4000
GPIO Port E (AHB) base: 0x4005.C000
Offset 0x418
Type RO, reset 0x0000.0000

	31	30	29	28	27	26	25	24	23	22	21	20	19	18	17	16
	reserved															
Type	RO	RO	RO	RO	RO	RO	RO	RO	RO	RO	RO	RO	RO	RO	RO	RO
Reset	0	0	0	0	0	0	0	0	0	0	0	0	0	0	0	0

	15	14	13	12	11	10	9	8	7	6	5	4	3	2	1	0
	reserved								MIS							
Type	RO	RO	RO	RO	RO	RO	RO	RO	RO	RO	RO	RO	RO	RO	RO	RO
Reset	0	0	0	0	0	0	0	0	0	0	0	0	0	0	0	0

Bit/Field	Name	Type	Reset	Description
31:8	reserved	RO	0x00	Software should not rely on the value of a reserved bit. To provide compatibility with future products, the value of a reserved bit should be preserved across a read-modify-write operation.
7:0	MIS	RO	0x00	GPIO Masked Interrupt Status Masked value of interrupt due to corresponding pin. The `MIS` values are defined as follows: Value Description 0 Corresponding GPIO line interrupt not active. 1 Corresponding GPIO line asserting interrupt.

Register 9: GPIO Interrupt Clear (GPIOICR), offset 0x41C

The **GPIOICR** register is the interrupt clear register. Writing a 1 to a bit in this register clears the corresponding interrupt edge detection logic register. Writing a 0 has no effect.

GPIO Interrupt Clear (GPIOICR)

GPIO Port A (APB) base: 0x4000.4000
GPIO Port A (AHB) base: 0x4005.8000
GPIO Port B (APB) base: 0x4000.5000
GPIO Port B (AHB) base: 0x4005.9000
GPIO Port C (APB) base: 0x4000.6000
GPIO Port C (AHB) base: 0x4005.A000
GPIO Port D (APB) base: 0x4000.7000
GPIO Port D (AHB) base: 0x4005.B000
GPIO Port E (APB) base: 0x4002.4000
GPIO Port E (AHB) base: 0x4005.C000
Offset 0x41C
Type W1C, reset 0x0000.0000

	31	30	29	28	27	26	25	24	23	22	21	20	19	18	17	16
	reserved															
Type	RO	RO	RO	RO	RO	RO	RO	RO	RO	RO	RO	RO	RO	RO	RO	RO
Reset	0	0	0	0	0	0	0	0	0	0	0	0	0	0	0	0

	15	14	13	12	11	10	9	8	7	6	5	4	3	2	1	0
	reserved								IC							
Type	RO	RO	RO	RO	RO	RO	RO	RO	W1C	W1C	W1C	W1C	W1C	W1C	W1C	W1C
Reset	0	0	0	0	0	0	0	0	0	0	0	0	0	0	0	0

Bit/Field	Name	Type	Reset	Description
31:8	reserved	RO	0x00	Software should not rely on the value of a reserved bit. To provide compatibility with future products, the value of a reserved bit should be preserved across a read-modify-write operation.
7:0	IC	W1C	0x00	GPIO Interrupt Clear The `IC` values are defined as follows: Value Description 0 Corresponding interrupt is unaffected. 1 Corresponding interrupt is cleared.

Register 10: GPIO Alternate Function Select (GPIOAFSEL), offset 0x420

The **GPIOAFSEL** register is the mode control select register. Writing a 1 to any bit in this register selects the hardware control for the corresponding GPIO line. All bits are cleared by a reset, therefore no GPIO line is set to hardware control by default.

The GPIO commit control registers provide a layer of protection against accidental programming of critical hardware peripherals. Protection is currently provided for the `NMI` pin (`PB7`) and the four JTAG/SWD pins (`PC[3:0]`). Writes to protected bits of the **GPIO Alternate Function Select (GPIOAFSEL)** register (see page 344), **GPIO Pull-Up Select (GPIOPUR)** register (see page 350), and **GPIO Digital Enable (GPIODEN)** register (see page 354) are not committed to storage unless the **GPIO Lock (GPIOLOCK)** register (see page 356) has been unlocked and the appropriate bits of the **GPIO Commit (GPIOCR)** register (see page 357) have been set to 1.

Important: All GPIO pins are tri-stated by default (**GPIOAFSEL**=0, **GPIODEN**=0, **GPIOPDR**=0, and **GPIOPUR**=0), with the exception of the four JTAG/SWD pins (`PC[3:0]`). The JTAG/SWD pins default to their JTAG/SWD functionality (**GPIOAFSEL**=1, **GPIODEN=1** and **GPIOPUR**=1). A Power-On-Reset ($\overline{\text{POR}}$) or asserting $\overline{\text{RST}}$ puts both groups of pins back to their default state.

Caution – It is possible to create a software sequence that prevents the debugger from connecting to the Stellaris microcontroller. If the program code loaded into flash immediately changes the JTAG pins to their GPIO functionality, the debugger may not have enough time to connect and halt the controller before the JTAG pin functionality switches. This may lock the debugger out of the part. This can be avoided with a software routine that restores JTAG functionality based on an external or software trigger.

GPIO Alternate Function Select (GPIOAFSEL)

GPIO Port A (APB) base: 0x4000.4000
GPIO Port A (AHB) base: 0x4005.8000
GPIO Port B (APB) base: 0x4000.5000
GPIO Port B (AHB) base: 0x4005.9000
GPIO Port C (APB) base: 0x4000.6000
GPIO Port C (AHB) base: 0x4005.A000
GPIO Port D (APB) base: 0x4000.7000
GPIO Port D (AHB) base: 0x4005.B000
GPIO Port E (APB) base: 0x4002.4000
GPIO Port E (AHB) base: 0x4005.C000
Offset 0x420
Type R/W, reset -

	31	30	29	28	27	26	25	24	23	22	21	20	19	18	17	16
	reserved															
Type	RO	RO	RO	RO	RO	RO	RO	RO	RO	RO	RO	RO	RO	RO	RO	RO
Reset	0	0	0	0	0	0	0	0	0	0	0	0	0	0	0	0

	15	14	13	12	11	10	9	8	7	6	5	4	3	2	1	0
	reserved								AFSEL							
Type	RO	RO	RO	RO	RO	RO	RO	RO	R/W	R/W	R/W	R/W	R/W	R/W	R/W	R/W
Reset	0	0	0	0	0	0	0	0	-	-	-	-	-	-	-	-

Bit/Field	Name	Type	Reset	Description
31:8	reserved	RO	0x00	Software should not rely on the value of a reserved bit. To provide compatibility with future products, the value of a reserved bit should be preserved across a read-modify-write operation.

Bit/Field	Name	Type	Reset	Description
7:0	AFSEL	R/W	-	GPIO Alternate Function Select The AFSEL values are defined as follows: Value Description 0 Software control of corresponding GPIO line (GPIO mode). 1 Hardware control of corresponding GPIO line (alternate hardware function). **Note:** The default reset value for the **GPIOAFSEL**, **GPIOPUR**, and **GPIODEN** registers are 0x0000.0000 for all GPIO pins, with the exception of the four JTAG/SWD pins (PC[3:0]). These four pins default to JTAG/SWD functionality. Because of this, the default reset value of these registers for Port C is 0x0000.000F.

Register 11: GPIO 2-mA Drive Select (GPIODR2R), offset 0x500

The **GPIODR2R** register is the 2-mA drive control register. It allows for each GPIO signal in the port to be individually configured without affecting the other pads. When writing a DRV2 bit for a GPIO signal, the corresponding DRV4 bit in the **GPIODR4R** register and the DRV8 bit in the **GPIODR8R** register are automatically cleared by hardware.

GPIO 2-mA Drive Select (GPIODR2R)

GPIO Port A (APB) base: 0x4000.4000
GPIO Port A (AHB) base: 0x4005.8000
GPIO Port B (APB) base: 0x4000.5000
GPIO Port B (AHB) base: 0x4005.9000
GPIO Port C (APB) base: 0x4000.6000
GPIO Port C (AHB) base: 0x4005.A000
GPIO Port D (APB) base: 0x4000.7000
GPIO Port D (AHB) base: 0x4005.B000
GPIO Port E (APB) base: 0x4002.4000
GPIO Port E (AHB) base: 0x4005.C000
Offset 0x500
Type R/W, reset 0x0000.00FF

	31	30	29	28	27	26	25	24	23	22	21	20	19	18	17	16
	reserved															
Type	RO	RO	RO	RO	RO	RO	RO	RO	RO	RO	RO	RO	RO	RO	RO	RO
Reset	0	0	0	0	0	0	0	0	0	0	0	0	0	0	0	0

	15	14	13	12	11	10	9	8	7	6	5	4	3	2	1	0
	reserved								DRV2							
Type	RO	RO	RO	RO	RO	RO	RO	RO	R/W	R/W	R/W	R/W	R/W	R/W	R/W	R/W
Reset	0	0	0	0	0	0	0	0	1	1	1	1	1	1	1	1

Bit/Field	Name	Type	Reset	Description
31:8	reserved	RO	0x00	Software should not rely on the value of a reserved bit. To provide compatibility with future products, the value of a reserved bit should be preserved across a read-modify-write operation.
7:0	DRV2	R/W	0xFF	Output Pad 2-mA Drive Enable A write of 1 to either **GPIODR4[n]** or **GPIODR8[n]** clears the corresponding 2-mA enable bit. The change is effective on the second clock cycle after the write if accessing GPIO via the APB memory aperture. If using AHB access, the change is effective on the next clock cycle.

Register 12: GPIO 4-mA Drive Select (GPIODR4R), offset 0x504

The **GPIODR4R** register is the 4-mA drive control register. It allows for each GPIO signal in the port to be individually configured without affecting the other pads. When writing the DRV4 bit for a GPIO signal, the corresponding DRV2 bit in the **GPIODR2R** register and the DRV8 bit in the **GPIODR8R** register are automatically cleared by hardware.

GPIO 4-mA Drive Select (GPIODR4R)

GPIO Port A (APB) base: 0x4000.4000
GPIO Port A (AHB) base: 0x4005.8000
GPIO Port B (APB) base: 0x4000.5000
GPIO Port B (AHB) base: 0x4005.9000
GPIO Port C (APB) base: 0x4000.6000
GPIO Port C (AHB) base: 0x4005.A000
GPIO Port D (APB) base: 0x4000.7000
GPIO Port D (AHB) base: 0x4005.B000
GPIO Port E (APB) base: 0x4002.4000
GPIO Port E (AHB) base: 0x4005.C000
Offset 0x504
Type R/W, reset 0x0000.0000

	31	30	29	28	27	26	25	24	23	22	21	20	19	18	17	16
	reserved															
Type	RO	RO	RO	RO	RO	RO	RO	RO	RO	RO	RO	RO	RO	RO	RO	RO
Reset	0	0	0	0	0	0	0	0	0	0	0	0	0	0	0	0

	15	14	13	12	11	10	9	8	7	6	5	4	3	2	1	0
	reserved								DRV4							
Type	RO	RO	RO	RO	RO	RO	RO	RO	R/W	R/W	R/W	R/W	R/W	R/W	R/W	R/W
Reset	0	0	0	0	0	0	0	0	0	0	0	0	0	0	0	0

Bit/Field	Name	Type	Reset	Description
31:8	reserved	RO	0x00	Software should not rely on the value of a reserved bit. To provide compatibility with future products, the value of a reserved bit should be preserved across a read-modify-write operation.
7:0	DRV4	R/W	0x00	Output Pad 4-mA Drive Enable A write of 1 to either **GPIODR2[n]** or **GPIODR8[n]** clears the corresponding 4-mA enable bit. The change is effective on the second clock cycle after the write if accessing GPIO via the APB memory aperture. If using AHB access, the change is effective on the next clock cycle.

Register 13: GPIO 8-mA Drive Select (GPIODR8R), offset 0x508

The **GPIODR8R** register is the 8-mA drive control register. It allows for each GPIO signal in the port to be individually configured without affecting the other pads. When writing the DRV8 bit for a GPIO signal, the corresponding DRV2 bit in the **GPIODR2R** register and the DRV4 bit in the **GPIODR4R** register are automatically cleared by hardware. The 8-mA setting is also used for high-current operation.

Note: There is no configuration difference between 8-mA and high-current operation. The additional current capacity results from a shift in the V_{OH}/V_{OL} levels. See “Recommended DC Operating Conditions” on page 673 for further information.

GPIO 8-mA Drive Select (GPIODR8R)

GPIO Port A (APB) base: 0x4000.4000
GPIO Port A (AHB) base: 0x4005.8000
GPIO Port B (APB) base: 0x4000.5000
GPIO Port B (AHB) base: 0x4005.9000
GPIO Port C (APB) base: 0x4000.6000
GPIO Port C (AHB) base: 0x4005.A000
GPIO Port D (APB) base: 0x4000.7000
GPIO Port D (AHB) base: 0x4005.B000
GPIO Port E (APB) base: 0x4002.4000
GPIO Port E (AHB) base: 0x4005.C000
Offset 0x508
Type R/W, reset 0x0000.0000

	31	30	29	28	27	26	25	24	23	22	21	20	19	18	17	16
	reserved															
Type	RO	RO	RO	RO	RO	RO	RO	RO	RO	RO	RO	RO	RO	RO	RO	RO
Reset	0	0	0	0	0	0	0	0	0	0	0	0	0	0	0	0

	15	14	13	12	11	10	9	8	7	6	5	4	3	2	1	0
	reserved								DRV8							
Type	RO	RO	RO	RO	RO	RO	RO	RO	R/W	R/W	R/W	R/W	R/W	R/W	R/W	R/W
Reset	0	0	0	0	0	0	0	0	0	0	0	0	0	0	0	0

Bit/Field	Name	Type	Reset	Description
31:8	reserved	RO	0x00	Software should not rely on the value of a reserved bit. To provide compatibility with future products, the value of a reserved bit should be preserved across a read-modify-write operation.
7:0	DRV8	R/W	0x00	Output Pad 8-mA Drive Enable A write of 1 to either **GPIODR2[n]** or **GPIODR4[n]** clears the corresponding 8-mA enable bit. The change is effective on the second clock cycle after the write if accessing GPIO via the APB memory aperture. If using AHB access, the change is effective on the next clock cycle.

Register 14: GPIO Open Drain Select (GPIOODR), offset 0x50C

The **GPIOODR** register is the open drain control register. Setting a bit in this register enables the open drain configuration of the corresponding GPIO pad. When open drain mode is enabled, the corresponding bit should also be set in the **GPIO Digital Enable (GPIODEN)** register (see page 354). Corresponding bits in the drive strength registers (**GPIODR2R**, **GPIODR4R**, **GPIODR8R**, and **GPIOSLR**) can be set to achieve the desired rise and fall times. The GPIO acts as an open-drain input if the corresponding bit in the **GPIODIR** register is cleared. If open drain is selected while the GPIO is configured as an input, the GPIO will remain an input and the open-drain selection has no effect until the GPIO is changed to an output.

GPIO Open Drain Select (GPIOODR)

GPIO Port A (APB) base: 0x4000.4000
GPIO Port A (AHB) base: 0x4005.8000
GPIO Port B (APB) base: 0x4000.5000
GPIO Port B (AHB) base: 0x4005.9000
GPIO Port C (APB) base: 0x4000.6000
GPIO Port C (AHB) base: 0x4005.A000
GPIO Port D (APB) base: 0x4000.7000
GPIO Port D (AHB) base: 0x4005.B000
GPIO Port E (APB) base: 0x4002.4000
GPIO Port E (AHB) base: 0x4005.C000
Offset 0x50C
Type R/W, reset 0x0000.0000

	31	30	29	28	27	26	25	24	23	22	21	20	19	18	17	16
	reserved															
Type	RO	RO	RO	RO	RO	RO	RO	RO	RO	RO	RO	RO	RO	RO	RO	RO
Reset	0	0	0	0	0	0	0	0	0	0	0	0	0	0	0	0

	15	14	13	12	11	10	9	8	7	6	5	4	3	2	1	0
	reserved								ODE							
Type	RO	RO	RO	RO	RO	RO	RO	RO	R/W	R/W	R/W	R/W	R/W	R/W	R/W	R/W
Reset	0	0	0	0	0	0	0	0	0	0	0	0	0	0	0	0

Bit/Field	Name	Type	Reset	Description
31:8	reserved	RO	0x00	Software should not rely on the value of a reserved bit. To provide compatibility with future products, the value of a reserved bit should be preserved across a read-modify-write operation.
7:0	ODE	R/W	0x00	Output Pad Open Drain Enable The `ODE` values are defined as follows: Value Description 0 Open drain configuration is disabled. 1 Open drain configuration is enabled.

Register 15: GPIO Pull-Up Select (GPIOPUR), offset 0x510

The **GPIOPUR** register is the pull-up control register. When a bit is set to 1, it enables a weak pull-up resistor on the corresponding GPIO signal. Setting a bit in **GPIOPUR** automatically clears the corresponding bit in the **GPIO Pull-Down Select (GPIOPDR)** register (see page 352). Write access to this register is protected with the **GPIOCR** register. Bits in **GPIOCR** that are set to 0 will prevent writes to the equivalent bit in this register.

Note: The GPIO commit control registers provide a layer of protection against accidental programming of critical hardware peripherals. Protection is currently provided for the `NMI` pin (`PB7`) and the four JTAG/SWD pins (`PC[3:0]`). Writes to protected bits of the **GPIO Alternate Function Select (GPIOAFSEL)** register (see page 344), **GPIO Pull-Up Select (GPIOPUR)** register (see page 350), and **GPIO Digital Enable (GPIODEN)** register (see page 354) are not committed to storage unless the **GPIO Lock (GPIOLOCK)** register (see page 356) has been unlocked and the appropriate bits of the **GPIO Commit (GPIOCR)** register (see page 357) have been set to 1.

GPIO Pull-Up Select (GPIOPUR)

GPIO Port A (APB) base: 0x4000.4000
GPIO Port A (AHB) base: 0x4005.8000
GPIO Port B (APB) base: 0x4000.5000
GPIO Port B (AHB) base: 0x4005.9000
GPIO Port C (APB) base: 0x4000.6000
GPIO Port C (AHB) base: 0x4005.A000
GPIO Port D (APB) base: 0x4000.7000
GPIO Port D (AHB) base: 0x4005.B000
GPIO Port E (APB) base: 0x4002.4000
GPIO Port E (AHB) base: 0x4005.C000
Offset 0x510
Type R/W, reset -

	31	30	29	28	27	26	25	24	23	22	21	20	19	18	17	16
	reserved															
Type	RO	RO	RO	RO	RO	RO	RO	RO	RO	RO	RO	RO	RO	RO	RO	RO
Reset	0	0	0	0	0	0	0	0	0	0	0	0	0	0	0	0

	15	14	13	12	11	10	9	8	7	6	5	4	3	2	1	0
	reserved								PUE							
Type	RO	RO	RO	RO	RO	RO	RO	RO	R/W	R/W	R/W	R/W	R/W	R/W	R/W	R/W
Reset	0	0	0	0	0	0	0	0	-	-	-	-	-	-	-	-

Bit/Field	Name	Type	Reset	Description
31:8	reserved	RO	0x00	Software should not rely on the value of a reserved bit. To provide compatibility with future products, the value of a reserved bit should be preserved across a read-modify-write operation.

Bit/Field	Name	Type	Reset	Description
7:0	PUE	R/W	-	Pad Weak Pull-Up Enable

Value	Description
0	The corresponding pin's weak pull-up resistor is disabled.
1	The corresponding pin's weak pull-up resistor is enabled.

A write of 1 to **GPIOPDR[n]** clears the corresponding **GPIOPUR[n]** enables. The change is effective on the second clock cycle after the write.

Note: The default reset value for the **GPIOAFSEL**, **GPIOPUR**, and **GPIODEN** registers are 0x0000.0000 for all GPIO pins, with the exception of the four JTAG/SWD pins (`PC[3:0]`). These four pins default to JTAG/SWD functionality. Because of this, the default reset value of these registers for Port C is 0x0000.000F.

Register 16: GPIO Pull-Down Select (GPIOPDR), offset 0x514

The **GPIOPDR** register is the pull-down control register. When a bit is set to 1, it enables a weak pull-down resistor on the corresponding GPIO signal. Setting a bit in **GPIOPDR** automatically clears the corresponding bit in the **GPIO Pull-Up Select (GPIOPUR)** register (see page 350).

GPIO Pull-Down Select (GPIOPDR)

GPIO Port A (APB) base: 0x4000.4000
GPIO Port A (AHB) base: 0x4005.8000
GPIO Port B (APB) base: 0x4000.5000
GPIO Port B (AHB) base: 0x4005.9000
GPIO Port C (APB) base: 0x4000.6000
GPIO Port C (AHB) base: 0x4005.A000
GPIO Port D (APB) base: 0x4000.7000
GPIO Port D (AHB) base: 0x4005.B000
GPIO Port E (APB) base: 0x4002.4000
GPIO Port E (AHB) base: 0x4005.C000
Offset 0x514
Type R/W, reset 0x0000.0000

	31	30	29	28	27	26	25	24	23	22	21	20	19	18	17	16
	reserved															
Type	RO	RO	RO	RO	RO	RO	RO	RO	RO	RO	RO	RO	RO	RO	RO	RO
Reset	0	0	0	0	0	0	0	0	0	0	0	0	0	0	0	0

	15	14	13	12	11	10	9	8	7	6	5	4	3	2	1	0
	reserved								PDE							
Type	RO	RO	RO	RO	RO	RO	RO	RO	R/W	R/W	R/W	R/W	R/W	R/W	R/W	R/W
Reset	0	0	0	0	0	0	0	0	0	0	0	0	0	0	0	0

Bit/Field	Name	Type	Reset	Description
31:8	reserved	RO	0x00	Software should not rely on the value of a reserved bit. To provide compatibility with future products, the value of a reserved bit should be preserved across a read-modify-write operation.
7:0	PDE	R/W	0x00	Pad Weak Pull-Down Enable

Value	Description
0	The corresponding pin's weak pull-down resistor is disabled.
1	The corresponding pin's weak pull-down resistor is enabled.

A write of 1 to **GPIOPUR[n]** clears the corresponding **GPIOPDR[n]** enables. The change is effective on the second clock cycle after the write.

Register 17: GPIO Slew Rate Control Select (GPIOSLR), offset 0x518

The **GPIOSLR** register is the slew rate control register. Slew rate control is only available when using the 8-mA drive strength option via the **GPIO 8-mA Drive Select (GPIODR8R)** register (see page 348).

GPIO Slew Rate Control Select (GPIOSLR)

GPIO Port A (APB) base: 0x4000.4000
GPIO Port A (AHB) base: 0x4005.8000
GPIO Port B (APB) base: 0x4000.5000
GPIO Port B (AHB) base: 0x4005.9000
GPIO Port C (APB) base: 0x4000.6000
GPIO Port C (AHB) base: 0x4005.A000
GPIO Port D (APB) base: 0x4000.7000
GPIO Port D (AHB) base: 0x4005.B000
GPIO Port E (APB) base: 0x4002.4000
GPIO Port E (AHB) base: 0x4005.C000
Offset 0x518
Type R/W, reset 0x0000.0000

	31	30	29	28	27	26	25	24	23	22	21	20	19	18	17	16
	reserved															
Type	RO	RO	RO	RO	RO	RO	RO	RO	RO	RO	RO	RO	RO	RO	RO	RO
Reset	0	0	0	0	0	0	0	0	0	0	0	0	0	0	0	0

	15	14	13	12	11	10	9	8	7	6	5	4	3	2	1	0
	reserved								SRL							
Type	RO	RO	RO	RO	RO	RO	RO	RO	R/W	R/W	R/W	R/W	R/W	R/W	R/W	R/W
Reset	0	0	0	0	0	0	0	0	0	0	0	0	0	0	0	0

Bit/Field	Name	Type	Reset	Description
31:8	reserved	RO	0x00	Software should not rely on the value of a reserved bit. To provide compatibility with future products, the value of a reserved bit should be preserved across a read-modify-write operation.
7:0	SRL	R/W	0x00	Slew Rate Limit Enable (8-mA drive only) The SRL values are defined as follows: Value Description 0 Slew rate control disabled. 1 Slew rate control enabled.

Register 18: GPIO Digital Enable (GPIODEN), offset 0x51C

Note: Pins configured as digital inputs are Schmitt-triggered.

The **GPIODEN** register is the digital enable register. By default, with the exception of the GPIO signals used for JTAG/SWD function, all other GPIO signals are configured out of reset to be undriven (tristate). Their digital function is disabled; they do not drive a logic value on the pin and they do not allow the pin voltage into the GPIO receiver. To use the pin in a digital function (either GPIO or alternate function), the corresponding `GPIODEN` bit must be set.

Note: The GPIO commit control registers provide a layer of protection against accidental programming of critical hardware peripherals. Protection is currently provided for the `NMI` pin (`PB7`) and the four JTAG/SWD pins (`PC[3:0]`). Writes to protected bits of the **GPIO Alternate Function Select (GPIOAFSEL)** register (see page 344), **GPIO Pull-Up Select (GPIOPUR)** register (see page 350), and **GPIO Digital Enable (GPIODEN)** register (see page 354) are not committed to storage unless the **GPIO Lock (GPIOLOCK)** register (see page 356) has been unlocked and the appropriate bits of the **GPIO Commit (GPIOCR)** register (see page 357) have been set to 1.

GPIO Digital Enable (GPIODEN)

GPIO Port A (APB) base: 0x4000.4000
GPIO Port A (AHB) base: 0x4005.8000
GPIO Port B (APB) base: 0x4000.5000
GPIO Port B (AHB) base: 0x4005.9000
GPIO Port C (APB) base: 0x4000.6000
GPIO Port C (AHB) base: 0x4005.A000
GPIO Port D (APB) base: 0x4000.7000
GPIO Port D (AHB) base: 0x4005.B000
GPIO Port E (APB) base: 0x4002.4000
GPIO Port E (AHB) base: 0x4005.C000
Offset 0x51C
Type R/W, reset -

	31	30	29	28	27	26	25	24	23	22	21	20	19	18	17	16
	reserved															
Type	RO	RO	RO	RO	RO	RO	RO	RO	RO	RO	RO	RO	RO	RO	RO	RO
Reset	0	0	0	0	0	0	0	0	0	0	0	0	0	0	0	0

	15	14	13	12	11	10	9	8	7	6	5	4	3	2	1	0
	reserved								DEN							
Type	RO	RO	RO	RO	RO	RO	RO	RO	R/W	R/W	R/W	R/W	R/W	R/W	R/W	R/W
Reset	0	0	0	0	0	0	0	0	-	-	-	-	-	-	-	-

Bit/Field	Name	Type	Reset	Description
31:8	reserved	RO	0x00	Software should not rely on the value of a reserved bit. To provide compatibility with future products, the value of a reserved bit should be preserved across a read-modify-write operation.

Bit/Field	Name	Type	Reset	Description
7:0	DEN	R/W	-	Digital Enable The `DEN` values are defined as follows: Value Description 0 Digital functions disabled. 1 Digital functions enabled. **Note:** The default reset value for the **GPIOAFSEL**, **GPIOPUR**, and **GPIODEN** registers are 0x0000.0000 for all GPIO pins, with the exception of the four JTAG/SWD pins (`PC[3:0]`). These four pins default to JTAG/SWD functionality. Because of this, the default reset value of these registers for Port C is 0x0000.000F.

Register 19: GPIO Lock (GPIOLOCK), offset 0x520

The **GPIOLOCK** register enables write access to the **GPIOCR** register (see page 357). Writing 0x0x4C4F.434B to the **GPIOLOCK** register will unlock the **GPIOCR** register. Writing any other value to the **GPIOLOCK** register re-enables the locked state. Reading the **GPIOLOCK** register returns the lock status rather than the 32-bit value that was previously written. Therefore, when write accesses are disabled, or locked, reading the **GPIOLOCK** register returns 0x00000001. When write accesses are enabled, or unlocked, reading the **GPIOLOCK** register returns 0x00000000.

GPIO Lock (GPIOLOCK)

GPIO Port A (APB) base: 0x4000.4000
GPIO Port A (AHB) base: 0x4005.8000
GPIO Port B (APB) base: 0x4000.5000
GPIO Port B (AHB) base: 0x4005.9000
GPIO Port C (APB) base: 0x4000.6000
GPIO Port C (AHB) base: 0x4005.A000
GPIO Port D (APB) base: 0x4000.7000
GPIO Port D (AHB) base: 0x4005.B000
GPIO Port E (APB) base: 0x4002.4000
GPIO Port E (AHB) base: 0x4005.C000
Offset 0x520
Type R/W, reset 0x0000.0001

	31	30	29	28	27	26	25	24	23	22	21	20	19	18	17	16
	LOCK															
Type	R/W	R/W	R/W	R/W	R/W	R/W	R/W	R/W	R/W	R/W	R/W	R/W	R/W	R/W	R/W	R/W
Reset	0	0	0	0	0	0	0	0	0	0	0	0	0	0	0	0

	15	14	13	12	11	10	9	8	7	6	5	4	3	2	1	0
	LOCK															
Type	R/W	R/W	R/W	R/W	R/W	R/W	R/W	R/W	R/W	R/W	R/W	R/W	R/W	R/W	R/W	R/W
Reset	0	0	0	0	0	0	0	0	0	0	0	0	0	0	0	1

Bit/Field	Name	Type	Reset	Description
31:0	LOCK	R/W	0x0000.0001	GPIO Lock A write of the value 0x4C4F.434B unlocks the **GPIO Commit (GPIOCR)** register for write access. A write of any other value or a write to the **GPIOCR** register reapplies the lock, preventing any register updates. A read of this register returns the following values: Value — Description 0x0000.0001 — Locked 0x0000.0000 — Unlocked

Register 20: GPIO Commit (GPIOCR), offset 0x524

The **GPIOCR** register is the commit register. The value of the **GPIOCR** register determines which bits of the **GPIOAFSEL**, **GPIOPUR**, and **GPIODEN** registers are committed when a write to these registers is performed. If a bit in the **GPIOCR** register is zero, the data being written to the corresponding bit in the **GPIOAFSEL**, **GPIOPUR**, or **GPIODEN** registers cannot be committed and retains its previous value. If a bit in the **GPIOCR** register is set, the data being written to the corresponding bit of the **GPIOAFSEL**, **GPIOPUR**, or **GPIODEN** registers is committed to the register and reflects the new value.

The contents of the **GPIOCR** register can only be modified if the **GPIOLOCK** register is unlocked. Writes to the **`GPIOCR`** register are ignored if the **GPIOLOCK** register is locked.

Important: This register is designed to prevent accidental programming of the registers that control connectivity to the NMI and JTAG/SWD debug hardware. By initializing the bits of the **GPIOCR** register to 0 for `PB7` and `PC[3:0]`, the NMI and JTAG/SWD debug port can only be converted to GPIOs through a deliberate set of writes to the **GPIOLOCK**, **GPIOCR**, and the corresponding registers.

Because this protection is currently only implemented on the NMI and JTAG/SWD pins on `PB7` and `PC[3:0]`, all of the other bits in the **GPIOCR** registers cannot be written with 0x0. These bits are hardwired to 0x1, ensuring that it is always possible to commit new values to the **GPIOAFSEL**, **GPIOPUR**, or **GPIODEN** register bits of these other pins.

GPIO Commit (GPIOCR)

GPIO Port A (APB) base: 0x4000.4000
GPIO Port A (AHB) base: 0x4005.8000
GPIO Port B (APB) base: 0x4000.5000
GPIO Port B (AHB) base: 0x4005.9000
GPIO Port C (APB) base: 0x4000.6000
GPIO Port C (AHB) base: 0x4005.A000
GPIO Port D (APB) base: 0x4000.7000
GPIO Port D (AHB) base: 0x4005.B000
GPIO Port E (APB) base: 0x4002.4000
GPIO Port E (AHB) base: 0x4005.C000
Offset 0x524
Type -, reset -

	31	30	29	28	27	26	25	24	23	22	21	20	19	18	17	16
	reserved															
Type	RO	RO	RO	RO	RO	RO	RO	RO	RO	RO	RO	RO	RO	RO	RO	RO
Reset	0	0	0	0	0	0	0	0	0	0	0	0	0	0	0	0

	15	14	13	12	11	10	9	8	7	6	5	4	3	2	1	0
	reserved								CR							
Type	RO	RO	RO	RO	RO	RO	RO	RO	-	-	-	-	-	-	-	-
Reset	0	0	0	0	0	0	0	0	-	-	-	-	-	-	-	-

Bit/Field	Name	Type	Reset	Description
31:8	reserved	RO	0x00	Software should not rely on the value of a reserved bit. To provide compatibility with future products, the value of a reserved bit should be preserved across a read-modify-write operation.

Bit/Field	Name	Type	Reset	Description
7:0	CR	-	-	GPIO Commit On a bit-wise basis, any bit set allows the corresponding **GPIOAFSEL**, **GPIOPUR**, or **GPIODEN** registers to be written. **Note:** The default register type for the **GPIOCR** register is RO for all GPIO pins with the exception of the `NMI` pin and the four JTAG/SWD pins (`PB7` and `PC[3:0]`). These five pins are currently the only GPIOs that are protected by the **GPIOCR** register. Because of this, the register type for GPIO Port B7 and GPIO Port C[3:0] is R/W. The default reset value for the **GPIOCR** register is 0x0000.00FF for all GPIO pins, with the exception of the `NMI` pin and the four JTAG/SWD pins (`PB7` and `PC[3:0]`). To ensure that the JTAG port is not accidentally programmed as a GPIO, these four pins default to non-committable. To ensure that the `NMI` pin is not accidentally programmed as the non-maskable interrupt pin, it defaults to non-committable. Because of this, the default reset value of **GPIOCR** for GPIO Port B is 0x0000.007F while the default reset value of GPIOCR for Port C is 0x0000.00F0.

Register 21: GPIO Analog Mode Select (GPIOAMSEL), offset 0x528

Important: This register is only valid for ports D and E.

If any pin is to be used as an ADC input, the appropriate bit in **GPIOAMSEL** must be written to 1 to disable the analog isolation circuit.

The **GPIOAMSEL** register controls isolation circuits to the analog side of a unified I/O pad. Because the GPIOs may be driven by a 5V source and affect analog operation, analog circuitry requires isolation from the pins when not used in their analog function.

Each bit of this register controls the isolation circuitry for circuits that share the same pin as the GPIO bit lane.

GPIO Analog Mode Select (GPIOAMSEL)

GPIO Port A (APB) base: 0x4000.4000
GPIO Port A (AHB) base: 0x4005.8000
GPIO Port B (APB) base: 0x4000.5000
GPIO Port B (AHB) base: 0x4005.9000
GPIO Port C (APB) base: 0x4000.6000
GPIO Port C (AHB) base: 0x4005.A000
GPIO Port D (APB) base: 0x4000.7000
GPIO Port D (AHB) base: 0x4005.B000
GPIO Port E (APB) base: 0x4002.4000
GPIO Port E (AHB) base: 0x4005.C000
Offset 0x528
Type R/W, reset 0x0000.0000

	31	30	29	28	27	26	25	24	23	22	21	20	19	18	17	16
	reserved															
Type	RO	RO	RO	RO	RO	RO	RO	RO	RO	RO	RO	RO	RO	RO	RO	RO
Reset	0	0	0	0	0	0	0	0	0	0	0	0	0	0	0	0

	15	14	13	12	11	10	9	8	7	6	5	4	3	2	1	0
	reserved												GPIOAMSEL			
Type	RO	RO	RO	RO	RO	RO	RO	RO	RO	RO	RO	RO	R/W	R/W	R/W	R/W
Reset	0	0	0	0	0	0	0	0	0	0	0	0	0	0	0	0

Bit/Field	Name	Type	Reset	Description
31:4	reserved	RO	0x00	Software should not rely on the value of a reserved bit. To provide compatibility with future products, the value of a reserved bit should be preserved across a read-modify-write operation.
3:0	GPIOAMSEL	R/W	0x00	GPIO Analog Mode Select

Value	Description
0	Analog function of the pin is disabled, the isolation is enabled, and the pin is capable of digital functions as specified by the other GPIO configuration registers.
1	Analog function of the pin is enabled, the isolation is disabled, and the pin is capable of analog functions.

Note: This register and bits are required only for GPIO bit lanes that share analog function through a unified I/O pad.

The reset state of this register is 0 for all bit lanes.

Register 22: GPIO Peripheral Identification 4 (GPIOPeriphID4), offset 0xFD0

The **GPIOPeriphID4**, **GPIOPeriphID5**, **GPIOPeriphID6**, and **GPIOPeriphID7** registers can conceptually be treated as one 32-bit register; each register contains eight bits of the 32-bit register, used by software to identify the peripheral.

GPIO Peripheral Identification 4 (GPIOPeriphID4)

GPIO Port A (APB) base: 0x4000.4000
GPIO Port A (AHB) base: 0x4005.8000
GPIO Port B (APB) base: 0x4000.5000
GPIO Port B (AHB) base: 0x4005.9000
GPIO Port C (APB) base: 0x4000.6000
GPIO Port C (AHB) base: 0x4005.A000
GPIO Port D (APB) base: 0x4000.7000
GPIO Port D (AHB) base: 0x4005.B000
GPIO Port E (APB) base: 0x4002.4000
GPIO Port E (AHB) base: 0x4005.C000
Offset 0xFD0
Type RO, reset 0x0000.0000

	31	30	29	28	27	26	25	24	23	22	21	20	19	18	17	16
	reserved															
Type	RO	RO	RO	RO	RO	RO	RO	RO	RO	RO	RO	RO	RO	RO	RO	RO
Reset	0	0	0	0	0	0	0	0	0	0	0	0	0	0	0	0

	15	14	13	12	11	10	9	8	7	6	5	4	3	2	1	0
	reserved								PID4							
Type	RO	RO	RO	RO	RO	RO	RO	RO	RO	RO	RO	RO	RO	RO	RO	RO
Reset	0	0	0	0	0	0	0	0	0	0	0	0	0	0	0	0

Bit/Field	Name	Type	Reset	Description
31:8	reserved	RO	0x00	Software should not rely on the value of a reserved bit. To provide compatibility with future products, the value of a reserved bit should be preserved across a read-modify-write operation.
7:0	PID4	RO	0x00	GPIO Peripheral ID Register[7:0]

Register 23: GPIO Peripheral Identification 5 (GPIOPeriphID5), offset 0xFD4

The **GPIOPeriphID4**, **GPIOPeriphID5**, **GPIOPeriphID6**, and **GPIOPeriphID7** registers can conceptually be treated as one 32-bit register; each register contains eight bits of the 32-bit register, used by software to identify the peripheral.

GPIO Peripheral Identification 5 (GPIOPeriphID5)

GPIO Port A (APB) base: 0x4000.4000
GPIO Port A (AHB) base: 0x4005.8000
GPIO Port B (APB) base: 0x4000.5000
GPIO Port B (AHB) base: 0x4005.9000
GPIO Port C (APB) base: 0x4000.6000
GPIO Port C (AHB) base: 0x4005.A000
GPIO Port D (APB) base: 0x4000.7000
GPIO Port D (AHB) base: 0x4005.B000
GPIO Port E (APB) base: 0x4002.4000
GPIO Port E (AHB) base: 0x4005.C000
Offset 0xFD4
Type RO, reset 0x0000.0000

	31	30	29	28	27	26	25	24	23	22	21	20	19	18	17	16
	reserved															
Type	RO	RO	RO	RO	RO	RO	RO	RO	RO	RO	RO	RO	RO	RO	RO	RO
Reset	0	0	0	0	0	0	0	0	0	0	0	0	0	0	0	0

	15	14	13	12	11	10	9	8	7	6	5	4	3	2	1	0
	reserved								PID5							
Type	RO	RO	RO	RO	RO	RO	RO	RO	RO	RO	RO	RO	RO	RO	RO	RO
Reset	0	0	0	0	0	0	0	0	0	0	0	0	0	0	0	0

Bit/Field	Name	Type	Reset	Description
31:8	reserved	RO	0x00	Software should not rely on the value of a reserved bit. To provide compatibility with future products, the value of a reserved bit should be preserved across a read-modify-write operation.
7:0	PID5	RO	0x00	GPIO Peripheral ID Register[15:8]

Register 24: GPIO Peripheral Identification 6 (GPIOPeriphID6), offset 0xFD8

The **GPIOPeriphID4**, **GPIOPeriphID5**, **GPIOPeriphID6**, and **GPIOPeriphID7** registers can conceptually be treated as one 32-bit register; each register contains eight bits of the 32-bit register, used by software to identify the peripheral.

GPIO Peripheral Identification 6 (GPIOPeriphID6)

GPIO Port A (APB) base: 0x4000.4000
GPIO Port A (AHB) base: 0x4005.8000
GPIO Port B (APB) base: 0x4000.5000
GPIO Port B (AHB) base: 0x4005.9000
GPIO Port C (APB) base: 0x4000.6000
GPIO Port C (AHB) base: 0x4005.A000
GPIO Port D (APB) base: 0x4000.7000
GPIO Port D (AHB) base: 0x4005.B000
GPIO Port E (APB) base: 0x4002.4000
GPIO Port E (AHB) base: 0x4005.C000
Offset 0xFD8
Type RO, reset 0x0000.0000

	31	30	29	28	27	26	25	24	23	22	21	20	19	18	17	16
	reserved															
Type	RO	RO	RO	RO	RO	RO	RO	RO	RO	RO	RO	RO	RO	RO	RO	RO
Reset	0	0	0	0	0	0	0	0	0	0	0	0	0	0	0	0

	15	14	13	12	11	10	9	8	7	6	5	4	3	2	1	0
	reserved								PID6							
Type	RO	RO	RO	RO	RO	RO	RO	RO	RO	RO	RO	RO	RO	RO	RO	RO
Reset	0	0	0	0	0	0	0	0	0	0	0	0	0	0	0	0

Bit/Field	Name	Type	Reset	Description
31:8	reserved	RO	0x00	Software should not rely on the value of a reserved bit. To provide compatibility with future products, the value of a reserved bit should be preserved across a read-modify-write operation.
7:0	PID6	RO	0x00	GPIO Peripheral ID Register[23:16]

Register 25: GPIO Peripheral Identification 7 (GPIOPeriphID7), offset 0xFDC

The **GPIOPeriphID4**, **GPIOPeriphID5**, **GPIOPeriphID6**, and **GPIOPeriphID7** registers can conceptually be treated as one 32-bit register; each register contains eight bits of the 32-bit register, used by software to identify the peripheral.

GPIO Peripheral Identification 7 (GPIOPeriphID7)

GPIO Port A (APB) base: 0x4000.4000
GPIO Port A (AHB) base: 0x4005.8000
GPIO Port B (APB) base: 0x4000.5000
GPIO Port B (AHB) base: 0x4005.9000
GPIO Port C (APB) base: 0x4000.6000
GPIO Port C (AHB) base: 0x4005.A000
GPIO Port D (APB) base: 0x4000.7000
GPIO Port D (AHB) base: 0x4005.B000
GPIO Port E (APB) base: 0x4002.4000
GPIO Port E (AHB) base: 0x4005.C000
Offset 0xFDC
Type RO, reset 0x0000.0000

	31	30	29	28	27	26	25	24	23	22	21	20	19	18	17	16
	reserved															
Type	RO	RO	RO	RO	RO	RO	RO	RO	RO	RO	RO	RO	RO	RO	RO	RO
Reset	0	0	0	0	0	0	0	0	0	0	0	0	0	0	0	0

	15	14	13	12	11	10	9	8	7	6	5	4	3	2	1	0
	reserved								PID7							
Type	RO	RO	RO	RO	RO	RO	RO	RO	RO	RO	RO	RO	RO	RO	RO	RO
Reset	0	0	0	0	0	0	0	0	0	0	0	0	0	0	0	0

Bit/Field	Name	Type	Reset	Description
31:8	reserved	RO	0x00	Software should not rely on the value of a reserved bit. To provide compatibility with future products, the value of a reserved bit should be preserved across a read-modify-write operation.
7:0	PID7	RO	0x00	GPIO Peripheral ID Register[31:24]

Register 26: GPIO Peripheral Identification 0 (GPIOPeriphID0), offset 0xFE0

The **GPIOPeriphID0**, **GPIOPeriphID1**, **GPIOPeriphID2**, and **GPIOPeriphID3** registers can conceptually be treated as one 32-bit register; each register contains eight bits of the 32-bit register, used by software to identify the peripheral.

GPIO Peripheral Identification 0 (GPIOPeriphID0)

GPIO Port A (APB) base: 0x4000.4000
GPIO Port A (AHB) base: 0x4005.8000
GPIO Port B (APB) base: 0x4000.5000
GPIO Port B (AHB) base: 0x4005.9000
GPIO Port C (APB) base: 0x4000.6000
GPIO Port C (AHB) base: 0x4005.A000
GPIO Port D (APB) base: 0x4000.7000
GPIO Port D (AHB) base: 0x4005.B000
GPIO Port E (APB) base: 0x4002.4000
GPIO Port E (AHB) base: 0x4005.C000
Offset 0xFE0
Type RO, reset 0x0000.0061

	31	30	29	28	27	26	25	24	23	22	21	20	19	18	17	16
	reserved															
Type	RO	RO	RO	RO	RO	RO	RO	RO	RO	RO	RO	RO	RO	RO	RO	RO
Reset	0	0	0	0	0	0	0	0	0	0	0	0	0	0	0	0

	15	14	13	12	11	10	9	8	7	6	5	4	3	2	1	0
	reserved								PID0							
Type	RO	RO	RO	RO	RO	RO	RO	RO	RO	RO	RO	RO	RO	RO	RO	RO
Reset	0	0	0	0	0	0	0	0	0	1	1	0	0	0	0	1

Bit/Field	Name	Type	Reset	Description
31:8	reserved	RO	0x00	Software should not rely on the value of a reserved bit. To provide compatibility with future products, the value of a reserved bit should be preserved across a read-modify-write operation.
7:0	PID0	RO	0x61	GPIO Peripheral ID Register[7:0] Can be used by software to identify the presence of this peripheral.

Register 27: GPIO Peripheral Identification 1 (GPIOPeriphID1), offset 0xFE4

The **GPIOPeriphID0**, **GPIOPeriphID1**, **GPIOPeriphID2**, and **GPIOPeriphID3** registers can conceptually be treated as one 32-bit register; each register contains eight bits of the 32-bit register, used by software to identify the peripheral.

GPIO Peripheral Identification 1 (GPIOPeriphID1)

GPIO Port A (APB) base: 0x4000.4000
GPIO Port A (AHB) base: 0x4005.8000
GPIO Port B (APB) base: 0x4000.5000
GPIO Port B (AHB) base: 0x4005.9000
GPIO Port C (APB) base: 0x4000.6000
GPIO Port C (AHB) base: 0x4005.A000
GPIO Port D (APB) base: 0x4000.7000
GPIO Port D (AHB) base: 0x4005.B000
GPIO Port E (APB) base: 0x4002.4000
GPIO Port E (AHB) base: 0x4005.C000
Offset 0xFE4
Type RO, reset 0x0000.0000

	31	30	29	28	27	26	25	24	23	22	21	20	19	18	17	16
	reserved															
Type	RO	RO	RO	RO	RO	RO	RO	RO	RO	RO	RO	RO	RO	RO	RO	RO
Reset	0	0	0	0	0	0	0	0	0	0	0	0	0	0	0	0

	15	14	13	12	11	10	9	8	7	6	5	4	3	2	1	0
	reserved								PID1							
Type	RO	RO	RO	RO	RO	RO	RO	RO	RO	RO	RO	RO	RO	RO	RO	RO
Reset	0	0	0	0	0	0	0	0	0	0	0	0	0	0	0	0

Bit/Field	Name	Type	Reset	Description
31:8	reserved	RO	0x00	Software should not rely on the value of a reserved bit. To provide compatibility with future products, the value of a reserved bit should be preserved across a read-modify-write operation.
7:0	PID1	RO	0x00	GPIO Peripheral ID Register[15:8] Can be used by software to identify the presence of this peripheral.

Register 28: GPIO Peripheral Identification 2 (GPIOPeriphID2), offset 0xFE8

The **GPIOPeriphID0**, **GPIOPeriphID1**, **GPIOPeriphID2**, and **GPIOPeriphID3** registers can conceptually be treated as one 32-bit register; each register contains eight bits of the 32-bit register, used by software to identify the peripheral.

GPIO Peripheral Identification 2 (GPIOPeriphID2)

GPIO Port A (APB) base: 0x4000.4000
GPIO Port A (AHB) base: 0x4005.8000
GPIO Port B (APB) base: 0x4000.5000
GPIO Port B (AHB) base: 0x4005.9000
GPIO Port C (APB) base: 0x4000.6000
GPIO Port C (AHB) base: 0x4005.A000
GPIO Port D (APB) base: 0x4000.7000
GPIO Port D (AHB) base: 0x4005.B000
GPIO Port E (APB) base: 0x4002.4000
GPIO Port E (AHB) base: 0x4005.C000
Offset 0xFE8
Type RO, reset 0x0000.0018

	31	30	29	28	27	26	25	24	23	22	21	20	19	18	17	16
	reserved															
Type	RO	RO	RO	RO	RO	RO	RO	RO	RO	RO	RO	RO	RO	RO	RO	RO
Reset	0	0	0	0	0	0	0	0	0	0	0	0	0	0	0	0

	15	14	13	12	11	10	9	8	7	6	5	4	3	2	1	0
	reserved								PID2							
Type	RO	RO	RO	RO	RO	RO	RO	RO	RO	RO	RO	RO	RO	RO	RO	RO
Reset	0	0	0	0	0	0	0	0	0	0	0	1	1	0	0	0

Bit/Field	Name	Type	Reset	Description
31:8	reserved	RO	0x00	Software should not rely on the value of a reserved bit. To provide compatibility with future products, the value of a reserved bit should be preserved across a read-modify-write operation.
7:0	PID2	RO	0x18	GPIO Peripheral ID Register[23:16] Can be used by software to identify the presence of this peripheral.

Register 29: GPIO Peripheral Identification 3 (GPIOPeriphID3), offset 0xFEC

The **GPIOPeriphID0**, **GPIOPeriphID1**, **GPIOPeriphID2**, and **GPIOPeriphID3** registers can conceptually be treated as one 32-bit register; each register contains eight bits of the 32-bit register, used by software to identify the peripheral.

GPIO Peripheral Identification 3 (GPIOPeriphID3)

GPIO Port A (APB) base: 0x4000.4000
GPIO Port A (AHB) base: 0x4005.8000
GPIO Port B (APB) base: 0x4000.5000
GPIO Port B (AHB) base: 0x4005.9000
GPIO Port C (APB) base: 0x4000.6000
GPIO Port C (AHB) base: 0x4005.A000
GPIO Port D (APB) base: 0x4000.7000
GPIO Port D (AHB) base: 0x4005.B000
GPIO Port E (APB) base: 0x4002.4000
GPIO Port E (AHB) base: 0x4005.C000
Offset 0xFEC
Type RO, reset 0x0000.0001

	31	30	29	28	27	26	25	24	23	22	21	20	19	18	17	16
	reserved															
Type	RO	RO	RO	RO	RO	RO	RO	RO	RO	RO	RO	RO	RO	RO	RO	RO
Reset	0	0	0	0	0	0	0	0	0	0	0	0	0	0	0	0

	15	14	13	12	11	10	9	8	7	6	5	4	3	2	1	0
	reserved								PID3							
Type	RO	RO	RO	RO	RO	RO	RO	RO	RO	RO	RO	RO	RO	RO	RO	RO
Reset	0	0	0	0	0	0	0	0	0	0	0	0	0	0	0	1

Bit/Field	Name	Type	Reset	Description
31:8	reserved	RO	0x00	Software should not rely on the value of a reserved bit. To provide compatibility with future products, the value of a reserved bit should be preserved across a read-modify-write operation.
7:0	PID3	RO	0x01	GPIO Peripheral ID Register[31:24] Can be used by software to identify the presence of this peripheral.

Register 30: GPIO PrimeCell Identification 0 (GPIOPCellID0), offset 0xFF0

The **GPIOPCellID0**, **GPIOPCellID1**, **GPIOPCellID2**, and **GPIOPCellID3** registers are four 8-bit wide registers, that can conceptually be treated as one 32-bit register. The register is used as a standard cross-peripheral identification system.

GPIO PrimeCell Identification 0 (GPIOPCellID0)

GPIO Port A (APB) base: 0x4000.4000
GPIO Port A (AHB) base: 0x4005.8000
GPIO Port B (APB) base: 0x4000.5000
GPIO Port B (AHB) base: 0x4005.9000
GPIO Port C (APB) base: 0x4000.6000
GPIO Port C (AHB) base: 0x4005.A000
GPIO Port D (APB) base: 0x4000.7000
GPIO Port D (AHB) base: 0x4005.B000
GPIO Port E (APB) base: 0x4002.4000
GPIO Port E (AHB) base: 0x4005.C000
Offset 0xFF0
Type RO, reset 0x0000.000D

	31	30	29	28	27	26	25	24	23	22	21	20	19	18	17	16
	reserved															
Type	RO	RO	RO	RO	RO	RO	RO	RO	RO	RO	RO	RO	RO	RO	RO	RO
Reset	0	0	0	0	0	0	0	0	0	0	0	0	0	0	0	0

	15	14	13	12	11	10	9	8	7	6	5	4	3	2	1	0
	reserved								CID0							
Type	RO	RO	RO	RO	RO	RO	RO	RO	RO	RO	RO	RO	RO	RO	RO	RO
Reset	0	0	0	0	0	0	0	0	0	0	0	0	1	1	0	1

Bit/Field	Name	Type	Reset	Description
31:8	reserved	RO	0x00	Software should not rely on the value of a reserved bit. To provide compatibility with future products, the value of a reserved bit should be preserved across a read-modify-write operation.
7:0	CID0	RO	0x0D	GPIO PrimeCell ID Register[7:0] Provides software a standard cross-peripheral identification system.

Register 31: GPIO PrimeCell Identification 1 (GPIOPCellID1), offset 0xFF4

The **GPIOPCellID0**, **GPIOPCellID1**, **GPIOPCellID2**, and **GPIOPCellID3** registers are four 8-bit wide registers, that can conceptually be treated as one 32-bit register. The register is used as a standard cross-peripheral identification system.

GPIO PrimeCell Identification 1 (GPIOPCellID1)

GPIO Port A (APB) base: 0x4000.4000
GPIO Port A (AHB) base: 0x4005.8000
GPIO Port B (APB) base: 0x4000.5000
GPIO Port B (AHB) base: 0x4005.9000
GPIO Port C (APB) base: 0x4000.6000
GPIO Port C (AHB) base: 0x4005.A000
GPIO Port D (APB) base: 0x4000.7000
GPIO Port D (AHB) base: 0x4005.B000
GPIO Port E (APB) base: 0x4002.4000
GPIO Port E (AHB) base: 0x4005.C000
Offset 0xFF4
Type RO, reset 0x0000.00F0

	31	30	29	28	27	26	25	24	23	22	21	20	19	18	17	16
	reserved															
Type	RO	RO	RO	RO	RO	RO	RO	RO	RO	RO	RO	RO	RO	RO	RO	RO
Reset	0	0	0	0	0	0	0	0	0	0	0	0	0	0	0	0

	15	14	13	12	11	10	9	8	7	6	5	4	3	2	1	0
	reserved								CID1							
Type	RO	RO	RO	RO	RO	RO	RO	RO	RO	RO	RO	RO	RO	RO	RO	RO
Reset	0	0	0	0	0	0	0	0	1	1	1	1	0	0	0	0

Bit/Field	Name	Type	Reset	Description
31:8	reserved	RO	0x00	Software should not rely on the value of a reserved bit. To provide compatibility with future products, the value of a reserved bit should be preserved across a read-modify-write operation.
7:0	CID1	RO	0xF0	GPIO PrimeCell ID Register[15:8] Provides software a standard cross-peripheral identification system.

Register 32: GPIO PrimeCell Identification 2 (GPIOPCellID2), offset 0xFF8

The **GPIOPCellID0**, **GPIOPCellID1**, **GPIOPCellID2**, and **GPIOPCellID3** registers are four 8-bit wide registers, that can conceptually be treated as one 32-bit register. The register is used as a standard cross-peripheral identification system.

GPIO PrimeCell Identification 2 (GPIOPCellID2)

GPIO Port A (APB) base: 0x4000.4000
GPIO Port A (AHB) base: 0x4005.8000
GPIO Port B (APB) base: 0x4000.5000
GPIO Port B (AHB) base: 0x4005.9000
GPIO Port C (APB) base: 0x4000.6000
GPIO Port C (AHB) base: 0x4005.A000
GPIO Port D (APB) base: 0x4000.7000
GPIO Port D (AHB) base: 0x4005.B000
GPIO Port E (APB) base: 0x4002.4000
GPIO Port E (AHB) base: 0x4005.C000
Offset 0xFF8
Type RO, reset 0x0000.0005

	31	30	29	28	27	26	25	24	23	22	21	20	19	18	17	16
	reserved															
Type	RO	RO	RO	RO	RO	RO	RO	RO	RO	RO	RO	RO	RO	RO	RO	RO
Reset	0	0	0	0	0	0	0	0	0	0	0	0	0	0	0	0

	15	14	13	12	11	10	9	8	7	6	5	4	3	2	1	0
	reserved								CID2							
Type	RO	RO	RO	RO	RO	RO	RO	RO	RO	RO	RO	RO	RO	RO	RO	RO
Reset	0	0	0	0	0	0	0	0	0	0	0	0	0	1	0	1

Bit/Field	Name	Type	Reset	Description
31:8	reserved	RO	0x00	Software should not rely on the value of a reserved bit. To provide compatibility with future products, the value of a reserved bit should be preserved across a read-modify-write operation.
7:0	CID2	RO	0x05	GPIO PrimeCell ID Register[23:16] Provides software a standard cross-peripheral identification system.

Register 33: GPIO PrimeCell Identification 3 (GPIOPCellID3), offset 0xFFC

The **GPIOPCellID0**, **GPIOPCellID1**, **GPIOPCellID2**, and **GPIOPCellID3** registers are four 8-bit wide registers, that can conceptually be treated as one 32-bit register. The register is used as a standard cross-peripheral identification system.

GPIO PrimeCell Identification 3 (GPIOPCellID3)

GPIO Port A (APB) base: 0x4000.4000
GPIO Port A (AHB) base: 0x4005.8000
GPIO Port B (APB) base: 0x4000.5000
GPIO Port B (AHB) base: 0x4005.9000
GPIO Port C (APB) base: 0x4000.6000
GPIO Port C (AHB) base: 0x4005.A000
GPIO Port D (APB) base: 0x4000.7000
GPIO Port D (AHB) base: 0x4005.B000
GPIO Port E (APB) base: 0x4002.4000
GPIO Port E (AHB) base: 0x4005.C000
Offset 0xFFC
Type RO, reset 0x0000.00B1

	31	30	29	28	27	26	25	24	23	22	21	20	19	18	17	16
	reserved															
Type	RO	RO	RO	RO	RO	RO	RO	RO	RO	RO	RO	RO	RO	RO	RO	RO
Reset	0	0	0	0	0	0	0	0	0	0	0	0	0	0	0	0

	15	14	13	12	11	10	9	8	7	6	5	4	3	2	1	0
	reserved								CID3							
Type	RO	RO	RO	RO	RO	RO	RO	RO	RO	RO	RO	RO	RO	RO	RO	RO
Reset	0	0	0	0	0	0	0	0	1	0	1	1	0	0	0	1

Bit/Field	Name	Type	Reset	Description
31:8	reserved	RO	0x00	Software should not rely on the value of a reserved bit. To provide compatibility with future products, the value of a reserved bit should be preserved across a read-modify-write operation.
7:0	CID3	RO	0xB1	GPIO PrimeCell ID Register[31:24] Provides software a standard cross-peripheral identification system.

9 General-Purpose Timers

Programmable timers can be used to count or time external events that drive the Timer input pins. The Stellaris® General-Purpose Timer Module (GPTM) contains four GPTM blocks (Timer0, Timer1, Timer 2, and Timer 3). Each GPTM block provides two 16-bit timers/counters (referred to as TimerA and TimerB) that can be configured to operate independently as timers or event counters, or configured to operate as one 32-bit timer or one 32-bit Real-Time Clock (RTC).

In addition, timers can be used to trigger analog-to-digital conversions (ADC). The ADC trigger signals from all of the general-purpose timers are ORed together before reaching the ADC module, so only one timer should be used to trigger ADC events.

The GPT Module is one timing resource available on the Stellaris microcontrollers. Other timer resources include the System Timer (SysTick) (see 91) and the PWM timer in the PWM module (see “PWM Timer” on page 597).

The General-Purpose Timers provide the following features:

- Four General-Purpose Timer Modules (GPTM), each of which provides two 16-bit timers/counters. Each GPTM can be configured to operate independently:
  - As a single 32-bit timer
  - As one 32-bit Real-Time Clock (RTC) to event capture
  - For Pulse Width Modulation (PWM)
  - To trigger analog-to-digital conversions
- 32-bit Timer modes
  - Programmable one-shot timer
  - Programmable periodic timer
  - Real-Time Clock when using an external 32.768-KHz clock as the input
  - User-enabled stalling when the controller asserts CPU Halt flag during debug
  - ADC event trigger
- 16-bit Timer modes
  - General-purpose timer function with an 8-bit prescaler (for one-shot and periodic modes only)
  - Programmable one-shot timer
  - Programmable periodic timer
  - User-enabled stalling when the controller asserts CPU Halt flag during debug
  - ADC event trigger
- 16-bit Input Capture modes
  - Input edge count capture

- Input edge time capture

■ 16-bit PWM mode

- Simple PWM mode with software-programmable output inversion of the PWM signal

9.1 Block Diagram

Note: In Figure 9-1 on page 373, the specific CCP pins available depend on the Stellaris device. See Table 9-1 on page 373 for the available CCPs.

Figure 9-1. GPTM Module Block Diagram

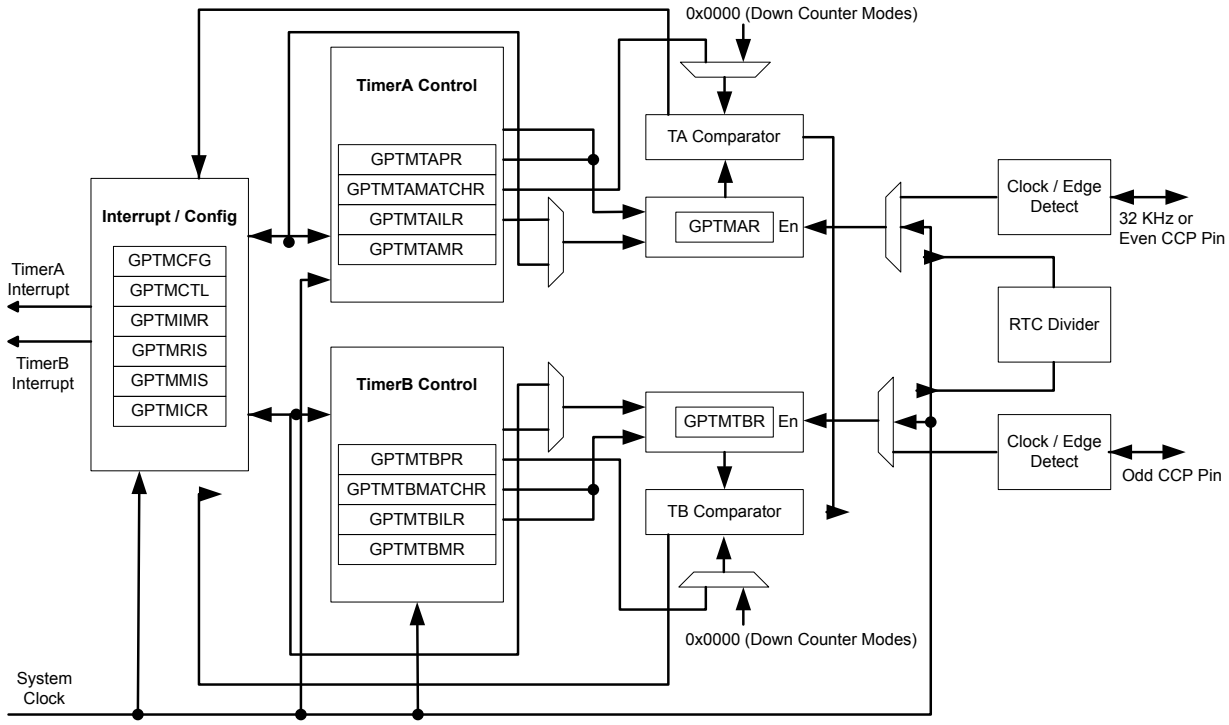

Table 9-1. Available CCP Pins

Timer	16-Bit Up/Down Counter	Even CCP Pin	Odd CCP Pin
Timer 0	TimerA	CCP0	-
	TimerB	-	CCP1
Timer 1	TimerA	-	-
	TimerB	-	-
Timer 2	TimerA	-	-
	TimerB	-	-
Timer 3	TimerA	-	-
	TimerB	-	-

9.2 Signal Description

Table 9-2 on page 374 lists the external signals of the GP Timer module and describes the function of each. The GP Timer signals are alternate functions for some GPIO signals and default to be GPIO signals at reset. The column in the table below titled "Pin Assignment" lists the possible GPIO pin placements for these GP Timer signals. The AFSEL bit in the **GPIO Alternate Function Select (GPIOAFSEL)** register (page 344) should be set to choose the GP Timer function. For more information on configuring GPIOs, see “General-Purpose Input/Outputs (GPIOs)” on page 324.

Table 9-2. General-Purpose Timers Signals (64LQFP)

Pin Name	Pin Number	Pin Type	Buffer Type[a]	Description
CCP0	15	I/O	TTL	Capture/Compare/PWM 0.
CCP1	14	I/O	TTL	Capture/Compare/PWM 1.

a. The TTL designation indicates the pin has TTL-compatible voltage levels.

9.3 Functional Description

The main components of each GPTM block are two free-running 16-bit up/down counters (referred to as TimerA and TimerB), two 16-bit match registers, and two 16-bit load/initialization registers and their associated control functions. The exact functionality of each GPTM is controlled by software and configured through the register interface.

Software configures the GPTM using the **GPTM Configuration (GPTMCFG)** register (see page 384), the **GPTM TimerA Mode (GPTMTAMR)** register (see page 385), and the **GPTM TimerB Mode (GPTMTBMR)** register (see page 387). When in one of the 32-bit modes, the timer can only act as a 32-bit timer. However, when configured in 16-bit mode, the GPTM can have its two 16-bit timers configured in any combination of the 16-bit modes.

9.3.1 GPTM Reset Conditions

After reset has been applied to the GPTM module, the module is in an inactive state, and all control registers are cleared and in their default states. Counters TimerA and TimerB are initialized to 0xFFFF, along with their corresponding load registers: the **GPTM TimerA Interval Load (GPTMTAILR)** register (see page 398) and the **GPTM TimerB Interval Load (GPTMTBILR)** register (see page 399). The prescale counters are initialized to 0x00: the **GPTM TimerA Prescale (GPTMTAPR)** register (see page 402) and the **GPTM TimerB Prescale (GPTMTBPR)** register (see page 403).

9.3.2 32-Bit Timer Operating Modes

This section describes the three GPTM 32-bit timer modes (One-Shot, Periodic, and RTC) and their configuration.

The GPTM is placed into 32-bit mode by writing a 0 (One-Shot/Periodic 32-bit timer mode) or a 1 (RTC mode) to the **GPTM Configuration (GPTMCFG)** register. In both configurations, certain GPTM registers are concatenated to form pseudo 32-bit registers. These registers include:

- **GPTM TimerA Interval Load (GPTMTAILR)** register [15:0], see page 398
- **GPTM TimerB Interval Load (GPTMTBILR)** register [15:0], see page 399
- **GPTM TimerA (GPTMTAR)** register [15:0], see page 404
- **GPTM TimerB (GPTMTBR)** register [15:0], see page 405

In the 32-bit modes, the GPTM translates a 32-bit write access to **GPTMTAILR** into a write access to both **GPTMTAILR** and **GPTMTBILR**. The resulting word ordering for such a write operation is:

```
GPTMTBILR[15:0]:GPTMTAILR[15:0]
```

Likewise, a read access to **GPTMTAR** returns the value:

```
GPTMTBR[15:0]:GPTMTAR[15:0]
```

9.3.2.1 32-Bit One-Shot/Periodic Timer Mode

In 32-bit one-shot and periodic timer modes, the concatenated versions of the TimerA and TimerB registers are configured as a 32-bit down-counter. The selection of one-shot or periodic mode is determined by the value written to the `TAMR` field of the **GPTM TimerA Mode (GPTMTAMR)** register (see page 385), and there is no need to write to the **GPTM TimerB Mode (GPTMTBMR)** register.

When software writes the `TAEN` bit in the **GPTM Control (GPTMCTL)** register (see page 389), the timer begins counting down from its preloaded value. Once the 0x0000.0000 state is reached, the timer reloads its start value from the concatenated **GPTMTAILR** on the next cycle. If configured to be a one-shot timer, the timer stops counting and clears the `TAEN` bit in the **GPTMCTL** register. If configured as a periodic timer, it continues counting.

In addition to reloading the count value, the GPTM generates interrupts and triggers when it reaches the 0x000.0000 state. The GPTM sets the `TATORIS` bit in the **GPTM Raw Interrupt Status (GPTMRIS)** register (see page 394), and holds it until it is cleared by writing the **GPTM Interrupt Clear (GPTMICR)** register (see page 396). If the time-out interrupt is enabled in the **GPTM Interrupt Mask (GPTMIMR)** register (see page 392), the GPTM also sets the `TATOMIS` bit in the **GPTM Masked Interrupt Status (GPTMMIS)** register (see page 395). The ADC trigger is enabled by setting the `TAOTE` bit in **GPTMCTL**.

If software reloads the **GPTMTAILR** register while the counter is running, the counter loads the new value on the next clock cycle and continues counting from the new value.

If the `TASTALL` bit in the **GPTMCTL** register is set, the timer freezes counting while the processor is halted by the debugger. The timer resumes counting when the processor resumes execution.

9.3.2.2 32-Bit Real-Time Clock Timer Mode

In Real-Time Clock (RTC) mode, the concatenated versions of the TimerA and TimerB registers are configured as a 32-bit up-counter. When RTC mode is selected for the first time, the counter is loaded with a value of 0x0000.0001. All subsequent load values must be written to the **GPTM TimerA Match (GPTMTAMATCHR)** register (see page 400) by the controller.

The input clock on an even CCP input is required to be 32.768 KHz in RTC mode. The clock signal is then divided down to a 1 Hz rate and is passed along to the input of the 32-bit counter.

When software writes the `TAEN` bit inthe **GPTMCTL** register, the counter starts counting up from its preloaded value of 0x0000.0001. When the current count value matches the preloaded value in the **GPTMTAMATCHR** register, it rolls over to a value of 0x0000.0000 and continues counting until either a hardware reset, or it is disabled by software (clearing the `TAEN` bit). When a match occurs, the GPTM asserts the `RTCRIS` bit in **GPTMRIS**. If the RTC interrupt is enabled in **GPTMIMR**, the GPTM also sets the `RTCMIS` bit in **GPTMMIS** and generates a controller interrupt. The status flags are cleared by writing the `RTCCINT` bit in **GPTMICR**.

If the `TASTALL` and/or `TBSTALL` bits in the **GPTMCTL** register are set, the timer does not freeze if the `RTCEN` bit is set in **GPTMCTL**.

9.3.3 16-Bit Timer Operating Modes

The GPTM is placed into global 16-bit mode by writing a value of 0x4 to the **GPTM Configuration (GPTMCFG)** register (see page 384). This section describes each of the GPTM 16-bit modes of operation. TimerA and TimerB have identical modes, so a single description is given using an **n** to reference both.

9.3.3.1 16-Bit One-Shot/Periodic Timer Mode

In 16-bit one-shot and periodic timer modes, the timer is configured as a 16-bit down-counter with an optional 8-bit prescaler that effectively extends the counting range of the timer to 24 bits. The selection of one-shot or periodic mode is determined by the value written to the `TnMR` field of the **GPTMTnMR** register. The optional prescaler is loaded into the **GPTM Timern Prescale (GPTMTnPR)** register.

When software writes the `TnEN` bit in the **GPTMCTL** register, the timer begins counting down from its preloaded value. Once the 0x0000 state is reached, the timer reloads its start value from **GPTMTnILR** and **GPTMTnPR** on the next cycle. If configured to be a one-shot timer, the timer stops counting and clears the `TnEN` bit in the **GPTMCTL** register. If configured as a periodic timer, it continues counting.

In addition to reloading the count value, the timer generates interrupts and triggers when it reaches the 0x0000 state. The GPTM sets the `TnTORIS` bit in the **GPTMRIS** register, and holds it until it is cleared by writing the **GPTMICR** register. If the time-out interrupt is enabled in **GPTMIMR**, the GPTM also sets the `TnTOMIS` bit in **GPTMISR** and generates a controller interrupt. The ADC trigger is enabled by setting the `TnOTE` bit in the **GPTMCTL** register.

If software reloads the **GPTMTAILR** register while the counter is running, the counter loads the new value on the next clock cycle and continues counting from the new value.

If the `TnSTALL` bit in the **GPTMCTL** register is set, the timer freezes counting while the processor is halted by the debugger. The timer resumes counting when the processor resumes execution.

The following example shows a variety of configurations for a 16-bit free running timer while using the prescaler. All values assume a 50-MHz clock with Tc=20 ns (clock period).

Table 9-3. 16-Bit Timer With Prescaler Configurations

Prescale	#Clock (T c)[a]	Max Time	Units
00000000	1	1.3107	mS
00000001	2	2.6214	mS
00000010	3	3.9322	mS
----------	--	--	--
11111101	254	332.9229	mS
11111110	255	334.2336	mS
11111111	256	335.5443	mS

a. Tc is the clock period.

9.3.3.2 16-Bit Input Edge Count Mode

Note: For rising-edge detection, the input signal must be High for at least two system clock periods following the rising edge. Similarly, for falling-edge detection, the input signal must be Low for at least two system clock periods following the falling edge. Based on this criteria, the maximum input frequency for edge detection is 1/4 of the system frequency.

Note: The prescaler is not available in 16-Bit Input Edge Count mode.

In Edge Count mode, the timer is configured as a down-counter capable of capturing three types of events: rising edge, falling edge, or both. To place the timer in Edge Count mode, the `TnCMR` bit of the **GPTMTnMR** register must be set to 0. The type of edge that the timer counts is determined by the `TnEVENT` fields of the **GPTMCTL** register. During initialization, the **GPTM Timern Match (GPTMTnMATCHR)** register is configured so that the difference between the value in the **GPTMTnILR** register and the **GPTMTnMATCHR** register equals the number of edge events that must be counted.

When software writes the `TnEN` bit in the **GPTM Control (GPTMCTL)** register, the timer is enabled for event capture. Each input event on the `CCP` pin decrements the counter by 1 until the event count matches **GPTMTnMATCHR**. When the counts match, the GPTM asserts the `CnMRIS` bit in the **GPTMRIS** register (and the `CnMMIS` bit, if the interrupt is not masked).

The counter is then reloaded using the value in **GPTMTnILR**, and stopped since the GPTM automatically clears the `TnEN` bit in the **GPTMCTL** register. Once the event count has been reached, all further events are ignored until `TnEN` is re-enabled by software.

Figure 9-2 on page 377 shows how input edge count mode works. In this case, the timer start value is set to **GPTMTnILR** =0x000A and the match value is set to **GPTMTnMATCHR** =0x0006 so that four edge events are counted. The counter is configured to detect both edges of the input signal.

Note that the last two edges are not counted since the timer automatically clears the `TnEN` bit after the current count matches the value in the **GPTMTnMATCHR** register.

Figure 9-2. 16-Bit Input Edge Count Mode Example

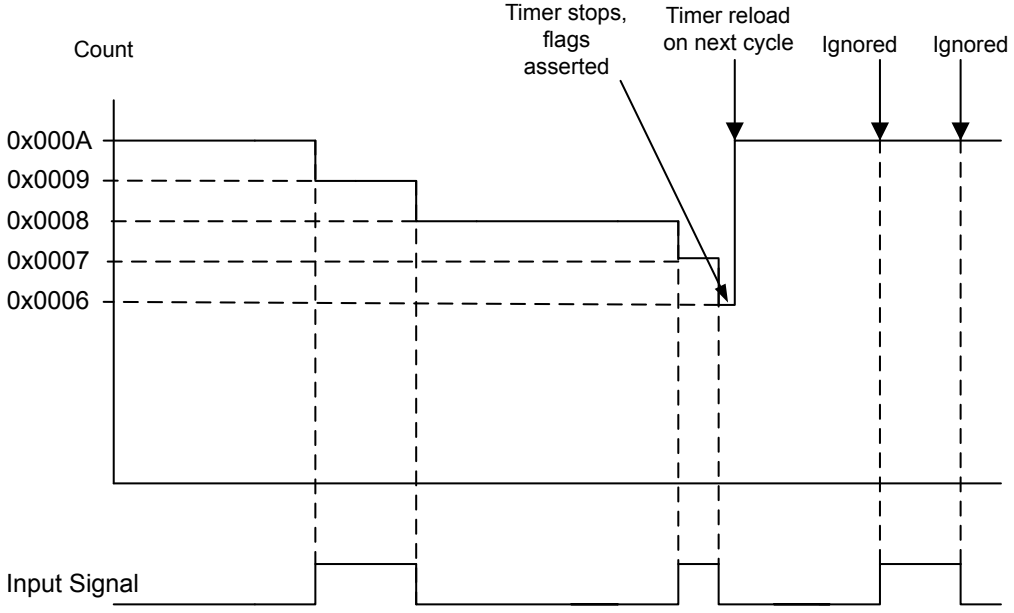

9.3.3.3 16-Bit Input Edge Time Mode

Note: For rising-edge detection, the input signal must be High for at least two system clock periods following the rising edge. Similarly, for falling edge detection, the input signal must be Low for at least two system clock periods following the falling edge. Based on this criteria, the maximum input frequency for edge detection is 1/4 of the system frequency.

Note: The prescaler is not available in 16-Bit Input Edge Time mode.

In Edge Time mode, the timer is configured as a free-running down-counter initialized to the value loaded in the **GPTMTnILR** register (or 0xFFFF at reset). The timer is capable of capturing three types of events: rising edge, falling edge, or both. The timer is placed into Edge Time mode by setting the `TnCMR` bit in the **GPTMTnMR** register, and the type of event that the timer captures is determined by the `TnEVENT` fields of the **GPTMCTL** register.

When software writes the `TnEN` bit in the **GPTMCTL** register, the timer is enabled for event capture. When the selected input event is detected, the current Tn counter value is captured in the **GPTMTnR** register and is available to be read by the controller. The GPTM then asserts the `CnERIS` bit (and the `CnEMIS` bit, if the interrupt is not masked).

After an event has been captured, the timer does not stop counting. It continues to count until the `TnEN` bit is cleared. When the timer reaches the 0x0000 state, it is reloaded with the value from the **GPTMTnILR** register.

Figure 9-3 on page 378 shows how input edge timing mode works. In the diagram, it is assumed that the start value of the timer is the default value of 0xFFFF, and the timer is configured to capture rising edge events.

Each time a rising edge event is detected, the current count value is loaded into the **GPTMTnR** register, and is held there until another rising edge is detected (at which point the new count value is loaded into **GPTMTnR**).

Figure 9-3. 16-Bit Input Edge Time Mode Example

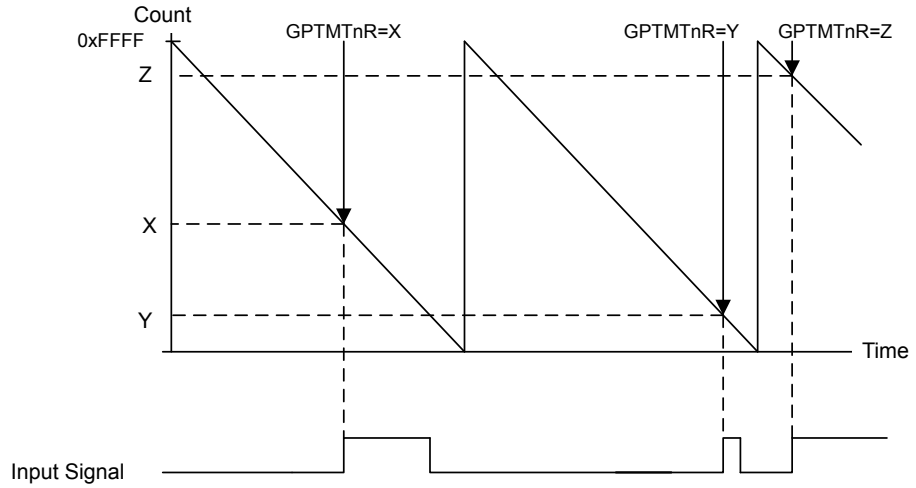

9.3.3.4 16-Bit PWM Mode

Note: The prescaler is not available in 16-Bit PWM mode.

The GPTM supports a simple PWM generation mode. In PWM mode, the timer is configured as a down-counter with a start value (and thus period) defined by **GPTMTnILR**. In this mode, the PWM frequency and period are synchronous events and therefore guaranteed to be glitch free. PWM mode is enabled with the **GPTMTnMR** register by setting the `TnAMS` bit to 0x1, the `TnCMR` bit to 0x0, and the `TnMR` field to 0x2.

When software writes the `TnEN` bit in the **GPTMCTL** register, the counter begins counting down until it reaches the 0x0000 state. On the next counter cycle, the counter reloads its start value from

GPTMTnILR and continues counting until disabled by software clearing the TnEN bit in the **GPTMCTL** register. No interrupts or status bits are asserted in PWM mode.

The output PWM signal asserts when the counter is at the value of the **GPTMTnILR** register (its start state), and is deasserted when the counter value equals the value in the **GPTM Timern Match Register (GPTMTnMATCHR)**. Software has the capability of inverting the output PWM signal by setting the TnPWML bit in the **GPTMCTL** register.

Figure 9-4 on page 379 shows how to generate an output PWM with a 1-ms period and a 66% duty cycle assuming a 50-MHz input clock and **TnPWML** =0 (duty cycle would be 33% for the **TnPWML** =1 configuration). For this example, the start value is **GPTMTnIRL**=0xC350 and the match value is **GPTMTnMATCHR**=0x411A.

Figure 9-4. 16-Bit PWM Mode Example

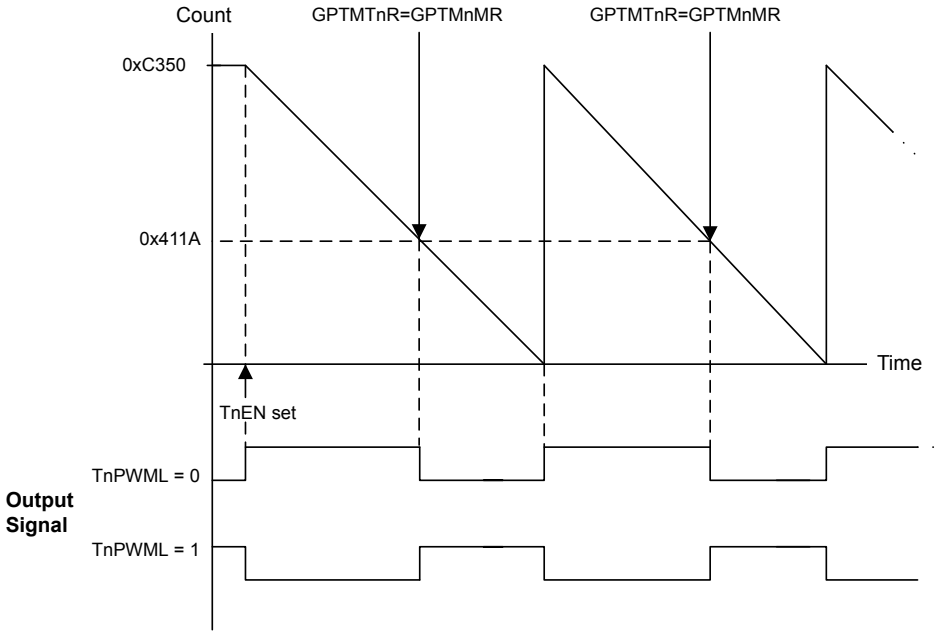

9.4 Initialization and Configuration

To use the general-purpose timers, the peripheral clock must be enabled by setting the TIMER0, TIMER1, TIMER2, and TIMER3 bits in the **RCGC1** register.

This section shows module initialization and configuration examples for each of the supported timer modes.

9.4.1 32-Bit One-Shot/Periodic Timer Mode

The GPTM is configured for 32-bit One-Shot and Periodic modes by the following sequence:

1. Ensure the timer is disabled (the TAEN bit in the **GPTMCTL** register is cleared) before making any changes.
2. Write the **GPTM Configuration Register (GPTMCFG)** with a value of 0x0.

3. Set the TAMR field in the **GPTM TimerA Mode Register (GPTMTAMR)**:
   a. Write a value of 0x1 for One-Shot mode.
   b. Write a value of 0x2 for Periodic mode.
4. Load the start value into the **GPTM TimerA Interval Load Register (GPTMTAILR)**.
5. If interrupts are required, set the TATOIM bit in the **GPTM Interrupt Mask Register (GPTMIMR)**.
6. Set the TAEN bit in the **GPTMCTL** register to enable the timer and start counting.
7. Poll the TATORIS bit in the **GPTMRIS** register or wait for the interrupt to be generated (if enabled). In both cases, the status flags are cleared by writing a 1 to the TATOCINT bit of the **GPTM Interrupt Clear Register (GPTMICR)**.

In One-Shot mode, the timer stops counting after step 7 on page 380. To re-enable the timer, repeat the sequence. A timer configured in Periodic mode does not stop counting after it times out.

9.4.2 32-Bit Real-Time Clock (RTC) Mode

To use the RTC mode, the timer must have a 32.768-KHz input signal on an even CCP input. To enable the RTC feature, follow these steps:

1. Ensure the timer is disabled (the TAEN bit is cleared) before making any changes.
2. Write the **GPTM Configuration Register (GPTMCFG)** with a value of 0x1.
3. Write the desired match value to the **GPTM TimerA Match Register (GPTMTAMATCHR)**.
4. Set/clear the RTCEN bit in the **GPTM Control Register (GPTMCTL)** as desired.
5. If interrupts are required, set the RTCIM bit in the **GPTM Interrupt Mask Register (GPTMIMR)**.
6. Set the TAEN bit in the **GPTMCTL** register to enable the timer and start counting.

When the timer count equals the value in the **GPTMTAMATCHR** register, the GPTM asserts the RTCRIS bit in the **GPTMRIS** register and continues counting until Timer A is disabled or a hardware reset. The interrupt is cleared by writing the RTCCINT bit in the **GPTMICR** register.

9.4.3 16-Bit One-Shot/Periodic Timer Mode

A timer is configured for 16-bit One-Shot and Periodic modes by the following sequence:

1. Ensure the timer is disabled (the TnEN bit is cleared) before making any changes.
2. Write the **GPTM Configuration Register (GPTMCFG)** with a value of 0x4.
3. Set the TnMR field in the **GPTM Timer Mode (GPTMTnMR)** register:
   a. Write a value of 0x1 for One-Shot mode.
   b. Write a value of 0x2 for Periodic mode.
4. If a prescaler is to be used, write the prescale value to the **GPTM Timern Prescale Register (GPTMTnPR)**.

5. Load the start value into the **GPTM Timer Interval Load Register (GPTMTnILR)**.
6. If interrupts are required, set the `TnTOIM` bit in the **GPTM Interrupt Mask Register (GPTMIMR)**.
7. Set the `TnEN` bit in the **GPTM Control Register (GPTMCTL)** to enable the timer and start counting.
8. Poll the `TnTORIS` bit in the **GPTMRIS** register or wait for the interrupt to be generated (if enabled). In both cases, the status flags are cleared by writing a 1 to the `TnTOCINT` bit of the **GPTM Interrupt Clear Register (GPTMICR)**.

In One-Shot mode, the timer stops counting after step 8 on page 381. To re-enable the timer, repeat the sequence. A timer configured in Periodic mode does not stop counting after it times out.

9.4.4 16-Bit Input Edge Count Mode

A timer is configured to Input Edge Count mode by the following sequence:

1. Ensure the timer is disabled (the `TnEN` bit is cleared) before making any changes.
2. Write the **GPTM Configuration (GPTMCFG)** register with a value of 0x4.
3. In the **GPTM Timer Mode (GPTMTnMR)** register, write the `TnCMR` field to 0x0 and the `TnMR` field to 0x3.
4. Configure the type of event(s) that the timer captures by writing the `TnEVENT` field of the **GPTM Control (GPTMCTL)** register.
5. Load the timer start value into the **GPTM Timern Interval Load (GPTMTnILR)** register.
6. Load the desired event count into the **GPTM Timern Match (GPTMTnMATCHR)** register.
7. If interrupts are required, set the `CnMIM` bit in the **GPTM Interrupt Mask (GPTMIMR)** register.
8. Set the `TnEN` bit in the **GPTMCTL** register to enable the timer and begin waiting for edge events.
9. Poll the `CnMRIS` bit in the **GPTMRIS** register or wait for the interrupt to be generated (if enabled). In both cases, the status flags are cleared by writing a 1 to the `CnMCINT` bit of the **GPTM Interrupt Clear (GPTMICR)** register.

In Input Edge Count Mode, the timer stops after the desired number of edge events has been detected. To re-enable the timer, ensure that the `TnEN` bit is cleared and repeat step 4 on page 381 through step 9 on page 381.

9.4.5 16-Bit Input Edge Timing Mode

A timer is configured to Input Edge Timing mode by the following sequence:

1. Ensure the timer is disabled (the `TnEN` bit is cleared) before making any changes.
2. Write the **GPTM Configuration (GPTMCFG)** register with a value of 0x4.
3. In the **GPTM Timer Mode (GPTMTnMR)** register, write the `TnCMR` field to 0x1 and the `TnMR` field to 0x3.

4. Configure the type of event that the timer captures by writing the `TnEVENT` field of the **GPTM Control (GPTMCTL)** register.
5. Load the timer start value into the **GPTM Timern Interval Load (GPTMTnILR)** register.
6. If interrupts are required, set the `CnEIM` bit in the **GPTM Interrupt Mask (GPTMIMR)** register.
7. Set the `TnEN` bit in the **GPTM Control (GPTMCTL)** register to enable the timer and start counting.
8. Poll the `CnERIS` bit in the **GPTMRIS** register or wait for the interrupt to be generated (if enabled). In both cases, the status flags are cleared by writing a 1 to the `CnECINT` bit of the **GPTM Interrupt Clear (GPTMICR)** register. The time at which the event happened can be obtained by reading the **GPTM Timern (GPTMTnR)** register.

In Input Edge Timing mode, the timer continues running after an edge event has been detected, but the timer interval can be changed at any time by writing the **GPTMTnILR** register. The change takes effect at the next cycle after the write.

9.4.6 16-Bit PWM Mode

A timer is configured to PWM mode using the following sequence:

1. Ensure the timer is disabled (the `TnEN` bit is cleared) before making any changes.
2. Write the **GPTM Configuration (GPTMCFG)** register with a value of 0x4.
3. In the **GPTM Timer Mode (GPTMTnMR)** register, set the `TnAMS` bit to 0x1, the `TnCMR` bit to 0x0, and the `TnMR` field to 0x2.
4. Configure the output state of the PWM signal (whether or not it is inverted) in the `TnPWML` field of the **GPTM Control (GPTMCTL)** register.
5. Load the timer start value into the **GPTM Timern Interval Load (GPTMTnILR)** register.
6. Load the **GPTM Timern Match (GPTMTnMATCHR)** register with the desired value.
7. Set the `TnEN` bit in the **GPTM Control (GPTMCTL)** register to enable the timer and begin generation of the output PWM signal.

In PWM Timing mode, the timer continues running after the PWM signal has been generated. The PWM period can be adjusted at any time by writing the **GPTMTnILR** register, and the change takes effect at the next cycle after the write.

9.5 Register Map

Table 9-4 on page 383 lists the GPTM registers. The offset listed is a hexadecimal increment to the register's address, relative to that timer's base address:

- Timer0: 0x4003.0000
- Timer1: 0x4003.1000
- Timer2: 0x4003.2000
- Timer3: 0x4003.3000

Note that the Timer module clock must be enabled before the registers can be programmed (see page 218). There must be a delay of 3 system clocks after the Timer module clock is enabled before any Timer module registers are accessed.

Table 9-4. Timers Register Map

Offset	Name	Type	Reset	Description	See page
0x000	GPTMCFG	R/W	0x0000.0000	GPTM Configuration	384
0x004	GPTMTAMR	R/W	0x0000.0000	GPTM TimerA Mode	385
0x008	GPTMTBMR	R/W	0x0000.0000	GPTM TimerB Mode	387
0x00C	GPTMCTL	R/W	0x0000.0000	GPTM Control	389
0x018	GPTMIMR	R/W	0x0000.0000	GPTM Interrupt Mask	392
0x01C	GPTMRIS	RO	0x0000.0000	GPTM Raw Interrupt Status	394
0x020	GPTMMIS	RO	0x0000.0000	GPTM Masked Interrupt Status	395
0x024	GPTMICR	W1C	0x0000.0000	GPTM Interrupt Clear	396
0x028	GPTMTAILR	R/W	0xFFFF.FFFF	GPTM TimerA Interval Load	398
0x02C	GPTMTBILR	R/W	0x0000.FFFF	GPTM TimerB Interval Load	399
0x030	GPTMTAMATCHR	R/W	0xFFFF.FFFF	GPTM TimerA Match	400
0x034	GPTMTBMATCHR	R/W	0x0000.FFFF	GPTM TimerB Match	401
0x038	GPTMTAPR	R/W	0x0000.0000	GPTM TimerA Prescale	402
0x03C	GPTMTBPR	R/W	0x0000.0000	GPTM TimerB Prescale	403
0x048	GPTMTAR	RO	0xFFFF.FFFF	GPTM TimerA	404
0x04C	GPTMTBR	RO	0x0000.FFFF	GPTM TimerB	405

9.6 Register Descriptions

The remainder of this section lists and describes the GPTM registers, in numerical order by address offset.

Register 1: GPTM Configuration (GPTMCFG), offset 0x000

This register configures the global operation of the GPTM module. The value written to this register determines whether the GPTM is in 32- or 16-bit mode.

GPTM Configuration (GPTMCFG)

Timer0 base: 0x4003.0000
Timer1 base: 0x4003.1000
Timer2 base: 0x4003.2000
Timer3 base: 0x4003.3000
Offset 0x000
Type R/W, reset 0x0000.0000

	31	30	29	28	27	26	25	24	23	22	21	20	19	18	17	16
	reserved															
Type	RO	RO	RO	RO	RO	RO	RO	RO	RO	RO	RO	RO	RO	RO	RO	RO
Reset	0	0	0	0	0	0	0	0	0	0	0	0	0	0	0	0

	15	14	13	12	11	10	9	8	7	6	5	4	3	2	1	0
	reserved													GPTMCFG		
Type	RO	RO	RO	RO	RO	RO	RO	RO	RO	RO	RO	RO	RO	R/W	R/W	R/W
Reset	0	0	0	0	0	0	0	0	0	0	0	0	0	0	0	0

Bit/Field	Name	Type	Reset	Description
31:3	reserved	RO	0x00	Software should not rely on the value of a reserved bit. To provide compatibility with future products, the value of a reserved bit should be preserved across a read-modify-write operation.
2:0	GPTMCFG	R/W	0x0	GPTM Configuration The `GPTMCFG` values are defined as follows: Value — Description 0x0 — 32-bit timer configuration. 0x1 — 32-bit real-time clock (RTC) counter configuration. 0x2 — Reserved 0x3 — Reserved 0x4-0x7 — 16-bit timer configuration, function is controlled by bits 1:0 of **GPTMTAMR** and **GPTMTBMR**.

Register 2: GPTM TimerA Mode (GPTMTAMR), offset 0x004

This register configures the GPTM based on the configuration selected in the **GPTMCFG** register. When in 16-bit PWM mode, set the TAAMS bit to 0x1, the TACMR bit to 0x0, and the TAMR field to 0x2.

GPTM TimerA Mode (GPTMTAMR)

Timer0 base: 0x4003.0000
Timer1 base: 0x4003.1000
Timer2 base: 0x4003.2000
Timer3 base: 0x4003.3000
Offset 0x004
Type R/W, reset 0x0000.0000

	31	30	29	28	27	26	25	24	23	22	21	20	19	18	17	16
	reserved															
Type	RO	RO	RO	RO	RO	RO	RO	RO	RO	RO	RO	RO	RO	RO	RO	RO
Reset	0	0	0	0	0	0	0	0	0	0	0	0	0	0	0	0

	15	14	13	12	11	10	9	8	7	6	5	4	3	2	1	0
	reserved												TAAMS	TACMR	TAMR	
Type	RO	RO	RO	RO	RO	RO	RO	RO	RO	RO	RO	RO	R/W	R/W	R/W	R/W
Reset	0	0	0	0	0	0	0	0	0	0	0	0	0	0	0	0

Bit/Field	Name	Type	Reset	Description
31:4	reserved	RO	0x00	Software should not rely on the value of a reserved bit. To provide compatibility with future products, the value of a reserved bit should be preserved across a read-modify-write operation.
3	TAAMS	R/W	0	GPTM TimerA Alternate Mode Select The TAAMS values are defined as follows: Value Description 0 Capture mode is enabled. 1 PWM mode is enabled. **Note:** To enable PWM mode, you must also clear the TACMR bit and set the TAMR field to 0x2.
2	TACMR	R/W	0	GPTM TimerA Capture Mode The TACMR values are defined as follows: Value Description 0 Edge-Count mode 1 Edge-Time mode

Bit/Field	Name	Type	Reset	Description
1:0	TAMR	R/W	0x0	GPTM TimerA Mode The `TAMR` values are defined as follows: Value Description 0x0 Reserved 0x1 One-Shot Timer mode 0x2 Periodic Timer mode 0x3 Capture mode The Timer mode is based on the timer configuration defined by bits 2:0 in the **GPTMCFG** register (16-or 32-bit). In 16-bit timer configuration, `TAMR` controls the 16-bit timer modes for TimerA. In 32-bit timer configuration, this register controls the mode and the contents of **GPTMTBMR** are ignored.

Register 3: GPTM TimerB Mode (GPTMTBMR), offset 0x008

This register configures the GPTM based on the configuration selected in the **GPTMCFG** register. When in 16-bit PWM mode, set the TBAMS bit to 0x1, the TBCMR bit to 0x0, and the TBMR field to 0x2.

GPTM TimerB Mode (GPTMTBMR)

Timer0 base: 0x4003.0000
Timer1 base: 0x4003.1000
Timer2 base: 0x4003.2000
Timer3 base: 0x4003.3000
Offset 0x008
Type R/W, reset 0x0000.0000

	31	30	29	28	27	26	25	24	23	22	21	20	19	18	17	16
	reserved															
Type	RO	RO	RO	RO	RO	RO	RO	RO	RO	RO	RO	RO	RO	RO	RO	RO
Reset	0	0	0	0	0	0	0	0	0	0	0	0	0	0	0	0

	15	14	13	12	11	10	9	8	7	6	5	4	3	2	1	0
	reserved												TBAMS	TBCMR	TBMR	
Type	RO	RO	RO	RO	RO	RO	RO	RO	RO	RO	RO	RO	R/W	R/W	R/W	R/W
Reset	0	0	0	0	0	0	0	0	0	0	0	0	0	0	0	0

Bit/Field	Name	Type	Reset	Description
31:4	reserved	RO	0x00	Software should not rely on the value of a reserved bit. To provide compatibility with future products, the value of a reserved bit should be preserved across a read-modify-write operation.
3	TBAMS	R/W	0	GPTM TimerB Alternate Mode Select The TBAMS values are defined as follows: Value Description 0 Capture mode is enabled. 1 PWM mode is enabled. **Note:** To enable PWM mode, you must also clear the TBCMR bit and set the TBMR field to 0x2.
2	TBCMR	R/W	0	GPTM TimerB Capture Mode The TBCMR values are defined as follows: Value Description 0 Edge-Count mode 1 Edge-Time mode

Bit/Field	Name	Type	Reset	Description
1:0	TBMR	R/W	0x0	GPTM TimerB Mode The `TBMR` values are defined as follows: Value Description 0x0 Reserved 0x1 One-Shot Timer mode 0x2 Periodic Timer mode 0x3 Capture mode The timer mode is based on the timer configuration defined by bits 2:0 in the **GPTMCFG** register. In 16-bit timer configuration, these bits control the 16-bit timer modes for TimerB. In 32-bit timer configuration, this register's contents are ignored and **GPTMTAMR** is used.

Register 4: GPTM Control (GPTMCTL), offset 0x00C

This register is used alongside the **GPTMCFG** and **GMTMTnMR** registers to fine-tune the timer configuration, and to enable other features such as timer stall and the output trigger. The output trigger can be used to initiate transfers on the ADC module.

GPTM Control (GPTMCTL)

Timer0 base: 0x4003.0000
Timer1 base: 0x4003.1000
Timer2 base: 0x4003.2000
Timer3 base: 0x4003.3000
Offset 0x00C
Type R/W, reset 0x0000.0000

	31	30	29	28	27	26	25	24	23	22	21	20	19	18	17	16
	reserved															
Type	RO	RO	RO	RO	RO	RO	RO	RO	RO	RO	RO	RO	RO	RO	RO	RO
Reset	0	0	0	0	0	0	0	0	0	0	0	0	0	0	0	0

	15	14	13	12	11	10	9	8	7	6	5	4	3	2	1	0
	reserved	TBPWML	TBOTE	reserved	TBEVENT		TBSTALL	TBEN	reserved	TAPWML	TAOTE	RTCEN	TAEVENT		TASTALL	TAEN
Type	RO	R/W	R/W	RO	R/W	R/W	R/W	R/W	RO	R/W	R/W	R/W	R/W	R/W	R/W	R/W
Reset	0	0	0	0	0	0	0	0	0	0	0	0	0	0	0	0

Bit/Field	Name	Type	Reset	Description
31:15	reserved	RO	0x00	Software should not rely on the value of a reserved bit. To provide compatibility with future products, the value of a reserved bit should be preserved across a read-modify-write operation.
14	TBPWML	R/W	0	GPTM TimerB PWM Output Level The `TBPWML` values are defined as follows: Value Description 0 Output is unaffected. 1 Output is inverted.
13	TBOTE	R/W	0	GPTM TimerB Output Trigger Enable The `TBOTE` values are defined as follows: Value Description 0 The output TimerB ADC trigger is disabled. 1 The output TimerB ADC trigger is enabled. In addition, the ADC must be enabled and the timer selected as a trigger source with the `EMn` bit in the **ADCEMUX** register (see page 445).
12	reserved	RO	0	Software should not rely on the value of a reserved bit. To provide compatibility with future products, the value of a reserved bit should be preserved across a read-modify-write operation.

Bit/Field	Name	Type	Reset	Description
11:10	TBEVENT	R/W	0x0	GPTM TimerB Event Mode The TBEVENT values are defined as follows: Value Description 0x0 Positive edge 0x1 Negative edge 0x2 Reserved 0x3 Both edges
9	TBSTALL	R/W	0	GPTM Timer B Stall Enable The TBSTALL values are defined as follows: Value Description 0 Timer B continues counting while the processor is halted by the debugger. 1 Timer B freezes counting while the processor is halted by the debugger. If the processor is executing normally, the TBSTALL bit is ignored.
8	TBEN	R/W	0	GPTM TimerB Enable The TBEN values are defined as follows: Value Description 0 TimerB is disabled. 1 TimerB is enabled and begins counting or the capture logic is enabled based on the **GPTMCFG** register.
7	reserved	RO	0	Software should not rely on the value of a reserved bit. To provide compatibility with future products, the value of a reserved bit should be preserved across a read-modify-write operation.
6	TAPWML	R/W	0	GPTM TimerA PWM Output Level The TAPWML values are defined as follows: Value Description 0 Output is unaffected. 1 Output is inverted.
5	TAOTE	R/W	0	GPTM TimerA Output Trigger Enable The TAOTE values are defined as follows: Value Description 0 The output TimerA ADC trigger is disabled. 1 The output TimerA ADC trigger is enabled. In addition, the ADC must be enabled and the timer selected as a trigger source with the EMn bit in the **ADCEMUX** register (see page 445).

Bit/Field	Name	Type	Reset	Description
4	RTCEN	R/W	0	GPTM RTC Enable The RTCEN values are defined as follows: Value Description 0 RTC counting is disabled. 1 RTC counting is enabled.
3:2	TAEVENT	R/W	0x0	GPTM TimerA Event Mode The TAEVENT values are defined as follows: Value Description 0x0 Positive edge 0x1 Negative edge 0x2 Reserved 0x3 Both edges
1	TASTALL	R/W	0	GPTM Timer A Stall Enable The TASTALL values are defined as follows: Value Description 0 Timer A continues counting while the processor is halted by the debugger. 1 Timer A freezes counting while the processor is halted by the debugger. If the processor is executing normally, the TASTALL bit is ignored.
0	TAEN	R/W	0	GPTM TimerA Enable The TAEN values are defined as follows: Value Description 0 TimerA is disabled. 1 TimerA is enabled and begins counting or the capture logic is enabled based on the **GPTMCFG** register.

Register 5: GPTM Interrupt Mask (GPTMIMR), offset 0x018

This register allows software to enable/disable GPTM controller-level interrupts. Writing a 1 enables the interrupt, while writing a 0 disables it.

GPTM Interrupt Mask (GPTMIMR)

Timer0 base: 0x4003.0000
Timer1 base: 0x4003.1000
Timer2 base: 0x4003.2000
Timer3 base: 0x4003.3000
Offset 0x018
Type R/W, reset 0x0000.0000

	31	30	29	28	27	26	25	24	23	22	21	20	19	18	17	16
	reserved															
Type	RO	RO	RO	RO	RO	RO	RO	RO	RO	RO	RO	RO	RO	RO	RO	RO
Reset	0	0	0	0	0	0	0	0	0	0	0	0	0	0	0	0

	15	14	13	12	11	10	9	8	7	6	5	4	3	2	1	0
	reserved					CBEIM	CBMIM	TBTOIM	reserved				RTCIM	CAEIM	CAMIM	TATOIM
Type	RO	RO	RO	RO	RO	R/W	R/W	R/W	RO	RO	RO	RO	R/W	R/W	R/W	R/W
Reset	0	0	0	0	0	0	0	0	0	0	0	0	0	0	0	0

Bit/Field	Name	Type	Reset	Description
31:11	reserved	RO	0x00	Software should not rely on the value of a reserved bit. To provide compatibility with future products, the value of a reserved bit should be preserved across a read-modify-write operation.
10	CBEIM	R/W	0	GPTM CaptureB Event Interrupt Mask The `CBEIM` values are defined as follows: Value Description 0 Interrupt is disabled. 1 Interrupt is enabled.
9	CBMIM	R/W	0	GPTM CaptureB Match Interrupt Mask The `CBMIM` values are defined as follows: Value Description 0 Interrupt is disabled. 1 Interrupt is enabled.
8	TBTOIM	R/W	0	GPTM TimerB Time-Out Interrupt Mask The `TBTOIM` values are defined as follows: Value Description 0 Interrupt is disabled. 1 Interrupt is enabled.
7:4	reserved	RO	0	Software should not rely on the value of a reserved bit. To provide compatibility with future products, the value of a reserved bit should be preserved across a read-modify-write operation.

Bit/Field	Name	Type	Reset	Description
3	RTCIM	R/W	0	GPTM RTC Interrupt Mask The `RTCIM` values are defined as follows: Value Description 0 Interrupt is disabled. 1 Interrupt is enabled.
2	CAEIM	R/W	0	GPTM CaptureA Event Interrupt Mask The `CAEIM` values are defined as follows: Value Description 0 Interrupt is disabled. 1 Interrupt is enabled.
1	CAMIM	R/W	0	GPTM CaptureA Match Interrupt Mask The `CAMIM` values are defined as follows: Value Description 0 Interrupt is disabled. 1 Interrupt is enabled.
0	TATOIM	R/W	0	GPTM TimerA Time-Out Interrupt Mask The `TATOIM` values are defined as follows: Value Description 0 Interrupt is disabled. 1 Interrupt is enabled.

Register 6: GPTM Raw Interrupt Status (GPTMRIS), offset 0x01C

This register shows the state of the GPTM's internal interrupt signal. These bits are set whether or not the interrupt is masked in the **GPTMIMR** register. Each bit can be cleared by writing a 1 to its corresponding bit in **GPTMICR**.

GPTM Raw Interrupt Status (GPTMRIS)

Timer0 base: 0x4003.0000
Timer1 base: 0x4003.1000
Timer2 base: 0x4003.2000
Timer3 base: 0x4003.3000
Offset 0x01C
Type RO, reset 0x0000.0000

	31	30	29	28	27	26	25	24	23	22	21	20	19	18	17	16
	reserved															
Type	RO	RO	RO	RO	RO	RO	RO	RO	RO	RO	RO	RO	RO	RO	RO	RO
Reset	0	0	0	0	0	0	0	0	0	0	0	0	0	0	0	0

	15	14	13	12	11	10	9	8	7	6	5	4	3	2	1	0
	reserved					CBERIS	CBMRIS	TBTORIS	reserved				RTCRIS	CAERIS	CAMRIS	TATORIS
Type	RO	RO	RO	RO	RO	RO	RO	RO	RO	RO	RO	RO	RO	RO	RO	RO
Reset	0	0	0	0	0	0	0	0	0	0	0	0	0	0	0	0

Bit/Field	Name	Type	Reset	Description
31:11	reserved	RO	0x00	Software should not rely on the value of a reserved bit. To provide compatibility with future products, the value of a reserved bit should be preserved across a read-modify-write operation.
10	CBERIS	RO	0	GPTM CaptureB Event Raw Interrupt This is the CaptureB Event interrupt status prior to masking.
9	CBMRIS	RO	0	GPTM CaptureB Match Raw Interrupt This is the CaptureB Match interrupt status prior to masking.
8	TBTORIS	RO	0	GPTM TimerB Time-Out Raw Interrupt This is the TimerB time-out interrupt status prior to masking.
7:4	reserved	RO	0x0	Software should not rely on the value of a reserved bit. To provide compatibility with future products, the value of a reserved bit should be preserved across a read-modify-write operation.
3	RTCRIS	RO	0	GPTM RTC Raw Interrupt This is the RTC Event interrupt status prior to masking.
2	CAERIS	RO	0	GPTM CaptureA Event Raw Interrupt This is the CaptureA Event interrupt status prior to masking.
1	CAMRIS	RO	0	GPTM CaptureA Match Raw Interrupt This is the CaptureA Match interrupt status prior to masking.
0	TATORIS	RO	0	GPTM TimerA Time-Out Raw Interrupt This the TimerA time-out interrupt status prior to masking.

Register 7: GPTM Masked Interrupt Status (GPTMMIS), offset 0x020

This register show the state of the GPTM's controller-level interrupt. If an interrupt is unmasked in **GPTMIMR**, and there is an event that causes the interrupt to be asserted, the corresponding bit is set in this register. All bits are cleared by writing a 1 to the corresponding bit in **GPTMICR**.

GPTM Masked Interrupt Status (GPTMMIS)

Timer0 base: 0x4003.0000
Timer1 base: 0x4003.1000
Timer2 base: 0x4003.2000
Timer3 base: 0x4003.3000
Offset 0x020
Type RO, reset 0x0000.0000

	31	30	29	28	27	26	25	24	23	22	21	20	19	18	17	16
	reserved															
Type	RO	RO	RO	RO	RO	RO	RO	RO	RO	RO	RO	RO	RO	RO	RO	RO
Reset	0	0	0	0	0	0	0	0	0	0	0	0	0	0	0	0

	15	14	13	12	11	10	9	8	7	6	5	4	3	2	1	0
	reserved					CBEMIS	CBMMIS	TBTOMIS	reserved				RTCMIS	CAEMIS	CAMMIS	TATOMIS
Type	RO	RO	RO	RO	RO	RO	RO	RO	RO	RO	RO	RO	RO	RO	RO	RO
Reset	0	0	0	0	0	0	0	0	0	0	0	0	0	0	0	0

Bit/Field	Name	Type	Reset	Description
31:11	reserved	RO	0x00	Software should not rely on the value of a reserved bit. To provide compatibility with future products, the value of a reserved bit should be preserved across a read-modify-write operation.
10	CBEMIS	RO	0	GPTM CaptureB Event Masked Interrupt This is the CaptureB event interrupt status after masking.
9	CBMMIS	RO	0	GPTM CaptureB Match Masked Interrupt This is the CaptureB match interrupt status after masking.
8	TBTOMIS	RO	0	GPTM TimerB Time-Out Masked Interrupt This is the TimerB time-out interrupt status after masking.
7:4	reserved	RO	0x0	Software should not rely on the value of a reserved bit. To provide compatibility with future products, the value of a reserved bit should be preserved across a read-modify-write operation.
3	RTCMIS	RO	0	GPTM RTC Masked Interrupt This is the RTC event interrupt status after masking.
2	CAEMIS	RO	0	GPTM CaptureA Event Masked Interrupt This is the CaptureA event interrupt status after masking.
1	CAMMIS	RO	0	GPTM CaptureA Match Masked Interrupt This is the CaptureA match interrupt status after masking.
0	TATOMIS	RO	0	GPTM TimerA Time-Out Masked Interrupt This is the TimerA time-out interrupt status after masking.

Register 8: GPTM Interrupt Clear (GPTMICR), offset 0x024

This register is used to clear the status bits in the **GPTMRIS** and **GPTMMIS** registers. Writing a 1 to a bit clears the corresponding bit in the **GPTMRIS** and **GPTMMIS** registers.

GPTM Interrupt Clear (GPTMICR)

Timer0 base: 0x4003.0000
Timer1 base: 0x4003.1000
Timer2 base: 0x4003.2000
Timer3 base: 0x4003.3000
Offset 0x024
Type W1C, reset 0x0000.0000

	31	30	29	28	27	26	25	24	23	22	21	20	19	18	17	16
	reserved															
Type	RO	RO	RO	RO	RO	RO	RO	RO	RO	RO	RO	RO	RO	RO	RO	RO
Reset	0	0	0	0	0	0	0	0	0	0	0	0	0	0	0	0

	15	14	13	12	11	10	9	8	7	6	5	4	3	2	1	0
	reserved					CBECINT	CBMCINT	TBTOCINT	reserved				RTCCINT	CAECINT	CAMCINT	TATOCINT
Type	RO	RO	RO	RO	RO	W1C	W1C	W1C	RO	RO	RO	RO	W1C	W1C	W1C	W1C
Reset	0	0	0	0	0	0	0	0	0	0	0	0	0	0	0	0

Bit/Field	Name	Type	Reset	Description
31:11	reserved	RO	0x00	Software should not rely on the value of a reserved bit. To provide compatibility with future products, the value of a reserved bit should be preserved across a read-modify-write operation.
10	CBECINT	W1C	0	GPTM CaptureB Event Interrupt Clear The `CBECINT` values are defined as follows: Value Description 0 The interrupt is unaffected. 1 The interrupt is cleared.
9	CBMCINT	W1C	0	GPTM CaptureB Match Interrupt Clear The `CBMCINT` values are defined as follows: Value Description 0 The interrupt is unaffected. 1 The interrupt is cleared.
8	TBTOCINT	W1C	0	GPTM TimerB Time-Out Interrupt Clear The `TBTOCINT` values are defined as follows: Value Description 0 The interrupt is unaffected. 1 The interrupt is cleared.
7:4	reserved	RO	0x0	Software should not rely on the value of a reserved bit. To provide compatibility with future products, the value of a reserved bit should be preserved across a read-modify-write operation.

Bit/Field	Name	Type	Reset	Description
3	RTCCINT	W1C	0	GPTM RTC Interrupt Clear The `RTCCINT` values are defined as follows: Value Description 0 The interrupt is unaffected. 1 The interrupt is cleared.
2	CAECINT	W1C	0	GPTM CaptureA Event Interrupt Clear The `CAECINT` values are defined as follows: Value Description 0 The interrupt is unaffected. 1 The interrupt is cleared.
1	CAMCINT	W1C	0	GPTM CaptureA Match Interrupt Clear The `CAMCINT` values are defined as follows: Value Description 0 The interrupt is unaffected. 1 The interrupt is cleared.
0	TATOCINT	W1C	0	GPTM TimerA Time-Out Interrupt Clear The `TATOCINT` values are defined as follows: Value Description 0 The interrupt is unaffected. 1 The interrupt is cleared.

Register 9: GPTM TimerA Interval Load (GPTMTAILR), offset 0x028

This register is used to load the starting count value into the timer. When GPTM is configured to one of the 32-bit modes, **GPTMTAILR** appears as a 32-bit register (the upper 16-bits correspond to the contents of the **GPTM TimerB Interval Load (GPTMTBILR)** register). In 16-bit mode, the upper 16 bits of this register read as 0s and have no effect on the state of **GPTMTBILR**.

GPTM TimerA Interval Load (GPTMTAILR)

Timer0 base: 0x4003.0000
Timer1 base: 0x4003.1000
Timer2 base: 0x4003.2000
Timer3 base: 0x4003.3000
Offset 0x028
Type R/W, reset 0xFFFF.FFFF

	31	30	29	28	27	26	25	24	23	22	21	20	19	18	17	16
	TAILRH															
Type	R/W	R/W	R/W	R/W	R/W	R/W	R/W	R/W	R/W	R/W	R/W	R/W	R/W	R/W	R/W	R/W
Reset	1	1	1	1	1	1	1	1	1	1	1	1	1	1	1	1

	15	14	13	12	11	10	9	8	7	6	5	4	3	2	1	0
	TAILRL															
Type	R/W	R/W	R/W	R/W	R/W	R/W	R/W	R/W	R/W	R/W	R/W	R/W	R/W	R/W	R/W	R/W
Reset	1	1	1	1	1	1	1	1	1	1	1	1	1	1	1	1

Bit/Field	Name	Type	Reset	Description
31:16	TAILRH	R/W	0xFFFF	GPTM TimerA Interval Load Register High When configured for 32-bit mode via the **GPTMCFG** register, the **GPTM TimerB Interval Load (GPTMTBILR)** register loads this value on a write. A read returns the current value of **GPTMTBILR**. In 16-bit mode, this field reads as 0 and does not have an effect on the state of **GPTMTBILR**.
15:0	TAILRL	R/W	0xFFFF	GPTM TimerA Interval Load Register Low For both 16- and 32-bit modes, writing this field loads the counter for TimerA. A read returns the current value of **GPTMTAILR**.

Register 10: GPTM TimerB Interval Load (GPTMTBILR), offset 0x02C

This register is used to load the starting count value into TimerB. When the GPTM is configured to a 32-bit mode, **GPTMTBILR** returns the current value of TimerB and ignores writes.

GPTM TimerB Interval Load (GPTMTBILR)

Timer0 base: 0x4003.0000
Timer1 base: 0x4003.1000
Timer2 base: 0x4003.2000
Timer3 base: 0x4003.3000
Offset 0x02C
Type R/W, reset 0x0000.FFFF

	31	30	29	28	27	26	25	24	23	22	21	20	19	18	17	16
	reserved															
Type	RO	RO	RO	RO	RO	RO	RO	RO	RO	RO	RO	RO	RO	RO	RO	RO
Reset	0	0	0	0	0	0	0	0	0	0	0	0	0	0	0	0

	15	14	13	12	11	10	9	8	7	6	5	4	3	2	1	0
	TBILRL															
Type	R/W	R/W	R/W	R/W	R/W	R/W	R/W	R/W	R/W	R/W	R/W	R/W	R/W	R/W	R/W	R/W
Reset	1	1	1	1	1	1	1	1	1	1	1	1	1	1	1	1

Bit/Field	Name	Type	Reset	Description
31:16	reserved	RO	0x0000	Software should not rely on the value of a reserved bit. To provide compatibility with future products, the value of a reserved bit should be preserved across a read-modify-write operation.
15:0	TBILRL	R/W	0xFFFF	GPTM TimerB Interval Load Register When the GPTM is not configured as a 32-bit timer, a write to this field updates **GPTMTBILR**. In 32-bit mode, writes are ignored, and reads return the current value of **GPTMTBILR**.

Register 11: GPTM TimerA Match (GPTMTAMATCHR), offset 0x030

This register is used in 32-bit Real-Time Clock mode and 16-bit PWM and Input Edge Count modes.

GPTM TimerA Match (GPTMTAMATCHR)

Timer0 base: 0x4003.0000
Timer1 base: 0x4003.1000
Timer2 base: 0x4003.2000
Timer3 base: 0x4003.3000
Offset 0x030
Type R/W, reset 0xFFFF.FFFF

	31	30	29	28	27	26	25	24	23	22	21	20	19	18	17	16
	TAMRH															
Type	R/W	R/W	R/W	R/W	R/W	R/W	R/W	R/W	R/W	R/W	R/W	R/W	R/W	R/W	R/W	R/W
Reset	1	1	1	1	1	1	1	1	1	1	1	1	1	1	1	1

	15	14	13	12	11	10	9	8	7	6	5	4	3	2	1	0
	TAMRL															
Type	R/W	R/W	R/W	R/W	R/W	R/W	R/W	R/W	R/W	R/W	R/W	R/W	R/W	R/W	R/W	R/W
Reset	1	1	1	1	1	1	1	1	1	1	1	1	1	1	1	1

Bit/Field	Name	Type	Reset	Description
31:16	TAMRH	R/W	0xFFFF	GPTM TimerA Match Register High When configured for 32-bit Real-Time Clock (RTC) mode via the **GPTMCFG** register, this value is compared to the upper half of **GPTMTAR**, to determine match events. In 16-bit mode, this field reads as 0 and does not have an effect on the state of **GPTMTBMATCHR**.
15:0	TAMRL	R/W	0xFFFF	GPTM TimerA Match Register Low When configured for 32-bit Real-Time Clock (RTC) mode via the **GPTMCFG** register, this value is compared to the lower half of **GPTMTAR**, to determine match events. When configured for PWM mode, this value along with **GPTMTAILR**, determines the duty cycle of the output PWM signal. When configured for Edge Count mode, this value along with **GPTMTAILR**, determines how many edge events are counted. The total number of edge events counted is equal to the value in **GPTMTAILR** minus this value.

Register 12: GPTM TimerB Match (GPTMTBMATCHR), offset 0x034

This register is used in 16-bit PWM and Input Edge Count modes.

GPTM TimerB Match (GPTMTBMATCHR)

Timer0 base: 0x4003.0000
Timer1 base: 0x4003.1000
Timer2 base: 0x4003.2000
Timer3 base: 0x4003.3000
Offset 0x034
Type R/W, reset 0x0000.FFFF

	31	30	29	28	27	26	25	24	23	22	21	20	19	18	17	16
	reserved															
Type	RO	RO	RO	RO	RO	RO	RO	RO	RO	RO	RO	RO	RO	RO	RO	RO
Reset	0	0	0	0	0	0	0	0	0	0	0	0	0	0	0	0

	15	14	13	12	11	10	9	8	7	6	5	4	3	2	1	0
	TBMRL															
Type	R/W	R/W	R/W	R/W	R/W	R/W	R/W	R/W	R/W	R/W	R/W	R/W	R/W	R/W	R/W	R/W
Reset	1	1	1	1	1	1	1	1	1	1	1	1	1	1	1	1

Bit/Field	Name	Type	Reset	Description
31:16	reserved	RO	0x0000	Software should not rely on the value of a reserved bit. To provide compatibility with future products, the value of a reserved bit should be preserved across a read-modify-write operation.
15:0	TBMRL	R/W	0xFFFF	GPTM TimerB Match Register Low When configured for PWM mode, this value along with **GPTMTBILR**, determines the duty cycle of the output PWM signal. When configured for Edge Count mode, this value along with **GPTMTBILR**, determines how many edge events are counted. The total number of edge events counted is equal to the value in **GPTMTBILR** minus this value.

Register 13: GPTM TimerA Prescale (GPTMTAPR), offset 0x038

This register allows software to extend the range of the 16-bit timers when operating in one-shot or periodic mode.

GPTM TimerA Prescale (GPTMTAPR)

Timer0 base: 0x4003.0000
Timer1 base: 0x4003.1000
Timer2 base: 0x4003.2000
Timer3 base: 0x4003.3000
Offset 0x038
Type R/W, reset 0x0000.0000

	31	30	29	28	27	26	25	24	23	22	21	20	19	18	17	16
	reserved															
Type	RO	RO	RO	RO	RO	RO	RO	RO	RO	RO	RO	RO	RO	RO	RO	RO
Reset	0	0	0	0	0	0	0	0	0	0	0	0	0	0	0	0

	15	14	13	12	11	10	9	8	7	6	5	4	3	2	1	0
	reserved								TAPSR							
Type	RO	RO	RO	RO	RO	RO	RO	RO	R/W	R/W	R/W	R/W	R/W	R/W	R/W	R/W
Reset	0	0	0	0	0	0	0	0	0	0	0	0	0	0	0	0

Bit/Field	Name	Type	Reset	Description
31:8	reserved	RO	0x00	Software should not rely on the value of a reserved bit. To provide compatibility with future products, the value of a reserved bit should be preserved across a read-modify-write operation.
7:0	TAPSR	R/W	0x00	GPTM TimerA Prescale The register loads this value on a write. A read returns the current value of the register. Refer to Table 9-3 on page 376 for more details and an example.

Register 14: GPTM TimerB Prescale (GPTMTBPR), offset 0x03C

This register allows software to extend the range of the 16-bit timers when operating in one-shot or periodic mode.

GPTM TimerB Prescale (GPTMTBPR)

Timer0 base: 0x4003.0000
Timer1 base: 0x4003.1000
Timer2 base: 0x4003.2000
Timer3 base: 0x4003.3000
Offset 0x03C
Type R/W, reset 0x0000.0000

	31	30	29	28	27	26	25	24	23	22	21	20	19	18	17	16
	reserved															
Type	RO	RO	RO	RO	RO	RO	RO	RO	RO	RO	RO	RO	RO	RO	RO	RO
Reset	0	0	0	0	0	0	0	0	0	0	0	0	0	0	0	0

	15	14	13	12	11	10	9	8	7	6	5	4	3	2	1	0
	reserved								TBPSR							
Type	RO	RO	RO	RO	RO	RO	RO	RO	R/W	R/W	R/W	R/W	R/W	R/W	R/W	R/W
Reset	0	0	0	0	0	0	0	0	0	0	0	0	0	0	0	0

Bit/Field	Name	Type	Reset	Description
31:8	reserved	RO	0x00	Software should not rely on the value of a reserved bit. To provide compatibility with future products, the value of a reserved bit should be preserved across a read-modify-write operation.
7:0	TBPSR	R/W	0x00	GPTM TimerB Prescale The register loads this value on a write. A read returns the current value of this register. Refer to Table 9-3 on page 376 for more details and an example.

Register 15: GPTM TimerA (GPTMTAR), offset 0x048

This register shows the current value of the TimerA counter in all cases except for Input Edge Count mode. When in this mode, this register contains the number of edges that have occurred.

GPTM TimerA (GPTMTAR)

Timer0 base: 0x4003.0000
Timer1 base: 0x4003.1000
Timer2 base: 0x4003.2000
Timer3 base: 0x4003.3000
Offset 0x048
Type RO, reset 0xFFFF.FFFF

	31	30	29	28	27	26	25	24	23	22	21	20	19	18	17	16
	TARH															
Type	RO	RO	RO	RO	RO	RO	RO	RO	RO	RO	RO	RO	RO	RO	RO	RO
Reset	1	1	1	1	1	1	1	1	1	1	1	1	1	1	1	1

	15	14	13	12	11	10	9	8	7	6	5	4	3	2	1	0
	TARL															
Type	RO	RO	RO	RO	RO	RO	RO	RO	RO	RO	RO	RO	RO	RO	RO	RO
Reset	1	1	1	1	1	1	1	1	1	1	1	1	1	1	1	1

Bit/Field	Name	Type	Reset	Description
31:16	TARH	RO	0xFFFF	GPTM TimerA Register High If the **GPTMCFG** is in a 32-bit mode, TimerB value is read. If the **GPTMCFG** is in a 16-bit mode, this is read as zero.
15:0	TARL	RO	0xFFFF	GPTM TimerA Register Low A read returns the current value of the **GPTM TimerA Count Register**, except in Input Edge-Count mode, when it returns the number of edges that have occurred.

Register 16: GPTM TimerB (GPTMTBR), offset 0x04C

This register shows the current value of the TimerB counter in all cases except for Input Edge Count mode. When in this mode, this register contains the number of edges that have occurred.

GPTM TimerB (GPTMTBR)

Timer0 base: 0x4003.0000
Timer1 base: 0x4003.1000
Timer2 base: 0x4003.2000
Timer3 base: 0x4003.3000
Offset 0x04C
Type RO, reset 0x0000.FFFF

	31	30	29	28	27	26	25	24	23	22	21	20	19	18	17	16
	reserved															
Type	RO	RO	RO	RO	RO	RO	RO	RO	RO	RO	RO	RO	RO	RO	RO	RO
Reset	0	0	0	0	0	0	0	0	0	0	0	0	0	0	0	0

	15	14	13	12	11	10	9	8	7	6	5	4	3	2	1	0
	TBRL															
Type	RO	RO	RO	RO	RO	RO	RO	RO	RO	RO	RO	RO	RO	RO	RO	RO
Reset	1	1	1	1	1	1	1	1	1	1	1	1	1	1	1	1

Bit/Field	Name	Type	Reset	Description
31:16	reserved	RO	0x0000	Software should not rely on the value of a reserved bit. To provide compatibility with future products, the value of a reserved bit should be preserved across a read-modify-write operation.
15:0	TBRL	RO	0xFFFF	GPTM TimerB A read returns the current value of the **GPTM TimerB Count Register**, except in Input Edge-Count mode, when it returns the number of edges that have occurred.

10 Watchdog Timer

A watchdog timer can generate nonmaskable interrupts (NMIs) or a reset when a time-out value is reached. The watchdog timer is used to regain control when a system has failed due to a software error or due to the failure of an external device to respond in the expected way.

The Stellaris® Watchdog Timer module has the following features:

- 32-bit down counter with a programmable load register
- Separate watchdog clock with an enable
- Programmable interrupt generation logic with interrupt masking
- Lock register protection from runaway software
- Reset generation logic with an enable/disable
- User-enabled stalling when the controller asserts the CPU Halt flag during debug

The Watchdog Timer can be configured to generate an interrupt to the controller on its first time-out, and to generate a reset signal on its second time-out. Once the Watchdog Timer has been configured, the lock register can be written to prevent the timer configuration from being inadvertently altered.

10.1 Block Diagram

Figure 10-1. WDT Module Block Diagram

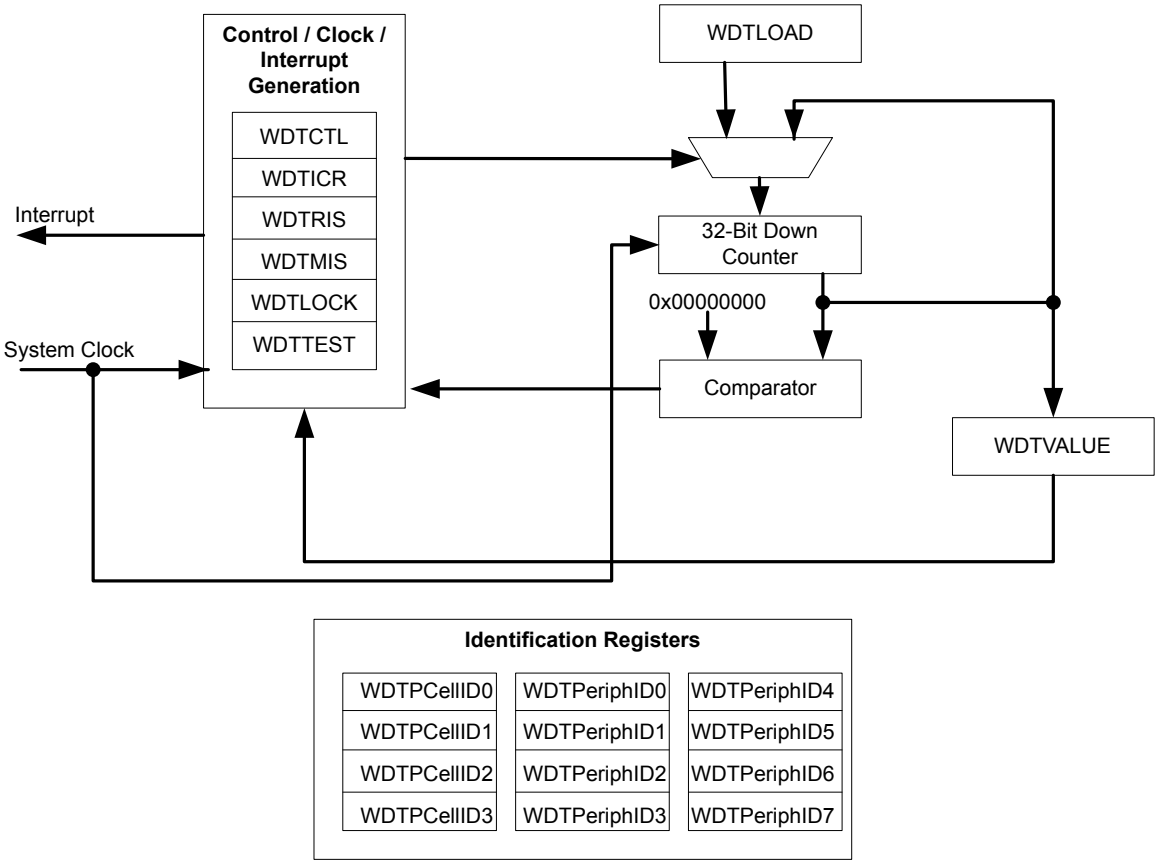

10.2 Functional Description

The Watchdog Timer module generates the first time-out signal when the 32-bit counter reaches the zero state after being enabled; enabling the counter also enables the watchdog timer interrupt. After the first time-out event, the 32-bit counter is re-loaded with the value of the **Watchdog Timer Load (WDTLOAD)** register, and the timer resumes counting down from that value. Once the Watchdog Timer has been configured, the **Watchdog Timer Lock (WDTLOCK)** register is written, which prevents the timer configuration from being inadvertently altered by software.

If the timer counts down to its zero state again before the first time-out interrupt is cleared, and the reset signal has been enabled (via the `WatchdogResetEnable` function), the Watchdog timer asserts its reset signal to the system. If the interrupt is cleared before the 32-bit counter reaches its second time-out, the 32-bit counter is loaded with the value in the **WDTLOAD** register, and counting resumes from that value.

If **WDTLOAD** is written with a new value while the Watchdog Timer counter is counting, then the counter is loaded with the new value and continues counting.

Writing to **WDTLOAD** does not clear an active interrupt. An interrupt must be specifically cleared by writing to the **Watchdog Interrupt Clear (WDTICR)** register.

The Watchdog module interrupt and reset generation can be enabled or disabled as required. When the interrupt is re-enabled, the 32-bit counter is preloaded with the load register value and not its last state.

10.3 Initialization and Configuration

To use the WDT, its peripheral clock must be enabled by setting the `WDT` bit in the **RCGC0** register. The Watchdog Timer is configured using the following sequence:

1. Load the **WDTLOAD** register with the desired timer load value.
2. If the Watchdog is configured to trigger system resets, set the `RESEN` bit in the **WDTCTL** register.
3. Set the `INTEN` bit in the **WDTCTL** register to enable the Watchdog and lock the control register.

If software requires that all of the watchdog registers are locked, the Watchdog Timer module can be fully locked by writing any value to the **WDTLOCK** register. To unlock the Watchdog Timer, write a value of 0x1ACC.E551.

10.4 Register Map

Table 10-1 on page 408 lists the Watchdog registers. The offset listed is a hexadecimal increment to the register's address, relative to the Watchdog Timer base address of 0x4000.0000.

Table 10-1. Watchdog Timer Register Map

Offset	Name	Type	Reset	Description	See page
0x000	WDTLOAD	R/W	0xFFFF.FFFF	Watchdog Load	410
0x004	WDTVALUE	RO	0xFFFF.FFFF	Watchdog Value	411
0x008	WDTCTL	R/W	0x0000.0000	Watchdog Control	412
0x00C	WDTICR	WO	-	Watchdog Interrupt Clear	413
0x010	WDTRIS	RO	0x0000.0000	Watchdog Raw Interrupt Status	414
0x014	WDTMIS	RO	0x0000.0000	Watchdog Masked Interrupt Status	415
0x418	WDTTEST	R/W	0x0000.0000	Watchdog Test	416
0xC00	WDTLOCK	R/W	0x0000.0000	Watchdog Lock	417
0xFD0	WDTPeriphID4	RO	0x0000.0000	Watchdog Peripheral Identification 4	418
0xFD4	WDTPeriphID5	RO	0x0000.0000	Watchdog Peripheral Identification 5	419
0xFD8	WDTPeriphID6	RO	0x0000.0000	Watchdog Peripheral Identification 6	420
0xFDC	WDTPeriphID7	RO	0x0000.0000	Watchdog Peripheral Identification 7	421
0xFE0	WDTPeriphID0	RO	0x0000.0005	Watchdog Peripheral Identification 0	422
0xFE4	WDTPeriphID1	RO	0x0000.0018	Watchdog Peripheral Identification 1	423
0xFE8	WDTPeriphID2	RO	0x0000.0018	Watchdog Peripheral Identification 2	424

Table 10-1. Watchdog Timer Register Map *(continued)*

Offset	Name	Type	Reset	Description	See page
0xFEC	WDTPeriphID3	RO	0x0000.0001	Watchdog Peripheral Identification 3	425
0xFF0	WDTPCellID0	RO	0x0000.000D	Watchdog PrimeCell Identification 0	426
0xFF4	WDTPCellID1	RO	0x0000.00F0	Watchdog PrimeCell Identification 1	427
0xFF8	WDTPCellID2	RO	0x0000.0005	Watchdog PrimeCell Identification 2	428
0xFFC	WDTPCellID3	RO	0x0000.00B1	Watchdog PrimeCell Identification 3	429

10.5 Register Descriptions

The remainder of this section lists and describes the WDT registers, in numerical order by address offset.

Register 1: Watchdog Load (WDTLOAD), offset 0x000

This register is the 32-bit interval value used by the 32-bit counter. When this register is written, the value is immediately loaded and the counter restarts counting down from the new value. If the **WDTLOAD** register is loaded with 0x0000.0000, an interrupt is immediately generated.

Watchdog Load (WDTLOAD)

Base 0x4000.0000
Offset 0x000
Type R/W, reset 0xFFFF.FFFF

	31	30	29	28	27	26	25	24	23	22	21	20	19	18	17	16
	WDTLoad															
Type	R/W	R/W	R/W	R/W	R/W	R/W	R/W	R/W	R/W	R/W	R/W	R/W	R/W	R/W	R/W	R/W
Reset	1	1	1	1	1	1	1	1	1	1	1	1	1	1	1	1

	15	14	13	12	11	10	9	8	7	6	5	4	3	2	1	0
	WDTLoad															
Type	R/W	R/W	R/W	R/W	R/W	R/W	R/W	R/W	R/W	R/W	R/W	R/W	R/W	R/W	R/W	R/W
Reset	1	1	1	1	1	1	1	1	1	1	1	1	1	1	1	1

Bit/Field	Name	Type	Reset	Description
31:0	WDTLoad	R/W	0xFFFF.FFFF	Watchdog Load Value

Register 2: Watchdog Value (WDTVALUE), offset 0x004

This register contains the current count value of the timer.

Watchdog Value (WDTVALUE)

Base 0x4000.0000
Offset 0x004
Type RO, reset 0xFFFF.FFFF

	31	30	29	28	27	26	25	24	23	22	21	20	19	18	17	16
	WDTValue															
Type	RO	RO	RO	RO	RO	RO	RO	RO	RO	RO	RO	RO	RO	RO	RO	RO
Reset	1	1	1	1	1	1	1	1	1	1	1	1	1	1	1	1

	15	14	13	12	11	10	9	8	7	6	5	4	3	2	1	0
	WDTValue															
Type	RO	RO	RO	RO	RO	RO	RO	RO	RO	RO	RO	RO	RO	RO	RO	RO
Reset	1	1	1	1	1	1	1	1	1	1	1	1	1	1	1	1

Bit/Field	Name	Type	Reset	Description
31:0	WDTValue	RO	0xFFFF.FFFF	Watchdog Value Current value of the 32-bit down counter.

Register 3: Watchdog Control (WDTCTL), offset 0x008

This register is the watchdog control register. The watchdog timer can be configured to generate a reset signal (on second time-out) or an interrupt on time-out.

When the watchdog interrupt has been enabled, all subsequent writes to the control register are ignored. The only mechanism that can re-enable writes is a hardware reset.

Watchdog Control (WDTCTL)

Base 0x4000.0000
Offset 0x008
Type R/W, reset 0x0000.0000

	31	30	29	28	27	26	25	24	23	22	21	20	19	18	17	16
	reserved															
Type	RO	RO	RO	RO	RO	RO	RO	RO	RO	RO	RO	RO	RO	RO	RO	RO
Reset	0	0	0	0	0	0	0	0	0	0	0	0	0	0	0	0

	15	14	13	12	11	10	9	8	7	6	5	4	3	2	1	0
	reserved														RESEN	INTEN
Type	RO	RO	RO	RO	RO	RO	RO	RO	RO	RO	RO	RO	RO	RO	R/W	R/W
Reset	0	0	0	0	0	0	0	0	0	0	0	0	0	0	0	0

Bit/Field	Name	Type	Reset	Description
31:2	reserved	RO	0x00	Software should not rely on the value of a reserved bit. To provide compatibility with future products, the value of a reserved bit should be preserved across a read-modify-write operation.
1	RESEN	R/W	0	Watchdog Reset Enable The `RESEN` values are defined as follows: Value Description 0 Disabled. 1 Enable the Watchdog module reset output.
0	INTEN	R/W	0	Watchdog Interrupt Enable The `INTEN` values are defined as follows: Value Description 0 Interrupt event disabled (once this bit is set, it can only be cleared by a hardware reset). 1 Interrupt event enabled. Once enabled, all writes are ignored.

Register 4: Watchdog Interrupt Clear (WDTICR), offset 0x00C

This register is the interrupt clear register. A write of any value to this register clears the Watchdog interrupt and reloads the 32-bit counter from the **WDTLOAD** register. Value for a read or reset is indeterminate.

Watchdog Interrupt Clear (WDTICR)

Base 0x4000.0000
Offset 0x00C
Type WO, reset -

	31	30	29	28	27	26	25	24	23	22	21	20	19	18	17	16
	WDTIntClr															
Type	WO	WO	WO	WO	WO	WO	WO	WO	WO	WO	WO	WO	WO	WO	WO	WO
Reset	-	-	-	-	-	-	-	-	-	-	-	-	-	-	-	-

	15	14	13	12	11	10	9	8	7	6	5	4	3	2	1	0
	WDTIntClr															
Type	WO	WO	WO	WO	WO	WO	WO	WO	WO	WO	WO	WO	WO	WO	WO	WO
Reset	-	-	-	-	-	-	-	-	-	-	-	-	-	-	-	-

Bit/Field	Name	Type	Reset	Description
31:0	WDTIntClr	WO	-	Watchdog Interrupt Clear

Register 5: Watchdog Raw Interrupt Status (WDTRIS), offset 0x010

This register is the raw interrupt status register. Watchdog interrupt events can be monitored via this register if the controller interrupt is masked.

Watchdog Raw Interrupt Status (WDTRIS)

Base 0x4000.0000
Offset 0x010
Type RO, reset 0x0000.0000

	31	30	29	28	27	26	25	24	23	22	21	20	19	18	17	16
	reserved															
Type	RO	RO	RO	RO	RO	RO	RO	RO	RO	RO	RO	RO	RO	RO	RO	RO
Reset	0	0	0	0	0	0	0	0	0	0	0	0	0	0	0	0

	15	14	13	12	11	10	9	8	7	6	5	4	3	2	1	0
	reserved															WDTRIS
Type	RO	RO	RO	RO	RO	RO	RO	RO	RO	RO	RO	RO	RO	RO	RO	RO
Reset	0	0	0	0	0	0	0	0	0	0	0	0	0	0	0	0

Bit/Field	Name	Type	Reset	Description
31:1	reserved	RO	0x00	Software should not rely on the value of a reserved bit. To provide compatibility with future products, the value of a reserved bit should be preserved across a read-modify-write operation.
0	WDTRIS	RO	0	Watchdog Raw Interrupt Status Gives the raw interrupt state (prior to masking) of **WDTINTR**.

Register 6: Watchdog Masked Interrupt Status (WDTMIS), offset 0x014

This register is the masked interrupt status register. The value of this register is the logical AND of the raw interrupt bit and the Watchdog interrupt enable bit.

Watchdog Masked Interrupt Status (WDTMIS)

Base 0x4000.0000
Offset 0x014
Type RO, reset 0x0000.0000

	31	30	29	28	27	26	25	24	23	22	21	20	19	18	17	16
	reserved															
Type	RO	RO	RO	RO	RO	RO	RO	RO	RO	RO	RO	RO	RO	RO	RO	RO
Reset	0	0	0	0	0	0	0	0	0	0	0	0	0	0	0	0

	15	14	13	12	11	10	9	8	7	6	5	4	3	2	1	0
	reserved															WDTMIS
Type	RO	RO	RO	RO	RO	RO	RO	RO	RO	RO	RO	RO	RO	RO	RO	RO
Reset	0	0	0	0	0	0	0	0	0	0	0	0	0	0	0	0

Bit/Field	Name	Type	Reset	Description
31:1	reserved	RO	0x00	Software should not rely on the value of a reserved bit. To provide compatibility with future products, the value of a reserved bit should be preserved across a read-modify-write operation.
0	WDTMIS	RO	0	Watchdog Masked Interrupt Status Gives the masked interrupt state (after masking) of the **WDTINTR** interrupt.

Register 7: Watchdog Test (WDTTEST), offset 0x418

This register provides user-enabled stalling when the microcontroller asserts the CPU halt flag during debug.

Watchdog Test (WDTTEST)

Base 0x4000.0000
Offset 0x418
Type R/W, reset 0x0000.0000

	31	30	29	28	27	26	25	24	23	22	21	20	19	18	17	16
	reserved															
Type	RO	RO	RO	RO	RO	RO	RO	RO	RO	RO	RO	RO	RO	RO	RO	RO
Reset	0	0	0	0	0	0	0	0	0	0	0	0	0	0	0	0

	15	14	13	12	11	10	9	8	7	6	5	4	3	2	1	0
	reserved							STALL	reserved							
Type	RO	RO	RO	RO	RO	RO	RO	R/W	RO	RO	RO	RO	RO	RO	RO	RO
Reset	0	0	0	0	0	0	0	0	0	0	0	0	0	0	0	0

Bit/Field	Name	Type	Reset	Description
31:9	reserved	RO	0x00	Software should not rely on the value of a reserved bit. To provide compatibility with future products, the value of a reserved bit should be preserved across a read-modify-write operation.
8	STALL	R/W	0	Watchdog Stall Enable When set to 1, if the Stellaris microcontroller is stopped with a debugger, the watchdog timer stops counting. Once the microcontroller is restarted, the watchdog timer resumes counting.
7:0	reserved	RO	0x00	Software should not rely on the value of a reserved bit. To provide compatibility with future products, the value of a reserved bit should be preserved across a read-modify-write operation.

Register 8: Watchdog Lock (WDTLOCK), offset 0xC00

Writing 0x1ACC.E551 to the **WDTLOCK** register enables write access to all other registers. Writing any other value to the **WDTLOCK** register re-enables the locked state for register writes to all the other registers. Reading the **WDTLOCK** register returns the lock status rather than the 32-bit value written. Therefore, when write accesses are disabled, reading the **WDTLOCK** register returns 0x0000.0001 (when locked; otherwise, the returned value is 0x0000.0000 (unlocked)).

Watchdog Lock (WDTLOCK)

Base 0x4000.0000
Offset 0xC00
Type R/W, reset 0x0000.0000

	31	30	29	28	27	26	25	24	23	22	21	20	19	18	17	16
	WDTLock															
Type	R/W	R/W	R/W	R/W	R/W	R/W	R/W	R/W	R/W	R/W	R/W	R/W	R/W	R/W	R/W	R/W
Reset	0	0	0	0	0	0	0	0	0	0	0	0	0	0	0	0

	15	14	13	12	11	10	9	8	7	6	5	4	3	2	1	0
	WDTLock															
Type	R/W	R/W	R/W	R/W	R/W	R/W	R/W	R/W	R/W	R/W	R/W	R/W	R/W	R/W	R/W	R/W
Reset	0	0	0	0	0	0	0	0	0	0	0	0	0	0	0	0

Bit/Field	Name	Type	Reset	Description
31:0	WDTLock	R/W	0x0000	Watchdog Lock A write of the value 0x1ACC.E551 unlocks the watchdog registers for write access. A write of any other value reapplies the lock, preventing any register updates. A read of this register returns the following values: Value — Description 0x0000.0001 — Locked 0x0000.0000 — Unlocked

Register 9: Watchdog Peripheral Identification 4 (WDTPeriphID4), offset 0xFD0

The **WDTPeriphIDn** registers are hard-coded and the fields within the register determine the reset value.

Watchdog Peripheral Identification 4 (WDTPeriphID4)

Base 0x4000.0000
Offset 0xFD0
Type RO, reset 0x0000.0000

	31	30	29	28	27	26	25	24	23	22	21	20	19	18	17	16
	reserved															
Type	RO	RO	RO	RO	RO	RO	RO	RO	RO	RO	RO	RO	RO	RO	RO	RO
Reset	0	0	0	0	0	0	0	0	0	0	0	0	0	0	0	0

	15	14	13	12	11	10	9	8	7	6	5	4	3	2	1	0
	reserved								PID4							
Type	RO	RO	RO	RO	RO	RO	RO	RO	RO	RO	RO	RO	RO	RO	RO	RO
Reset	0	0	0	0	0	0	0	0	0	0	0	0	0	0	0	0

Bit/Field	Name	Type	Reset	Description
31:8	reserved	RO	0x00	Software should not rely on the value of a reserved bit. To provide compatibility with future products, the value of a reserved bit should be preserved across a read-modify-write operation.
7:0	PID4	RO	0x00	WDT Peripheral ID Register[7:0]

Register 10: Watchdog Peripheral Identification 5 (WDTPeriphID5), offset 0xFD4

The **WDTPeriphIDn** registers are hard-coded and the fields within the register determine the reset value.

Watchdog Peripheral Identification 5 (WDTPeriphID5)

Base 0x4000.0000
Offset 0xFD4
Type RO, reset 0x0000.0000

	31	30	29	28	27	26	25	24	23	22	21	20	19	18	17	16
	reserved															
Type	RO	RO	RO	RO	RO	RO	RO	RO	RO	RO	RO	RO	RO	RO	RO	RO
Reset	0	0	0	0	0	0	0	0	0	0	0	0	0	0	0	0

	15	14	13	12	11	10	9	8	7	6	5	4	3	2	1	0
	reserved								PID5							
Type	RO	RO	RO	RO	RO	RO	RO	RO	RO	RO	RO	RO	RO	RO	RO	RO
Reset	0	0	0	0	0	0	0	0	0	0	0	0	0	0	0	0

Bit/Field	Name	Type	Reset	Description
31:8	reserved	RO	0x00	Software should not rely on the value of a reserved bit. To provide compatibility with future products, the value of a reserved bit should be preserved across a read-modify-write operation.
7:0	PID5	RO	0x00	WDT Peripheral ID Register[15:8]

Register 11: Watchdog Peripheral Identification 6 (WDTPeriphID6), offset 0xFD8

The **WDTPeriphIDn** registers are hard-coded and the fields within the register determine the reset value.

Watchdog Peripheral Identification 6 (WDTPeriphID6)

Base 0x4000.0000
Offset 0xFD8
Type RO, reset 0x0000.0000

	31	30	29	28	27	26	25	24	23	22	21	20	19	18	17	16
	reserved															
Type	RO	RO	RO	RO	RO	RO	RO	RO	RO	RO	RO	RO	RO	RO	RO	RO
Reset	0	0	0	0	0	0	0	0	0	0	0	0	0	0	0	0

	15	14	13	12	11	10	9	8	7	6	5	4	3	2	1	0
	reserved								PID6							
Type	RO	RO	RO	RO	RO	RO	RO	RO	RO	RO	RO	RO	RO	RO	RO	RO
Reset	0	0	0	0	0	0	0	0	0	0	0	0	0	0	0	0

Bit/Field	Name	Type	Reset	Description
31:8	reserved	RO	0x00	Software should not rely on the value of a reserved bit. To provide compatibility with future products, the value of a reserved bit should be preserved across a read-modify-write operation.
7:0	PID6	RO	0x00	WDT Peripheral ID Register[23:16]

Register 12: Watchdog Peripheral Identification 7 (WDTPeriphID7), offset 0xFDC

The **WDTPeriphIDn** registers are hard-coded and the fields within the register determine the reset value.

Watchdog Peripheral Identification 7 (WDTPeriphID7)

Base 0x4000.0000
Offset 0xFDC
Type RO, reset 0x0000.0000

	31	30	29	28	27	26	25	24	23	22	21	20	19	18	17	16
	reserved															
Type	RO	RO	RO	RO	RO	RO	RO	RO	RO	RO	RO	RO	RO	RO	RO	RO
Reset	0	0	0	0	0	0	0	0	0	0	0	0	0	0	0	0

	15	14	13	12	11	10	9	8	7	6	5	4	3	2	1	0
	reserved								PID7							
Type	RO	RO	RO	RO	RO	RO	RO	RO	RO	RO	RO	RO	RO	RO	RO	RO
Reset	0	0	0	0	0	0	0	0	0	0	0	0	0	0	0	0

Bit/Field	Name	Type	Reset	Description
31:8	reserved	RO	0x00	Software should not rely on the value of a reserved bit. To provide compatibility with future products, the value of a reserved bit should be preserved across a read-modify-write operation.
7:0	PID7	RO	0x00	WDT Peripheral ID Register[31:24]

Register 13: Watchdog Peripheral Identification 0 (WDTPeriphID0), offset 0xFE0

The **WDTPeriphIDn** registers are hard-coded and the fields within the register determine the reset value.

Watchdog Peripheral Identification 0 (WDTPeriphID0)

Base 0x4000.0000
Offset 0xFE0
Type RO, reset 0x0000.0005

	31	30	29	28	27	26	25	24	23	22	21	20	19	18	17	16
	reserved															
Type	RO	RO	RO	RO	RO	RO	RO	RO	RO	RO	RO	RO	RO	RO	RO	RO
Reset	0	0	0	0	0	0	0	0	0	0	0	0	0	0	0	0

	15	14	13	12	11	10	9	8	7	6	5	4	3	2	1	0
	reserved								PID0							
Type	RO	RO	RO	RO	RO	RO	RO	RO	RO	RO	RO	RO	RO	RO	RO	RO
Reset	0	0	0	0	0	0	0	0	0	0	0	0	0	1	0	1

Bit/Field	Name	Type	Reset	Description
31:8	reserved	RO	0x00	Software should not rely on the value of a reserved bit. To provide compatibility with future products, the value of a reserved bit should be preserved across a read-modify-write operation.
7:0	PID0	RO	0x05	Watchdog Peripheral ID Register[7:0]

Register 14: Watchdog Peripheral Identification 1 (WDTPeriphID1), offset 0xFE4

The **WDTPeriphIDn** registers are hard-coded and the fields within the register determine the reset value.

Watchdog Peripheral Identification 1 (WDTPeriphID1)

Base 0x4000.0000
Offset 0xFE4
Type RO, reset 0x0000.0018

	31	30	29	28	27	26	25	24	23	22	21	20	19	18	17	16
	reserved															
Type	RO	RO	RO	RO	RO	RO	RO	RO	RO	RO	RO	RO	RO	RO	RO	RO
Reset	0	0	0	0	0	0	0	0	0	0	0	0	0	0	0	0

	15	14	13	12	11	10	9	8	7	6	5	4	3	2	1	0
	reserved								PID1							
Type	RO	RO	RO	RO	RO	RO	RO	RO	RO	RO	RO	RO	RO	RO	RO	RO
Reset	0	0	0	0	0	0	0	0	0	0	0	1	1	0	0	0

Bit/Field	Name	Type	Reset	Description
31:8	reserved	RO	0x00	Software should not rely on the value of a reserved bit. To provide compatibility with future products, the value of a reserved bit should be preserved across a read-modify-write operation.
7:0	PID1	RO	0x18	Watchdog Peripheral ID Register[15:8]

Register 15: Watchdog Peripheral Identification 2 (WDTPeriphID2), offset 0xFE8

The **WDTPeriphIDn** registers are hard-coded and the fields within the register determine the reset value.

Watchdog Peripheral Identification 2 (WDTPeriphID2)

Base 0x4000.0000
Offset 0xFE8
Type RO, reset 0x0000.0018

	31	30	29	28	27	26	25	24	23	22	21	20	19	18	17	16
	reserved															
Type	RO	RO	RO	RO	RO	RO	RO	RO	RO	RO	RO	RO	RO	RO	RO	RO
Reset	0	0	0	0	0	0	0	0	0	0	0	0	0	0	0	0

	15	14	13	12	11	10	9	8	7	6	5	4	3	2	1	0
	reserved								PID2							
Type	RO	RO	RO	RO	RO	RO	RO	RO	RO	RO	RO	RO	RO	RO	RO	RO
Reset	0	0	0	0	0	0	0	0	0	0	0	1	1	0	0	0

Bit/Field	Name	Type	Reset	Description
31:8	reserved	RO	0x00	Software should not rely on the value of a reserved bit. To provide compatibility with future products, the value of a reserved bit should be preserved across a read-modify-write operation.
7:0	PID2	RO	0x18	Watchdog Peripheral ID Register[23:16]

Register 16: Watchdog Peripheral Identification 3 (WDTPeriphID3), offset 0xFEC

The **WDTPeriphIDn** registers are hard-coded and the fields within the register determine the reset value.

Watchdog Peripheral Identification 3 (WDTPeriphID3)

Base 0x4000.0000
Offset 0xFEC
Type RO, reset 0x0000.0001

	31	30	29	28	27	26	25	24	23	22	21	20	19	18	17	16
	reserved															
Type	RO	RO	RO	RO	RO	RO	RO	RO	RO	RO	RO	RO	RO	RO	RO	RO
Reset	0	0	0	0	0	0	0	0	0	0	0	0	0	0	0	0

	15	14	13	12	11	10	9	8	7	6	5	4	3	2	1	0
	reserved								PID3							
Type	RO	RO	RO	RO	RO	RO	RO	RO	RO	RO	RO	RO	RO	RO	RO	RO
Reset	0	0	0	0	0	0	0	0	0	0	0	0	0	0	0	1

Bit/Field	Name	Type	Reset	Description
31:8	reserved	RO	0x00	Software should not rely on the value of a reserved bit. To provide compatibility with future products, the value of a reserved bit should be preserved across a read-modify-write operation.
7:0	PID3	RO	0x01	Watchdog Peripheral ID Register[31:24]

Register 17: Watchdog PrimeCell Identification 0 (WDTPCellID0), offset 0xFF0

The **WDTPCellIDn** registers are hard-coded and the fields within the register determine the reset value.

Watchdog PrimeCell Identification 0 (WDTPCellID0)

Base 0x4000.0000
Offset 0xFF0
Type RO, reset 0x0000.000D

	31	30	29	28	27	26	25	24	23	22	21	20	19	18	17	16
	reserved															
Type	RO	RO	RO	RO	RO	RO	RO	RO	RO	RO	RO	RO	RO	RO	RO	RO
Reset	0	0	0	0	0	0	0	0	0	0	0	0	0	0	0	0

	15	14	13	12	11	10	9	8	7	6	5	4	3	2	1	0
	reserved								CID0							
Type	RO	RO	RO	RO	RO	RO	RO	RO	RO	RO	RO	RO	RO	RO	RO	RO
Reset	0	0	0	0	0	0	0	0	0	0	0	0	1	1	0	1

Bit/Field	Name	Type	Reset	Description
31:8	reserved	RO	0x00	Software should not rely on the value of a reserved bit. To provide compatibility with future products, the value of a reserved bit should be preserved across a read-modify-write operation.
7:0	CID0	RO	0x0D	Watchdog PrimeCell ID Register[7:0]

Register 18: Watchdog PrimeCell Identification 1 (WDTPCellID1), offset 0xFF4

The **WDTPCellIDn** registers are hard-coded and the fields within the register determine the reset value.

Watchdog PrimeCell Identification 1 (WDTPCellID1)

Base 0x4000.0000
Offset 0xFF4
Type RO, reset 0x0000.00F0

	31	30	29	28	27	26	25	24	23	22	21	20	19	18	17	16
	reserved															
Type	RO	RO	RO	RO	RO	RO	RO	RO	RO	RO	RO	RO	RO	RO	RO	RO
Reset	0	0	0	0	0	0	0	0	0	0	0	0	0	0	0	0

	15	14	13	12	11	10	9	8	7	6	5	4	3	2	1	0
	reserved								CID1							
Type	RO	RO	RO	RO	RO	RO	RO	RO	RO	RO	RO	RO	RO	RO	RO	RO
Reset	0	0	0	0	0	0	0	0	1	1	1	1	0	0	0	0

Bit/Field	Name	Type	Reset	Description
31:8	reserved	RO	0x00	Software should not rely on the value of a reserved bit. To provide compatibility with future products, the value of a reserved bit should be preserved across a read-modify-write operation.
7:0	CID1	RO	0xF0	Watchdog PrimeCell ID Register[15:8]

Register 19: Watchdog PrimeCell Identification 2 (WDTPCellID2), offset 0xFF8

The **WDTPCellIDn** registers are hard-coded and the fields within the register determine the reset value.

Watchdog PrimeCell Identification 2 (WDTPCellID2)

Base 0x4000.0000
Offset 0xFF8
Type RO, reset 0x0000.0005

	31	30	29	28	27	26	25	24	23	22	21	20	19	18	17	16
	reserved															
Type	RO	RO	RO	RO	RO	RO	RO	RO	RO	RO	RO	RO	RO	RO	RO	RO
Reset	0	0	0	0	0	0	0	0	0	0	0	0	0	0	0	0

	15	14	13	12	11	10	9	8	7	6	5	4	3	2	1	0
	reserved								CID2							
Type	RO	RO	RO	RO	RO	RO	RO	RO	RO	RO	RO	RO	RO	RO	RO	RO
Reset	0	0	0	0	0	0	0	0	0	0	0	0	0	1	0	1

Bit/Field	Name	Type	Reset	Description
31:8	reserved	RO	0x00	Software should not rely on the value of a reserved bit. To provide compatibility with future products, the value of a reserved bit should be preserved across a read-modify-write operation.
7:0	CID2	RO	0x05	Watchdog PrimeCell ID Register[23:16]

Register 20: Watchdog PrimeCell Identification 3 (WDTPCellID3), offset 0xFFC

The **WDTPCellIDn** registers are hard-coded and the fields within the register determine the reset value.

Watchdog PrimeCell Identification 3 (WDTPCellID3)

Base 0x4000.0000
Offset 0xFFC
Type RO, reset 0x0000.00B1

	31	30	29	28	27	26	25	24	23	22	21	20	19	18	17	16
	reserved															
Type	RO	RO	RO	RO	RO	RO	RO	RO	RO	RO	RO	RO	RO	RO	RO	RO
Reset	0	0	0	0	0	0	0	0	0	0	0	0	0	0	0	0

	15	14	13	12	11	10	9	8	7	6	5	4	3	2	1	0
	reserved								CID3							
Type	RO	RO	RO	RO	RO	RO	RO	RO	RO	RO	RO	RO	RO	RO	RO	RO
Reset	0	0	0	0	0	0	0	0	1	0	1	1	0	0	0	1

Bit/Field	Name	Type	Reset	Description
31:8	reserved	RO	0x00	Software should not rely on the value of a reserved bit. To provide compatibility with future products, the value of a reserved bit should be preserved across a read-modify-write operation.
7:0	CID3	RO	0xB1	Watchdog PrimeCell ID Register[31:24]

11 Analog-to-Digital Converter (ADC)

An analog-to-digital converter (ADC) is a peripheral that converts a continuous analog voltage to a discrete digital number.

The Stellaris® ADC module features 10-bit conversion resolution and supports eight input channels, plus an internal temperature sensor. The ADC module contains four programmable sequencer which allows for the sampling of multiple analog input sources without controller intervention. Each sample sequence provides flexible programming with fully configurable input source, trigger events, interrupt generation, and sequence priority.

The Stellaris ADC module provides the following features:

- Eight analog input channels
- Single-ended and differential-input configurations
- On-chip internal temperature sensor
- Sample rate of 500 thousand samples/second
- Flexible, configurable analog-to-digital conversion
- Four programmable sample conversion sequences from one to eight entries long, with corresponding conversion result FIFOs
- Flexible trigger control
  - Controller (software)
  - Timers
  - PWM
  - GPIO
- Hardware averaging of up to 64 samples for improved accuracy
- Converter uses an internal 3-V reference
- Power and ground for the analog circuitry is separate from the digital power and ground

11.1 Block Diagram

Figure 11-1 on page 431 provides details on the internal configuration of the ADC controls and data registers.

Figure 11-1. ADC Module Block Diagram

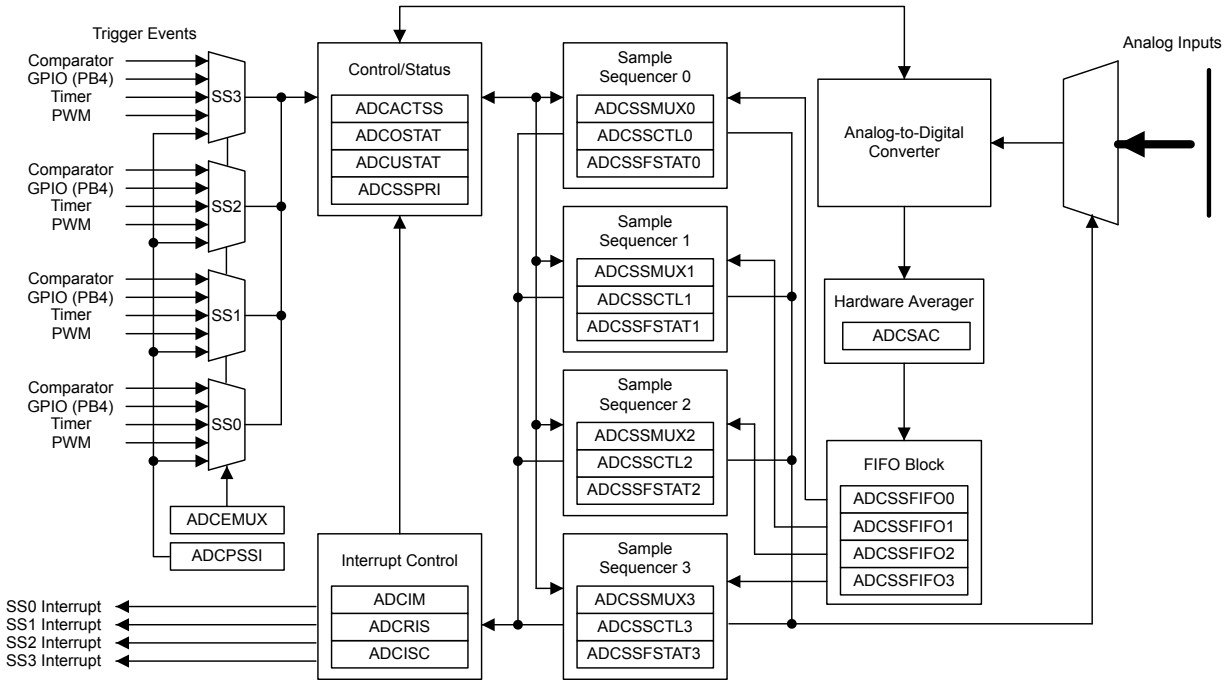

11.2 Signal Description

Table 11-1 on page 431 lists the external signals of the ADC module and describes the function of each. The signals are analog functions for some GPIO signals. The column in the table below titled "Pin Assignment" lists the GPIO pin placement for the ADC signals. The `AINx` analog signals are not 5-V tolerant and go through an isolation circuit before reaching their circuitry. These signals are configured by clearing the corresponding `DEN` bit in the **GPIO Digital Enable (GPIODEN)** register and setting the corresponding `AMSEL` bit in the **GPIO Analog Mode Select (GPIOAMSEL)** register. For more information on configuring GPIOs, see “General-Purpose Input/Outputs (GPIOs)” on page 324.

Table 11-1. ADC Signals (64LQFP)

Pin Name	Pin Number	Pin Type	Buffer Type[a]	Description
ADC0	1	I	Analog	Analog-to-digital converter input 0.
ADC1	2	I	Analog	Analog-to-digital converter input 1.
ADC2	5	I	Analog	Analog-to-digital converter input 2.
ADC3	6	I	Analog	Analog-to-digital converter input 3.
ADC4	64	I	Analog	Analog-to-digital converter input 4.
ADC5	63	I	Analog	Analog-to-digital converter input 5.
ADC6	62	I	Analog	Analog-to-digital converter input 6.
ADC7	61	I	Analog	Analog-to-digital converter input 7.

a. The TTL designation indicates the pin has TTL-compatible voltage levels.

11.3 Functional Description

The Stellaris ADC collects sample data by using a programmable sequence-based approach instead of the traditional single or double-sampling approaches found on many ADC modules. Each *sample sequence* is a fully programmed series of consecutive (back-to-back) samples, allowing the ADC to collect data from multiple input sources without having to be re-configured or serviced by the controller. The programming of each sample in the sample sequence includes parameters such as the input source and mode (differential versus single-ended input), interrupt generation on sample completion, and the indicator for the last sample in the sequence.

11.3.1 Sample Sequencers

The sampling control and data capture is handled by the sample sequencers. All of the sequencers are identical in implementation except for the number of samples that can be captured and the depth of the FIFO. Table 11-2 on page 432 shows the maximum number of samples that each sequencer can capture and its corresponding FIFO depth. In this implementation, each FIFO entry is a 32-bit word, with the lower 10 bits containing the conversion result.

Table 11-2. Samples and FIFO Depth of Sequencers

Sequencer	Number of Samples	Depth of FIFO
SS3	1	1
SS2	4	4
SS1	4	4
SS0	8	8

For a given sample sequence, each sample is defined by two 4-bit nibbles in the **ADC Sample Sequence Input Multiplexer Select (ADCSSMUXn)** and **ADC Sample Sequence Control (ADCSSCTLn)** registers, where "n" corresponds to the sequence number. The **ADCSSMUXn** nibbles select the input pin, while the **ADCSSCTLn** nibbles contain the sample control bits corresponding to parameters such as temperature sensor selection, interrupt enable, end of sequence, and differential input mode. Sample sequencers are enabled by setting the respective `ASENn` bit in the **ADC Active Sample Sequencer (ADCACTSS)** register, and should be configured before being enabled.

When configuring a sample sequence, multiple uses of the same input pin within the same sequence is allowed. In the **ADCSSCTLn** register, the `IEn` bits can be set for any combination of samples, allowing interrupts to be generated after every sample in the sequence if necessary. Also, the `END` bit can be set at any point within a sample sequence. For example, if Sequencer 0 is used, the `END` bit can be set in the nibble associated with the fifth sample, allowing Sequencer 0 to complete execution of the sample sequence after the fifth sample.

After a sample sequence completes execution, the result data can be retrieved from the **ADC Sample Sequence Result FIFO (ADCSSFIFOn)** registers. The FIFOs are simple circular buffers that read a single address to "pop" result data. For software debug purposes, the positions of the FIFO head and tail pointers are visible in the **ADC Sample Sequence FIFO Status (ADCSSFSTATn)** registers along with `FULL` and `EMPTY` status flags. Overflow and underflow conditions are monitored using the **ADCOSTAT** and **ADCUSTAT** registers.

11.3.2 Module Control

Outside of the sample sequencers, the remainder of the control logic is responsible for tasks such as:

- Interrupt generation
- Sequence prioritization
- Trigger configuration

Most of the ADC control logic runs at the ADC clock rate of 14-18 MHz. The internal ADC divider is configured automatically by hardware when the system XTAL is selected. The automatic clock divider configuration targets 16.667 MHz operation for all Stellaris devices.

11.3.2.1 Interrupts

The register configurations of the sample sequencers dictate which events generate raw interrupts, but do not have control over whether the interrupt is actually sent to the interrupt controller. The ADC module's interrupt signals are controlled by the state of the MASK bits in the **ADC Interrupt Mask (ADCIM)** register. Interrupt status can be viewed at two locations: the **ADC Raw Interrupt Status (ADCRIS)** register, which shows the raw status of the various interrupt signals, and the **ADC Interrupt Status and Clear (ADCISC)** register, which shows active interrupts that are enabled by the **ADCIM** register. Sequencer interrupts are cleared by writing a 1 to the corresponding IN bit in **ADCISC**.

11.3.2.2 Prioritization

When sampling events (triggers) happen concurrently, they are prioritized for processing by the values in the **ADC Sample Sequencer Priority (ADCSSPRI)** register. Valid priority values are in the range of 0-3, with 0 being the highest priority and 3 being the lowest. Multiple active sample sequencer units with the same priority do not provide consistent results, so software must ensure that all active sample sequencer units have a unique priority value.

11.3.2.3 Sampling Events

Sample triggering for each sample sequencer is defined in the **ADC Event Multiplexer Select (ADCEMUX)** register. The external peripheral triggering sources vary by Stellaris family member, but all devices share the "Controller" and "Always" triggers. Software can initiate sampling by setting the SSx bits in the **ADC Processor Sample Sequence Initiate (ADCPSSI)** register.

Care must be taken when using the "Always" trigger. If a sequence's priority is too high, it is possible to starve other lower priority sequences.

11.3.3 Hardware Sample Averaging Circuit

Higher precision results can be generated using the hardware averaging circuit, however, the improved results are at the cost of throughput. Up to 64 samples can be accumulated and averaged to form a single data entry in the sequencer FIFO. Throughput is decreased proportionally to the number of samples in the averaging calculation. For example, if the averaging circuit is configured to average 16 samples, the throughput is decreased by a factor of 16.

By default the averaging circuit is off and all data from the converter passes through to the sequencer FIFO. The averaging hardware is controlled by the **ADC Sample Averaging Control (ADCSAC)** register (see page 453). There is a single averaging circuit and all input channels receive the same amount of averaging whether they are single-ended or differential.

11.3.4 Analog-to-Digital Converter

The converter itself generates a 10-bit output value for selected analog input. Special analog pads are used to minimize the distortion on the input. An internal 3 V reference is used by the converter

resulting in sample values ranging from 0x000 at 0 V input to 0x3FF at 3 V input when in single-ended input mode.

11.3.5 Differential Sampling

In addition to traditional single-ended sampling, the ADC module supports differential sampling of two analog input channels. To enable differential sampling, software must set the `Dn` bit in the **ADCSSCTL0n** register in a step's configuration nibble.

When a sequence step is configured for differential sampling, its corresponding value in the **ADCSSMUXn** register must be set to one of the four differential pairs, numbered 0-3. Differential pair 0 samples analog inputs 0 and 1; differential pair 1 samples analog inputs 2 and 3; and so on (see Table 11-3 on page 434). The ADC does not support other differential pairings such as analog input 0 with analog input 3. The number of differential pairs supported is dependent on the number of analog inputs (see Table 11-3 on page 434).

Table 11-3. Differential Sampling Pairs

Differential Pair	Analog Inputs
0	0 and 1
1	2 and 3
2	4 and 5
3	6 and 7

The voltage sampled in differential mode is the difference between the odd and even channels:

ΔV (differential voltage) = V_{IN_EVEN} (even channels) – V_{IN_ODD} (odd channels), therefore:

- If $\Delta V = 0$, then the conversion result = 0x1FF
- If $\Delta V > 0$, then the conversion result > 0x1FF (range is 0x1FF–0x3FF)
- If $\Delta V < 0$, then the conversion result < 0x1FF (range is 0–0x1FF)

The differential pairs assign polarities to the analog inputs: the even-numbered input is always positive, and the odd-numbered input is always negative. In order for a valid conversion result to appear, the negative input must be in the range of ± 1.5 V of the positive input. If an analog input is greater than 3 V or less than 0 V (the valid range for analog inputs), the input voltage is clipped, meaning it appears as either 3 V or 0 V, respectively, to the ADC.

Figure 11-2 on page 435 shows an example of the negative input centered at 1.5 V. In this configuration, the differential range spans from -1.5 V to 1.5 V. Figure 11-3 on page 435 shows an example where the negative input is centered at -0.75 V, meaning inputs on the positive input saturate past a differential voltage of -0.75 V since the input voltage is less than 0 V. Figure 11-4 on page 436 shows an example of the negative input centered at 2.25 V, where inputs on the positive channel saturate past a differential voltage of 0.75 V since the input voltage would be greater than 3 V.

Figure 11-2. Differential Sampling Range, V_{IN_ODD} = 1.5 V

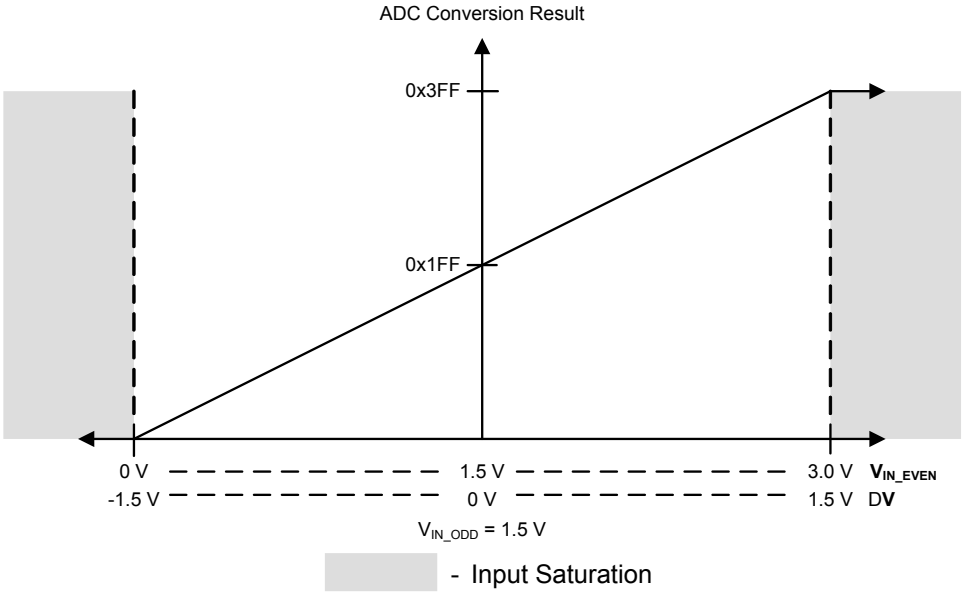

Figure 11-3. Differential Sampling Range, V_{IN_ODD} = 0.75 V

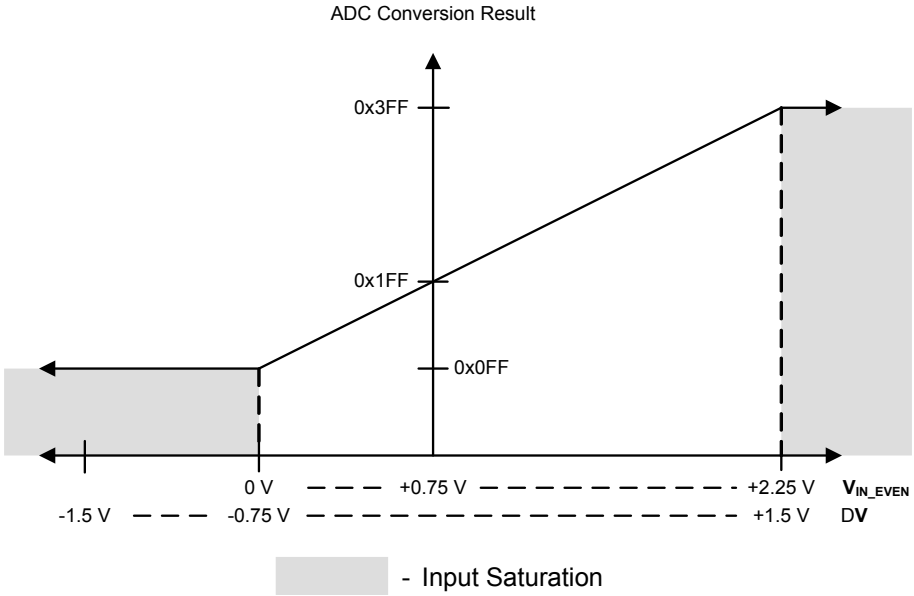

Figure 11-4. Differential Sampling Range, V_{IN_ODD} = 2.25 V

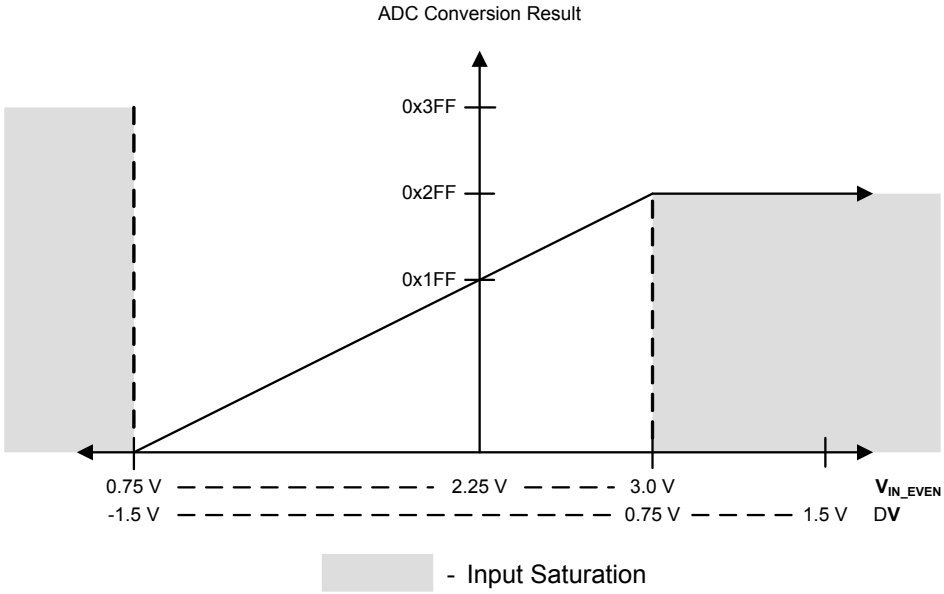

11.3.6 Internal Temperature Sensor

The temperature sensor's primary purpose is to notify the system that the internal temperature is too high or low for reliable operation.

The temperature sensor does not have a separate enable, since it also contains the bandgap reference and must always be enabled. The reference is supplied to other analog modules; not just the ADC.

The internal temperature sensor provides an analog temperature reading as well as a reference voltage. The voltage at the output terminal SENSO is given by the following equation:

```
SENSO = 2.7 - ((T + 55) / 75)
```

This relation is shown in Figure 11-5 on page 437.

Figure 11-5. Internal Temperature Sensor Characteristic

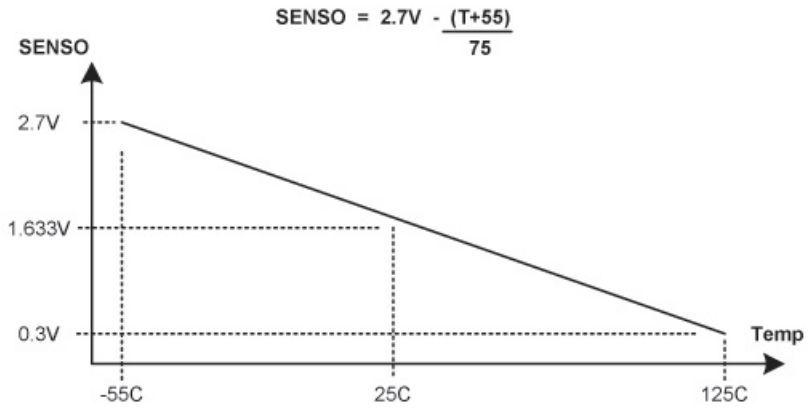

11.4 Initialization and Configuration

In order for the ADC module to be used, the PLL must be enabled and using a supported crystal frequency (see the **RCC** register). Using unsupported frequencies can cause faulty operation in the ADC module.

11.4.1 Module Initialization

Initialization of the ADC module is a simple process with very few steps. The main steps include enabling the clock to the ADC, disabling the analog isolation circuit associated with all inputs that are to be used, and reconfiguring the sample sequencer priorities (if needed).

The initialization sequence for the ADC is as follows:

1. Enable the ADC clock by writing a value of 0x0001.0000 to the **RCGC0** register (see page 212).
2. Disable the analog isolation circuit for all ADC input pins that are to be used by writing a 1 to the appropriate bits of the **GPIOAMSEL** register (see page 359) in the associated GPIO block.
3. If required by the application, reconfigure the sample sequencer priorities in the **ADCSSPRI** register. The default configuration has Sample Sequencer 0 with the highest priority, and Sample Sequencer 3 as the lowest priority.

11.4.2 Sample Sequencer Configuration

Configuration of the sample sequencers is slightly more complex than the module initialization since each sample sequence is completely programmable.

The configuration for each sample sequencer should be as follows:

1. Ensure that the sample sequencer is disabled by writing a 0 to the corresponding ASENn bit in the **ADCACTSS** register. Programming of the sample sequencers is allowed without having them enabled. Disabling the sequencer during programming prevents erroneous execution if a trigger event were to occur during the configuration process.
2. Configure the trigger event for the sample sequencer in the **ADCEMUX** register.

3. For each sample in the sample sequence, configure the corresponding input source in the **ADCSSMUXn** register.
4. For each sample in the sample sequence, configure the sample control bits in the corresponding nibble in the **ADCSSCTLn** register. When programming the last nibble, ensure that the END bit is set. Failure to set the END bit causes unpredictable behavior.
5. If interrupts are to be used, write a 1 to the corresponding MASK bit in the **ADCIM** register.
6. Enable the sample sequencer logic by writing a 1 to the corresponding ASENn bit in the **ADCACTSS** register.

11.5 Register Map

Table 11-4 on page 438 lists the ADC registers. The offset listed is a hexadecimal increment to the register's address, relative to the ADC base address of 0x4003.8000.

Note that the ADC module clock must be enabled before the registers can be programmed (see page 212). There must be a delay of 3 system clocks after the ADC module clock is enabled before any ADC module registers are accessed.

Table 11-4. ADC Register Map

Offset	Name	Type	Reset	Description	See page
0x000	ADCACTSS	R/W	0x0000.0000	ADC Active Sample Sequencer	440
0x004	ADCRIS	RO	0x0000.0000	ADC Raw Interrupt Status	441
0x008	ADCIM	R/W	0x0000.0000	ADC Interrupt Mask	442
0x00C	ADCISC	R/W1C	0x0000.0000	ADC Interrupt Status and Clear	443
0x010	ADCOSTAT	R/W1C	0x0000.0000	ADC Overflow Status	444
0x014	ADCEMUX	R/W	0x0000.0000	ADC Event Multiplexer Select	445
0x018	ADCUSTAT	R/W1C	0x0000.0000	ADC Underflow Status	449
0x020	ADCSSPRI	R/W	0x0000.3210	ADC Sample Sequencer Priority	450
0x028	ADCPSSI	WO	-	ADC Processor Sample Sequence Initiate	452
0x030	ADCSAC	R/W	0x0000.0000	ADC Sample Averaging Control	453
0x040	ADCSSMUX0	R/W	0x0000.0000	ADC Sample Sequence Input Multiplexer Select 0	454
0x044	ADCSSCTL0	R/W	0x0000.0000	ADC Sample Sequence Control 0	456
0x048	ADCSSFIFO0	RO	-	ADC Sample Sequence Result FIFO 0	459
0x04C	ADCSSFSTAT0	RO	0x0000.0100	ADC Sample Sequence FIFO 0 Status	460
0x060	ADCSSMUX1	R/W	0x0000.0000	ADC Sample Sequence Input Multiplexer Select 1	461
0x064	ADCSSCTL1	R/W	0x0000.0000	ADC Sample Sequence Control 1	462
0x068	ADCSSFIFO1	RO	-	ADC Sample Sequence Result FIFO 1	459
0x06C	ADCSSFSTAT1	RO	0x0000.0100	ADC Sample Sequence FIFO 1 Status	460
0x080	ADCSSMUX2	R/W	0x0000.0000	ADC Sample Sequence Input Multiplexer Select 2	461

Table 11-4. ADC Register Map *(continued)*

Offset	Name	Type	Reset	Description	See page
0x084	ADCSSCTL2	R/W	0x0000.0000	ADC Sample Sequence Control 2	462
0x088	ADCSSFIFO2	RO	-	ADC Sample Sequence Result FIFO 2	459
0x08C	ADCSSFSTAT2	RO	0x0000.0100	ADC Sample Sequence FIFO 2 Status	460
0x0A0	ADCSSMUX3	R/W	0x0000.0000	ADC Sample Sequence Input Multiplexer Select 3	464
0x0A4	ADCSSCTL3	R/W	0x0000.0002	ADC Sample Sequence Control 3	465
0x0A8	ADCSSFIFO3	RO	-	ADC Sample Sequence Result FIFO 3	459
0x0AC	ADCSSFSTAT3	RO	0x0000.0100	ADC Sample Sequence FIFO 3 Status	460

11.6 Register Descriptions

The remainder of this section lists and describes the ADC registers, in numerical order by address offset.

Register 1: ADC Active Sample Sequencer (ADCACTSS), offset 0x000

This register controls the activation of the sample sequencers. Each sample sequencer can be enabled or disabled independently.

ADC Active Sample Sequencer (ADCACTSS)

Base 0x4003.8000
Offset 0x000
Type R/W, reset 0x0000.0000

	31	30	29	28	27	26	25	24	23	22	21	20	19	18	17	16
	reserved															
Type	RO	RO	RO	RO	RO	RO	RO	RO	RO	RO	RO	RO	RO	RO	RO	RO
Reset	0	0	0	0	0	0	0	0	0	0	0	0	0	0	0	0

	15	14	13	12	11	10	9	8	7	6	5	4	3	2	1	0
	reserved												ASEN3	ASEN2	ASEN1	ASEN0
Type	RO	RO	RO	RO	RO	RO	RO	RO	RO	RO	RO	RO	R/W	R/W	R/W	R/W
Reset	0	0	0	0	0	0	0	0	0	0	0	0	0	0	0	0

Bit/Field	Name	Type	Reset	Description
31:4	reserved	RO	0x0000.000	Software should not rely on the value of a reserved bit. To provide compatibility with future products, the value of a reserved bit should be preserved across a read-modify-write operation.
3	ASEN3	R/W	0	ADC SS3 Enable Specifies whether Sample Sequencer 3 is enabled. If set, the sample sequence logic for Sequencer 3 is active. Otherwise, the sequencer is inactive.
2	ASEN2	R/W	0	ADC SS2 Enable Specifies whether Sample Sequencer 2 is enabled. If set, the sample sequence logic for Sequencer 2 is active. Otherwise, the sequencer is inactive.
1	ASEN1	R/W	0	ADC SS1 Enable Specifies whether Sample Sequencer 1 is enabled. If set, the sample sequence logic for Sequencer 1 is active. Otherwise, the sequencer is inactive.
0	ASEN0	R/W	0	ADC SS0 Enable Specifies whether Sample Sequencer 0 is enabled. If set, the sample sequence logic for Sequencer 0 is active. Otherwise, the sequencer is inactive.

Register 2: ADC Raw Interrupt Status (ADCRIS), offset 0x004

This register shows the status of the raw interrupt signal of each sample sequencer. These bits may be polled by software to look for interrupt conditions without having to generate controller interrupts.

ADC Raw Interrupt Status (ADCRIS)

Base 0x4003.8000
Offset 0x004
Type RO, reset 0x0000.0000

	31	30	29	28	27	26	25	24	23	22	21	20	19	18	17	16
	reserved															
Type	RO	RO	RO	RO	RO	RO	RO	RO	RO	RO	RO	RO	RO	RO	RO	RO
Reset	0	0	0	0	0	0	0	0	0	0	0	0	0	0	0	0

	15	14	13	12	11	10	9	8	7	6	5	4	3	2	1	0
	reserved												INR3	INR2	INR1	INR0
Type	RO	RO	RO	RO	RO	RO	RO	RO	RO	RO	RO	RO	RO	RO	RO	RO
Reset	0	0	0	0	0	0	0	0	0	0	0	0	0	0	0	0

Bit/Field	Name	Type	Reset	Description
31:4	reserved	RO	0x000	Software should not rely on the value of a reserved bit. To provide compatibility with future products, the value of a reserved bit should be preserved across a read-modify-write operation.
3	INR3	RO	0	SS3 Raw Interrupt Status This bit is set by hardware when a sample with its respective **ADCSSCTL3** `IE` bit has completed conversion. This bit is cleared by setting the `IN3` bit in the **ADCISC** register.
2	INR2	RO	0	SS2 Raw Interrupt Status This bit is set by hardware when a sample with its respective **ADCSSCTL2** `IE` bit has completed conversion. This bit is cleared by setting the `IN2` bit in the **ADCISC** register.
1	INR1	RO	0	SS1 Raw Interrupt Status This bit is set by hardware when a sample with its respective **ADCSSCTL1** `IE` bit has completed conversion. This bit is cleared by setting the `IN1` bit in the **ADCISC** register.
0	INR0	RO	0	SS0 Raw Interrupt Status This bit is set by hardware when a sample with its respective **ADCSSCTL0** `IE` bit has completed conversion. This bit is cleared by setting the `IN30` bit in the **ADCISC** register.

Register 3: ADC Interrupt Mask (ADCIM), offset 0x008

This register controls whether the sample sequencer raw interrupt signals are promoted to controller interrupts. Each raw interrupt signal can be masked independently.

ADC Interrupt Mask (ADCIM)

Base 0x4003.8000
Offset 0x008
Type R/W, reset 0x0000.0000

	31	30	29	28	27	26	25	24	23	22	21	20	19	18	17	16
	reserved															
Type	RO	RO	RO	RO	RO	RO	RO	RO	RO	RO	RO	RO	RO	RO	RO	RO
Reset	0	0	0	0	0	0	0	0	0	0	0	0	0	0	0	0

	15	14	13	12	11	10	9	8	7	6	5	4	3	2	1	0
	reserved												MASK3	MASK2	MASK1	MASK0
Type	RO	RO	RO	RO	RO	RO	RO	RO	RO	RO	RO	RO	R/W	R/W	R/W	R/W
Reset	0	0	0	0	0	0	0	0	0	0	0	0	0	0	0	0

Bit/Field	Name	Type	Reset	Description
31:4	reserved	RO	0x000	Software should not rely on the value of a reserved bit. To provide compatibility with future products, the value of a reserved bit should be preserved across a read-modify-write operation.
3	MASK3	R/W	0	SS3 Interrupt Mask When set, this bit allows the raw interrupt signal from Sample Sequencer 3 (**ADCRIS** register `INR3` bit) to be promoted to a controller interrupt. When clear, the status of Sample Sequencer 3 does not affect the SS3 interrupt status.
2	MASK2	R/W	0	SS2 Interrupt Mask When set, this bit allows the raw interrupt signal from Sample Sequencer 2 (**ADCRIS** register `INR2` bit) to be promoted to a controller interrupt. When clear, the status of Sample Sequencer 2 does not affect the SS2 interrupt status.
1	MASK1	R/W	0	SS1 Interrupt Mask When set, this bit allows the raw interrupt signal from Sample Sequencer 1 (**ADCRIS** register `INR1` bit) to be promoted to a controller interrupt. When clear, the status of Sample Sequencer 1 does not affect the SS1 interrupt status.
0	MASK0	R/W	0	SS0 Interrupt Mask When set, this bit allows the raw interrupt signal from Sample Sequencer 0 (**ADCRIS** register `INR0` bit) to be promoted to a controller interrupt. When clear, the status of Sample Sequencer 0 does not affect the SS0 interrupt status.

Register 4: ADC Interrupt Status and Clear (ADCISC), offset 0x00C

This register provides the mechanism for clearing sample sequence interrupt conditions and shows the status of controller interrupts generated by the sample sequencers. When read, each bit field is the logical AND of the respective `INR` and `MASK` bits. Sample sequence nterrupts are cleared by setting the corresponding bit position. If software is polling the **ADCRIS** instead of generating interrupts, the sample sequence `INR` bits are still cleared via the **ADCISC** register, even if the `IN` bit is not set.

ADC Interrupt Status and Clear (ADCISC)

Base 0x4003.8000
Offset 0x00C
Type R/W1C, reset 0x0000.0000

	31	30	29	28	27	26	25	24	23	22	21	20	19	18	17	16
	reserved															
Type	RO	RO	RO	RO	RO	RO	RO	RO	RO	RO	RO	RO	RO	RO	RO	RO
Reset	0	0	0	0	0	0	0	0	0	0	0	0	0	0	0	0

	15	14	13	12	11	10	9	8	7	6	5	4	3	2	1	0
	reserved												IN3	IN2	IN1	IN0
Type	RO	RO	RO	RO	RO	RO	RO	RO	RO	RO	RO	RO	R/W1C	R/W1C	R/W1C	R/W1C
Reset	0	0	0	0	0	0	0	0	0	0	0	0	0	0	0	0

Bit/Field	Name	Type	Reset	Description
31:4	reserved	RO	0x000	Software should not rely on the value of a reserved bit. To provide compatibility with future products, the value of a reserved bit should be preserved across a read-modify-write operation.
3	IN3	R/W1C	0	SS3 Interrupt Status and Clear This bit is set when both the `INR3` bit in the **ADCRIS** register and the `MASK3` bit in the **ADCIM** register are set, providing a level-based interrupt to the controller. This bit is cleared by writing a 1. Clearing this bit also clears the `INR3` bit.
2	IN2	R/W1C	0	SS2 Interrupt Status and Clear This bit is set when both the `INR2` bit in the **ADCRIS** register and the `MASK2` bit in the **ADCIM** register are set, providing a level-based interrupt to the controller. This bit is cleared by writing a 1. Clearing this bit also clears the `INR2` bit.
1	IN1	R/W1C	0	SS1 Interrupt Status and Clear This bit is set when both the `INR1` bit in the **ADCRIS** register and the `MASK1` bit in the **ADCIM** register are set, providing a level-based interrupt to the controller. This bit is cleared by writing a 1. Clearing this bit also clears the `INR1` bit.
0	IN0	R/W1C	0	SS0 Interrupt Status and Clear This bit is set when both the `INR0` bit in the **ADCRIS** register and the `MASK0` bit in the **ADCIM** register are set, providing a level-based interrupt to the controller. This bit is cleared by writing a 1. Clearing this bit also clears the `INR0` bit.

Register 5: ADC Overflow Status (ADCOSTAT), offset 0x010

This register indicates overflow conditions in the sample sequencer FIFOs. Once the overflow condition has been handled by software, the condition can be cleared by writing a 1 to the corresponding bit position.

ADC Overflow Status (ADCOSTAT)

Base 0x4003.8000
Offset 0x010
Type R/W1C, reset 0x0000.0000

	31	30	29	28	27	26	25	24	23	22	21	20	19	18	17	16
	reserved															
Type	RO	RO	RO	RO	RO	RO	RO	RO	RO	RO	RO	RO	RO	RO	RO	RO
Reset	0	0	0	0	0	0	0	0	0	0	0	0	0	0	0	0

	15	14	13	12	11	10	9	8	7	6	5	4	3	2	1	0
	reserved												OV3	OV2	OV1	OV0
Type	RO	RO	RO	RO	RO	RO	RO	RO	RO	RO	RO	RO	R/W1C	R/W1C	R/W1C	R/W1C
Reset	0	0	0	0	0	0	0	0	0	0	0	0	0	0	0	0

Bit/Field	Name	Type	Reset	Description
31:4	reserved	RO	0x0000.000	Software should not rely on the value of a reserved bit. To provide compatibility with future products, the value of a reserved bit should be preserved across a read-modify-write operation.
3	OV3	R/W1C	0	SS3 FIFO Overflow When set, this bit specifies that the FIFO for Sample Sequencer 3 has hit an overflow condition where the FIFO is full and a write was requested. When an overflow is detected, the most recent write is dropped. This bit is cleared by writing a 1.
2	OV2	R/W1C	0	SS2 FIFO Overflow When set, this bit specifies that the FIFO for Sample Sequencer 2 has hit an overflow condition where the FIFO is full and a write was requested. When an overflow is detected, the most recent write is dropped. This bit is cleared by writing a 1.
1	OV1	R/W1C	0	SS1 FIFO Overflow When set, this bit specifies that the FIFO for Sample Sequencer 1 has hit an overflow condition where the FIFO is full and a write was requested. When an overflow is detected, the most recent write is dropped. This bit is cleared by writing a 1.
0	OV0	R/W1C	0	SS0 FIFO Overflow When set, this bit specifies that the FIFO for Sample Sequencer 0 has hit an overflow condition where the FIFO is full and a write was requested. When an overflow is detected, the most recent write is dropped. This bit is cleared by writing a 1.

Register 6: ADC Event Multiplexer Select (ADCEMUX), offset 0x014

The **ADCEMUX** selects the event (trigger) that initiates sampling for each sample sequencer. Each sample sequencer can be configured with a unique trigger source.

ADC Event Multiplexer Select (ADCEMUX)

Base 0x4003.8000
Offset 0x014
Type R/W, reset 0x0000.0000

	31	30	29	28	27	26	25	24	23	22	21	20	19	18	17	16
	reserved															
Type	RO	RO	RO	RO	RO	RO	RO	RO	RO	RO	RO	RO	RO	RO	RO	RO
Reset	0	0	0	0	0	0	0	0	0	0	0	0	0	0	0	0

	15	14	13	12	11	10	9	8	7	6	5	4	3	2	1	0
	EM3				EM2				EM1				EM0			
Type	R/W	R/W	R/W	R/W	R/W	R/W	R/W	R/W	R/W	R/W	R/W	R/W	R/W	R/W	R/W	R/W
Reset	0	0	0	0	0	0	0	0	0	0	0	0	0	0	0	0

Bit/Field	Name	Type	Reset	Description
31:16	reserved	RO	0x0	Software should not rely on the value of a reserved bit. To provide compatibility with future products, the value of a reserved bit should be preserved across a read-modify-write operation.
15:12	EM3	R/W	0x0	SS3 Trigger Select This field selects the trigger source for Sample Sequencer 3. The valid configurations for this field are:

Value	Event
0x0	Controller (default)
0x1	Reserved
0x2	Reserved
0x3	Reserved
0x4	External (GPIO PB4)
0x5	Timer In addition, the trigger must be enabled with the `TnOTE` bit in the **GPTMCTL** register (see page 389).
0x6	PWM0 The PWM module 0 trigger can be configured with the **PWM0 Interrupt and Trigger Enable (PWM0INTEN)** register, see page 621.
0x7	PWM1 The PWM module 1 trigger can be configured with the **PWM1INTEN** register, see page 621.
0x8	PWM2 The PWM module 2 trigger can be configured with the **PWM2INTEN** register, see page 621.
0x9-0xE	reserved
0xF	Always (continuously sample)

Bit/Field	Name	Type	Reset	Description
11:8	EM2	R/W	0x0	SS2 Trigger Select This field selects the trigger source for Sample Sequencer 2. The valid configurations for this field are:

Value	Event
0x0	Controller (default)
0x1	Reserved
0x2	Reserved
0x3	Reserved
0x4	External (GPIO PB4)
0x5	Timer In addition, the trigger must be enabled with the `TnOTE` bit in the **GPTMCTL** register (see page 389).
0x6	PWM0 The PWM module 0 trigger can be configured with the **PWM0 Interrupt and Trigger Enable (PWM0INTEN)** register, see page 621.
0x7	PWM1 The PWM module 1 trigger can be configured with the **PWM1INTEN** register, see page 621.
0x8	PWM2 The PWM module 2 trigger can be configured with the **PWM2INTEN** register, see page 621.
0x9-0xE	reserved
0xF	Always (continuously sample)

Bit/Field	Name	Type	Reset	Description
7:4	EM1	R/W	0x0	SS1 Trigger Select This field selects the trigger source for Sample Sequencer 1. The valid configurations for this field are:

Value	Event
0x0	Controller (default)
0x1	Reserved
0x2	Reserved
0x3	Reserved
0x4	External (GPIO PB4)
0x5	Timer In addition, the trigger must be enabled with the `Tn0TE` bit in the **GPTMCTL** register (see page 389).
0x6	PWM0 The PWM module 0 trigger can be configured with the **PWM0 Interrupt and Trigger Enable (PWM0INTEN)** register, see page 621.
0x7	PWM1 The PWM module 1 trigger can be configured with the **PWM1INTEN** register, see page 621.
0x8	PWM2 The PWM module 2 trigger can be configured with the **PWM2INTEN** register, see page 621.
0x9-0xE	reserved
0xF	Always (continuously sample)

Bit/Field	Name	Type	Reset	Description
3:0	EM0	R/W	0x0	SS0 Trigger Select This field selects the trigger source for Sample Sequencer 0. The valid configurations for this field are:

Value	Event
0x0	Controller (default)
0x1	Reserved
0x2	Reserved
0x3	Reserved
0x4	External (GPIO PB4)
0x5	Timer In addition, the trigger must be enabled with the `Tn0TE` bit in the **GPTMCTL** register (see page 389).
0x6	PWM0 The PWM module 0 trigger can be configured with the **PWM0 Interrupt and Trigger Enable (PWM0INTEN)** register, see page 621.
0x7	PWM1 The PWM module 1 trigger can be configured with the **PWM1INTEN** register, see page 621.
0x8	PWM2 The PWM module 2 trigger can be configured with the **PWM2INTEN** register, see page 621.
0x9-0xE	reserved
0xF	Always (continuously sample)

Register 7: ADC Underflow Status (ADCUSTAT), offset 0x018

This register indicates underflow conditions in the sample sequencer FIFOs. The corresponding underflow condition is cleared by writing a 1 to the relevant bit position.

ADC Underflow Status (ADCUSTAT)

Base 0x4003.8000
Offset 0x018
Type R/W1C, reset 0x0000.0000

	31	30	29	28	27	26	25	24	23	22	21	20	19	18	17	16
	reserved															
Type	RO	RO	RO	RO	RO	RO	RO	RO	RO	RO	RO	RO	RO	RO	RO	RO
Reset	0	0	0	0	0	0	0	0	0	0	0	0	0	0	0	0

	15	14	13	12	11	10	9	8	7	6	5	4	3	2	1	0
	reserved												UV3	UV2	UV1	UV0
Type	RO	RO	RO	RO	RO	RO	RO	RO	RO	RO	RO	RO	R/W1C	R/W1C	R/W1C	R/W1C
Reset	0	0	0	0	0	0	0	0	0	0	0	0	0	0	0	0

Bit/Field	Name	Type	Reset	Description
31:4	reserved	RO	0x0000.000	Software should not rely on the value of a reserved bit. To provide compatibility with future products, the value of a reserved bit should be preserved across a read-modify-write operation.
3	UV3	R/W1C	0	SS3 FIFO Underflow When set, this bit specifies that the FIFO for Sample Sequencer 3 has hit an underflow condition where the FIFO is empty and a read was requested. The problematic read does not move the FIFO pointers, and 0s are returned. This bit is cleared by writing a 1.
2	UV2	R/W1C	0	SS2 FIFO Underflow When set, this bit specifies that the FIFO for Sample Sequencer 2 has hit an underflow condition where the FIFO is empty and a read was requested. The problematic read does not move the FIFO pointers, and 0s are returned. This bit is cleared by writing a 1.
1	UV1	R/W1C	0	SS1 FIFO Underflow When set, this bit specifies that the FIFO for Sample Sequencer 1 has hit an underflow condition where the FIFO is empty and a read was requested. The problematic read does not move the FIFO pointers, and 0s are returned. This bit is cleared by writing a 1.
0	UV0	R/W1C	0	SS0 FIFO Underflow When set, this bit specifies that the FIFO for Sample Sequencer 0 has hit an underflow condition where the FIFO is empty and a read was requested. The problematic read does not move the FIFO pointers, and 0s are returned. This bit is cleared by writing a 1.

Register 8: ADC Sample Sequencer Priority (ADCSSPRI), offset 0x020

This register sets the priority for each of the sample sequencers. Out of reset, Sequencer 0 has the highest priority, and Sequencer 3 has the lowest priority. When reconfiguring sequence priorities, each sequence must have a unique priority for the ADC to operate properly.

ADC Sample Sequencer Priority (ADCSSPRI)

Base 0x4003.8000
Offset 0x020
Type R/W, reset 0x0000.3210

	31	30	29	28	27	26	25	24	23	22	21	20	19	18	17	16
	reserved															
Type	RO	RO	RO	RO	RO	RO	RO	RO	RO	RO	RO	RO	RO	RO	RO	RO
Reset	0	0	0	0	0	0	0	0	0	0	0	0	0	0	0	0

	15	14	13	12	11	10	9	8	7	6	5	4	3	2	1	0
	reserved		SS3		reserved		SS2		reserved		SS1		reserved		SS0	
Type	RO	RO	R/W	R/W	RO	RO	R/W	R/W	RO	RO	R/W	R/W	RO	RO	R/W	R/W
Reset	0	0	1	1	0	0	1	0	0	0	0	1	0	0	0	0

Bit/Field	Name	Type	Reset	Description
31:14	reserved	RO	0x0000.0	Software should not rely on the value of a reserved bit. To provide compatibility with future products, the value of a reserved bit should be preserved across a read-modify-write operation.
13:12	SS3	R/W	0x3	SS3 Priority This field contains a binary-encoded value that specifies the priority encoding of Sample Sequencer 3. A priority encoding of 0 is highest and 3 is lowest. The priorities assigned to the sequencers must be uniquely mapped. The ADC may not operate properly if two or more fields are equal.
11:10	reserved	RO	0x0	Software should not rely on the value of a reserved bit. To provide compatibility with future products, the value of a reserved bit should be preserved across a read-modify-write operation.
9:8	SS2	R/W	0x2	SS2 Priority This field contains a binary-encoded value that specifies the priority encoding of Sample Sequencer 2. A priority encoding of 0 is highest and 3 is lowest. The priorities assigned to the sequencers must be uniquely mapped. The ADC may not operate properly if two or more fields are equal.
7:6	reserved	RO	0x0	Software should not rely on the value of a reserved bit. To provide compatibility with future products, the value of a reserved bit should be preserved across a read-modify-write operation.
5:4	SS1	R/W	0x1	SS1 Priority This field contains a binary-encoded value that specifies the priority encoding of Sample Sequencer 1. A priority encoding of 0 is highest and 3 is lowest. The priorities assigned to the sequencers must be uniquely mapped. The ADC may not operate properly if two or more fields are equal.
3:2	reserved	RO	0x0	Software should not rely on the value of a reserved bit. To provide compatibility with future products, the value of a reserved bit should be preserved across a read-modify-write operation.

Bit/Field	Name	Type	Reset	Description
1:0	SS0	R/W	0x0	SS0 Priority This field contains a binary-encoded value that specifies the priority encoding of Sample Sequencer 0. A priority encoding of 0 is highest and 3 is lowest. The priorities assigned to the sequencers must be uniquely mapped. The ADC may not operate properly if two or more fields are equal.

Register 9: ADC Processor Sample Sequence Initiate (ADCPSSI), offset 0x028

This register provides a mechanism for application software to initiate sampling in the sample sequencers. Sample sequences can be initiated individually or in any combination. When multiple sequences are triggered simultaneously, the priority encodings in **ADCSSPRI** dictate execution order.

ADC Processor Sample Sequence Initiate (ADCPSSI)

Base 0x4003.8000
Offset 0x028
Type WO, reset -

	31	30	29	28	27	26	25	24	23	22	21	20	19	18	17	16
	reserved															
Type	RO	RO	RO	RO	RO	RO	RO	RO	RO	RO	RO	RO	RO	RO	RO	RO
Reset	0	0	0	0	0	0	0	0	0	0	0	0	0	0	0	0

	15	14	13	12	11	10	9	8	7	6	5	4	3	2	1	0
	reserved												SS3	SS2	SS1	SS0
Type	RO	RO	RO	RO	RO	RO	RO	RO	RO	RO	RO	RO	WO	WO	WO	WO
Reset	0	0	0	0	0	0	0	0	0	0	0	0	-	-	-	-

Bit/Field	Name	Type	Reset	Description
31:4	reserved	RO	0	Software should not rely on the value of a reserved bit. To provide compatibility with future products, the value of a reserved bit should be preserved across a read-modify-write operation.
3	SS3	WO	-	SS3 Initiate When set, this bit triggers sampling on Sample Sequencer 3 if the sequencer is enabled in the **ADCACTSS** register. Only a write by software is valid; a read of this register returns no meaningful data.
2	SS2	WO	-	SS2 Initiate When set, this bit triggers sampling on Sample Sequencer 2 if the sequencer is enabled in the **ADCACTSS** register. Only a write by software is valid; a read of this register returns no meaningful data.
1	SS1	WO	-	SS1 Initiate When set, this bit triggers sampling on Sample Sequencer 1 if the sequencer is enabled in the **ADCACTSS** register. Only a write by software is valid; a read of this register returns no meaningful data.
0	SS0	WO	-	SS0 Initiate When set, this bit triggers sampling on Sample Sequencer 0 if the sequencer is enabled in the **ADCACTSS** register. Only a write by software is valid; a read of this register returns no meaningful data.

Register 10: ADC Sample Averaging Control (ADCSAC), offset 0x030

This register controls the amount of hardware averaging applied to conversion results. The final conversion result stored in the FIFO is averaged from 2^{AVG} consecutive ADC samples at the specified ADC speed. If AVG is 0, the sample is passed directly through without any averaging. If AVG=6, then 64 consecutive ADC samples are averaged to generate one result in the sequencer FIFO. An AVG = 7 provides unpredictable results.

ADC Sample Averaging Control (ADCSAC)

Base 0x4003.8000
Offset 0x030
Type R/W, reset 0x0000.0000

	31	30	29	28	27	26	25	24	23	22	21	20	19	18	17	16
	reserved															
Type	RO	RO	RO	RO	RO	RO	RO	RO	RO	RO	RO	RO	RO	RO	RO	RO
Reset	0	0	0	0	0	0	0	0	0	0	0	0	0	0	0	0

	15	14	13	12	11	10	9	8	7	6	5	4	3	2	1	0
	reserved													AVG		
Type	RO	RO	RO	RO	RO	RO	RO	RO	RO	RO	RO	RO	RO	R/W	R/W	R/W
Reset	0	0	0	0	0	0	0	0	0	0	0	0	0	0	0	0

Bit/Field	Name	Type	Reset	Description
31:3	reserved	RO	0x0000.000	Software should not rely on the value of a reserved bit. To provide compatibility with future products, the value of a reserved bit should be preserved across a read-modify-write operation.
2:0	AVG	R/W	0x0	Hardware Averaging Control Specifies the amount of hardware averaging that will be applied to ADC samples. The AVG field can be any value between 0 and 6. Entering a value of 7 creates unpredictable results. Value Description 0x0 No hardware oversampling 0x1 2x hardware oversampling 0x2 4x hardware oversampling 0x3 8x hardware oversampling 0x4 16x hardware oversampling 0x5 32x hardware oversampling 0x6 64x hardware oversampling 0x7 Reserved

Register 11: ADC Sample Sequence Input Multiplexer Select 0 (ADCSSMUX0), offset 0x040

This register defines the analog input configuration for each sample in a sequence executed with Sample Sequencer 0. This register is 32 bits wide and contains information for eight possible samples.

ADC Sample Sequence Input Multiplexer Select 0 (ADCSSMUX0)

Base 0x4003.8000
Offset 0x040
Type R/W, reset 0x0000.0000

	31	30	29	28	27	26	25	24	23	22	21	20	19	18	17	16
	reserved	MUX7			reserved	MUX6			reserved	MUX5			reserved	MUX4		
Type	RO	R/W	R/W	R/W	RO	R/W	R/W	R/W	RO	R/W	R/W	R/W	RO	R/W	R/W	R/W
Reset	0	0	0	0	0	0	0	0	0	0	0	0	0	0	0	0

	15	14	13	12	11	10	9	8	7	6	5	4	3	2	1	0
	reserved	MUX3			reserved	MUX2			reserved	MUX1			reserved	MUX0		
Type	RO	R/W	R/W	R/W	RO	R/W	R/W	R/W	RO	R/W	R/W	R/W	RO	R/W	R/W	R/W
Reset	0	0	0	0	0	0	0	0	0	0	0	0	0	0	0	0

Bit/Field	Name	Type	Reset	Description
31	reserved	RO	0	Software should not rely on the value of a reserved bit. To provide compatibility with future products, the value of a reserved bit should be preserved across a read-modify-write operation.
30:28	MUX7	R/W	0x0	8th Sample Input Select The `MUX7` field is used during the eighth sample of a sequence executed with the sample sequencer. It specifies which of the analog inputs is sampled for the analog-to-digital conversion. The value set here indicates the corresponding pin, for example, a value of 1 indicates the input is `ADC1`.
27	reserved	RO	0	Software should not rely on the value of a reserved bit. To provide compatibility with future products, the value of a reserved bit should be preserved across a read-modify-write operation.
26:24	MUX6	R/W	0x0	7th Sample Input Select The `MUX6` field is used during the seventh sample of a sequence executed with the sample sequencer. It specifies which of the analog inputs is sampled for the analog-to-digital conversion.
23	reserved	RO	0	Software should not rely on the value of a reserved bit. To provide compatibility with future products, the value of a reserved bit should be preserved across a read-modify-write operation.
22:20	MUX5	R/W	0x0	6th Sample Input Select The `MUX5` field is used during the sixth sample of a sequence executed with the sample sequencer. It specifies which of the analog inputs is sampled for the analog-to-digital conversion.
19	reserved	RO	0	Software should not rely on the value of a reserved bit. To provide compatibility with future products, the value of a reserved bit should be preserved across a read-modify-write operation.

Bit/Field	Name	Type	Reset	Description
18:16	MUX4	R/W	0x0	5th Sample Input Select The `MUX4` field is used during the fifth sample of a sequence executed with the sample sequencer. It specifies which of the analog inputs is sampled for the analog-to-digital conversion.
15	reserved	RO	0	Software should not rely on the value of a reserved bit. To provide compatibility with future products, the value of a reserved bit should be preserved across a read-modify-write operation.
14:12	MUX3	R/W	0x0	4th Sample Input Select The `MUX3` field is used during the fourth sample of a sequence executed with the sample sequencer. It specifies which of the analog inputs is sampled for the analog-to-digital conversion.
11	reserved	RO	0	Software should not rely on the value of a reserved bit. To provide compatibility with future products, the value of a reserved bit should be preserved across a read-modify-write operation.
10:8	MUX2	R/W	0x0	3rd Sample Input Select The `MUX72` field is used during the third sample of a sequence executed with the sample sequencer. It specifies which of the analog inputs is sampled for the analog-to-digital conversion.
7	reserved	RO	0	Software should not rely on the value of a reserved bit. To provide compatibility with future products, the value of a reserved bit should be preserved across a read-modify-write operation.
6:4	MUX1	R/W	0x0	2nd Sample Input Select The `MUX1` field is used during the second sample of a sequence executed with the sample sequencer. It specifies which of the analog inputs is sampled for the analog-to-digital conversion.
3	reserved	RO	0	Software should not rely on the value of a reserved bit. To provide compatibility with future products, the value of a reserved bit should be preserved across a read-modify-write operation.
2:0	MUX0	R/W	0x0	1st Sample Input Select The `MUX0` field is used during the first sample of a sequence executed with the sample sequencer. It specifies which of the analog inputs is sampled for the analog-to-digital conversion.

Register 12: ADC Sample Sequence Control 0 (ADCSSCTL0), offset 0x044

This register contains the configuration information for each sample for a sequence executed with a sample sequencer. When configuring a sample sequence, the END bit must be set at some point, whether it be after the first sample, last sample, or any sample in between. This register is 32-bits wide and contains information for eight possible samples.

ADC Sample Sequence Control 0 (ADCSSCTL0)

Base 0x4003.8000
Offset 0x044
Type R/W, reset 0x0000.0000

	31	30	29	28	27	26	25	24	23	22	21	20	19	18	17	16
	TS7	IE7	END7	D7	TS6	IE6	END6	D6	TS5	IE5	END5	D5	TS4	IE4	END4	D4
Type	R/W	R/W	R/W	R/W	R/W	R/W	R/W	R/W	R/W	R/W	R/W	R/W	R/W	R/W	R/W	R/W
Reset	0	0	0	0	0	0	0	0	0	0	0	0	0	0	0	0

	15	14	13	12	11	10	9	8	7	6	5	4	3	2	1	0
	TS3	IE3	END3	D3	TS2	IE2	END2	D2	TS1	IE1	END1	D1	TS0	IE0	END0	D0
Type	R/W	R/W	R/W	R/W	R/W	R/W	R/W	R/W	R/W	R/W	R/W	R/W	R/W	R/W	R/W	R/W
Reset	0	0	0	0	0	0	0	0	0	0	0	0	0	0	0	0

Bit/Field	Name	Type	Reset	Description
31	TS7	R/W	0	8th Sample Temp Sensor Select This bit is used during the eighth sample of the sample sequence and and specifies the input source of the sample. When set, the temperature sensor is read. When clear, the input pin specified by the **ADCSSMUX** register is read.
30	IE7	R/W	0	8th Sample Interrupt Enable This bit is used during the eighth sample of the sample sequence and specifies whether the raw interrupt signal (INR0 bit) is asserted at the end of the sample's conversion. If the MASK0 bit in the **ADCIM** register is set, the interrupt is promoted to a controller-level interrupt. When this bit is set, the raw interrupt is asserted. When this bit is clear, the raw interrupt is not asserted. It is legal to have multiple samples within a sequence generate interrupts.
29	END7	R/W	0	8th Sample is End of Sequence The END7 bit indicates that this is the last sample of the sequence. It is possible to end the sequence on any sample position. Samples defined after the sample containing a set END are not requested for conversion even though the fields may be non-zero. It is required that software write the END bit somewhere within the sequence. (Sample Sequencer 3, which only has a single sample in the sequence, is hardwired to have the END0 bit set.) Setting this bit indicates that this sample is the last in the sequence.
28	D7	R/W	0	8th Sample Diff Input Select The D7 bit indicates that the analog input is to be differentially sampled. The corresponding **ADCSSMUXx** nibble must be set to the pair number "i", where the paired inputs are "2i and 2i+1". The temperature sensor does not have a differential option. When set, the analog inputs are differentially sampled.
27	TS6	R/W	0	7th Sample Temp Sensor Select Same definition as TS7 but used during the seventh sample.

Bit/Field	Name	Type	Reset	Description
26	IE6	R/W	0	7th Sample Interrupt Enable Same definition as `IE7` but used during the seventh sample.
25	END6	R/W	0	7th Sample is End of Sequence Same definition as `END7` but used during the seventh sample.
24	D6	R/W	0	7th Sample Diff Input Select Same definition as `D7` but used during the seventh sample.
23	TS5	R/W	0	6th Sample Temp Sensor Select Same definition as `TS7` but used during the sixth sample.
22	IE5	R/W	0	6th Sample Interrupt Enable Same definition as `IE7` but used during the sixth sample.
21	END5	R/W	0	6th Sample is End of Sequence Same definition as `END7` but used during the sixth sample.
20	D5	R/W	0	6th Sample Diff Input Select Same definition as `D7` but used during the sixth sample.
19	TS4	R/W	0	5th Sample Temp Sensor Select Same definition as `TS7` but used during the fifth sample.
18	IE4	R/W	0	5th Sample Interrupt Enable Same definition as `IE7` but used during the fifth sample.
17	END4	R/W	0	5th Sample is End of Sequence Same definition as `END7` but used during the fifth sample.
16	D4	R/W	0	5th Sample Diff Input Select Same definition as `D7` but used during the fifth sample.
15	TS3	R/W	0	4th Sample Temp Sensor Select Same definition as `TS7` but used during the fourth sample.
14	IE3	R/W	0	4th Sample Interrupt Enable Same definition as `IE7` but used during the fourth sample.
13	END3	R/W	0	4th Sample is End of Sequence Same definition as `END7` but used during the fourth sample.
12	D3	R/W	0	4th Sample Diff Input Select Same definition as `D7` but used during the fourth sample.
11	TS2	R/W	0	3rd Sample Temp Sensor Select Same definition as `TS7` but used during the third sample.
10	IE2	R/W	0	3rd Sample Interrupt Enable Same definition as `IE7` but used during the third sample.
9	END2	R/W	0	3rd Sample is End of Sequence Same definition as `END7` but used during the third sample.

Bit/Field	Name	Type	Reset	Description
8	D2	R/W	0	3rd Sample Diff Input Select Same definition as `D7` but used during the third sample.
7	TS1	R/W	0	2nd Sample Temp Sensor Select Same definition as `TS7` but used during the second sample.
6	IE1	R/W	0	2nd Sample Interrupt Enable Same definition as `IE7` but used during the second sample.
5	END1	R/W	0	2nd Sample is End of Sequence Same definition as `END7` but used during the second sample.
4	D1	R/W	0	2nd Sample Diff Input Select Same definition as `D7` but used during the second sample.
3	TS0	R/W	0	1st Sample Temp Sensor Select Same definition as `TS7` but used during the first sample.
2	IE0	R/W	0	1st Sample Interrupt Enable Same definition as `IE7` but used during the first sample.
1	END0	R/W	0	1st Sample is End of Sequence Same definition as `END7` but used during the first sample.
0	D0	R/W	0	1st Sample Diff Input Select Same definition as `D7` but used during the first sample.

Register 13: ADC Sample Sequence Result FIFO 0 (ADCSSFIFO0), offset 0x048

Register 14: ADC Sample Sequence Result FIFO 1 (ADCSSFIFO1), offset 0x068

Register 15: ADC Sample Sequence Result FIFO 2 (ADCSSFIFO2), offset 0x088

Register 16: ADC Sample Sequence Result FIFO 3 (ADCSSFIFO3), offset 0x0A8

Important: This register is read-sensitive. See the register description for details.

This register contains the conversion results for samples collected with the sample sequencer (the **ADCSSFIFO0** register is used for Sample Sequencer 0, **ADCSSFIFO1** for Sequencer 1, **ADCSSFIFO2** for Sequencer 2, and **ADCSSFIFO3** for Sequencer 3). Reads of this register return conversion result data in the order sample 0, sample 1, and so on, until the FIFO is empty. If the FIFO is not properly handled by software, overflow and underflow conditions are registered in the **ADCOSTAT** and **ADCUSTAT** registers.

ADC Sample Sequence Result FIFO 0 (ADCSSFIFO0)

Base 0x4003.8000
Offset 0x048
Type RO, reset -

	31	30	29	28	27	26	25	24	23	22	21	20	19	18	17	16
	reserved															
Type	RO	RO	RO	RO	RO	RO	RO	RO	RO	RO	RO	RO	RO	RO	RO	RO
Reset	-	-	-	-	-	-	-	-	-	-	-	-	-	-	-	-

	15	14	13	12	11	10	9	8	7	6	5	4	3	2	1	0
	reserved						DATA									
Type	RO	RO	RO	RO	RO	RO	RO	RO	RO	RO	RO	RO	RO	RO	RO	RO
Reset	-	-	-	-	-	-	-	-	-	-	-	-	-	-	-	-

Bit/Field	Name	Type	Reset	Description
31:10	reserved	RO	-	Software should not rely on the value of a reserved bit. To provide compatibility with future products, the value of a reserved bit should be preserved across a read-modify-write operation.
9:0	DATA	RO	-	Conversion Result Data

Register 17: ADC Sample Sequence FIFO 0 Status (ADCSSFSTAT0), offset 0x04C

Register 18: ADC Sample Sequence FIFO 1 Status (ADCSSFSTAT1), offset 0x06C

Register 19: ADC Sample Sequence FIFO 2 Status (ADCSSFSTAT2), offset 0x08C

Register 20: ADC Sample Sequence FIFO 3 Status (ADCSSFSTAT3), offset 0x0AC

This register provides a window into the sample sequencer, providing full/empty status information as well as the positions of the head and tail pointers. The reset value of 0x100 indicates an empty FIFO. The **ADCSSFSTAT0** register provides status on FIFO0, **ADCSSFSTAT1** on FIFO1, **ADCSSFSTAT2** on FIFO2, and **ADCSSFSTAT3** on FIFO3.

ADC Sample Sequence FIFO 0 Status (ADCSSFSTAT0)

Base 0x4003.8000
Offset 0x04C
Type RO, reset 0x0000.0100

	31	30	29	28	27	26	25	24	23	22	21	20	19	18	17	16
	reserved															
Type	RO	RO	RO	RO	RO	RO	RO	RO	RO	RO	RO	RO	RO	RO	RO	RO
Reset	0	0	0	0	0	0	0	0	0	0	0	0	0	0	0	0

	15	14	13	12	11	10	9	8	7	6	5	4	3	2	1	0
	reserved			FULL	reserved			EMPTY	HPTR				TPTR			
Type	RO	RO	RO	RO	RO	RO	RO	RO	RO	RO	RO	RO	RO	RO	RO	RO
Reset	0	0	0	0	0	0	0	1	0	0	0	0	0	0	0	0

Bit/Field	Name	Type	Reset	Description
31:13	reserved	RO	0x0	Software should not rely on the value of a reserved bit. To provide compatibility with future products, the value of a reserved bit should be preserved across a read-modify-write operation.
12	FULL	RO	0	FIFO Full When set, this bit indicates that the FIFO is currently full.
11:9	reserved	RO	0x0	Software should not rely on the value of a reserved bit. To provide compatibility with future products, the value of a reserved bit should be preserved across a read-modify-write operation.
8	EMPTY	RO	1	FIFO Empty When set, this bit indicates that the FIFO is currently empty.
7:4	HPTR	RO	0x0	FIFO Head Pointer This field contains the current "head" pointer index for the FIFO, that is, the next entry to be written.
3:0	TPTR	RO	0x0	FIFO Tail Pointer This field contains the current "tail" pointer index for the FIFO, that is, the next entry to be read.

Register 21: ADC Sample Sequence Input Multiplexer Select 1 (ADCSSMUX1), offset 0x060

Register 22: ADC Sample Sequence Input Multiplexer Select 2 (ADCSSMUX2), offset 0x080

This register defines the analog input configuration for each sample in a sequence executed with Sample Sequencer 1 or 2. These registers are 16-bits wide and contain information for four possible samples. See the **ADCSSMUX0** register on page 454 for detailed bit descriptions. The **ADCSSMUX1** register affects Sample Sequencer 1 and the **ADCSSMUX2** register affects Sample Sequencer 2.

ADC Sample Sequence Input Multiplexer Select 1 (ADCSSMUX1)

Base 0x4003.8000
Offset 0x060
Type R/W, reset 0x0000.0000

	31	30	29	28	27	26	25	24	23	22	21	20	19	18	17	16
	reserved															
Type	RO	RO	RO	RO	RO	RO	RO	RO	RO	RO	RO	RO	RO	RO	RO	RO
Reset	0	0	0	0	0	0	0	0	0	0	0	0	0	0	0	0

	15	14	13	12	11	10	9	8	7	6	5	4	3	2	1	0
	reserved	MUX3			reserved	MUX2			reserved	MUX1			reserved	MUX0		
Type	RO	R/W	R/W	R/W	RO	R/W	R/W	R/W	RO	R/W	R/W	R/W	RO	R/W	R/W	R/W
Reset	0	0	0	0	0	0	0	0	0	0	0	0	0	0	0	0

Bit/Field	Name	Type	Reset	Description
31:15	reserved	RO	0x0000	Software should not rely on the value of a reserved bit. To provide compatibility with future products, the value of a reserved bit should be preserved across a read-modify-write operation.
14:12	MUX3	R/W	0x0	4th Sample Input Select
11	reserved	RO	0	Software should not rely on the value of a reserved bit. To provide compatibility with future products, the value of a reserved bit should be preserved across a read-modify-write operation.
10:8	MUX2	R/W	0x0	3rd Sample Input Select
7	reserved	RO	0	Software should not rely on the value of a reserved bit. To provide compatibility with future products, the value of a reserved bit should be preserved across a read-modify-write operation.
6:4	MUX1	R/W	0x0	2nd Sample Input Select
3	reserved	RO	0	Software should not rely on the value of a reserved bit. To provide compatibility with future products, the value of a reserved bit should be preserved across a read-modify-write operation.
2:0	MUX0	R/W	0x0	1st Sample Input Select

Register 23: ADC Sample Sequence Control 1 (ADCSSCTL1), offset 0x064

Register 24: ADC Sample Sequence Control 2 (ADCSSCTL2), offset 0x084

These registers contain the configuration information for each sample for a sequence executed with Sample Sequencer 1 or 2. When configuring a sample sequence, the `END` bit must be set at some point, whether it be after the first sample, last sample, or any sample in between. These registers are 16-bits wide and contain information for four possible samples. See the **ADCSSCTL0** register on page 456 for detailed bit descriptions. The **ADCSSCTL1** register configures Sample Sequencer 1 and the **ADCSSCTL2** register configures Sample Sequencer 2.

ADC Sample Sequence Control 1 (ADCSSCTL1)

Base 0x4003.8000
Offset 0x064
Type R/W, reset 0x0000.0000

	31	30	29	28	27	26	25	24	23	22	21	20	19	18	17	16
	reserved															
Type	RO	RO	RO	RO	RO	RO	RO	RO	RO	RO	RO	RO	RO	RO	RO	RO
Reset	0	0	0	0	0	0	0	0	0	0	0	0	0	0	0	0

	15	14	13	12	11	10	9	8	7	6	5	4	3	2	1	0
	TS3	IE3	END3	D3	TS2	IE2	END2	D2	TS1	IE1	END1	D1	TS0	IE0	END0	D0
Type	R/W	R/W	R/W	R/W	R/W	R/W	R/W	R/W	R/W	R/W	R/W	R/W	R/W	R/W	R/W	R/W
Reset	0	0	0	0	0	0	0	0	0	0	0	0	0	0	0	0

Bit/Field	Name	Type	Reset	Description
31:16	reserved	RO	0x0000	Software should not rely on the value of a reserved bit. To provide compatibility with future products, the value of a reserved bit should be preserved across a read-modify-write operation.
15	TS3	R/W	0	4th Sample Temp Sensor Select Same definition as `TS7` but used during the fourth sample.
14	IE3	R/W	0	4th Sample Interrupt Enable Same definition as `IE7` but used during the fourth sample.
13	END3	R/W	0	4th Sample is End of Sequence Same definition as `END7` but used during the fourth sample.
12	D3	R/W	0	4th Sample Diff Input Select Same definition as `D7` but used during the fourth sample.
11	TS2	R/W	0	3rd Sample Temp Sensor Select Same definition as `TS7` but used during the third sample.
10	IE2	R/W	0	3rd Sample Interrupt Enable Same definition as `IE7` but used during the third sample.
9	END2	R/W	0	3rd Sample is End of Sequence Same definition as `END7` but used during the third sample.
8	D2	R/W	0	3rd Sample Diff Input Select Same definition as `D7` but used during the third sample.
7	TS1	R/W	0	2nd Sample Temp Sensor Select Same definition as `TS7` but used during the second sample.

Bit/Field	Name	Type	Reset	Description
6	IE1	R/W	0	2nd Sample Interrupt Enable Same definition as `IE7` but used during the second sample.
5	END1	R/W	0	2nd Sample is End of Sequence Same definition as `END7` but used during the second sample.
4	D1	R/W	0	2nd Sample Diff Input Select Same definition as `D7` but used during the second sample.
3	TS0	R/W	0	1st Sample Temp Sensor Select Same definition as `TS7` but used during the first sample.
2	IE0	R/W	0	1st Sample Interrupt Enable Same definition as `IE7` but used during the first sample.
1	END0	R/W	0	1st Sample is End of Sequence Same definition as `END7` but used during the first sample.
0	D0	R/W	0	1st Sample Diff Input Select Same definition as `D7` but used during the first sample.

Register 25: ADC Sample Sequence Input Multiplexer Select 3 (ADCSSMUX3), offset 0x0A0

This register defines the analog input configuration for a sample executed with Sample Sequencer 3. This register is 4-bits wide and contains information for one possible sample. See the **ADCSSMUX0** register on page 454 for detailed bit descriptions.

ADC Sample Sequence Input Multiplexer Select 3 (ADCSSMUX3)

Base 0x4003.8000
Offset 0x0A0
Type R/W, reset 0x0000.0000

	31	30	29	28	27	26	25	24	23	22	21	20	19	18	17	16
	reserved															
Type	RO	RO	RO	RO	RO	RO	RO	RO	RO	RO	RO	RO	RO	RO	RO	RO
Reset	0	0	0	0	0	0	0	0	0	0	0	0	0	0	0	0

	15	14	13	12	11	10	9	8	7	6	5	4	3	2	1	0
	reserved													MUX0		
Type	RO	RO	RO	RO	RO	RO	RO	RO	RO	RO	RO	RO	RO	R/W	R/W	R/W
Reset	0	0	0	0	0	0	0	0	0	0	0	0	0	0	0	0

Bit/Field	Name	Type	Reset	Description
31:3	reserved	RO	0x0000.000	Software should not rely on the value of a reserved bit. To provide compatibility with future products, the value of a reserved bit should be preserved across a read-modify-write operation.
2:0	MUX0	R/W	0	1st Sample Input Select

Register 26: ADC Sample Sequence Control 3 (ADCSSCTL3), offset 0x0A4

This register contains the configuration information for a sample executed with Sample Sequencer 3. The END bit is always set since there is only one sample in this sequencer. This register is 4-bits wide and contains information for one possible sample. See the **ADCSSCTL0** register on page 456 for detailed bit descriptions.

ADC Sample Sequence Control 3 (ADCSSCTL3)

Base 0x4003.8000
Offset 0x0A4
Type R/W, reset 0x0000.0002

	31	30	29	28	27	26	25	24	23	22	21	20	19	18	17	16
	reserved															
Type	RO	RO	RO	RO	RO	RO	RO	RO	RO	RO	RO	RO	RO	RO	RO	RO
Reset	0	0	0	0	0	0	0	0	0	0	0	0	0	0	0	0

	15	14	13	12	11	10	9	8	7	6	5	4	3	2	1	0
	reserved												TS0	IE0	END0	D0
Type	RO	RO	RO	RO	RO	RO	RO	RO	RO	RO	RO	RO	R/W	R/W	R/W	R/W
Reset	0	0	0	0	0	0	0	0	0	0	0	0	0	0	1	0

Bit/Field	Name	Type	Reset	Description
31:4	reserved	RO	0x0000.000	Software should not rely on the value of a reserved bit. To provide compatibility with future products, the value of a reserved bit should be preserved across a read-modify-write operation.
3	TS0	R/W	0	1st Sample Temp Sensor Select Same definition as TS7 but used during the first sample.
2	IE0	R/W	0	1st Sample Interrupt Enable Same definition as IE7 but used during the first sample.
1	END0	R/W	1	1st Sample is End of Sequence Same definition as END7 but used during the first sample. Since this sequencer has only one entry, this bit must be set.
0	D0	R/W	0	1st Sample Diff Input Select Same definition as D7 but used during the first sample.

12 Universal Asynchronous Receivers/Transmitters (UARTs)

The Stellaris® Universal Asynchronous Receiver/Transmitter (UART) has the following features:

- Fully programmable 16C550-type UART with IrDA support
- Separate 16x8 transmit (TX) and receive (RX) FIFOs to reduce CPU interrupt service loading
- Programmable baud-rate generator allowing speeds up to 3.125 Mbps
- Programmable FIFO length, including 1-byte deep operation providing conventional double-buffered interface
- FIFO trigger levels of 1/8, 1/4, 1/2, 3/4, and 7/8
- Standard asynchronous communication bits for start, stop, and parity
- Line-break generation and detection
- Fully programmable serial interface characteristics
  - 5, 6, 7, or 8 data bits
  - Even, odd, stick, or no-parity bit generation/detection
  - 1 or 2 stop bit generation
- IrDA serial-IR (SIR) encoder/decoder providing
  - Programmable use of IrDA Serial Infrared (SIR) or UART input/output
  - Support of IrDA SIR encoder/decoder functions for data rates up to 115.2 Kbps half-duplex
  - Support of normal 3/16 and low-power (1.41-2.23 µs) bit durations
  - Programmable internal clock generator enabling division of reference clock by 1 to 256 for low-power mode bit duration
- Dedicated Direct Memory Access (DMA) transmit and receive channels

12.1 Block Diagram

Figure 12-1. UART Module Block Diagram

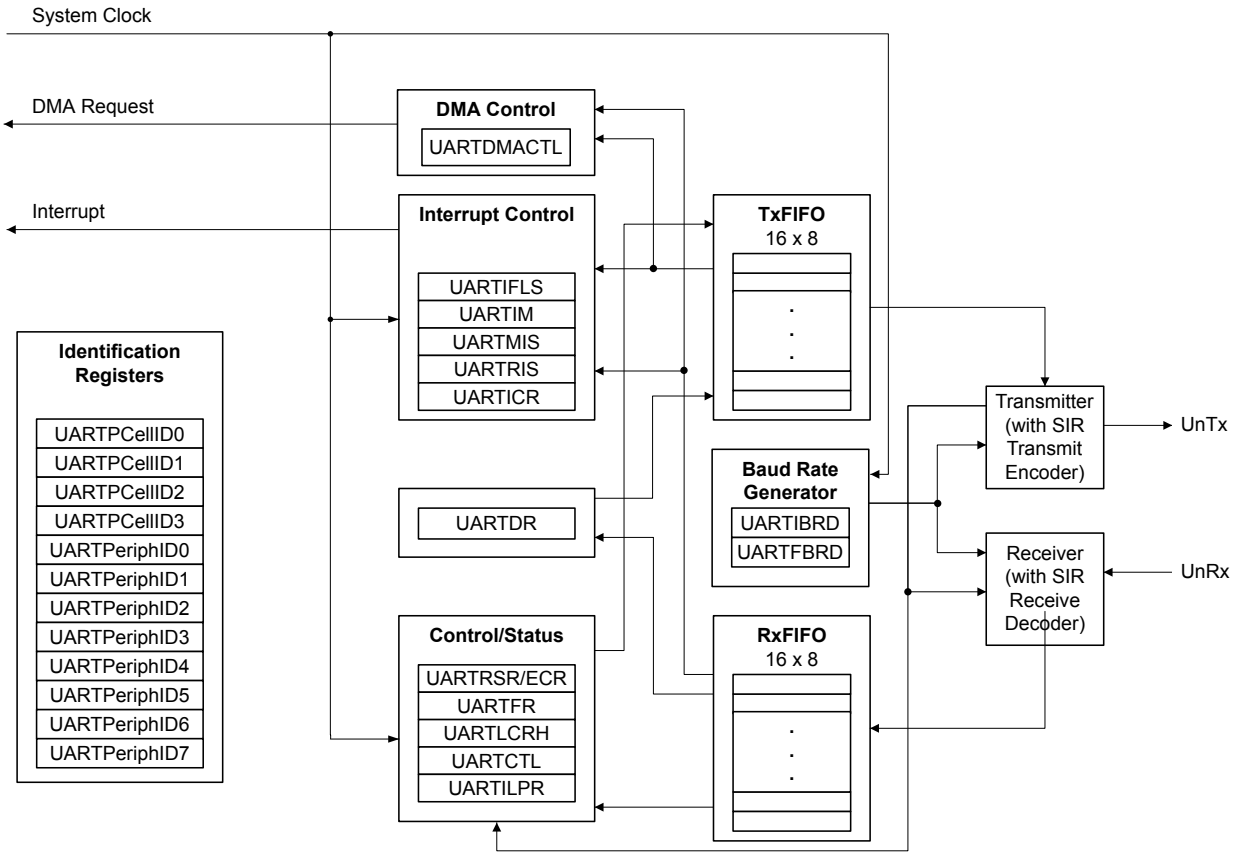

12.2 Signal Description

Table 12-1 on page 467 lists the external signals of the UART module and describes the function of each. The UART signals are alternate functions for some GPIO signals and default to be GPIO signals at reset, with the exception of the `U0Rx` and `U0Tx` pins which default to the UART function. The column in the table below titled "Pin Assignment" lists the possible GPIO pin placements for these UART signals. The `AFSEL` bit in the **GPIO Alternate Function Select (GPIOAFSEL)** register (page 344) should be set to choose the UART function. For more information on configuring GPIOs, see “General-Purpose Input/Outputs (GPIOs)” on page 324.

Table 12-1. UART Signals (64LQFP)

Pin Name	Pin Number	Pin Type	Buffer Type[a]	Description
`U0Rx`	17	I	TTL	UART module 0 receive. When in IrDA mode, this signal has IrDA modulation.
`U0Tx`	18	O	TTL	UART module 0 transmit. When in IrDA mode, this signal has IrDA modulation.

a. The TTL designation indicates the pin has TTL-compatible voltage levels.

12.3 Functional Description

Each Stellaris UART performs the functions of parallel-to-serial and serial-to-parallel conversions. It is similar in functionality to a 16C550 UART, but is not register compatible.

The UART is configured for transmit and/or receive via the TXE and RXE bits of the **UART Control (UARTCTL)** register (see page 486). Transmit and receive are both enabled out of reset. Before any control registers are programmed, the UART must be disabled by clearing the UARTEN bit in **UARTCTL**. If the UART is disabled during a TX or RX operation, the current transaction is completed prior to the UART stopping.

The UART peripheral also includes a serial IR (SIR) encoder/decoder block that can be connected to an infrared transceiver to implement an IrDA SIR physical layer. The SIR function is programmed using the UARTCTL register.

12.3.1 Transmit/Receive Logic

The transmit logic performs parallel-to-serial conversion on the data read from the transmit FIFO. The control logic outputs the serial bit stream beginning with a start bit, and followed by the data bits (LSB first), parity bit, and the stop bits according to the programmed configuration in the control registers. See Figure 12-2 on page 468 for details.

The receive logic performs serial-to-parallel conversion on the received bit stream after a valid start pulse has been detected. Overrun, parity, frame error checking, and line-break detection are also performed, and their status accompanies the data that is written to the receive FIFO.

Figure 12-2. UART Character Frame

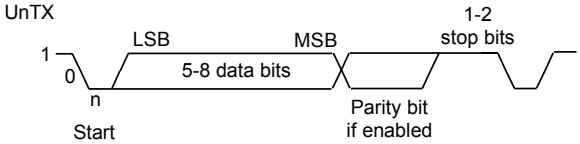

12.3.2 Baud-Rate Generation

The baud-rate divisor is a 22-bit number consisting of a 16-bit integer and a 6-bit fractional part. The number formed by these two values is used by the baud-rate generator to determine the bit period. Having a fractional baud-rate divider allows the UART to generate all the standard baud rates.

The 16-bit integer is loaded through the **UART Integer Baud-Rate Divisor (UARTIBRD)** register (see page 482) and the 6-bit fractional part is loaded with the **UART Fractional Baud-Rate Divisor (UARTFBRD)** register (see page 483). The baud-rate divisor (BRD) has the following relationship to the system clock (where *BRDI* is the integer part of the BRD and *BRDF* is the fractional part, separated by a decimal place.)

```
BRD = BRDI + BRDF = UARTSysClk / (16 * Baud Rate)
```

where UARTSysClk is the system clock connected to the UART.

The 6-bit fractional number (that is to be loaded into the DIVFRAC bit field in the **UARTFBRD** register) can be calculated by taking the fractional part of the baud-rate divisor, multiplying it by 64, and adding 0.5 to account for rounding errors:

```
UARTFBRD[DIVFRAC] = integer(BRDF * 64 + 0.5)
```

The UART generates an internal baud-rate reference clock at 16x the baud-rate (referred to as Baud16). This reference clock is divided by 16 to generate the transmit clock, and is used for error detection during receive operations.

Along with the **UART Line Control, High Byte (UARTLCRH)** register (see page 484), the **UARTIBRD** and **UARTFBRD** registers form an internal 30-bit register. This internal register is only updated when a write operation to **UARTLCRH** is performed, so any changes to the baud-rate divisor must be followed by a write to the **UARTLCRH** register for the changes to take effect.

To update the baud-rate registers, there are four possible sequences:

- **UARTIBRD** write, **UARTFBRD** write, and **UARTLCRH** write
- **UARTFBRD** write, **UARTIBRD** write, and **UARTLCRH** write
- **UARTIBRD** write and **UARTLCRH** write
- **UARTFBRD** write and **UARTLCRH** write

12.3.3 Data Transmission

Data received or transmitted is stored in two 16-byte FIFOs, though the receive FIFO has an extra four bits per character for status information. For transmission, data is written into the transmit FIFO. If the UART is enabled, it causes a data frame to start transmitting with the parameters indicated in the **UARTLCRH** register. Data continues to be transmitted until there is no data left in the transmit FIFO. The BUSY bit in the **UART Flag (UARTFR)** register (see page 479) is asserted as soon as data is written to the transmit FIFO (that is, if the FIFO is non-empty) and remains asserted while data is being transmitted. The BUSY bit is negated only when the transmit FIFO is empty, and the last character has been transmitted from the shift register, including the stop bits. The UART can indicate that it is busy even though the UART may no longer be enabled.

When the receiver is idle (the UnRx is continuously 1) and the data input goes Low (a start bit has been received), the receive counter begins running and data is sampled on the eighth cycle of `Baud16` (described in “Transmit/Receive Logic” on page 468).

The start bit is valid and recognized if UnRx is still low on the eighth cycle of `Baud16`, otherwise it is ignored. After a valid start bit is detected, successive data bits are sampled on every 16th cycle of `Baud16` (that is, one bit period later) according to the programmed length of the data characters. The parity bit is then checked if parity mode was enabled. Data length and parity are defined in the **UARTLCRH** register.

Lastly, a valid stop bit is confirmed if UnRx is High, otherwise a framing error has occurred. When a full word is received, the data is stored in the receive FIFO, with any error bits associated with that word.

12.3.4 Serial IR (SIR)

The UART peripheral includes an IrDA serial-IR (SIR) encoder/decoder block. The IrDA SIR block provides functionality that converts between an asynchronous UART data stream, and half-duplex serial SIR interface. No analog processing is performed on-chip. The role of the SIR block is to provide a digital encoded output and decoded input to the UART. The UART signal pins can be connected to an infrared transceiver to implement an IrDA SIR physical layer link. The SIR block has two modes of operation:

- In normal IrDA mode, a zero logic level is transmitted as high pulse of 3/16th duration of the selected baud rate bit period on the output pin, while logic one levels are transmitted as a static LOW signal. These levels control the driver of an infrared transmitter, sending a pulse of light

for each zero. On the reception side, the incoming light pulses energize the photo transistor base of the receiver, pulling its output LOW. This drives the UART input pin LOW.

- In low-power IrDA mode, the width of the transmitted infrared pulse is set to three times the period of the internally generated IrLPBaud16 signal (1.63 µs, assuming a nominal 1.8432 MHz frequency) by changing the appropriate bit in the **UARTCR** register. See page 481 for more information on IrDA low-power pulse-duration configuration.

Figure 12-3 on page 470 shows the UART transmit and receive signals, with and without IrDA modulation.

Figure 12-3. IrDA Data Modulation

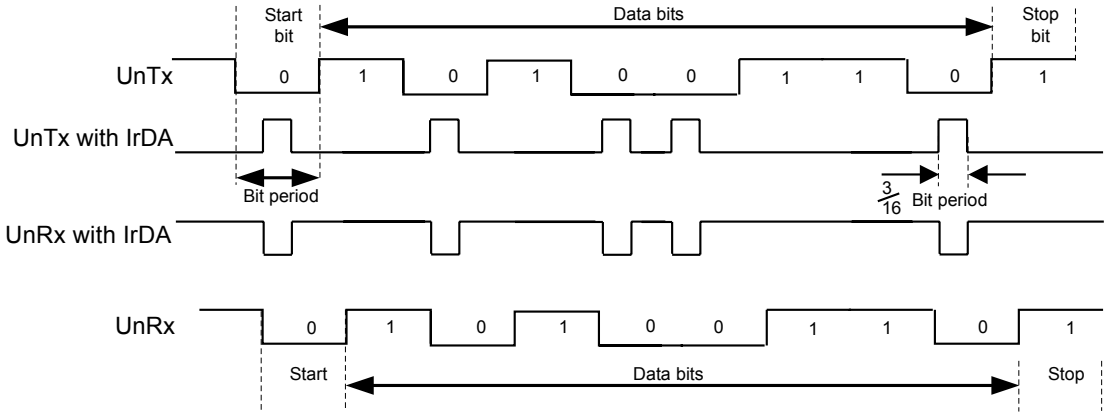

In both normal and low-power IrDA modes:

- During transmission, the UART data bit is used as the base for encoding
- During reception, the decoded bits are transferred to the UART receive logic

The IrDA SIR physical layer specifies a half-duplex communication link, with a minimum 10 ms delay between transmission and reception. This delay must be generated by software because it is not automatically supported by the UART. The delay is required because the infrared receiver electronics might become biased, or even saturated from the optical power coupled from the adjacent transmitter LED. This delay is known as latency, or receiver setup time.

If the application does not require the use of the UnRx signal, the GPIO pin that has the UnRx signal as an alternate function must be configured as the UnRx signal and pulled High.

12.3.5 FIFO Operation

The UART has two 16-entry FIFOs; one for transmit and one for receive. Both FIFOs are accessed via the **UART Data (UARTDR)** register (see page 475). Read operations of the **UARTDR** register return a 12-bit value consisting of 8 data bits and 4 error flags while write operations place 8-bit data in the transmit FIFO.

Out of reset, both FIFOs are disabled and act as 1-byte-deep holding registers. The FIFOs are enabled by setting the FEN bit in **UARTLCRH** (page 484).

FIFO status can be monitored via the **UART Flag (UARTFR)** register (see page 479) and the **UART Receive Status (UARTRSR)** register. Hardware monitors empty, full and overrun conditions. The

UARTFR register contains empty and full flags (TXFE, TXFF, RXFE, and RXFF bits) and the **UARTRSR** register shows overrun status via the OE bit.

The trigger points at which the FIFOs generate interrupts is controlled via the **UART Interrupt FIFO Level Select (UARTIFLS)** register (see page 488). Both FIFOs can be individually configured to trigger interrupts at different levels. Available configurations include 1/8, ¼, ½, ¾, and 7/8. For example, if the ¼ option is selected for the receive FIFO, the UART generates a receive interrupt after 4 data bytes are received. Out of reset, both FIFOs are configured to trigger an interrupt at the ½ mark.

12.3.6 Interrupts

The UART can generate interrupts when the following conditions are observed:

- Overrun Error
- Break Error
- Parity Error
- Framing Error
- Receive Timeout
- Transmit (when condition defined in the TXIFLSEL bit in the **UARTIFLS** register is met)
- Receive (when condition defined in the RXIFLSEL bit in the **UARTIFLS** register is met)

All of the interrupt events are ORed together before being sent to the interrupt controller, so the UART can only generate a single interrupt request to the controller at any given time. Software can service multiple interrupt events in a single interrupt service routine by reading the **UART Masked Interrupt Status (UARTMIS)** register (see page 493).

The interrupt events that can trigger a controller-level interrupt are defined in the **UART Interrupt Mask (UARTIM**) register (see page 490) by setting the corresponding IM bit to 1. If interrupts are not used, the raw interrupt status is always visible via the **UART Raw Interrupt Status (UARTRIS)** register (see page 492).

Interrupts are always cleared (for both the **UARTMIS** and **UARTRIS** registers) by setting the corresponding bit in the **UART Interrupt Clear (UARTICR)** register (see page 494).

The receive interrupt changes state when one of the following events occurs:

- If the FIFOs are enabled and the receive FIFO reaches the programmed trigger level, the RXRIS bit is set. The receive interrupt is cleared by reading data from the receive FIFO until it becomes less than the trigger level, or by clearing the interrupt by writing a 1 to the RXIC bit.
- If the FIFOs are disabled (have a depth of one location) and data is received thereby filling the location, the RXRIS bit is set. The receive interrupt is cleared by performing a single read of the receive FIFO, or by clearing the interrupt by writing a 1 to the RXIC bit.

The transmit interrupt changes state when one of the following events occurs:

- If the FIFOs are enabled and the transmit FIFO progresses through the programmed trigger level, the TXRIS bit is set. The transmit interrupt is based on a transition through level, therefore the FIFO must be written past the programmed trigger level otherwise no further transmit interrupts

will be generated. The transmit interrupt is cleared by writing data to the transmit FIFO until it becomes greater than the trigger level, or by clearing the interrupt by writing a 1 to the TXIC bit.

- If the FIFOs are disabled (have a depth of one location) and there is no data present in the transmitters single location, the TXRIS bit is set. It is cleared by performing a single write to the transmit FIFO, or by clearing the interrupt by writing a 1 to the TXIC bit.

12.3.7 Loopback Operation

The UART can be placed into an internal loopback mode for diagnostic or debug work. This is accomplished by setting the LBE bit in the **UARTCTL** register (see page 486). In loopback mode, data transmitted on UnTx is received on the UnRx input.

12.3.8 DMA Operation

The UART provides an interface connected to the µDMA controller. The DMA operation of the UART is enabled through the **UART DMA Control (UARTDMACTL)** register. When DMA operation is enabled, the UART will assert a DMA request on the receive or transmit channel when the associated FIFO can transfer data. For the receive channel, a single transfer request is asserted whenever there is any data in the receive FIFO. A burst transfer request is asserted whenever the amount of data in the receive FIFO is at or above the FIFO trigger level. For the transmit channel, a single transfer request is asserted whenever there is at least one empty location in the transmit FIFO. The burst request is asserted whenever the transmit FIFO contains fewer characters than the FIFO trigger level. The single and burst DMA transfer requests are handled automatically by the µDMA controller depending how the DMA channel is configured.

To enable DMA operation for the receive channel, the RXDMAE bit of the **DMA Control (UARTDMACTL)** register should be set. To enable DMA operation for the transmit channel, the TXDMAE bit of **UARTDMACTL** should be set. The UART can also be configured to stop using DMA for the receive channel if a receive error occurs. If the DMAERR bit of **UARTDMACR** is set, then when a receive error occurs, the DMA receive requests will be automatically disabled. This error condition can be cleared by clearing the UART error interrupt.

If DMA is enabled, then the µDMA controller will trigger an interrupt when a transfer is complete. The interrupt will occur on the UART interrupt vector. Therefore, if interrupts are used for UART operation and DMA is enabled, the UART interrupt handler must be designed to handle the µDMA completion interrupt.

See “Micro Direct Memory Access (µDMA)” on page 263 for more details about programming the µDMA controller.

12.3.9 IrDA SIR block

The IrDA SIR block contains an IrDA serial IR (SIR) protocol encoder/decoder. When enabled, the SIR block uses the UnTx and UnRx pins for the SIR protocol, which should be connected to an IR transceiver.

The SIR block can receive and transmit, but it is only half-duplex so it cannot do both at the same time. Transmission must be stopped before data can be received. The IrDA SIR physical layer specifies a minimum 10-ms delay between transmission and reception.

12.4 Initialization and Configuration

To use the UART, the peripheral clock must be enabled by setting the UART0 bit in the **RCGC1** register.

This section discusses the steps that are required to use a UART module. For this example, the UART clock is assumed to be 20 MHz and the desired UART configuration is:

- 115200 baud rate
- Data length of 8 bits
- One stop bit
- No parity
- FIFOs disabled
- No interrupts

The first thing to consider when programming the UART is the baud-rate divisor (BRD), since the **UARTIBRD** and **UARTFBRD** registers must be written before the **UARTLCRH** register. Using the equation described in "Baud-Rate Generation" on page 468, the BRD can be calculated:

```
BRD = 20,000,000 / (16 * 115,200) = 10.8507
```

which means that the `DIVINT` field of the **UARTIBRD** register (see page 482) should be set to 10. The value to be loaded into the **UARTFBRD** register (see page 483) is calculated by the equation:

```
UARTFBRD[DIVFRAC] = integer(0.8507 * 64 + 0.5) = 54
```

With the BRD values in hand, the UART configuration is written to the module in the following order:

1. Disable the UART by clearing the `UARTEN` bit in the **UARTCTL** register.
2. Write the integer portion of the BRD to the **UARTIBRD** register.
3. Write the fractional portion of the BRD to the **UARTFBRD** register.
4. Write the desired serial parameters to the **UARTLCRH** register (in this case, a value of 0x0000.0060).
5. Optionally, configure the uDMA channel (see "Micro Direct Memory Access (µDMA)" on page 263) and enable the DMA option(s) in the **UARTDMACTL** register.
6. Enable the UART by setting the `UARTEN` bit in the **UARTCTL** register.

12.5 Register Map

Table 12-2 on page 474 lists the UART registers. The offset listed is a hexadecimal increment to the register's address, relative to that UART's base address:

- UART0: 0x4000.C000

Note that the UART module clock must be enabled before the registers can be programmed (see page 218). There must be a delay of 3 system clocks after the UART module clock is enabled before any UART module registers are accessed.

Note: The UART must be disabled (see the `UARTEN` bit in the **UARTCTL** register on page 486) before any of the control registers are reprogrammed. When the UART is disabled during a TX or RX operation, the current transaction is completed prior to the UART stopping.

Table 12-2. UART Register Map

Offset	Name	Type	Reset	Description	See page
0x000	UARTDR	R/W	0x0000.0000	UART Data	475
0x004	UARTRSR/UARTECR	R/W	0x0000.0000	UART Receive Status/Error Clear	477
0x018	UARTFR	RO	0x0000.0090	UART Flag	479
0x020	UARTILPR	R/W	0x0000.0000	UART IrDA Low-Power Register	481
0x024	UARTIBRD	R/W	0x0000.0000	UART Integer Baud-Rate Divisor	482
0x028	UARTFBRD	R/W	0x0000.0000	UART Fractional Baud-Rate Divisor	483
0x02C	UARTLCRH	R/W	0x0000.0000	UART Line Control	484
0x030	UARTCTL	R/W	0x0000.0300	UART Control	486
0x034	UARTIFLS	R/W	0x0000.0012	UART Interrupt FIFO Level Select	488
0x038	UARTIM	R/W	0x0000.0000	UART Interrupt Mask	490
0x03C	UARTRIS	RO	0x0000.0000	UART Raw Interrupt Status	492
0x040	UARTMIS	RO	0x0000.0000	UART Masked Interrupt Status	493
0x044	UARTICR	W1C	0x0000.0000	UART Interrupt Clear	494
0x048	UARTDMACTL	R/W	0x0000.0000	UART DMA Control	496
0xFD0	UARTPeriphID4	RO	0x0000.0000	UART Peripheral Identification 4	497
0xFD4	UARTPeriphID5	RO	0x0000.0000	UART Peripheral Identification 5	498
0xFD8	UARTPeriphID6	RO	0x0000.0000	UART Peripheral Identification 6	499
0xFDC	UARTPeriphID7	RO	0x0000.0000	UART Peripheral Identification 7	500
0xFE0	UARTPeriphID0	RO	0x0000.0011	UART Peripheral Identification 0	501
0xFE4	UARTPeriphID1	RO	0x0000.0000	UART Peripheral Identification 1	502
0xFE8	UARTPeriphID2	RO	0x0000.0018	UART Peripheral Identification 2	503
0xFEC	UARTPeriphID3	RO	0x0000.0001	UART Peripheral Identification 3	504
0xFF0	UARTPCellID0	RO	0x0000.000D	UART PrimeCell Identification 0	505
0xFF4	UARTPCellID1	RO	0x0000.00F0	UART PrimeCell Identification 1	506
0xFF8	UARTPCellID2	RO	0x0000.0005	UART PrimeCell Identification 2	507
0xFFC	UARTPCellID3	RO	0x0000.00B1	UART PrimeCell Identification 3	508

12.6 Register Descriptions

The remainder of this section lists and describes the UART registers, in numerical order by address offset.

Register 1: UART Data (UARTDR), offset 0x000

Important: This register is read-sensitive. See the register description for details.

This register is the data register (the interface to the FIFOs).

When FIFOs are enabled, data written to this location is pushed onto the transmit FIFO. If FIFOs are disabled, data is stored in the transmitter holding register (the bottom word of the transmit FIFO). A write to this register initiates a transmission from the UART.

For received data, if the FIFO is enabled, the data byte and the 4-bit status (break, frame, parity, and overrun) is pushed onto the 12-bit wide receive FIFO. If FIFOs are disabled, the data byte and status are stored in the receiving holding register (the bottom word of the receive FIFO). The received data can be retrieved by reading this register.

UART Data (UARTDR)

UART0 base: 0x4000.C000
Offset 0x000
Type R/W, reset 0x0000.0000

	31	30	29	28	27	26	25	24	23	22	21	20	19	18	17	16
	reserved															
Type	RO	RO	RO	RO	RO	RO	RO	RO	RO	RO	RO	RO	RO	RO	RO	RO
Reset	0	0	0	0	0	0	0	0	0	0	0	0	0	0	0	0

	15	14	13	12	11	10	9	8	7	6	5	4	3	2	1	0
	reserved				OE	BE	PE	FE	DATA							
Type	RO	RO	RO	RO	RO	RO	RO	RO	R/W	R/W	R/W	R/W	R/W	R/W	R/W	R/W
Reset	0	0	0	0	0	0	0	0	0	0	0	0	0	0	0	0

Bit/Field	Name	Type	Reset	Description
31:12	reserved	RO	0	Software should not rely on the value of a reserved bit. To provide compatibility with future products, the value of a reserved bit should be preserved across a read-modify-write operation.
11	OE	RO	0	UART Overrun Error The OE values are defined as follows: Value Description 0 There has been no data loss due to a FIFO overrun. 1 New data was received when the FIFO was full, resulting in data loss.
10	BE	RO	0	UART Break Error This bit is set to 1 when a break condition is detected, indicating that the receive data input was held Low for longer than a full-word transmission time (defined as start, data, parity, and stop bits). In FIFO mode, this error is associated with the character at the top of the FIFO. When a break occurs, only one 0 character is loaded into the FIFO. The next character is only enabled after the received data input goes to a 1 (marking state) and the next valid start bit is received.

Bit/Field	Name	Type	Reset	Description
9	PE	RO	0	UART Parity Error This bit is set to 1 when the parity of the received data character does not match the parity defined by bits 2 and 7 of the **UARTLCRH** register. In FIFO mode, this error is associated with the character at the top of the FIFO.
8	FE	RO	0	UART Framing Error This bit is set to 1 when the received character does not have a valid stop bit (a valid stop bit is 1).
7:0	DATA	R/W	0	Data Transmitted or Received When written, the data that is to be transmitted via the UART. When read, the data that was received by the UART.

Register 2: UART Receive Status/Error Clear (UARTRSR/UARTECR), offset 0x004

The **UARTRSR/UARTECR** register is the receive status register/error clear register.

In addition to the **UARTDR** register, receive status can also be read from the **UARTRSR** register. If the status is read from this register, then the status information corresponds to the entry read from **UARTDR** prior to reading **UARTRSR**. The status information for overrun is set immediately when an overrun condition occurs.

The **UARTRSR** register cannot be written.

A write of any value to the **UARTECR** register clears the framing, parity, break, and overrun errors. All the bits are cleared to 0 on reset.

Reads

UART Receive Status/Error Clear (UARTRSR/UARTECR)

UART0 base: 0x4000.C000
Offset 0x004
Type RO, reset 0x0000.0000

	31	30	29	28	27	26	25	24	23	22	21	20	19	18	17	16
	reserved															
Type	RO	RO	RO	RO	RO	RO	RO	RO	RO	RO	RO	RO	RO	RO	RO	RO
Reset	0	0	0	0	0	0	0	0	0	0	0	0	0	0	0	0

	15	14	13	12	11	10	9	8	7	6	5	4	3	2	1	0
	reserved												OE	BE	PE	FE
Type	RO	RO	RO	RO	RO	RO	RO	RO	RO	RO	RO	RO	RO	RO	RO	RO
Reset	0	0	0	0	0	0	0	0	0	0	0	0	0	0	0	0

Bit/Field	Name	Type	Reset	Description
31:4	reserved	RO	0	Software should not rely on the value of a reserved bit. To provide compatibility with future products, the value of a reserved bit should be preserved across a read-modify-write operation.
3	OE	RO	0	UART Overrun Error When this bit is set to 1, data is received and the FIFO is already full. This bit is cleared to 0 by a write to **UARTECR**. The FIFO contents remain valid since no further data is written when the FIFO is full, only the contents of the shift register are overwritten. The CPU must now read the data in order to empty the FIFO.
2	BE	RO	0	UART Break Error This bit is set to 1 when a break condition is detected, indicating that the received data input was held Low for longer than a full-word transmission time (defined as start, data, parity, and stop bits). This bit is cleared to 0 by a write to **UARTECR**. In FIFO mode, this error is associated with the character at the top of the FIFO. When a break occurs, only one 0 character is loaded into the FIFO. The next character is only enabled after the receive data input goes to a 1 (marking state) and the next valid start bit is received.

Bit/Field	Name	Type	Reset	Description
1	PE	RO	0	UART Parity Error This bit is set to 1 when the parity of the received data character does not match the parity defined by bits 2 and 7 of the **UARTLCRH** register. This bit is cleared to 0 by a write to **UARTECR**.
0	FE	RO	0	UART Framing Error This bit is set to 1 when the received character does not have a valid stop bit (a valid stop bit is 1). This bit is cleared to 0 by a write to **UARTECR**. In FIFO mode, this error is associated with the character at the top of the FIFO.

Writes

UART Receive Status/Error Clear (UARTRSR/UARTECR)

UART0 base: 0x4000.C000
Offset 0x004
Type WO, reset 0x0000.0000

	31	30	29	28	27	26	25	24	23	22	21	20	19	18	17	16
	reserved															
Type	WO	WO	WO	WO	WO	WO	WO	WO	WO	WO	WO	WO	WO	WO	WO	WO
Reset	0	0	0	0	0	0	0	0	0	0	0	0	0	0	0	0

	15	14	13	12	11	10	9	8	7	6	5	4	3	2	1	0
	reserved								DATA							
Type	WO	WO	WO	WO	WO	WO	WO	WO	WO	WO	WO	WO	WO	WO	WO	WO
Reset	0	0	0	0	0	0	0	0	0	0	0	0	0	0	0	0

Bit/Field	Name	Type	Reset	Description
31:8	reserved	WO	0	Software should not rely on the value of a reserved bit. To provide compatibility with future products, the value of a reserved bit should be preserved across a read-modify-write operation.
7:0	DATA	WO	0	Error Clear A write to this register of any data clears the framing, parity, break, and overrun flags.

Register 3: UART Flag (UARTFR), offset 0x018

The **UARTFR** register is the flag register. After reset, the TXFF, RXFF, and BUSY bits are 0, and TXFE and RXFE bits are 1.

UART Flag (UARTFR)

UART0 base: 0x4000.C000
Offset 0x018
Type RO, reset 0x0000.0090

	31	30	29	28	27	26	25	24	23	22	21	20	19	18	17	16
	reserved															
Type	RO	RO	RO	RO	RO	RO	RO	RO	RO	RO	RO	RO	RO	RO	RO	RO
Reset	0	0	0	0	0	0	0	0	0	0	0	0	0	0	0	0

	15	14	13	12	11	10	9	8	7	6	5	4	3	2	1	0
	reserved								TXFE	RXFF	TXFF	RXFE	BUSY	reserved		
Type	RO	RO	RO	RO	RO	RO	RO	RO	RO	RO	RO	RO	RO	RO	RO	RO
Reset	0	0	0	0	0	0	0	0	1	0	0	1	0	0	0	0

Bit/Field	Name	Type	Reset	Description
31:8	reserved	RO	0	Software should not rely on the value of a reserved bit. To provide compatibility with future products, the value of a reserved bit should be preserved across a read-modify-write operation.
7	TXFE	RO	1	UART Transmit FIFO Empty The meaning of this bit depends on the state of the FEN bit in the **UARTLCRH** register. If the FIFO is disabled (FEN is 0), this bit is set when the transmit holding register is empty. If the FIFO is enabled (FEN is 1), this bit is set when the transmit FIFO is empty.
6	RXFF	RO	0	UART Receive FIFO Full The meaning of this bit depends on the state of the FEN bit in the **UARTLCRH** register. If the FIFO is disabled, this bit is set when the receive holding register is full. If the FIFO is enabled, this bit is set when the receive FIFO is full.
5	TXFF	RO	0	UART Transmit FIFO Full The meaning of this bit depends on the state of the FEN bit in the **UARTLCRH** register. If the FIFO is disabled, this bit is set when the transmit holding register is full. If the FIFO is enabled, this bit is set when the transmit FIFO is full.
4	RXFE	RO	1	UART Receive FIFO Empty The meaning of this bit depends on the state of the FEN bit in the **UARTLCRH** register. If the FIFO is disabled, this bit is set when the receive holding register is empty. If the FIFO is enabled, this bit is set when the receive FIFO is empty.

Bit/Field	Name	Type	Reset	Description
3	BUSY	RO	0	UART Busy When this bit is 1, the UART is busy transmitting data. This bit remains set until the complete byte, including all stop bits, has been sent from the shift register. This bit is set as soon as the transmit FIFO becomes non-empty (regardless of whether UART is enabled).
2:0	reserved	RO	0	Software should not rely on the value of a reserved bit. To provide compatibility with future products, the value of a reserved bit should be preserved across a read-modify-write operation.

Register 4: UART IrDA Low-Power Register (UARTILPR), offset 0x020

The **UARTILPR** register is an 8-bit read/write register that stores the low-power counter divisor value used to derive the low-power SIR pulse width clock by dividing down the system clock (SysClk). All the bits are cleared to 0 when reset.

The internal `IrLPBaud16` clock is generated by dividing down SysClk according to the low-power divisor value written to **UARTILPR**. The duration of SIR pulses generated when low-power mode is enabled is three times the period of the `IrLPBaud16` clock. The low-power divisor value is calculated as follows:

$$\texttt{ILPDVSR = SysClk / } F_{\texttt{IrLPBaud16}}$$

where $F_{\texttt{IrLPBaud16}}$ is nominally 1.8432 MHz.

You must choose the divisor so that 1.42 MHz < $F_{\texttt{IrLPBaud16}}$ < 2.12 MHz, which results in a low-power pulse duration of 1.41–2.11 µs (three times the period of `IrLPBaud16`). The minimum frequency of `IrLPBaud16` ensures that pulses less than one period of `IrLPBaud16` are rejected, but that pulses greater than 1.4 µs are accepted as valid pulses.

Note: Zero is an illegal value. Programming a zero value results in no `IrLPBaud16` pulses being generated.

UART IrDA Low-Power Register (UARTILPR)

UART0 base: 0x4000.C000
Offset 0x020
Type R/W, reset 0x0000.0000

	31	30	29	28	27	26	25	24	23	22	21	20	19	18	17	16
	reserved															
Type	RO	RO	RO	RO	RO	RO	RO	RO	RO	RO	RO	RO	RO	RO	RO	RO
Reset	0	0	0	0	0	0	0	0	0	0	0	0	0	0	0	0

	15	14	13	12	11	10	9	8	7	6	5	4	3	2	1	0
	reserved								ILPDVSR							
Type	RO	RO	RO	RO	RO	RO	RO	RO	R/W	R/W	R/W	R/W	R/W	R/W	R/W	R/W
Reset	0	0	0	0	0	0	0	0	0	0	0	0	0	0	0	0

Bit/Field	Name	Type	Reset	Description
31:8	reserved	RO	0	Software should not rely on the value of a reserved bit. To provide compatibility with future products, the value of a reserved bit should be preserved across a read-modify-write operation.
7:0	ILPDVSR	R/W	0x00	IrDA Low-Power Divisor This is an 8-bit low-power divisor value.

Register 5: UART Integer Baud-Rate Divisor (UARTIBRD), offset 0x024

The **UARTIBRD** register is the integer part of the baud-rate divisor value. All the bits are cleared on reset. The minimum possible divide ratio is 1 (when **UARTIBRD**=0), in which case the **UARTFBRD** register is ignored. When changing the **UARTIBRD** register, the new value does not take effect until transmission/reception of the current character is complete. Any changes to the baud-rate divisor must be followed by a write to the **UARTLCRH** register. See “Baud-Rate Generation” on page 468 for configuration details.

UART Integer Baud-Rate Divisor (UARTIBRD)

UART0 base: 0x4000.C000
Offset 0x024
Type R/W, reset 0x0000.0000

	31	30	29	28	27	26	25	24	23	22	21	20	19	18	17	16
	reserved															
Type	RO	RO	RO	RO	RO	RO	RO	RO	RO	RO	RO	RO	RO	RO	RO	RO
Reset	0	0	0	0	0	0	0	0	0	0	0	0	0	0	0	0

	15	14	13	12	11	10	9	8	7	6	5	4	3	2	1	0
	DIVINT															
Type	R/W	R/W	R/W	R/W	R/W	R/W	R/W	R/W	R/W	R/W	R/W	R/W	R/W	R/W	R/W	R/W
Reset	0	0	0	0	0	0	0	0	0	0	0	0	0	0	0	0

Bit/Field	Name	Type	Reset	Description
31:16	reserved	RO	0	Software should not rely on the value of a reserved bit. To provide compatibility with future products, the value of a reserved bit should be preserved across a read-modify-write operation.
15:0	DIVINT	R/W	0x0000	Integer Baud-Rate Divisor

Register 6: UART Fractional Baud-Rate Divisor (UARTFBRD), offset 0x028

The **UARTFBRD** register is the fractional part of the baud-rate divisor value. All the bits are cleared on reset. When changing the **UARTFBRD** register, the new value does not take effect until transmission/reception of the current character is complete. Any changes to the baud-rate divisor must be followed by a write to the **UARTLCRH** register. See “Baud-Rate Generation” on page 468 for configuration details.

UART Fractional Baud-Rate Divisor (UARTFBRD)

UART0 base: 0x4000.C000
Offset 0x028
Type R/W, reset 0x0000.0000

	31	30	29	28	27	26	25	24	23	22	21	20	19	18	17	16
	reserved															
Type	RO	RO	RO	RO	RO	RO	RO	RO	RO	RO	RO	RO	RO	RO	RO	RO
Reset	0	0	0	0	0	0	0	0	0	0	0	0	0	0	0	0

	15	14	13	12	11	10	9	8	7	6	5	4	3	2	1	0
	reserved										DIVFRAC					
Type	RO	RO	RO	RO	RO	RO	RO	RO	RO	RO	R/W	R/W	R/W	R/W	R/W	R/W
Reset	0	0	0	0	0	0	0	0	0	0	0	0	0	0	0	0

Bit/Field	Name	Type	Reset	Description
31:6	reserved	RO	0x00	Software should not rely on the value of a reserved bit. To provide compatibility with future products, the value of a reserved bit should be preserved across a read-modify-write operation.
5:0	DIVFRAC	R/W	0x000	Fractional Baud-Rate Divisor

Register 7: UART Line Control (UARTLCRH), offset 0x02C

The **UARTLCRH** register is the line control register. Serial parameters such as data length, parity, and stop bit selection are implemented in this register.

When updating the baud-rate divisor (**UARTIBRD** and/or **UARTIFRD**), the **UARTLCRH** register must also be written. The write strobe for the baud-rate divisor registers is tied to the **UARTLCRH** register.

UART Line Control (UARTLCRH)

UART0 base: 0x4000.C000
Offset 0x02C
Type R/W, reset 0x0000.0000

	31	30	29	28	27	26	25	24	23	22	21	20	19	18	17	16
	reserved															
Type	RO	RO	RO	RO	RO	RO	RO	RO	RO	RO	RO	RO	RO	RO	RO	RO
Reset	0	0	0	0	0	0	0	0	0	0	0	0	0	0	0	0

	15	14	13	12	11	10	9	8	7	6	5	4	3	2	1	0
	reserved								SPS	WLEN		FEN	STP2	EPS	PEN	BRK
Type	RO	RO	RO	RO	RO	RO	RO	RO	R/W	R/W	R/W	R/W	R/W	R/W	R/W	R/W
Reset	0	0	0	0	0	0	0	0	0	0	0	0	0	0	0	0

Bit/Field	Name	Type	Reset	Description
31:8	reserved	RO	0	Software should not rely on the value of a reserved bit. To provide compatibility with future products, the value of a reserved bit should be preserved across a read-modify-write operation.
7	SPS	R/W	0	UART Stick Parity Select When bits 1, 2, and 7 of **UARTLCRH** are set, the parity bit is transmitted and checked as a 0. When bits 1 and 7 are set and 2 is cleared, the parity bit is transmitted and checked as a 1. When this bit is cleared, stick parity is disabled.
6:5	WLEN	R/W	0	UART Word Length The bits indicate the number of data bits transmitted or received in a frame as follows: Value Description 0x3 8 bits 0x2 7 bits 0x1 6 bits 0x0 5 bits (default)
4	FEN	R/W	0	UART Enable FIFOs If this bit is set to 1, transmit and receive FIFO buffers are enabled (FIFO mode). When cleared to 0, FIFOs are disabled (Character mode). The FIFOs become 1-byte-deep holding registers.
3	STP2	R/W	0	UART Two Stop Bits Select If this bit is set to 1, two stop bits are transmitted at the end of a frame. The receive logic does not check for two stop bits being received.

Bit/Field	Name	Type	Reset	Description
2	EPS	R/W	0	UART Even Parity Select If this bit is set to 1, even parity generation and checking is performed during transmission and reception, which checks for an even number of 1s in data and parity bits. When cleared to 0, then odd parity is performed, which checks for an odd number of 1s. This bit has no effect when parity is disabled by the PEN bit.
1	PEN	R/W	0	UART Parity Enable If this bit is set to 1, parity checking and generation is enabled; otherwise, parity is disabled and no parity bit is added to the data frame.
0	BRK	R/W	0	UART Send Break If this bit is set to 1, a Low level is continually output on the UnTX output, after completing transmission of the current character. For the proper execution of the break command, the software must set this bit for at least two frames (character periods). For normal use, this bit must be cleared to 0.

Register 8: UART Control (UARTCTL), offset 0x030

The **UARTCTL** register is the control register. All the bits are cleared on reset except for the `Transmit Enable (TXE)` and `Receive Enable (RXE)` bits, which are set to 1.

To enable the UART module, the `UARTEN` bit must be set to 1. If software requires a configuration change in the module, the `UARTEN` bit must be cleared before the configuration changes are written. If the UART is disabled during a transmit or receive operation, the current transaction is completed prior to the UART stopping.

Note: The **UARTCTL** register should not be changed while the UART is enabled or else the results are unpredictable. The following sequence is recommended for making changes to the **UARTCTL** register.

1. Disable the UART.
2. Wait for the end of transmission or reception of the current character.
3. Flush the transmit FIFO by disabling bit 4 (`FEN`) in the line control register (**UARTLCRH**).
4. Reprogram the control register.
5. Enable the UART.

UART Control (UARTCTL)

UART0 base: 0x4000.C000
Offset 0x030
Type R/W, reset 0x0000.0300

	31	30	29	28	27	26	25	24	23	22	21	20	19	18	17	16
	reserved															
Type	RO	RO	RO	RO	RO	RO	RO	RO	RO	RO	RO	RO	RO	RO	RO	RO
Reset	0	0	0	0	0	0	0	0	0	0	0	0	0	0	0	0

	15	14	13	12	11	10	9	8	7	6	5	4	3	2	1	0
	reserved						RXE	TXE	LBE	reserved				SIRLP	SIREN	UARTEN
Type	RO	RO	RO	RO	RO	RO	R/W	R/W	R/W	RO	RO	RO	RO	R/W	R/W	R/W
Reset	0	0	0	0	0	0	1	1	0	0	0	0	0	0	0	0

Bit/Field	Name	Type	Reset	Description
31:10	reserved	RO	0	Software should not rely on the value of a reserved bit. To provide compatibility with future products, the value of a reserved bit should be preserved across a read-modify-write operation.
9	RXE	R/W	1	UART Receive Enable If this bit is set to 1, the receive section of the UART is enabled. When the UART is disabled in the middle of a receive, it completes the current character before stopping. **Note:** To enable reception, the `UARTEN` bit must also be set.
8	TXE	R/W	1	UART Transmit Enable If this bit is set to 1, the transmit section of the UART is enabled. When the UART is disabled in the middle of a transmission, it completes the current character before stopping. **Note:** To enable transmission, the `UARTEN` bit must also be set.

Bit/Field	Name	Type	Reset	Description
7	LBE	R/W	0	UART Loop Back Enable If this bit is set to 1, the `UnTX` path is fed through the `UnRX` path.
6:3	reserved	RO	0	Software should not rely on the value of a reserved bit. To provide compatibility with future products, the value of a reserved bit should be preserved across a read-modify-write operation.
2	SIRLP	R/W	0	UART SIR Low Power Mode This bit selects the IrDA encoding mode. If this bit is cleared to 0, low-level bits are transmitted as an active High pulse with a width of 3/16th of the bit period. If this bit is set to 1, low-level bits are transmitted with a pulse width which is 3 times the period of the `IrLPBaud16` input signal, regardless of the selected bit rate. Setting this bit uses less power, but might reduce transmission distances. See page 481 for more information.
1	SIREN	R/W	0	UART SIR Enable If this bit is set to 1, the IrDA SIR block is enabled, and the UART will transmit and receive data using SIR protocol.
0	UARTEN	R/W	0	UART Enable If this bit is set to 1, the UART is enabled. When the UART is disabled in the middle of transmission or reception, it completes the current character before stopping.

Register 9: UART Interrupt FIFO Level Select (UARTIFLS), offset 0x034

The **UARTIFLS** register is the interrupt FIFO level select register. You can use this register to define the FIFO level at which the `TXRIS` and `RXRIS` bits in the **UARTRIS** register are triggered.

The interrupts are generated based on a transition through a level rather than being based on the level. That is, the interrupts are generated when the fill level progresses through the trigger level. For example, if the receive trigger level is set to the half-way mark, the interrupt is triggered as the module is receiving the 9th character.

Out of reset, the `TXIFLSEL` and `RXIFLSEL` bits are configured so that the FIFOs trigger an interrupt at the half-way mark.

UART Interrupt FIFO Level Select (UARTIFLS)

UART0 base: 0x4000.C000
Offset 0x034
Type R/W, reset 0x0000.0012

	31	30	29	28	27	26	25	24	23	22	21	20	19	18	17	16
	reserved															
Type	RO	RO	RO	RO	RO	RO	RO	RO	RO	RO	RO	RO	RO	RO	RO	RO
Reset	0	0	0	0	0	0	0	0	0	0	0	0	0	0	0	0

	15	14	13	12	11	10	9	8	7	6	5	4	3	2	1	0
	reserved										RXIFLSEL			TXIFLSEL		
Type	RO	RO	RO	RO	RO	RO	RO	RO	RO	RO	R/W	R/W	R/W	R/W	R/W	R/W
Reset	0	0	0	0	0	0	0	0	0	0	0	1	0	0	1	0

Bit/Field	Name	Type	Reset	Description
31:6	reserved	RO	0x00	Software should not rely on the value of a reserved bit. To provide compatibility with future products, the value of a reserved bit should be preserved across a read-modify-write operation.
5:3	RXIFLSEL	R/W	0x2	UART Receive Interrupt FIFO Level Select The trigger points for the receive interrupt are as follows: Value — Description 0x0 — RX FIFO ≥ ⅛ full 0x1 — RX FIFO ≥ ¼ full 0x2 — RX FIFO ≥ ½ full (default) 0x3 — RX FIFO ≥ ¾ full 0x4 — RX FIFO ≥ ⅞ full 0x5-0x7 — Reserved

Bit/Field	Name	Type	Reset	Description
2:0	TXIFLSEL	R/W	0x2	UART Transmit Interrupt FIFO Level Select The trigger points for the transmit interrupt are as follows: Value — Description 0x0 — TX FIFO ≤ ⅞ empty 0x1 — TX FIFO ≤ ¾ empty 0x2 — TX FIFO ≤ ½ empty (default) 0x3 — TX FIFO ≤ ¼ empty 0x4 — TX FIFO ≤ ⅛ empty 0x5-0x7 — Reserved

Register 10: UART Interrupt Mask (UARTIM), offset 0x038

The **UARTIM** register is the interrupt mask set/clear register.

On a read, this register gives the current value of the mask on the relevant interrupt. Writing a 1 to a bit allows the corresponding raw interrupt signal to be routed to the interrupt controller. Writing a 0 prevents the raw interrupt signal from being sent to the interrupt controller.

UART Interrupt Mask (UARTIM)

UART0 base: 0x4000.C000
Offset 0x038
Type R/W, reset 0x0000.0000

	31	30	29	28	27	26	25	24	23	22	21	20	19	18	17	16
	reserved															
Type	RO	RO	RO	RO	RO	RO	RO	RO	RO	RO	RO	RO	RO	RO	RO	RO
Reset	0	0	0	0	0	0	0	0	0	0	0	0	0	0	0	0

	15	14	13	12	11	10	9	8	7	6	5	4	3	2	1	0
	reserved					OEIM	BEIM	PEIM	FEIM	RTIM	TXIM	RXIM	reserved			
Type	RO	RO	RO	RO	RO	R/W	R/W	R/W	R/W	R/W	R/W	R/W	RO	RO	RO	RO
Reset	0	0	0	0	0	0	0	0	0	0	0	0	0	0	0	0

Bit/Field	Name	Type	Reset	Description
31:11	reserved	RO	0x00	Software should not rely on the value of a reserved bit. To provide compatibility with future products, the value of a reserved bit should be preserved across a read-modify-write operation.
10	OEIM	R/W	0	UART Overrun Error Interrupt Mask On a read, the current mask for the `OEIM` interrupt is returned. Setting this bit to 1 promotes the `OEIM` interrupt to the interrupt controller.
9	BEIM	R/W	0	UART Break Error Interrupt Mask On a read, the current mask for the `BEIM` interrupt is returned. Setting this bit to 1 promotes the `BEIM` interrupt to the interrupt controller.
8	PEIM	R/W	0	UART Parity Error Interrupt Mask On a read, the current mask for the `PEIM` interrupt is returned. Setting this bit to 1 promotes the `PEIM` interrupt to the interrupt controller.
7	FEIM	R/W	0	UART Framing Error Interrupt Mask On a read, the current mask for the `FEIM` interrupt is returned. Setting this bit to 1 promotes the `FEIM` interrupt to the interrupt controller.
6	RTIM	R/W	0	UART Receive Time-Out Interrupt Mask On a read, the current mask for the `RTIM` interrupt is returned. Setting this bit to 1 promotes the `RTIM` interrupt to the interrupt controller.
5	TXIM	R/W	0	UART Transmit Interrupt Mask On a read, the current mask for the `TXIM` interrupt is returned. Setting this bit to 1 promotes the `TXIM` interrupt to the interrupt controller.
4	RXIM	R/W	0	UART Receive Interrupt Mask On a read, the current mask for the `RXIM` interrupt is returned. Setting this bit to 1 promotes the `RXIM` interrupt to the interrupt controller.

Bit/Field	Name	Type	Reset	Description
3:0	reserved	RO	0x00	Software should not rely on the value of a reserved bit. To provide compatibility with future products, the value of a reserved bit should be preserved across a read-modify-write operation.

Register 11: UART Raw Interrupt Status (UARTRIS), offset 0x03C

The **UARTRIS** register is the raw interrupt status register. On a read, this register gives the current raw status value of the corresponding interrupt. A write has no effect.

UART Raw Interrupt Status (UARTRIS)

UART0 base: 0x4000.C000
Offset 0x03C
Type RO, reset 0x0000.0000

	31	30	29	28	27	26	25	24	23	22	21	20	19	18	17	16
	reserved															
Type	RO	RO	RO	RO	RO	RO	RO	RO	RO	RO	RO	RO	RO	RO	RO	RO
Reset	0	0	0	0	0	0	0	0	0	0	0	0	0	0	0	0

	15	14	13	12	11	10	9	8	7	6	5	4	3	2	1	0
	reserved					OERIS	BERIS	PERIS	FERIS	RTRIS	TXRIS	RXRIS	reserved			
Type	RO	RO	RO	RO	RO	RO	RO	RO	RO	RO	RO	RO	RO	RO	RO	RO
Reset	0	0	0	0	0	0	0	0	0	0	0	0	0	0	0	0

Bit/Field	Name	Type	Reset	Description
31:11	reserved	RO	0x00	Software should not rely on the value of a reserved bit. To provide compatibility with future products, the value of a reserved bit should be preserved across a read-modify-write operation.
10	OERIS	RO	0	UART Overrun Error Raw Interrupt Status Gives the raw interrupt state (prior to masking) of this interrupt.
9	BERIS	RO	0	UART Break Error Raw Interrupt Status Gives the raw interrupt state (prior to masking) of this interrupt.
8	PERIS	RO	0	UART Parity Error Raw Interrupt Status Gives the raw interrupt state (prior to masking) of this interrupt.
7	FERIS	RO	0	UART Framing Error Raw Interrupt Status Gives the raw interrupt state (prior to masking) of this interrupt.
6	RTRIS	RO	0	UART Receive Time-Out Raw Interrupt Status Gives the raw interrupt state (prior to masking) of this interrupt.
5	TXRIS	RO	0	UART Transmit Raw Interrupt Status Gives the raw interrupt state (prior to masking) of this interrupt.
4	RXRIS	RO	0	UART Receive Raw Interrupt Status Gives the raw interrupt state (prior to masking) of this interrupt.
3:0	reserved	RO	0x0	Software should not rely on the value of a reserved bit. To provide compatibility with future products, the value of a reserved bit should be preserved across a read-modify-write operation.

Register 12: UART Masked Interrupt Status (UARTMIS), offset 0x040

The **UARTMIS** register is the masked interrupt status register. On a read, this register gives the current masked status value of the corresponding interrupt. A write has no effect.

UART Masked Interrupt Status (UARTMIS)

UART0 base: 0x4000.C000
Offset 0x040
Type RO, reset 0x0000.0000

	31	30	29	28	27	26	25	24	23	22	21	20	19	18	17	16
	reserved															
Type	RO	RO	RO	RO	RO	RO	RO	RO	RO	RO	RO	RO	RO	RO	RO	RO
Reset	0	0	0	0	0	0	0	0	0	0	0	0	0	0	0	0

	15	14	13	12	11	10	9	8	7	6	5	4	3	2	1	0
	reserved					OEMIS	BEMIS	PEMIS	FEMIS	RTMIS	TXMIS	RXMIS	reserved			
Type	RO	RO	RO	RO	RO	RO	RO	RO	RO	RO	RO	RO	RO	RO	RO	RO
Reset	0	0	0	0	0	0	0	0	0	0	0	0	0	0	0	0

Bit/Field	Name	Type	Reset	Description
31:11	reserved	RO	0x00	Software should not rely on the value of a reserved bit. To provide compatibility with future products, the value of a reserved bit should be preserved across a read-modify-write operation.
10	OEMIS	RO	0	UART Overrun Error Masked Interrupt Status Gives the masked interrupt state of this interrupt.
9	BEMIS	RO	0	UART Break Error Masked Interrupt Status Gives the masked interrupt state of this interrupt.
8	PEMIS	RO	0	UART Parity Error Masked Interrupt Status Gives the masked interrupt state of this interrupt.
7	FEMIS	RO	0	UART Framing Error Masked Interrupt Status Gives the masked interrupt state of this interrupt.
6	RTMIS	RO	0	UART Receive Time-Out Masked Interrupt Status Gives the masked interrupt state of this interrupt.
5	TXMIS	RO	0	UART Transmit Masked Interrupt Status Gives the masked interrupt state of this interrupt.
4	RXMIS	RO	0	UART Receive Masked Interrupt Status Gives the masked interrupt state of this interrupt.
3:0	reserved	RO	0	Software should not rely on the value of a reserved bit. To provide compatibility with future products, the value of a reserved bit should be preserved across a read-modify-write operation.

Register 13: UART Interrupt Clear (UARTICR), offset 0x044

The **UARTICR** register is the interrupt clear register. On a write of 1, the corresponding interrupt (both raw interrupt and masked interrupt, if enabled) is cleared. A write of 0 has no effect.

UART Interrupt Clear (UARTICR)

UART0 base: 0x4000.C000
Offset 0x044
Type W1C, reset 0x0000.0000

	31	30	29	28	27	26	25	24	23	22	21	20	19	18	17	16
	reserved															
Type	RO	RO	RO	RO	RO	RO	RO	RO	RO	RO	RO	RO	RO	RO	RO	RO
Reset	0	0	0	0	0	0	0	0	0	0	0	0	0	0	0	0

	15	14	13	12	11	10	9	8	7	6	5	4	3	2	1	0
	reserved					OEIC	BEIC	PEIC	FEIC	RTIC	TXIC	RXIC	reserved			
Type	RO	RO	RO	RO	RO	W1C	W1C	W1C	W1C	W1C	W1C	W1C	RO	RO	RO	RO
Reset	0	0	0	0	0	0	0	0	0	0	0	0	0	0	0	0

Bit/Field	Name	Type	Reset	Description
31:11	reserved	RO	0x00	Software should not rely on the value of a reserved bit. To provide compatibility with future products, the value of a reserved bit should be preserved across a read-modify-write operation.
10	OEIC	W1C	0	Overrun Error Interrupt Clear The `OEIC` values are defined as follows: Value Description 0 No effect on the interrupt. 1 Clears interrupt.
9	BEIC	W1C	0	Break Error Interrupt Clear The `BEIC` values are defined as follows: Value Description 0 No effect on the interrupt. 1 Clears interrupt.
8	PEIC	W1C	0	Parity Error Interrupt Clear The `PEIC` values are defined as follows: Value Description 0 No effect on the interrupt. 1 Clears interrupt.
7	FEIC	W1C	0	Framing Error Interrupt Clear The `FEIC` values are defined as follows: Value Description 0 No effect on the interrupt. 1 Clears interrupt.

Bit/Field	Name	Type	Reset	Description
6	RTIC	W1C	0	Receive Time-Out Interrupt Clear The `RTIC` values are defined as follows: Value Description 0 No effect on the interrupt. 1 Clears interrupt.
5	TXIC	W1C	0	Transmit Interrupt Clear The `TXIC` values are defined as follows: Value Description 0 No effect on the interrupt. 1 Clears interrupt.
4	RXIC	W1C	0	Receive Interrupt Clear The `RXIC` values are defined as follows: Value Description 0 No effect on the interrupt. 1 Clears interrupt.
3:0	reserved	RO	0x00	Software should not rely on the value of a reserved bit. To provide compatibility with future products, the value of a reserved bit should be preserved across a read-modify-write operation.

Register 14: UART DMA Control (UARTDMACTL), offset 0x048

The **UARTDMACTL** register is the DMA control register.

UART DMA Control (UARTDMACTL)

UART0 base: 0x4000.C000
Offset 0x048
Type R/W, reset 0x0000.0000

	31	30	29	28	27	26	25	24	23	22	21	20	19	18	17	16
	reserved															
Type	RO	RO	RO	RO	RO	RO	RO	RO	RO	RO	RO	RO	RO	RO	RO	RO
Reset	0	0	0	0	0	0	0	0	0	0	0	0	0	0	0	0

	15	14	13	12	11	10	9	8	7	6	5	4	3	2	1	0
	reserved													DMAERR	TXDMAE	RXDMAE
Type	RO	RO	RO	RO	RO	RO	RO	RO	RO	RO	RO	RO	RO	R/W	R/W	R/W
Reset	0	0	0	0	0	0	0	0	0	0	0	0	0	0	0	0

Bit/Field	Name	Type	Reset	Description
31:3	reserved	RO	0x00	Software should not rely on the value of a reserved bit. To provide compatibility with future products, the value of a reserved bit should be preserved across a read-modify-write operation.
2	DMAERR	R/W	0	DMA on Error If this bit is set to 1, DMA receive requests are automatically disabled when a receive error occurs.
1	TXDMAE	R/W	0	Transmit DMA Enable If this bit is set to 1, DMA for the transmit FIFO is enabled.
0	RXDMAE	R/W	0	Receive DMA Enable If this bit is set to 1, DMA for the receive FIFO is enabled.

Register 15: UART Peripheral Identification 4 (UARTPeriphID4), offset 0xFD0

The **UARTPeriphIDn** registers are hard-coded and the fields within the registers determine the reset values.

UART Peripheral Identification 4 (UARTPeriphID4)

UART0 base: 0x4000.C000
Offset 0xFD0
Type RO, reset 0x0000.0000

	31	30	29	28	27	26	25	24	23	22	21	20	19	18	17	16
	reserved															
Type	RO	RO	RO	RO	RO	RO	RO	RO	RO	RO	RO	RO	RO	RO	RO	RO
Reset	0	0	0	0	0	0	0	0	0	0	0	0	0	0	0	0

	15	14	13	12	11	10	9	8	7	6	5	4	3	2	1	0
	reserved								PID4							
Type	RO	RO	RO	RO	RO	RO	RO	RO	RO	RO	RO	RO	RO	RO	RO	RO
Reset	0	0	0	0	0	0	0	0	0	0	0	0	0	0	0	0

Bit/Field	Name	Type	Reset	Description
31:8	reserved	RO	0x00	Software should not rely on the value of a reserved bit. To provide compatibility with future products, the value of a reserved bit should be preserved across a read-modify-write operation.
7:0	PID4	RO	0x0000	UART Peripheral ID Register[7:0] Can be used by software to identify the presence of this peripheral.

Register 16: UART Peripheral Identification 5 (UARTPeriphID5), offset 0xFD4

The **UARTPeriphIDn** registers are hard-coded and the fields within the registers determine the reset values.

UART Peripheral Identification 5 (UARTPeriphID5)

UART0 base: 0x4000.C000
Offset 0xFD4
Type RO, reset 0x0000.0000

	31	30	29	28	27	26	25	24	23	22	21	20	19	18	17	16
	reserved															
Type	RO	RO	RO	RO	RO	RO	RO	RO	RO	RO	RO	RO	RO	RO	RO	RO
Reset	0	0	0	0	0	0	0	0	0	0	0	0	0	0	0	0

	15	14	13	12	11	10	9	8	7	6	5	4	3	2	1	0
	reserved								PID5							
Type	RO	RO	RO	RO	RO	RO	RO	RO	RO	RO	RO	RO	RO	RO	RO	RO
Reset	0	0	0	0	0	0	0	0	0	0	0	0	0	0	0	0

Bit/Field	Name	Type	Reset	Description
31:8	reserved	RO	0x00	Software should not rely on the value of a reserved bit. To provide compatibility with future products, the value of a reserved bit should be preserved across a read-modify-write operation.
7:0	PID5	RO	0x0000	UART Peripheral ID Register[15:8] Can be used by software to identify the presence of this peripheral.

Register 17: UART Peripheral Identification 6 (UARTPeriphID6), offset 0xFD8

The **UARTPeriphIDn** registers are hard-coded and the fields within the registers determine the reset values.

UART Peripheral Identification 6 (UARTPeriphID6)

UART0 base: 0x4000.C000
Offset 0xFD8
Type RO, reset 0x0000.0000

	31	30	29	28	27	26	25	24	23	22	21	20	19	18	17	16
	reserved															
Type	RO	RO	RO	RO	RO	RO	RO	RO	RO	RO	RO	RO	RO	RO	RO	RO
Reset	0	0	0	0	0	0	0	0	0	0	0	0	0	0	0	0

	15	14	13	12	11	10	9	8	7	6	5	4	3	2	1	0
	reserved								PID6							
Type	RO	RO	RO	RO	RO	RO	RO	RO	RO	RO	RO	RO	RO	RO	RO	RO
Reset	0	0	0	0	0	0	0	0	0	0	0	0	0	0	0	0

Bit/Field	Name	Type	Reset	Description
31:8	reserved	RO	0x00	Software should not rely on the value of a reserved bit. To provide compatibility with future products, the value of a reserved bit should be preserved across a read-modify-write operation.
7:0	PID6	RO	0x0000	UART Peripheral ID Register[23:16] Can be used by software to identify the presence of this peripheral.

Register 18: UART Peripheral Identification 7 (UARTPeriphID7), offset 0xFDC

The **UARTPeriphIDn** registers are hard-coded and the fields within the registers determine the reset values.

UART Peripheral Identification 7 (UARTPeriphID7)

UART0 base: 0x4000.C000
Offset 0xFDC
Type RO, reset 0x0000.0000

	31	30	29	28	27	26	25	24	23	22	21	20	19	18	17	16
	reserved															
Type	RO	RO	RO	RO	RO	RO	RO	RO	RO	RO	RO	RO	RO	RO	RO	RO
Reset	0	0	0	0	0	0	0	0	0	0	0	0	0	0	0	0

	15	14	13	12	11	10	9	8	7	6	5	4	3	2	1	0
	reserved								PID7							
Type	RO	RO	RO	RO	RO	RO	RO	RO	RO	RO	RO	RO	RO	RO	RO	RO
Reset	0	0	0	0	0	0	0	0	0	0	0	0	0	0	0	0

Bit/Field	Name	Type	Reset	Description
31:8	reserved	RO	0	Software should not rely on the value of a reserved bit. To provide compatibility with future products, the value of a reserved bit should be preserved across a read-modify-write operation.
7:0	PID7	RO	0x0000	UART Peripheral ID Register[31:24] Can be used by software to identify the presence of this peripheral.

Register 19: UART Peripheral Identification 0 (UARTPeriphID0), offset 0xFE0

The **UARTPeriphIDn** registers are hard-coded and the fields within the registers determine the reset values.

UART Peripheral Identification 0 (UARTPeriphID0)

UART0 base: 0x4000.C000
Offset 0xFE0
Type RO, reset 0x0000.0011

	31	30	29	28	27	26	25	24	23	22	21	20	19	18	17	16
	reserved															
Type	RO	RO	RO	RO	RO	RO	RO	RO	RO	RO	RO	RO	RO	RO	RO	RO
Reset	0	0	0	0	0	0	0	0	0	0	0	0	0	0	0	0

	15	14	13	12	11	10	9	8	7	6	5	4	3	2	1	0
	reserved								PID0							
Type	RO	RO	RO	RO	RO	RO	RO	RO	RO	RO	RO	RO	RO	RO	RO	RO
Reset	0	0	0	0	0	0	0	0	0	0	0	1	0	0	0	1

Bit/Field	Name	Type	Reset	Description
31:8	reserved	RO	0x00	Software should not rely on the value of a reserved bit. To provide compatibility with future products, the value of a reserved bit should be preserved across a read-modify-write operation.
7:0	PID0	RO	0x11	UART Peripheral ID Register[7:0] Can be used by software to identify the presence of this peripheral.

Register 20: UART Peripheral Identification 1 (UARTPeriphID1), offset 0xFE4

The **UARTPeriphIDn** registers are hard-coded and the fields within the registers determine the reset values.

UART Peripheral Identification 1 (UARTPeriphID1)

UART0 base: 0x4000.C000
Offset 0xFE4
Type RO, reset 0x0000.0000

	31	30	29	28	27	26	25	24	23	22	21	20	19	18	17	16
	reserved															
Type	RO	RO	RO	RO	RO	RO	RO	RO	RO	RO	RO	RO	RO	RO	RO	RO
Reset	0	0	0	0	0	0	0	0	0	0	0	0	0	0	0	0

	15	14	13	12	11	10	9	8	7	6	5	4	3	2	1	0
	reserved								PID1							
Type	RO	RO	RO	RO	RO	RO	RO	RO	RO	RO	RO	RO	RO	RO	RO	RO
Reset	0	0	0	0	0	0	0	0	0	0	0	0	0	0	0	0

Bit/Field	Name	Type	Reset	Description
31:8	reserved	RO	0x00	Software should not rely on the value of a reserved bit. To provide compatibility with future products, the value of a reserved bit should be preserved across a read-modify-write operation.
7:0	PID1	RO	0x00	UART Peripheral ID Register[15:8] Can be used by software to identify the presence of this peripheral.

Register 21: UART Peripheral Identification 2 (UARTPeriphID2), offset 0xFE8

The **UARTPeriphIDn** registers are hard-coded and the fields within the registers determine the reset values.

UART Peripheral Identification 2 (UARTPeriphID2)

UART0 base: 0x4000.C000
Offset 0xFE8
Type RO, reset 0x0000.0018

	31	30	29	28	27	26	25	24	23	22	21	20	19	18	17	16
	reserved															
Type	RO	RO	RO	RO	RO	RO	RO	RO	RO	RO	RO	RO	RO	RO	RO	RO
Reset	0	0	0	0	0	0	0	0	0	0	0	0	0	0	0	0

	15	14	13	12	11	10	9	8	7	6	5	4	3	2	1	0
	reserved								PID2							
Type	RO	RO	RO	RO	RO	RO	RO	RO	RO	RO	RO	RO	RO	RO	RO	RO
Reset	0	0	0	0	0	0	0	0	0	0	0	1	1	0	0	0

Bit/Field	Name	Type	Reset	Description
31:8	reserved	RO	0x00	Software should not rely on the value of a reserved bit. To provide compatibility with future products, the value of a reserved bit should be preserved across a read-modify-write operation.
7:0	PID2	RO	0x18	UART Peripheral ID Register[23:16] Can be used by software to identify the presence of this peripheral.

Register 22: UART Peripheral Identification 3 (UARTPeriphID3), offset 0xFEC

The **UARTPeriphIDn** registers are hard-coded and the fields within the registers determine the reset values.

UART Peripheral Identification 3 (UARTPeriphID3)

UART0 base: 0x4000.C000
Offset 0xFEC
Type RO, reset 0x0000.0001

	31	30	29	28	27	26	25	24	23	22	21	20	19	18	17	16
	reserved															
Type	RO	RO	RO	RO	RO	RO	RO	RO	RO	RO	RO	RO	RO	RO	RO	RO
Reset	0	0	0	0	0	0	0	0	0	0	0	0	0	0	0	0

	15	14	13	12	11	10	9	8	7	6	5	4	3	2	1	0
	reserved								PID3							
Type	RO	RO	RO	RO	RO	RO	RO	RO	RO	RO	RO	RO	RO	RO	RO	RO
Reset	0	0	0	0	0	0	0	0	0	0	0	0	0	0	0	1

Bit/Field	Name	Type	Reset	Description
31:8	reserved	RO	0x00	Software should not rely on the value of a reserved bit. To provide compatibility with future products, the value of a reserved bit should be preserved across a read-modify-write operation.
7:0	PID3	RO	0x01	UART Peripheral ID Register[31:24] Can be used by software to identify the presence of this peripheral.

Register 23: UART PrimeCell Identification 0 (UARTPCellID0), offset 0xFF0

The **UARTPCellIDn** registers are hard-coded and the fields within the registers determine the reset values.

UART PrimeCell Identification 0 (UARTPCellID0)

UART0 base: 0x4000.C000
Offset 0xFF0
Type RO, reset 0x0000.000D

	31	30	29	28	27	26	25	24	23	22	21	20	19	18	17	16
	reserved															
Type	RO	RO	RO	RO	RO	RO	RO	RO	RO	RO	RO	RO	RO	RO	RO	RO
Reset	0	0	0	0	0	0	0	0	0	0	0	0	0	0	0	0

	15	14	13	12	11	10	9	8	7	6	5	4	3	2	1	0
	reserved								CID0							
Type	RO	RO	RO	RO	RO	RO	RO	RO	RO	RO	RO	RO	RO	RO	RO	RO
Reset	0	0	0	0	0	0	0	0	0	0	0	0	1	1	0	1

Bit/Field	Name	Type	Reset	Description
31:8	reserved	RO	0x00	Software should not rely on the value of a reserved bit. To provide compatibility with future products, the value of a reserved bit should be preserved across a read-modify-write operation.
7:0	CID0	RO	0x0D	UART PrimeCell ID Register[7:0] Provides software a standard cross-peripheral identification system.

Register 24: UART PrimeCell Identification 1 (UARTPCellID1), offset 0xFF4

The **UARTPCellIDn** registers are hard-coded and the fields within the registers determine the reset values.

UART PrimeCell Identification 1 (UARTPCellID1)

UART0 base: 0x4000.C000
Offset 0xFF4
Type RO, reset 0x0000.00F0

	31	30	29	28	27	26	25	24	23	22	21	20	19	18	17	16
	reserved															
Type	RO	RO	RO	RO	RO	RO	RO	RO	RO	RO	RO	RO	RO	RO	RO	RO
Reset	0	0	0	0	0	0	0	0	0	0	0	0	0	0	0	0

	15	14	13	12	11	10	9	8	7	6	5	4	3	2	1	0
	reserved								CID1							
Type	RO	RO	RO	RO	RO	RO	RO	RO	RO	RO	RO	RO	RO	RO	RO	RO
Reset	0	0	0	0	0	0	0	0	1	1	1	1	0	0	0	0

Bit/Field	Name	Type	Reset	Description
31:8	reserved	RO	0x00	Software should not rely on the value of a reserved bit. To provide compatibility with future products, the value of a reserved bit should be preserved across a read-modify-write operation.
7:0	CID1	RO	0xF0	UART PrimeCell ID Register[15:8] Provides software a standard cross-peripheral identification system.

Register 25: UART PrimeCell Identification 2 (UARTPCellID2), offset 0xFF8

The **UARTPCellIDn** registers are hard-coded and the fields within the registers determine the reset values.

UART PrimeCell Identification 2 (UARTPCellID2)

UART0 base: 0x4000.C000
Offset 0xFF8
Type RO, reset 0x0000.0005

	31	30	29	28	27	26	25	24	23	22	21	20	19	18	17	16
	reserved															
Type	RO	RO	RO	RO	RO	RO	RO	RO	RO	RO	RO	RO	RO	RO	RO	RO
Reset	0	0	0	0	0	0	0	0	0	0	0	0	0	0	0	0

	15	14	13	12	11	10	9	8	7	6	5	4	3	2	1	0
	reserved								CID2							
Type	RO	RO	RO	RO	RO	RO	RO	RO	RO	RO	RO	RO	RO	RO	RO	RO
Reset	0	0	0	0	0	0	0	0	0	0	0	0	0	1	0	1

Bit/Field	Name	Type	Reset	Description
31:8	reserved	RO	0x00	Software should not rely on the value of a reserved bit. To provide compatibility with future products, the value of a reserved bit should be preserved across a read-modify-write operation.
7:0	CID2	RO	0x05	UART PrimeCell ID Register[23:16] Provides software a standard cross-peripheral identification system.

Register 26: UART PrimeCell Identification 3 (UARTPCellID3), offset 0xFFC

The **UARTPCellIDn** registers are hard-coded and the fields within the registers determine the reset values.

UART PrimeCell Identification 3 (UARTPCellID3)

UART0 base: 0x4000.C000
Offset 0xFFC
Type RO, reset 0x0000.00B1

	31	30	29	28	27	26	25	24	23	22	21	20	19	18	17	16
	reserved															
Type	RO	RO	RO	RO	RO	RO	RO	RO	RO	RO	RO	RO	RO	RO	RO	RO
Reset	0	0	0	0	0	0	0	0	0	0	0	0	0	0	0	0

	15	14	13	12	11	10	9	8	7	6	5	4	3	2	1	0
	reserved								CID3							
Type	RO	RO	RO	RO	RO	RO	RO	RO	RO	RO	RO	RO	RO	RO	RO	RO
Reset	0	0	0	0	0	0	0	0	1	0	1	1	0	0	0	1

Bit/Field	Name	Type	Reset	Description
31:8	reserved	RO	0x00	Software should not rely on the value of a reserved bit. To provide compatibility with future products, the value of a reserved bit should be preserved across a read-modify-write operation.
7:0	CID3	RO	0xB1	UART PrimeCell ID Register[31:24] Provides software a standard cross-peripheral identification system.

13 Synchronous Serial Interface (SSI)

The Stellaris® Synchronous Serial Interface (SSI) is a master or slave interface for synchronous serial communication with peripheral devices that have either Freescale SPI, MICROWIRE, or Texas Instruments synchronous serial interfaces.

The Stellaris SSI module has the following features:

- Master or slave operation
- Support for Direct Memory Access (DMA)
- Programmable clock bit rate and prescale
- Separate transmit and receive FIFOs, 16 bits wide, 8 locations deep
- Programmable interface operation for Freescale SPI, MICROWIRE, or Texas Instruments synchronous serial interfaces
- Programmable data frame size from 4 to 16 bits
- Internal loopback test mode for diagnostic/debug testing

13.1 Block Diagram

Figure 13-1. SSI Module Block Diagram

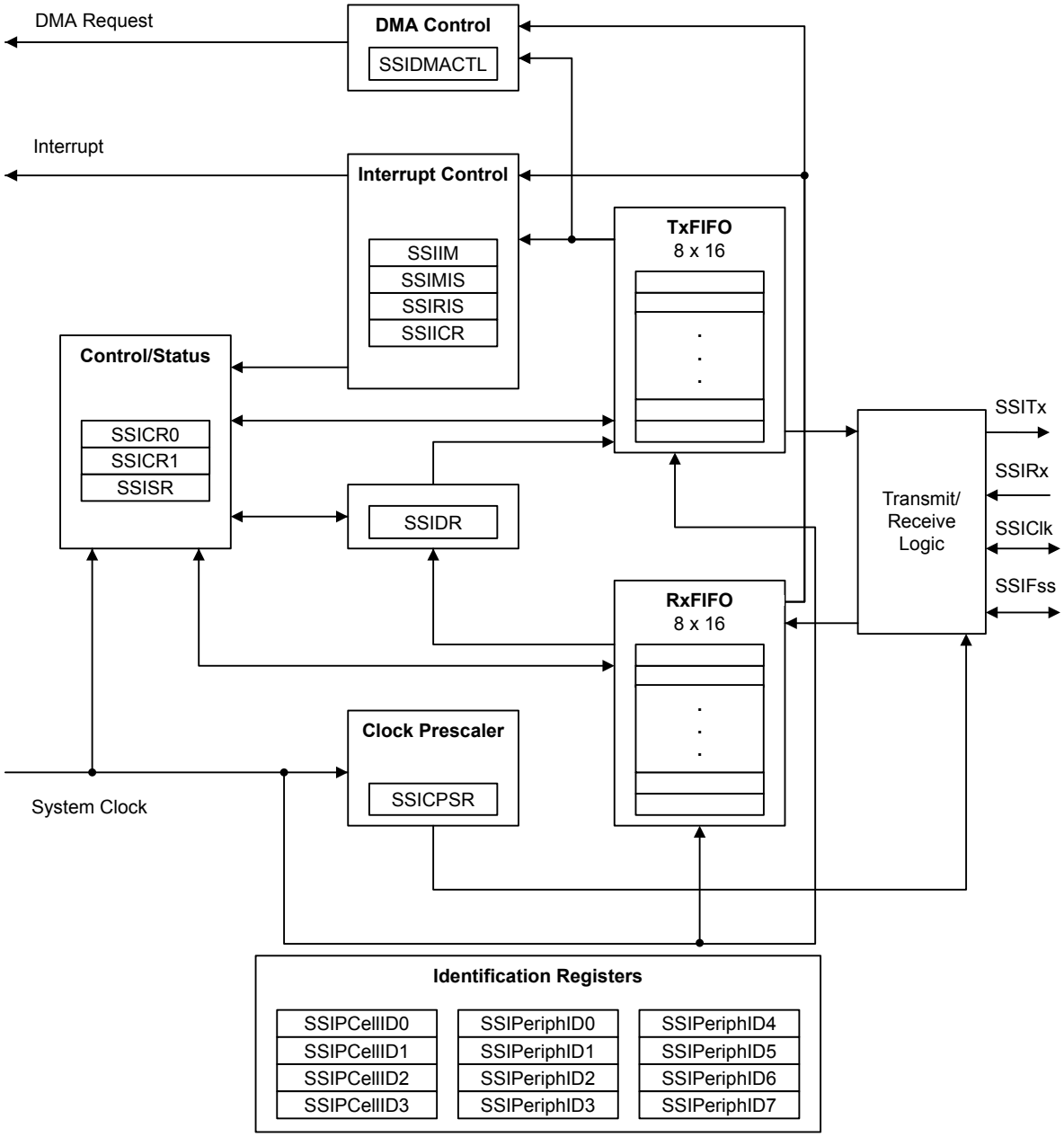

13.2 Signal Description

Table 13-1 on page 511 lists the external signals of the SSI module and describes the function of each. The SSI signals are alternate functions for some GPIO signals and default to be GPIO signals at reset., with the exception of the `SSI0Clk`, `SSI0Fss`, `SSI0Rx`, and `SSI0Tx` pins which default to the SSI function. The column in the table below titled "Pin Assignment" lists the possible GPIO pin placements for the SSI signals. The `AFSEL` bit in the **GPIO Alternate Function Select**

(GPIOAFSEL) register (page 344) should be set to choose the SSI function. For more information on configuring GPIOs, see "General-Purpose Input/Outputs (GPIOs)" on page 324.

Table 13-1. SSI Signals (64LQFP)

Pin Name	Pin Number	Pin Type	Buffer Type[a]	Description
SSI0Clk	19	I/O	TTL	SSI module 0 clock.
SSI0Fss	20	I/O	TTL	SSI module 0 frame signal.
SSI0Rx	21	I	TTL	SSI module 0 receive.
SSI0Tx	22	O	TTL	SSI module 0 transmit.

a. The TTL designation indicates the pin has TTL-compatible voltage levels.

13.3 Functional Description

The SSI performs serial-to-parallel conversion on data received from a peripheral device. The CPU accesses data, control, and status information. The transmit and receive paths are buffered with internal FIFO memories allowing up to eight 16-bit values to be stored independently in both transmit and receive modes. The SSI also supports the DMA interface. The transmit and receive FIFOs can be programmed as destination/source addresses in the DMA module. DMA operation is enabled by setting the appropriate bit(s) in the **SSIDMACTL** register (see page 536).

13.3.1 Bit Rate Generation

The SSI includes a programmable bit rate clock divider and prescaler to generate the serial output clock. Bit rates are supported to 2 MHz and higher, although maximum bit rate is determined by peripheral devices.

The serial bit rate is derived by dividing down the input clock (FSysClk). The clock is first divided by an even prescale value CPSDVSR from 2 to 254, which is programmed in the **SSI Clock Prescale (SSICPSR)** register (see page 530). The clock is further divided by a value from 1 to 256, which is 1 + *SCR*, where *SCR* is the value programmed in the **SSI Control0 (SSICR0)** register (see page 523).

The frequency of the output clock SSIClk is defined by:

```
SSIClk = FSysClk / (CPSDVSR * (1 + SCR))
```

Note: For master mode, the system clock must be at least two times faster than the SSIClk. For slave mode, the system clock must be at least 12 times faster than the SSIClk.

See "Synchronous Serial Interface (SSI)" on page 682 to view SSI timing parameters.

13.3.2 FIFO Operation

13.3.2.1 Transmit FIFO

The common transmit FIFO is a 16-bit wide, 8-locations deep, first-in, first-out memory buffer. The CPU writes data to the FIFO by writing the **SSI Data (SSIDR)** register (see page 527), and data is stored in the FIFO until it is read out by the transmission logic.

When configured as a master or a slave, parallel data is written into the transmit FIFO prior to serial conversion and transmission to the attached slave or master, respectively, through the SSITx pin.

In slave mode, the SSI transmits data each time the master initiates a transaction. If the transmit FIFO is empty and the master initiates, the slave transmits the 8th most recent value in the transmit FIFO. If less than 8 values have been written to the transmit FIFO since the SSI module clock was enabled using the SSI bit in the **RGCG1** register, then 0 is transmitted. Care should be taken to

ensure that valid data is in the FIFO as needed. The SSI can be configured to generate an interrupt or a µDMA request when the FIFO is empty.

13.3.2.2 Receive FIFO

The common receive FIFO is a 16-bit wide, 8-locations deep, first-in, first-out memory buffer. Received data from the serial interface is stored in the buffer until read out by the CPU, which accesses the read FIFO by reading the **SSIDR** register.

When configured as a master or slave, serial data received through the `SSIRx` pin is registered prior to parallel loading into the attached slave or master receive FIFO, respectively.

13.3.3 Interrupts

The SSI can generate interrupts when the following conditions are observed:

- Transmit FIFO service
- Receive FIFO service
- Receive FIFO time-out
- Receive FIFO overrun

All of the interrupt events are ORed together before being sent to the interrupt controller, so the SSI can only generate a single interrupt request to the controller at any given time. You can mask each of the four individual maskable interrupts by setting the appropriate bits in the **SSI Interrupt Mask (SSIIM)** register (see page 531). Setting the appropriate mask bit to 1 enables the interrupt.

Provision of the individual outputs, as well as a combined interrupt output, allows use of either a global interrupt service routine, or modular device drivers to handle interrupts. The transmit and receive dynamic dataflow interrupts have been separated from the status interrupts so that data can be read or written in response to the FIFO trigger levels. The status of the individual interrupt sources can be read from the **SSI Raw Interrupt Status (SSIRIS)** and **SSI Masked Interrupt Status (SSIMIS)** registers (see page 533 and page 534, respectively).

13.3.4 Frame Formats

Each data frame is between 4 and 16 bits long, depending on the size of data programmed, and is transmitted starting with the MSB. There are three basic frame types that can be selected:

- Texas Instruments synchronous serial
- Freescale SPI
- MICROWIRE

For all three formats, the serial clock (`SSIClk`) is held inactive while the SSI is idle, and `SSIClk` transitions at the programmed frequency only during active transmission or reception of data. The idle state of `SSIClk` is utilized to provide a receive timeout indication that occurs when the receive FIFO still contains data after a timeout period.

For Freescale SPI and MICROWIRE frame formats, the serial frame (`SSIFss`) pin is active Low, and is asserted (pulled down) during the entire transmission of the frame.

For Texas Instruments synchronous serial frame format, the `SSIFss` pin is pulsed for one serial clock period starting at its rising edge, prior to the transmission of each frame. For this frame format,

both the SSI and the off-chip slave device drive their output data on the rising edge of SSIClk, and latch data from the other device on the falling edge.

Unlike the full-duplex transmission of the other two frame formats, the MICROWIRE format uses a special master-slave messaging technique, which operates at half-duplex. In this mode, when a frame begins, an 8-bit control message is transmitted to the off-chip slave. During this transmit, no incoming data is received by the SSI. After the message has been sent, the off-chip slave decodes it and, after waiting one serial clock after the last bit of the 8-bit control message has been sent, responds with the requested data. The returned data can be 4 to 16 bits in length, making the total frame length anywhere from 13 to 25 bits.

13.3.4.1 Texas Instruments Synchronous Serial Frame Format

Figure 13-2 on page 513 shows the Texas Instruments synchronous serial frame format for a single transmitted frame.

Figure 13-2. TI Synchronous Serial Frame Format (Single Transfer)

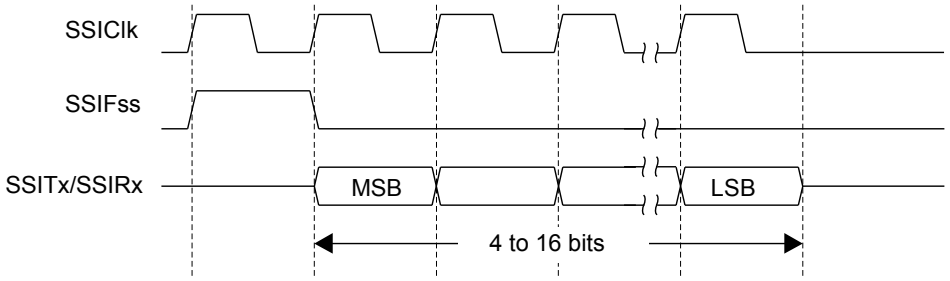

In this mode, SSIClk and SSIFss are forced Low, and the transmit data line SSITx is tristated whenever the SSI is idle. Once the bottom entry of the transmit FIFO contains data, SSIFss is pulsed High for one SSIClk period. The value to be transmitted is also transferred from the transmit FIFO to the serial shift register of the transmit logic. On the next rising edge of SSIClk, the MSB of the 4 to 16-bit data frame is shifted out on the SSITx pin. Likewise, the MSB of the received data is shifted onto the SSIRx pin by the off-chip serial slave device.

Both the SSI and the off-chip serial slave device then clock each data bit into their serial shifter on the falling edge of each SSIClk. The received data is transferred from the serial shifter to the receive FIFO on the first rising edge of SSIClk after the LSB has been latched.

Figure 13-3 on page 514 shows the Texas Instruments synchronous serial frame format when back-to-back frames are transmitted.

Figure 13-3. TI Synchronous Serial Frame Format (Continuous Transfer)

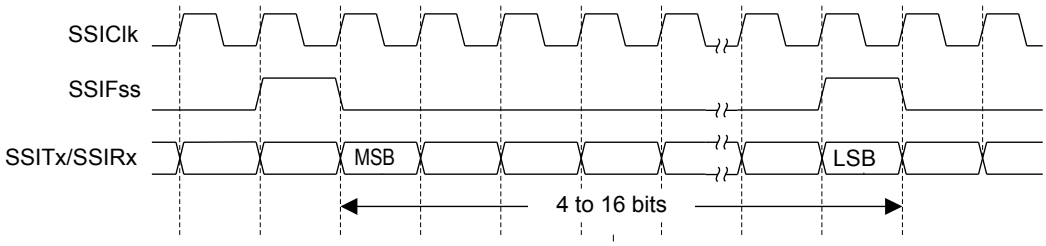

13.3.4.2 Freescale SPI Frame Format

The Freescale SPI interface is a four-wire interface where the `SSIFss` signal behaves as a slave select. The main feature of the Freescale SPI format is that the inactive state and phase of the `SSIClk` signal are programmable through the `SPO` and `SPH` bits within the **SSISCR0** control register.

SPO Clock Polarity Bit

When the `SPO` clock polarity control bit is Low, it produces a steady state Low value on the `SSIClk` pin. If the `SPO` bit is High, a steady state High value is placed on the `SSIClk` pin when data is not being transferred.

SPH Phase Control Bit

The `SPH` phase control bit selects the clock edge that captures data and allows it to change state. It has the most impact on the first bit transmitted by either allowing or not allowing a clock transition before the first data capture edge. When the `SPH` phase control bit is Low, data is captured on the first clock edge transition. If the `SPH` bit is High, data is captured on the second clock edge transition.

13.3.4.3 Freescale SPI Frame Format with SPO=0 and SPH=0

Single and continuous transmission signal sequences for Freescale SPI format with SPO=0 and SPH=0 are shown in Figure 13-4 on page 514 and Figure 13-5 on page 515.

Figure 13-4. Freescale SPI Format (Single Transfer) with SPO=0 and SPH=0

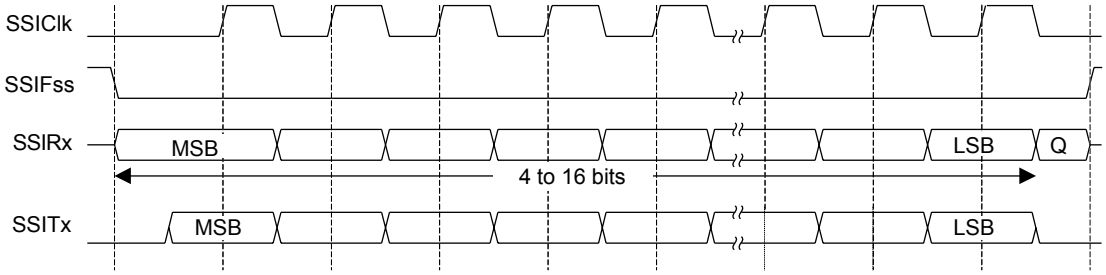

Note: Q is undefined.

Figure 13-5. Freescale SPI Format (Continuous Transfer) with SPO=0 and SPH=0

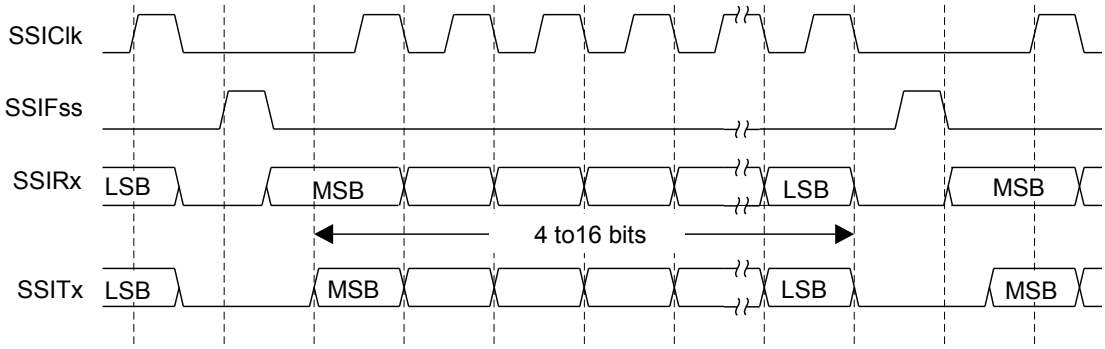

In this configuration, during idle periods:

- `SSIClk` is forced Low
- `SSIFss` is forced High
- The transmit data line `SSITx` is arbitrarily forced Low
- When the SSI is configured as a master, it enables the `SSIClk` pad
- When the SSI is configured as a slave, it disables the `SSIClk` pad

If the SSI is enabled and there is valid data within the transmit FIFO, the start of transmission is signified by the `SSIFss` master signal being driven Low. This causes slave data to be enabled onto the `SSIRx` input line of the master. The master `SSITx` output pad is enabled.

One half `SSIClk` period later, valid master data is transferred to the `SSITx` pin. Now that both the master and slave data have been set, the `SSIClk` master clock pin goes High after one further half `SSIClk` period.

The data is now captured on the rising and propagated on the falling edges of the `SSIClk` signal.

In the case of a single word transmission, after all bits of the data word have been transferred, the `SSIFss` line is returned to its idle High state one `SSIClk` period after the last bit has been captured.

However, in the case of continuous back-to-back transmissions, the `SSIFss` signal must be pulsed High between each data word transfer. This is because the slave select pin freezes the data in its serial peripheral register and does not allow it to be altered if the `SPH` bit is logic zero. Therefore, the master device must raise the `SSIFss` pin of the slave device between each data transfer to enable the serial peripheral data write. On completion of the continuous transfer, the `SSIFss` pin is returned to its idle state one `SSIClk` period after the last bit has been captured.

13.3.4.4 Freescale SPI Frame Format with SPO=0 and SPH=1

The transfer signal sequence for Freescale SPI format with SPO=0 and SPH=1 is shown in Figure 13-6 on page 516, which covers both single and continuous transfers.

Figure 13-6. Freescale SPI Frame Format with SPO=0 and SPH=1

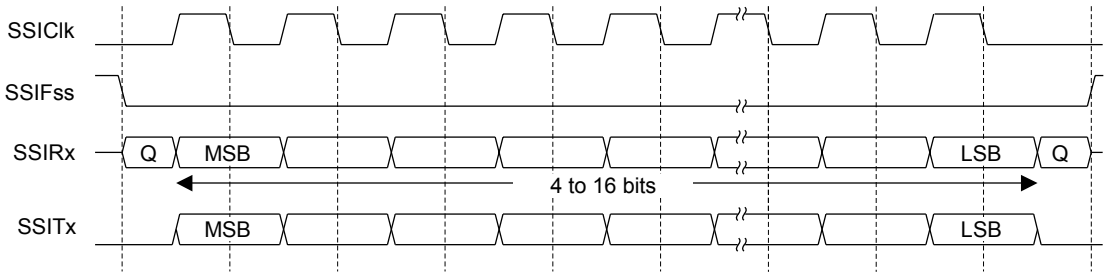

Note: Q is undefined.

In this configuration, during idle periods:

- `SSIClk` is forced Low
- `SSIFss` is forced High
- The transmit data line `SSITx` is arbitrarily forced Low
- When the SSI is configured as a master, it enables the `SSIClk` pad
- When the SSI is configured as a slave, it disables the `SSIClk` pad

If the SSI is enabled and there is valid data within the transmit FIFO, the start of transmission is signified by the `SSIFss` master signal being driven Low. The master `SSITx` output is enabled. After a further one half `SSIClk` period, both master and slave valid data is enabled onto their respective transmission lines. At the same time, the `SSIClk` is enabled with a rising edge transition.

Data is then captured on the falling edges and propagated on the rising edges of the `SSIClk` signal.

In the case of a single word transfer, after all bits have been transferred, the `SSIFss` line is returned to its idle High state one `SSIClk` period after the last bit has been captured.

For continuous back-to-back transfers, the `SSIFss` pin is held Low between successive data words and termination is the same as that of the single word transfer.

13.3.4.5 Freescale SPI Frame Format with SPO=1 and SPH=0

Single and continuous transmission signal sequences for Freescale SPI format with SPO=1 and SPH=0 are shown in Figure 13-7 on page 516 and Figure 13-8 on page 517.

Figure 13-7. Freescale SPI Frame Format (Single Transfer) with SPO=1 and SPH=0

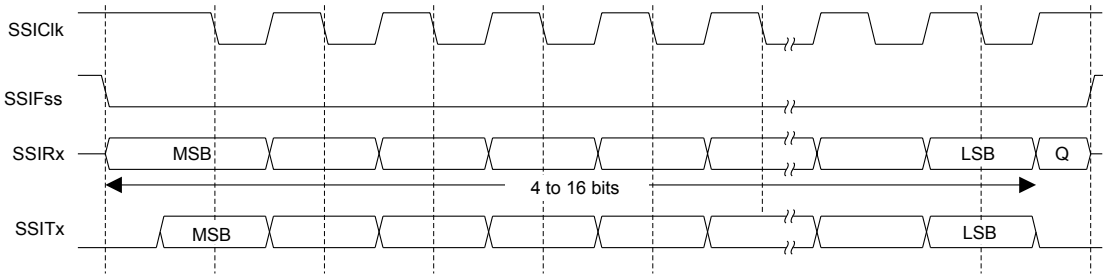

Note: Q is undefined.

Figure 13-8. Freescale SPI Frame Format (Continuous Transfer) with SPO=1 and SPH=0

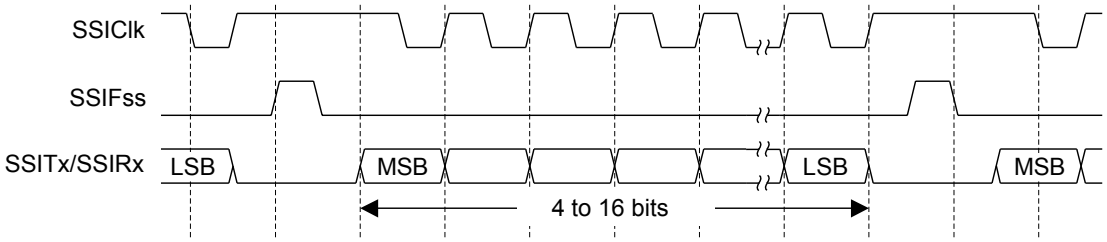

In this configuration, during idle periods:

- `SSIClk` is forced High
- `SSIFss` is forced High
- The transmit data line `SSITx` is arbitrarily forced Low
- When the SSI is configured as a master, it enables the `SSIClk` pad
- When the SSI is configured as a slave, it disables the `SSIClk` pad

If the SSI is enabled and there is valid data within the transmit FIFO, the start of transmission is signified by the `SSIFss` master signal being driven Low, which causes slave data to be immediately transferred onto the `SSIRx` line of the master. The master `SSITx` output pad is enabled.

One half period later, valid master data is transferred to the `SSITx` line. Now that both the master and slave data have been set, the `SSIClk` master clock pin becomes Low after one further half `SSIClk` period. This means that data is captured on the falling edges and propagated on the rising edges of the `SSIClk` signal.

In the case of a single word transmission, after all bits of the data word are transferred, the `SSIFss` line is returned to its idle High state one `SSIClk` period after the last bit has been captured.

However, in the case of continuous back-to-back transmissions, the `SSIFss` signal must be pulsed High between each data word transfer. This is because the slave select pin freezes the data in its serial peripheral register and does not allow it to be altered if the `SPH` bit is logic zero. Therefore, the master device must raise the `SSIFss` pin of the slave device between each data transfer to enable the serial peripheral data write. On completion of the continuous transfer, the `SSIFss` pin is returned to its idle state one `SSIClk` period after the last bit has been captured.

13.3.4.6 Freescale SPI Frame Format with SPO=1 and SPH=1

The transfer signal sequence for Freescale SPI format with SPO=1 and SPH=1 is shown in Figure 13-9 on page 518, which covers both single and continuous transfers.

Figure 13-9. Freescale SPI Frame Format with SPO=1 and SPH=1

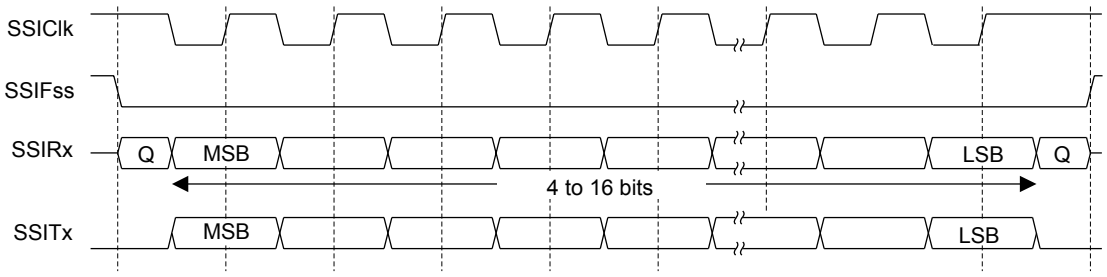

Note: Q is undefined.

In this configuration, during idle periods:

- `SSIClk` is forced High
- `SSIFss` is forced High
- The transmit data line `SSITx` is arbitrarily forced Low
- When the SSI is configured as a master, it enables the `SSIClk` pad
- When the SSI is configured as a slave, it disables the `SSIClk` pad

If the SSI is enabled and there is valid data within the transmit FIFO, the start of transmission is signified by the `SSIFss` master signal being driven Low. The master `SSITx` output pad is enabled. After a further one-half `SSIClk` period, both master and slave data are enabled onto their respective transmission lines. At the same time, `SSIClk` is enabled with a falling edge transition. Data is then captured on the rising edges and propagated on the falling edges of the `SSIClk` signal.

After all bits have been transferred, in the case of a single word transmission, the `SSIFss` line is returned to its idle high state one `SSIClk` period after the last bit has been captured.

For continuous back-to-back transmissions, the `SSIFss` pin remains in its active Low state, until the final bit of the last word has been captured, and then returns to its idle state as described above.

For continuous back-to-back transfers, the `SSIFss` pin is held Low between successive data words and termination is the same as that of the single word transfer.

13.3.4.7 MICROWIRE Frame Format

Figure 13-10 on page 518 shows the MICROWIRE frame format, again for a single frame. Figure 13-11 on page 519 shows the same format when back-to-back frames are transmitted.

Figure 13-10. MICROWIRE Frame Format (Single Frame)

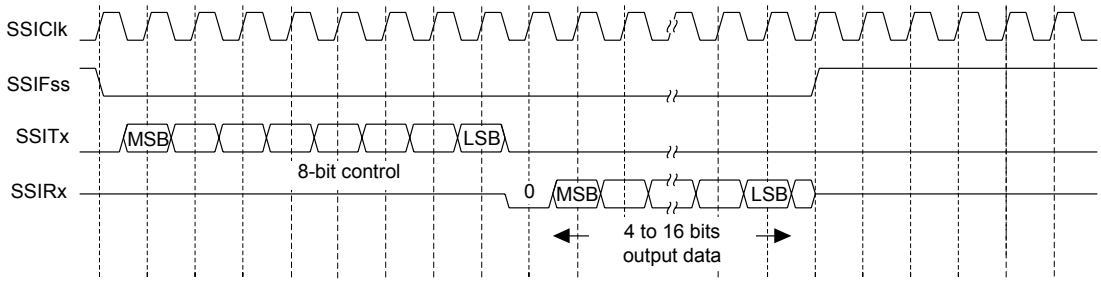

MICROWIRE format is very similar to SPI format, except that transmission is half-duplex instead of full-duplex, using a master-slave message passing technique. Each serial transmission begins with an 8-bit control word that is transmitted from the SSI to the off-chip slave device. During this transmission, no incoming data is received by the SSI. After the message has been sent, the off-chip slave decodes it and, after waiting one serial clock after the last bit of the 8-bit control message has been sent, responds with the required data. The returned data is 4 to 16 bits in length, making the total frame length anywhere from 13 to 25 bits.

In this configuration, during idle periods:

- `SSIClk` is forced Low
- `SSIFss` is forced High
- The transmit data line `SSITx` is arbitrarily forced Low

A transmission is triggered by writing a control byte to the transmit FIFO. The falling edge of `SSIFss` causes the value contained in the bottom entry of the transmit FIFO to be transferred to the serial shift register of the transmit logic, and the MSB of the 8-bit control frame to be shifted out onto the `SSITx` pin. `SSIFss` remains Low for the duration of the frame transmission. The `SSIRx` pin remains tristated during this transmission.

The off-chip serial slave device latches each control bit into its serial shifter on the rising edge of each `SSIClk`. After the last bit is latched by the slave device, the control byte is decoded during a one clock wait-state, and the slave responds by transmitting data back to the SSI. Each bit is driven onto the `SSIRx` line on the falling edge of `SSIClk`. The SSI in turn latches each bit on the rising edge of `SSIClk`. At the end of the frame, for single transfers, the `SSIFss` signal is pulled High one clock period after the last bit has been latched in the receive serial shifter, which causes the data to be transferred to the receive FIFO.

Note: The off-chip slave device can tristate the receive line either on the falling edge of `SSIClk` after the LSB has been latched by the receive shifter, or when the `SSIFss` pin goes High.

For continuous transfers, data transmission begins and ends in the same manner as a single transfer. However, the `SSIFss` line is continuously asserted (held Low) and transmission of data occurs back-to-back. The control byte of the next frame follows directly after the LSB of the received data from the current frame. Each of the received values is transferred from the receive shifter on the falling edge of `SSIClk`, after the LSB of the frame has been latched into the SSI.

Figure 13-11. MICROWIRE Frame Format (Continuous Transfer)

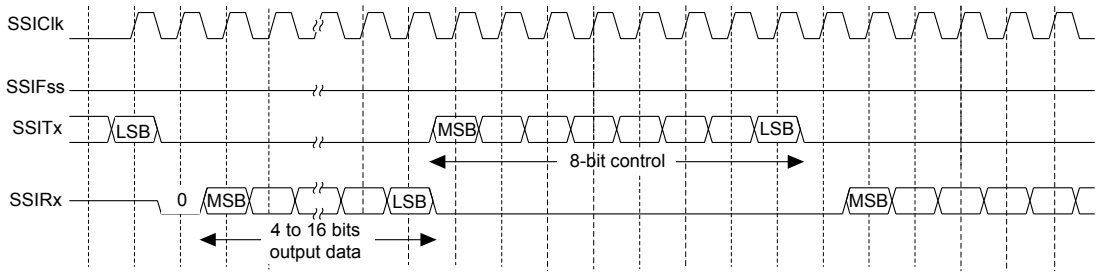

In the MICROWIRE mode, the SSI slave samples the first bit of receive data on the rising edge of `SSIClk` after `SSIFss` has gone Low. Masters that drive a free-running `SSIClk` must ensure that the `SSIFss` signal has sufficient setup and hold margins with respect to the rising edge of `SSIClk`.

Figure 13-12 on page 520 illustrates these setup and hold time requirements. With respect to the SSIClk rising edge on which the first bit of receive data is to be sampled by the SSI slave, SSIFss must have a setup of at least two times the period of SSIClk on which the SSI operates. With respect to the SSIClk rising edge previous to this edge, SSIFss must have a hold of at least one SSIClk period.

Figure 13-12. MICROWIRE Frame Format, SSIFss Input Setup and Hold Requirements

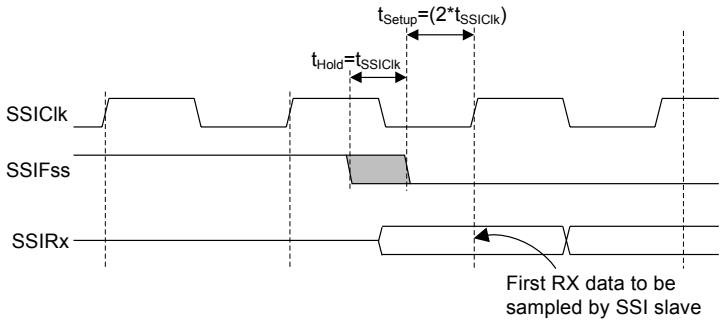

13.3.5 DMA Operation

The SSI peripheral provides an interface connected to the µDMA controller. The DMA operation of the SSI is enabled through the **SSI DMA Control (SSIDMACTL)** register. When DMA operation is enabled, the SSI will assert a DMA request on the receive or transmit channel when the associated FIFO can transfer data. For the receive channel, a single transfer request is asserted whenever there is any data in the receive FIFO. A burst transfer request is asserted whenever the amount of data in the receive FIFO is 4 or more items. For the transmit channel, a single transfer request is asserted whenever there is at least one empty location in the transmit FIFO. The burst request is asserted whenever the transmit FIFO has 4 or more empty slots. The single and burst DMA transfer requests are handled automatically by the µDMA controller depending how the DMA channel is configured. To enable DMA operation for the receive channel, the RXDMAE bit of the **DMA Control (SSIDMACTL)** register should be set. To enable DMA operation for the transmit channel, the TXDMAE bit of **SSIDMACTL** should be set. If DMA is enabled, then the µDMA controller will trigger an interrupt when a transfer is complete. The interrupt will occur on the SSI interrupt vector. Therefore, if interrupts are used for SSI operation and DMA is enabled, the SSI interrupt handler must be designed to handle the µDMA completion interrupt.

See “Micro Direct Memory Access (µDMA)” on page 263 for more details about programming the µDMA controller.

13.4 Initialization and Configuration

To use the SSI, its peripheral clock must be enabled by setting the SSI bit in the **RCGC1** register.

For each of the frame formats, the SSI is configured using the following steps:

1. Ensure that the SSE bit in the **SSICR1** register is disabled before making any configuration changes.
2. Select whether the SSI is a master or slave:
   a. For master operations, set the **SSICR1** register to 0x0000.0000.
   b. For slave mode (output enabled), set the **SSICR1** register to 0x0000.0004.

   c. For slave mode (output disabled), set the **SSICR1** register to 0x0000.000C.

3. Configure the clock prescale divisor by writing the **SSICPSR** register.
4. Write the **SSICR0** register with the following configuration:
   - Serial clock rate (SCR)
   - Desired clock phase/polarity, if using Freescale SPI mode (SPH and SPO)
   - The protocol mode: Freescale SPI, TI SSF, MICROWIRE (FRF)
   - The data size (DSS)
5. Optionally, configure the µDMA channel (see "Micro Direct Memory Access (µDMA)" on page 263) and enable the DMA option(s) in the **SSIDMACTL** register.
6. Enable the SSI by setting the SSE bit in the **SSICR1** register.

As an example, assume the SSI must be configured to operate with the following parameters:

- Master operation
- Freescale SPI mode (SPO=1, SPH=1)
- 1 Mbps bit rate
- 8 data bits

Assuming the system clock is 20 MHz, the bit rate calculation would be:

```
FSSIClk = FSysClk / (CPSDVSR * (1 + SCR))
1x10^6 = 20x10^6 / (CPSDVSR * (1 + SCR))
```

In this case, if CPSDVSR=2, SCR must be 9.

The configuration sequence would be as follows:

1. Ensure that the SSE bit in the **SSICR1** register is disabled.
2. Write the **SSICR1** register with a value of 0x0000.0000.
3. Write the **SSICPSR** register with a value of 0x0000.0002.
4. Write the **SSICR0** register with a value of 0x0000.09C7.
5. The SSI is then enabled by setting the SSE bit in the **SSICR1** register to 1.

13.5 Register Map

Table 13-2 on page 522 lists the SSI registers. The offset listed is a hexadecimal increment to the register's address, relative to that SSI module's base address:

- SSI0: 0x4000.8000

Note that the SSI module clock must be enabled before the registers can be programmed (see page 218). There must be a delay of 3 system clocks after the SSI module clock is enabled before any SSI module registers are accessed.

Note: The SSI must be disabled (see the SSE bit in the **SSICR1** register) before any of the control registers are reprogrammed.

Table 13-2. SSI Register Map

Offset	Name	Type	Reset	Description	See page
0x000	SSICR0	R/W	0x0000.0000	SSI Control 0	523
0x004	SSICR1	R/W	0x0000.0000	SSI Control 1	525
0x008	SSIDR	R/W	0x0000.0000	SSI Data	527
0x00C	SSISR	RO	0x0000.0003	SSI Status	528
0x010	SSICPSR	R/W	0x0000.0000	SSI Clock Prescale	530
0x014	SSIIM	R/W	0x0000.0000	SSI Interrupt Mask	531
0x018	SSIRIS	RO	0x0000.0008	SSI Raw Interrupt Status	533
0x01C	SSIMIS	RO	0x0000.0000	SSI Masked Interrupt Status	534
0x020	SSIICR	W1C	0x0000.0000	SSI Interrupt Clear	535
0x024	SSIDMACTL	R/W	0x0000.0000	SSI DMA Control	536
0xFD0	SSIPeriphID4	RO	0x0000.0000	SSI Peripheral Identification 4	537
0xFD4	SSIPeriphID5	RO	0x0000.0000	SSI Peripheral Identification 5	538
0xFD8	SSIPeriphID6	RO	0x0000.0000	SSI Peripheral Identification 6	539
0xFDC	SSIPeriphID7	RO	0x0000.0000	SSI Peripheral Identification 7	540
0xFE0	SSIPeriphID0	RO	0x0000.0022	SSI Peripheral Identification 0	541
0xFE4	SSIPeriphID1	RO	0x0000.0000	SSI Peripheral Identification 1	542
0xFE8	SSIPeriphID2	RO	0x0000.0018	SSI Peripheral Identification 2	543
0xFEC	SSIPeriphID3	RO	0x0000.0001	SSI Peripheral Identification 3	544
0xFF0	SSIPCellID0	RO	0x0000.000D	SSI PrimeCell Identification 0	545
0xFF4	SSIPCellID1	RO	0x0000.00F0	SSI PrimeCell Identification 1	546
0xFF8	SSIPCellID2	RO	0x0000.0005	SSI PrimeCell Identification 2	547
0xFFC	SSIPCellID3	RO	0x0000.00B1	SSI PrimeCell Identification 3	548

13.6 Register Descriptions

The remainder of this section lists and describes the SSI registers, in numerical order by address offset.

Register 1: SSI Control 0 (SSICR0), offset 0x000

SSICR0 is control register 0 and contains bit fields that control various functions within the SSI module. Functionality such as protocol mode, clock rate, and data size are configured in this register.

SSI Control 0 (SSICR0)

SSI0 base: 0x4000.8000
Offset 0x000
Type R/W, reset 0x0000.0000

	31	30	29	28	27	26	25	24	23	22	21	20	19	18	17	16
	reserved															
Type	RO	RO	RO	RO	RO	RO	RO	RO	RO	RO	RO	RO	RO	RO	RO	RO
Reset	0	0	0	0	0	0	0	0	0	0	0	0	0	0	0	0

	15	14	13	12	11	10	9	8	7	6	5	4	3	2	1	0
	SCR								SPH	SPO	FRF		DSS			
Type	R/W	R/W	R/W	R/W	R/W	R/W	R/W	R/W	R/W	R/W	R/W	R/W	R/W	R/W	R/W	R/W
Reset	0	0	0	0	0	0	0	0	0	0	0	0	0	0	0	0

Bit/Field	Name	Type	Reset	Description
31:16	reserved	RO	0x00	Software should not rely on the value of a reserved bit. To provide compatibility with future products, the value of a reserved bit should be preserved across a read-modify-write operation.
15:8	SCR	R/W	0x0000	SSI Serial Clock Rate The value SCR is used to generate the transmit and receive bit rate of the SSI. The bit rate is: `BR=FSSIClk/(CPSDVSR * (1 + SCR))` where CPSDVSR is an even value from 2-254 programmed in the **SSICPSR** register, and SCR is a value from 0-255.
7	SPH	R/W	0	SSI Serial Clock Phase This bit is only applicable to the Freescale SPI Format. The SPH control bit selects the clock edge that captures data and allows it to change state. It has the most impact on the first bit transmitted by either allowing or not allowing a clock transition before the first data capture edge. When the SPH bit is 0, data is captured on the first clock edge transition. If SPH is 1, data is captured on the second clock edge transition.
6	SPO	R/W	0	SSI Serial Clock Polarity This bit is only applicable to the Freescale SPI Format. When the SPO bit is 0, it produces a steady state Low value on the SSIClk pin. If SPO is 1, a steady state High value is placed on the SSIClk pin when data is not being transferred.
5:4	FRF	R/W	0x0	SSI Frame Format Select The FRF values are defined as follows: Value Frame Format 0x0 Freescale SPI Frame Format 0x1 Texas Instruments Synchronous Serial Frame Format 0x2 MICROWIRE Frame Format 0x3 Reserved

Bit/Field	Name	Type	Reset	Description
3:0	DSS	R/W	0x00	SSI Data Size Select The DSS values are defined as follows: Value — Data Size 0x0-0x2 — Reserved 0x3 — 4-bit data 0x4 — 5-bit data 0x5 — 6-bit data 0x6 — 7-bit data 0x7 — 8-bit data 0x8 — 9-bit data 0x9 — 10-bit data 0xA — 11-bit data 0xB — 12-bit data 0xC — 13-bit data 0xD — 14-bit data 0xE — 15-bit data 0xF — 16-bit data

Register 2: SSI Control 1 (SSICR1), offset 0x004

SSICR1 is control register 1 and contains bit fields that control various functions within the SSI module. Master and slave mode functionality is controlled by this register.

SSI Control 1 (SSICR1)

SSI0 base: 0x4000.8000
Offset 0x004
Type R/W, reset 0x0000.0000

	31	30	29	28	27	26	25	24	23	22	21	20	19	18	17	16
	reserved															
Type	RO	RO	RO	RO	RO	RO	RO	RO	RO	RO	RO	RO	RO	RO	RO	RO
Reset	0	0	0	0	0	0	0	0	0	0	0	0	0	0	0	0

	15	14	13	12	11	10	9	8	7	6	5	4	3	2	1	0
	reserved												SOD	MS	SSE	LBM
Type	RO	RO	RO	RO	RO	RO	RO	RO	RO	RO	RO	RO	R/W	R/W	R/W	R/W
Reset	0	0	0	0	0	0	0	0	0	0	0	0	0	0	0	0

Bit/Field	Name	Type	Reset	Description
31:4	reserved	RO	0x00	Software should not rely on the value of a reserved bit. To provide compatibility with future products, the value of a reserved bit should be preserved across a read-modify-write operation.
3	SOD	R/W	0	SSI Slave Mode Output Disable This bit is relevant only in the Slave mode (`MS=1`). In multiple-slave systems, it is possible for the SSI master to broadcast a message to all slaves in the system while ensuring that only one slave drives data onto the serial output line. In such systems, the TXD lines from multiple slaves could be tied together. To operate in such a system, the `SOD` bit can be configured so that the SSI slave does not drive the `SSITx` pin. The `SOD` values are defined as follows: Value Description 0 SSI can drive `SSITx` output in Slave Output mode. 1 SSI must not drive the `SSITx` output in Slave mode.
2	MS	R/W	0	SSI Master/Slave Select This bit selects Master or Slave mode and can be modified only when SSI is disabled (`SSE=0`). The `MS` values are defined as follows: Value Description 0 Device configured as a master. 1 Device configured as a slave.

Bit/Field	Name	Type	Reset	Description
1	SSE	R/W	0	SSI Synchronous Serial Port Enable Setting this bit enables SSI operation. The SSE values are defined as follows: Value Description 0 SSI operation disabled. 1 SSI operation enabled. **Note:** This bit must be set to 0 before any control registers are reprogrammed.
0	LBM	R/W	0	SSI Loopback Mode Setting this bit enables Loopback Test mode. The LBM values are defined as follows: Value Description 0 Normal serial port operation enabled. 1 Output of the transmit serial shift register is connected internally to the input of the receive serial shift register.

Register 3: SSI Data (SSIDR), offset 0x008

Important: This register is read-sensitive. See the register description for details.

SSIDR is the data register and is 16-bits wide. When **SSIDR** is read, the entry in the receive FIFO (pointed to by the current FIFO read pointer) is accessed. As data values are removed by the SSI receive logic from the incoming data frame, they are placed into the entry in the receive FIFO (pointed to by the current FIFO write pointer).

When **SSIDR** is written to, the entry in the transmit FIFO (pointed to by the write pointer) is written to. Data values are removed from the transmit FIFO one value at a time by the transmit logic. It is loaded into the transmit serial shifter, then serially shifted out onto the `SSITx` pin at the programmed bit rate.

When a data size of less than 16 bits is selected, the user must right-justify data written to the transmit FIFO. The transmit logic ignores the unused bits. Received data less than 16 bits is automatically right-justified in the receive buffer.

When the SSI is programmed for MICROWIRE frame format, the default size for transmit data is eight bits (the most significant byte is ignored). The receive data size is controlled by the programmer. The transmit FIFO and the receive FIFO are not cleared even when the `SSE` bit in the **SSICR1** register is set to zero. This allows the software to fill the transmit FIFO before enabling the SSI.

SSI Data (SSIDR)

SSI0 base: 0x4000.8000
Offset 0x008
Type R/W, reset 0x0000.0000

	31	30	29	28	27	26	25	24	23	22	21	20	19	18	17	16
	reserved															
Type	RO	RO	RO	RO	RO	RO	RO	RO	RO	RO	RO	RO	RO	RO	RO	RO
Reset	0	0	0	0	0	0	0	0	0	0	0	0	0	0	0	0

	15	14	13	12	11	10	9	8	7	6	5	4	3	2	1	0
	DATA															
Type	R/W	R/W	R/W	R/W	R/W	R/W	R/W	R/W	R/W	R/W	R/W	R/W	R/W	R/W	R/W	R/W
Reset	0	0	0	0	0	0	0	0	0	0	0	0	0	0	0	0

Bit/Field	Name	Type	Reset	Description
31:16	reserved	RO	0x0000	Software should not rely on the value of a reserved bit. To provide compatibility with future products, the value of a reserved bit should be preserved across a read-modify-write operation.
15:0	DATA	R/W	0x0000	SSI Receive/Transmit Data A read operation reads the receive FIFO. A write operation writes the transmit FIFO. Software must right-justify data when the SSI is programmed for a data size that is less than 16 bits. Unused bits at the top are ignored by the transmit logic. The receive logic automatically right-justifies the data.

Register 4: SSI Status (SSISR), offset 0x00C

SSISR is a status register that contains bits that indicate the FIFO fill status and the SSI busy status.

SSI Status (SSISR)

SSI0 base: 0x4000.8000
Offset 0x00C
Type RO, reset 0x0000.0003

	31	30	29	28	27	26	25	24	23	22	21	20	19	18	17	16
	reserved															
Type	RO	RO	RO	RO	RO	RO	RO	RO	RO	RO	RO	RO	RO	RO	RO	RO
Reset	0	0	0	0	0	0	0	0	0	0	0	0	0	0	0	0

	15	14	13	12	11	10	9	8	7	6	5	4	3	2	1	0
	reserved											BSY	RFF	RNE	TNF	TFE
Type	RO	RO	RO	RO	RO	RO	RO	RO	RO	RO	RO	RO	RO	RO	RO	R0
Reset	0	0	0	0	0	0	0	0	0	0	0	0	0	0	1	1

Bit/Field	Name	Type	Reset	Description
31:5	reserved	RO	0x00	Software should not rely on the value of a reserved bit. To provide compatibility with future products, the value of a reserved bit should be preserved across a read-modify-write operation.
4	BSY	RO	0	SSI Busy Bit The BSY values are defined as follows: Value Description 0 SSI is idle. 1 SSI is currently transmitting and/or receiving a frame, or the transmit FIFO is not empty.
3	RFF	RO	0	SSI Receive FIFO Full The RFF values are defined as follows: Value Description 0 Receive FIFO is not full. 1 Receive FIFO is full.
2	RNE	RO	0	SSI Receive FIFO Not Empty The RNE values are defined as follows: Value Description 0 Receive FIFO is empty. 1 Receive FIFO is not empty.
1	TNF	RO	1	SSI Transmit FIFO Not Full The TNF values are defined as follows: Value Description 0 Transmit FIFO is full. 1 Transmit FIFO is not full.

Bit/Field	Name	Type	Reset	Description
0	TFE	R0	1	SSI Transmit FIFO Empty The TFE values are defined as follows: Value Description 0 Transmit FIFO is not empty. 1 Transmit FIFO is empty.

Register 5: SSI Clock Prescale (SSICPSR), offset 0x010

SSICPSR is the clock prescale register and specifies the division factor by which the system clock must be internally divided before further use.

The value programmed into this register must be an even number between 2 and 254. The least-significant bit of the programmed number is hard-coded to zero. If an odd number is written to this register, data read back from this register has the least-significant bit as zero.

SSI Clock Prescale (SSICPSR)

SSI0 base: 0x4000.8000
Offset 0x010
Type R/W, reset 0x0000.0000

	31	30	29	28	27	26	25	24	23	22	21	20	19	18	17	16
	reserved															
Type	RO	RO	RO	RO	RO	RO	RO	RO	RO	RO	RO	RO	RO	RO	RO	RO
Reset	0	0	0	0	0	0	0	0	0	0	0	0	0	0	0	0

	15	14	13	12	11	10	9	8	7	6	5	4	3	2	1	0
	reserved								CPSDVSR							
Type	RO	RO	RO	RO	RO	RO	RO	RO	R/W	R/W	R/W	R/W	R/W	R/W	R/W	R/W
Reset	0	0	0	0	0	0	0	0	0	0	0	0	0	0	0	0

Bit/Field	Name	Type	Reset	Description
31:8	reserved	RO	0x00	Software should not rely on the value of a reserved bit. To provide compatibility with future products, the value of a reserved bit should be preserved across a read-modify-write operation.
7:0	CPSDVSR	R/W	0x00	SSI Clock Prescale Divisor This value must be an even number from 2 to 254, depending on the frequency of `SSIClk`. The LSB always returns 0 on reads.

Register 6: SSI Interrupt Mask (SSIIM), offset 0x014

The **SSIIM** register is the interrupt mask set or clear register. It is a read/write register and all bits are cleared to 0 on reset.

On a read, this register gives the current value of the mask on the relevant interrupt. A write of 1 to the particular bit sets the mask, enabling the interrupt to be read. A write of 0 clears the corresponding mask.

SSI Interrupt Mask (SSIIM)

SSI0 base: 0x4000.8000
Offset 0x014
Type R/W, reset 0x0000.0000

	31	30	29	28	27	26	25	24	23	22	21	20	19	18	17	16
	reserved															
Type	RO	RO	RO	RO	RO	RO	RO	RO	RO	RO	RO	RO	RO	RO	RO	RO
Reset	0	0	0	0	0	0	0	0	0	0	0	0	0	0	0	0

	15	14	13	12	11	10	9	8	7	6	5	4	3	2	1	0
	reserved												TXIM	RXIM	RTIM	RORIM
Type	RO	RO	RO	RO	RO	RO	RO	RO	RO	RO	RO	RO	R/W	R/W	R/W	R/W
Reset	0	0	0	0	0	0	0	0	0	0	0	0	0	0	0	0

Bit/Field	Name	Type	Reset	Description
31:4	reserved	RO	0x00	Software should not rely on the value of a reserved bit. To provide compatibility with future products, the value of a reserved bit should be preserved across a read-modify-write operation.
3	TXIM	R/W	0	SSI Transmit FIFO Interrupt Mask The `TXIM` values are defined as follows: Value Description 0 TX FIFO half-empty or less condition interrupt is masked. 1 TX FIFO half-empty or less condition interrupt is not masked.
2	RXIM	R/W	0	SSI Receive FIFO Interrupt Mask The `RXIM` values are defined as follows: Value Description 0 RX FIFO half-full or more condition interrupt is masked. 1 RX FIFO half-full or more condition interrupt is not masked.
1	RTIM	R/W	0	SSI Receive Time-Out Interrupt Mask The `RTIM` values are defined as follows: Value Description 0 RX FIFO time-out interrupt is masked. 1 RX FIFO time-out interrupt is not masked.

Bit/Field	Name	Type	Reset	Description
0	RORIM	R/W	0	SSI Receive Overrun Interrupt Mask The `RORIM` values are defined as follows: Value Description 0 RX FIFO overrun interrupt is masked. 1 RX FIFO overrun interrupt is not masked.

Register 7: SSI Raw Interrupt Status (SSIRIS), offset 0x018

The **SSIRIS** register is the raw interrupt status register. On a read, this register gives the current raw status value of the corresponding interrupt prior to masking. A write has no effect.

SSI Raw Interrupt Status (SSIRIS)

SSI0 base: 0x4000.8000
Offset 0x018
Type RO, reset 0x0000.0008

	31	30	29	28	27	26	25	24	23	22	21	20	19	18	17	16
	reserved															
Type	RO	RO	RO	RO	RO	RO	RO	RO	RO	RO	RO	RO	RO	RO	RO	RO
Reset	0	0	0	0	0	0	0	0	0	0	0	0	0	0	0	0

	15	14	13	12	11	10	9	8	7	6	5	4	3	2	1	0
	reserved												TXRIS	RXRIS	RTRIS	RORRIS
Type	RO	RO	RO	RO	RO	RO	RO	RO	RO	RO	RO	RO	RO	RO	RO	RO
Reset	0	0	0	0	0	0	0	0	0	0	0	0	1	0	0	0

Bit/Field	Name	Type	Reset	Description
31:4	reserved	RO	0x00	Software should not rely on the value of a reserved bit. To provide compatibility with future products, the value of a reserved bit should be preserved across a read-modify-write operation.
3	TXRIS	RO	1	SSI Transmit FIFO Raw Interrupt Status Indicates that the transmit FIFO is half empty or less, when set.
2	RXRIS	RO	0	SSI Receive FIFO Raw Interrupt Status Indicates that the receive FIFO is half full or more, when set.
1	RTRIS	RO	0	SSI Receive Time-Out Raw Interrupt Status Indicates that the receive time-out has occurred, when set.
0	RORRIS	RO	0	SSI Receive Overrun Raw Interrupt Status Indicates that the receive FIFO has overflowed, when set.

Register 8: SSI Masked Interrupt Status (SSIMIS), offset 0x01C

The **SSIMIS** register is the masked interrupt status register. On a read, this register gives the current masked status value of the corresponding interrupt. A write has no effect.

SSI Masked Interrupt Status (SSIMIS)

SSI0 base: 0x4000.8000
Offset 0x01C
Type RO, reset 0x0000.0000

	31	30	29	28	27	26	25	24	23	22	21	20	19	18	17	16
	reserved															
Type	RO	RO	RO	RO	RO	RO	RO	RO	RO	RO	RO	RO	RO	RO	RO	RO
Reset	0	0	0	0	0	0	0	0	0	0	0	0	0	0	0	0

	15	14	13	12	11	10	9	8	7	6	5	4	3	2	1	0
	reserved												TXMIS	RXMIS	RTMIS	RORMIS
Type	RO	RO	RO	RO	RO	RO	RO	RO	RO	RO	RO	RO	RO	RO	RO	RO
Reset	0	0	0	0	0	0	0	0	0	0	0	0	0	0	0	0

Bit/Field	Name	Type	Reset	Description
31:4	reserved	RO	0	Software should not rely on the value of a reserved bit. To provide compatibility with future products, the value of a reserved bit should be preserved across a read-modify-write operation.
3	TXMIS	RO	0	SSI Transmit FIFO Masked Interrupt Status Indicates that the transmit FIFO is half empty or less, when set.
2	RXMIS	RO	0	SSI Receive FIFO Masked Interrupt Status Indicates that the receive FIFO is half full or more, when set.
1	RTMIS	RO	0	SSI Receive Time-Out Masked Interrupt Status Indicates that the receive time-out has occurred, when set.
0	RORMIS	RO	0	SSI Receive Overrun Masked Interrupt Status Indicates that the receive FIFO has overflowed, when set.

Register 9: SSI Interrupt Clear (SSIICR), offset 0x020

The **SSIICR** register is the interrupt clear register. On a write of 1, the corresponding interrupt is cleared. A write of 0 has no effect.

SSI Interrupt Clear (SSIICR)

SSI0 base: 0x4000.8000
Offset 0x020
Type W1C, reset 0x0000.0000

	31	30	29	28	27	26	25	24	23	22	21	20	19	18	17	16
	reserved															
Type	RO	RO	RO	RO	RO	RO	RO	RO	RO	RO	RO	RO	RO	RO	RO	RO
Reset	0	0	0	0	0	0	0	0	0	0	0	0	0	0	0	0

	15	14	13	12	11	10	9	8	7	6	5	4	3	2	1	0
	reserved														RTIC	RORIC
Type	RO	RO	RO	RO	RO	RO	RO	RO	RO	RO	RO	RO	RO	RO	W1C	W1C
Reset	0	0	0	0	0	0	0	0	0	0	0	0	0	0	0	0

Bit/Field	Name	Type	Reset	Description
31:2	reserved	RO	0x00	Software should not rely on the value of a reserved bit. To provide compatibility with future products, the value of a reserved bit should be preserved across a read-modify-write operation.
1	RTIC	W1C	0	SSI Receive Time-Out Interrupt Clear The `RTIC` values are defined as follows: Value Description 0 No effect on interrupt. 1 Clears interrupt.
0	RORIC	W1C	0	SSI Receive Overrun Interrupt Clear The `RORIC` values are defined as follows: Value Description 0 No effect on interrupt. 1 Clears interrupt.

Register 10: SSI DMA Control (SSIDMACTL), offset 0x024

The **SSIDMACTL** register is the DMA control register.

SSI DMA Control (SSIDMACTL)

SSI0 base: 0x4000.8000
Offset 0x024
Type R/W, reset 0x0000.0000

	31	30	29	28	27	26	25	24	23	22	21	20	19	18	17	16
	reserved															
Type	RO	RO	RO	RO	RO	RO	RO	RO	RO	RO	RO	RO	RO	RO	RO	RO
Reset	0	0	0	0	0	0	0	0	0	0	0	0	0	0	0	0

	15	14	13	12	11	10	9	8	7	6	5	4	3	2	1	0
	reserved														TXDMAE	RXDMAE
Type	RO	RO	RO	RO	RO	RO	RO	RO	RO	RO	RO	RO	RO	RO	R/W	R/W
Reset	0	0	0	0	0	0	0	0	0	0	0	0	0	0	0	0

Bit/Field	Name	Type	Reset	Description
31:2	reserved	RO	0x00	Software should not rely on the value of a reserved bit. To provide compatibility with future products, the value of a reserved bit should be preserved across a read-modify-write operation.
1	TXDMAE	R/W	0	Transmit DMA Enable If this bit is set to 1, DMA for the transmit FIFO is enabled.
0	RXDMAE	R/W	0	Receive DMA Enable If this bit is set to 1, DMA for the receive FIFO is enabled.

Register 11: SSI Peripheral Identification 4 (SSIPeriphID4), offset 0xFD0

The **SSIPeriphIDn** registers are hard-coded and the fields within the register determine the reset value.

SSI Peripheral Identification 4 (SSIPeriphID4)

SSI0 base: 0x4000.8000
Offset 0xFD0
Type RO, reset 0x0000.0000

	31	30	29	28	27	26	25	24	23	22	21	20	19	18	17	16
	reserved															
Type	RO	RO	RO	RO	RO	RO	RO	RO	RO	RO	RO	RO	RO	RO	RO	RO
Reset	0	0	0	0	0	0	0	0	0	0	0	0	0	0	0	0

	15	14	13	12	11	10	9	8	7	6	5	4	3	2	1	0
	reserved								PID4							
Type	RO	RO	RO	RO	RO	RO	RO	RO	RO	RO	RO	RO	RO	RO	RO	RO
Reset	0	0	0	0	0	0	0	0	0	0	0	0	0	0	0	0

Bit/Field	Name	Type	Reset	Description
31:8	reserved	RO	0x00	Software should not rely on the value of a reserved bit. To provide compatibility with future products, the value of a reserved bit should be preserved across a read-modify-write operation.
7:0	PID4	RO	0x00	SSI Peripheral ID Register[7:0] Can be used by software to identify the presence of this peripheral.

Register 12: SSI Peripheral Identification 5 (SSIPeriphID5), offset 0xFD4

The **SSIPeriphIDn** registers are hard-coded and the fields within the register determine the reset value.

SSI Peripheral Identification 5 (SSIPeriphID5)

SSI0 base: 0x4000.8000
Offset 0xFD4
Type RO, reset 0x0000.0000

	31	30	29	28	27	26	25	24	23	22	21	20	19	18	17	16
	reserved															
Type	RO	RO	RO	RO	RO	RO	RO	RO	RO	RO	RO	RO	RO	RO	RO	RO
Reset	0	0	0	0	0	0	0	0	0	0	0	0	0	0	0	0

	15	14	13	12	11	10	9	8	7	6	5	4	3	2	1	0
	reserved								PID5							
Type	RO	RO	RO	RO	RO	RO	RO	RO	RO	RO	RO	RO	RO	RO	RO	RO
Reset	0	0	0	0	0	0	0	0	0	0	0	0	0	0	0	0

Bit/Field	Name	Type	Reset	Description
31:8	reserved	RO	0x00	Software should not rely on the value of a reserved bit. To provide compatibility with future products, the value of a reserved bit should be preserved across a read-modify-write operation.
7:0	PID5	RO	0x00	SSI Peripheral ID Register[15:8] Can be used by software to identify the presence of this peripheral.

Register 13: SSI Peripheral Identification 6 (SSIPeriphID6), offset 0xFD8

The **SSIPeriphIDn** registers are hard-coded and the fields within the register determine the reset value.

SSI Peripheral Identification 6 (SSIPeriphID6)

SSI0 base: 0x4000.8000
Offset 0xFD8
Type RO, reset 0x0000.0000

	31	30	29	28	27	26	25	24	23	22	21	20	19	18	17	16
	reserved															
Type	RO	RO	RO	RO	RO	RO	RO	RO	RO	RO	RO	RO	RO	RO	RO	RO
Reset	0	0	0	0	0	0	0	0	0	0	0	0	0	0	0	0

	15	14	13	12	11	10	9	8	7	6	5	4	3	2	1	0
	reserved								PID6							
Type	RO	RO	RO	RO	RO	RO	RO	RO	RO	RO	RO	RO	RO	RO	RO	RO
Reset	0	0	0	0	0	0	0	0	0	0	0	0	0	0	0	0

Bit/Field	Name	Type	Reset	Description
31:8	reserved	RO	0x00	Software should not rely on the value of a reserved bit. To provide compatibility with future products, the value of a reserved bit should be preserved across a read-modify-write operation.
7:0	PID6	RO	0x00	SSI Peripheral ID Register[23:16] Can be used by software to identify the presence of this peripheral.

Register 14: SSI Peripheral Identification 7 (SSIPeriphID7), offset 0xFDC

The **SSIPeriphIDn** registers are hard-coded and the fields within the register determine the reset value.

SSI Peripheral Identification 7 (SSIPeriphID7)

SSI0 base: 0x4000.8000
Offset 0xFDC
Type RO, reset 0x0000.0000

	31	30	29	28	27	26	25	24	23	22	21	20	19	18	17	16
	reserved															
Type	RO	RO	RO	RO	RO	RO	RO	RO	RO	RO	RO	RO	RO	RO	RO	RO
Reset	0	0	0	0	0	0	0	0	0	0	0	0	0	0	0	0

	15	14	13	12	11	10	9	8	7	6	5	4	3	2	1	0
	reserved								PID7							
Type	RO	RO	RO	RO	RO	RO	RO	RO	RO	RO	RO	RO	RO	RO	RO	RO
Reset	0	0	0	0	0	0	0	0	0	0	0	0	0	0	0	0

Bit/Field	Name	Type	Reset	Description
31:8	reserved	RO	0x00	Software should not rely on the value of a reserved bit. To provide compatibility with future products, the value of a reserved bit should be preserved across a read-modify-write operation.
7:0	PID7	RO	0x00	SSI Peripheral ID Register[31:24] Can be used by software to identify the presence of this peripheral.

Register 15: SSI Peripheral Identification 0 (SSIPeriphID0), offset 0xFE0

The **SSIPeriphIDn** registers are hard-coded and the fields within the register determine the reset value.

SSI Peripheral Identification 0 (SSIPeriphID0)

SSI0 base: 0x4000.8000
Offset 0xFE0
Type RO, reset 0x0000.0022

	31	30	29	28	27	26	25	24	23	22	21	20	19	18	17	16
	reserved															
Type	RO	RO	RO	RO	RO	RO	RO	RO	RO	RO	RO	RO	RO	RO	RO	RO
Reset	0	0	0	0	0	0	0	0	0	0	0	0	0	0	0	0

	15	14	13	12	11	10	9	8	7	6	5	4	3	2	1	0
	reserved								PID0							
Type	RO	RO	RO	RO	RO	RO	RO	RO	RO	RO	RO	RO	RO	RO	RO	RO
Reset	0	0	0	0	0	0	0	0	0	0	1	0	0	0	1	0

Bit/Field	Name	Type	Reset	Description
31:8	reserved	RO	0	Software should not rely on the value of a reserved bit. To provide compatibility with future products, the value of a reserved bit should be preserved across a read-modify-write operation.
7:0	PID0	RO	0x22	SSI Peripheral ID Register[7:0] Can be used by software to identify the presence of this peripheral.

Register 16: SSI Peripheral Identification 1 (SSIPeriphID1), offset 0xFE4

The **SSIPeriphIDn** registers are hard-coded and the fields within the register determine the reset value.

SSI Peripheral Identification 1 (SSIPeriphID1)

SSI0 base: 0x4000.8000
Offset 0xFE4
Type RO, reset 0x0000.0000

	31	30	29	28	27	26	25	24	23	22	21	20	19	18	17	16
	reserved															
Type	RO	RO	RO	RO	RO	RO	RO	RO	RO	RO	RO	RO	RO	RO	RO	RO
Reset	0	0	0	0	0	0	0	0	0	0	0	0	0	0	0	0

	15	14	13	12	11	10	9	8	7	6	5	4	3	2	1	0
	reserved								PID1							
Type	RO	RO	RO	RO	RO	RO	RO	RO	RO	RO	RO	RO	RO	RO	RO	RO
Reset	0	0	0	0	0	0	0	0	0	0	0	0	0	0	0	0

Bit/Field	Name	Type	Reset	Description
31:8	reserved	RO	0x00	Software should not rely on the value of a reserved bit. To provide compatibility with future products, the value of a reserved bit should be preserved across a read-modify-write operation.
7:0	PID1	RO	0x00	SSI Peripheral ID Register [15:8] Can be used by software to identify the presence of this peripheral.

Register 17: SSI Peripheral Identification 2 (SSIPeriphID2), offset 0xFE8

The **SSIPeriphIDn** registers are hard-coded and the fields within the register determine the reset value.

SSI Peripheral Identification 2 (SSIPeriphID2)

SSI0 base: 0x4000.8000
Offset 0xFE8
Type RO, reset 0x0000.0018

	31	30	29	28	27	26	25	24	23	22	21	20	19	18	17	16
	reserved															
Type	RO	RO	RO	RO	RO	RO	RO	RO	RO	RO	RO	RO	RO	RO	RO	RO
Reset	0	0	0	0	0	0	0	0	0	0	0	0	0	0	0	0

	15	14	13	12	11	10	9	8	7	6	5	4	3	2	1	0
	reserved								PID2							
Type	RO	RO	RO	RO	RO	RO	RO	RO	RO	RO	RO	RO	RO	RO	RO	RO
Reset	0	0	0	0	0	0	0	0	0	0	0	1	1	0	0	0

Bit/Field	Name	Type	Reset	Description
31:8	reserved	RO	0x00	Software should not rely on the value of a reserved bit. To provide compatibility with future products, the value of a reserved bit should be preserved across a read-modify-write operation.
7:0	PID2	RO	0x18	SSI Peripheral ID Register [23:16] Can be used by software to identify the presence of this peripheral.

Register 18: SSI Peripheral Identification 3 (SSIPeriphID3), offset 0xFEC

The **SSIPeriphIDn** registers are hard-coded and the fields within the register determine the reset value.

SSI Peripheral Identification 3 (SSIPeriphID3)

SSI0 base: 0x4000.8000
Offset 0xFEC
Type RO, reset 0x0000.0001

	31	30	29	28	27	26	25	24	23	22	21	20	19	18	17	16
	reserved															
Type	RO	RO	RO	RO	RO	RO	RO	RO	RO	RO	RO	RO	RO	RO	RO	RO
Reset	0	0	0	0	0	0	0	0	0	0	0	0	0	0	0	0

	15	14	13	12	11	10	9	8	7	6	5	4	3	2	1	0
	reserved								PID3							
Type	RO	RO	RO	RO	RO	RO	RO	RO	RO	RO	RO	RO	RO	RO	RO	RO
Reset	0	0	0	0	0	0	0	0	0	0	0	0	0	0	0	1

Bit/Field	Name	Type	Reset	Description
31:8	reserved	RO	0x00	Software should not rely on the value of a reserved bit. To provide compatibility with future products, the value of a reserved bit should be preserved across a read-modify-write operation.
7:0	PID3	RO	0x01	SSI Peripheral ID Register [31:24] Can be used by software to identify the presence of this peripheral.

Register 19: SSI PrimeCell Identification 0 (SSIPCellID0), offset 0xFF0

The **SSIPCellIDn** registers are hard-coded, and the fields within the register determine the reset value.

SSI PrimeCell Identification 0 (SSIPCellID0)

SSI0 base: 0x4000.8000
Offset 0xFF0
Type RO, reset 0x0000.000D

	31	30	29	28	27	26	25	24	23	22	21	20	19	18	17	16
	reserved															
Type	RO	RO	RO	RO	RO	RO	RO	RO	RO	RO	RO	RO	RO	RO	RO	RO
Reset	0	0	0	0	0	0	0	0	0	0	0	0	0	0	0	0

	15	14	13	12	11	10	9	8	7	6	5	4	3	2	1	0
	reserved								CID0							
Type	RO	RO	RO	RO	RO	RO	RO	RO	RO	RO	RO	RO	RO	RO	RO	RO
Reset	0	0	0	0	0	0	0	0	0	0	0	0	1	1	0	1

Bit/Field	Name	Type	Reset	Description
31:8	reserved	RO	0x00	Software should not rely on the value of a reserved bit. To provide compatibility with future products, the value of a reserved bit should be preserved across a read-modify-write operation.
7:0	CID0	RO	0x0D	SSI PrimeCell ID Register [7:0] Provides software a standard cross-peripheral identification system.

Register 20: SSI PrimeCell Identification 1 (SSIPCellID1), offset 0xFF4

The **SSIPCellIDn** registers are hard-coded, and the fields within the register determine the reset value.

SSI PrimeCell Identification 1 (SSIPCellID1)

SSI0 base: 0x4000.8000
Offset 0xFF4
Type RO, reset 0x0000.00F0

	31	30	29	28	27	26	25	24	23	22	21	20	19	18	17	16
	reserved															
Type	RO	RO	RO	RO	RO	RO	RO	RO	RO	RO	RO	RO	RO	RO	RO	RO
Reset	0	0	0	0	0	0	0	0	0	0	0	0	0	0	0	0

	15	14	13	12	11	10	9	8	7	6	5	4	3	2	1	0
	reserved								CID1							
Type	RO	RO	RO	RO	RO	RO	RO	RO	RO	RO	RO	RO	RO	RO	RO	RO
Reset	0	0	0	0	0	0	0	0	1	1	1	1	0	0	0	0

Bit/Field	Name	Type	Reset	Description
31:8	reserved	RO	0x00	Software should not rely on the value of a reserved bit. To provide compatibility with future products, the value of a reserved bit should be preserved across a read-modify-write operation.
7:0	CID1	RO	0xF0	SSI PrimeCell ID Register [15:8] Provides software a standard cross-peripheral identification system.

Register 21: SSI PrimeCell Identification 2 (SSIPCellID2), offset 0xFF8

The **SSIPCellIDn** registers are hard-coded, and the fields within the register determine the reset value.

SSI PrimeCell Identification 2 (SSIPCellID2)

SSI0 base: 0x4000.8000
Offset 0xFF8
Type RO, reset 0x0000.0005

	31	30	29	28	27	26	25	24	23	22	21	20	19	18	17	16
	reserved															
Type	RO	RO	RO	RO	RO	RO	RO	RO	RO	RO	RO	RO	RO	RO	RO	RO
Reset	0	0	0	0	0	0	0	0	0	0	0	0	0	0	0	0

	15	14	13	12	11	10	9	8	7	6	5	4	3	2	1	0
	reserved								CID2							
Type	RO	RO	RO	RO	RO	RO	RO	RO	RO	RO	RO	RO	RO	RO	RO	RO
Reset	0	0	0	0	0	0	0	0	0	0	0	0	0	1	0	1

Bit/Field	Name	Type	Reset	Description
31:8	reserved	RO	0x00	Software should not rely on the value of a reserved bit. To provide compatibility with future products, the value of a reserved bit should be preserved across a read-modify-write operation.
7:0	CID2	RO	0x05	SSI PrimeCell ID Register [23:16] Provides software a standard cross-peripheral identification system.

Register 22: SSI PrimeCell Identification 3 (SSIPCellID3), offset 0xFFC

The **SSIPCellIDn** registers are hard-coded, and the fields within the register determine the reset value.

SSI PrimeCell Identification 3 (SSIPCellID3)

SSI0 base: 0x4000.8000
Offset 0xFFC
Type RO, reset 0x0000.00B1

	31	30	29	28	27	26	25	24	23	22	21	20	19	18	17	16
	reserved															
Type	RO	RO	RO	RO	RO	RO	RO	RO	RO	RO	RO	RO	RO	RO	RO	RO
Reset	0	0	0	0	0	0	0	0	0	0	0	0	0	0	0	0

	15	14	13	12	11	10	9	8	7	6	5	4	3	2	1	0
	reserved								CID3							
Type	RO	RO	RO	RO	RO	RO	RO	RO	RO	RO	RO	RO	RO	RO	RO	RO
Reset	0	0	0	0	0	0	0	0	1	0	1	1	0	0	0	1

Bit/Field	Name	Type	Reset	Description
31:8	reserved	RO	0x00	Software should not rely on the value of a reserved bit. To provide compatibility with future products, the value of a reserved bit should be preserved across a read-modify-write operation.
7:0	CID3	RO	0xB1	SSI PrimeCell ID Register [31:24] Provides software a standard cross-peripheral identification system.

14 Controller Area Network (CAN) Module

Controller Area Network (CAN) is a multicast, shared serial bus standard for connecting electronic control units (ECUs). CAN was specifically designed to be robust in electromagnetically-noisy environments and can utilize a differential balanced line like RS-485 or a more robust twisted-pair wire. Originally created for automotive purposes, it is also used in many embedded control applications (such as industrial and medical). Bit rates up to 1Mbps are possible at network lengths less than 40 meters. Decreased bit rates allow longer network distances (for example, 125 Kbps at 500 meters).

The Stellaris® CAN controller supports the following features:

- CAN protocol version 2.0 part A/B
- Bit rates up to 1 Mbps
- 32 message objects with individual identifier masks
- Maskable interrupt
- Disable Automatic Retransmission mode for Time-Triggered CAN (TTCAN) applications
- Programmable Loopback mode for self-test operation
- Programmable FIFO mode enables storage of multiple message objects
- Gluelessly attaches to an external CAN interface through the `CANnTX` and `CANnRX` signals

14.1 Block Diagram

Figure 14-1. CAN Controller Block Diagram

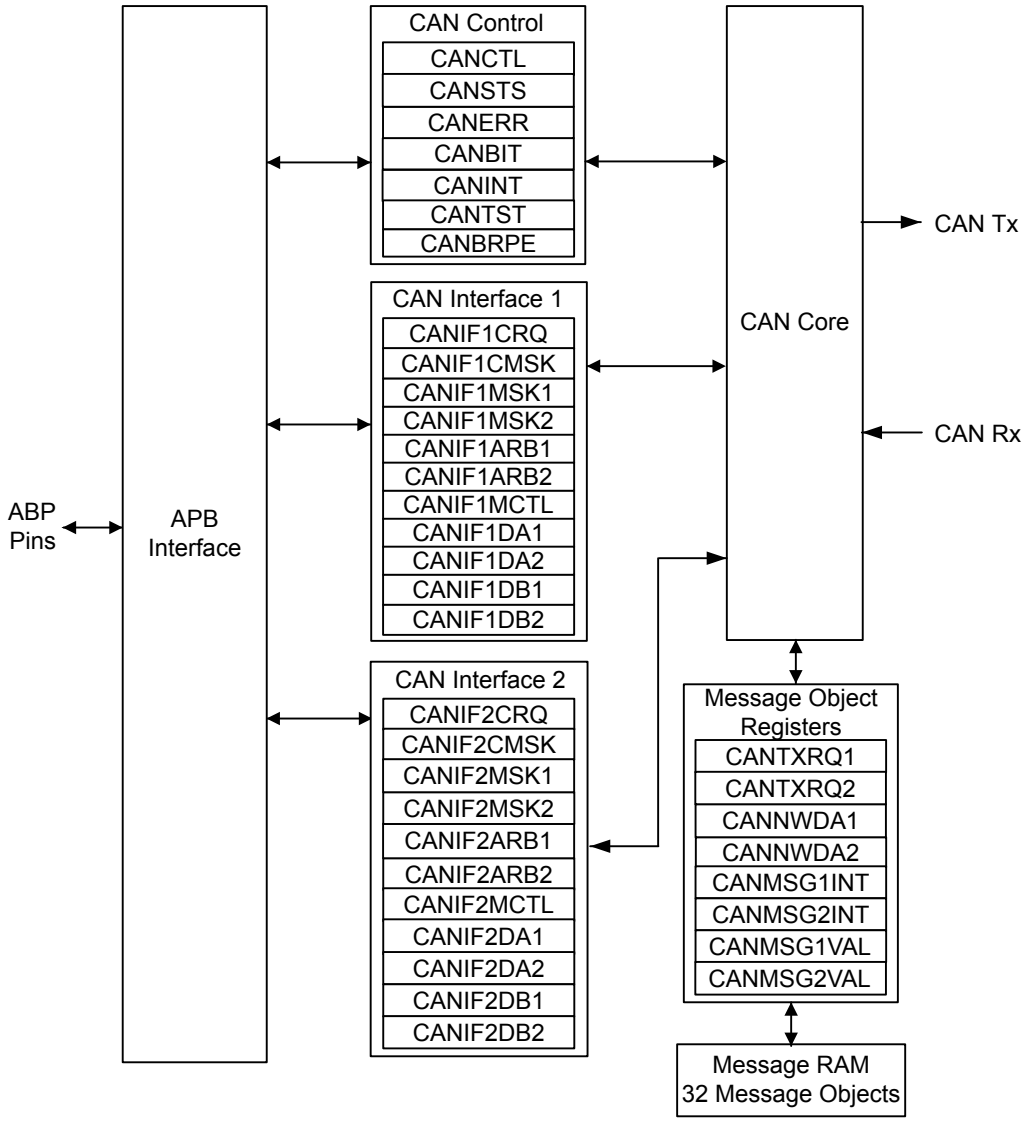

14.2 Signal Description

Table 14-1 on page 550 lists the external signals of the CAN controller and describes the function of each. The CAN controller signals are alternate functions for some GPIO signals and default to be GPIO signals at reset. The column in the table below titled "Pin Assignment" lists the possible GPIO pin placements for the CAN signals. The `AFSEL` bit in the **GPIO Alternate Function Select (GPIOAFSEL)** register (page 344) should be set to choose the CAN controller function. For more information on configuring GPIOs, see “General-Purpose Input/Outputs (GPIOs)” on page 324.

Table 14-1. Controller Area Network Signals (64LQFP)

Pin Name	Pin Number	Pin Type	Buffer Type[a]	Description
`CAN0Rx`	58	I	TTL	CAN module 0 receive.

Table 14-1. Controller Area Network Signals (64LQFP) *(continued)*

Pin Name	Pin Number	Pin Type	Buffer Type[a]	Description
CAN0Tx	57	O	TTL	CAN module 0 transmit.

a. The TTL designation indicates the pin has TTL-compatible voltage levels.

14.3 Functional Description

The Stellaris CAN controller conforms to the CAN protocol version 2.0 (parts A and B). Message transfers that include data, remote, error, and overload frames with an 11-bit identifier (standard) or a 29-bit identifier (extended) are supported. Transfer rates can be programmed up to 1 Mbps.

The CAN module consists of three major parts:

- CAN protocol controller and message handler
- Message memory
- CAN register interface

A data frame contains data for transmission, whereas a remote frame contains no data and is used to request the transmission of a specific message object. The CAN data/remote frame is constructed as shown in Figure 14-2 on page 551.

Figure 14-2. CAN Data/Remote Frame

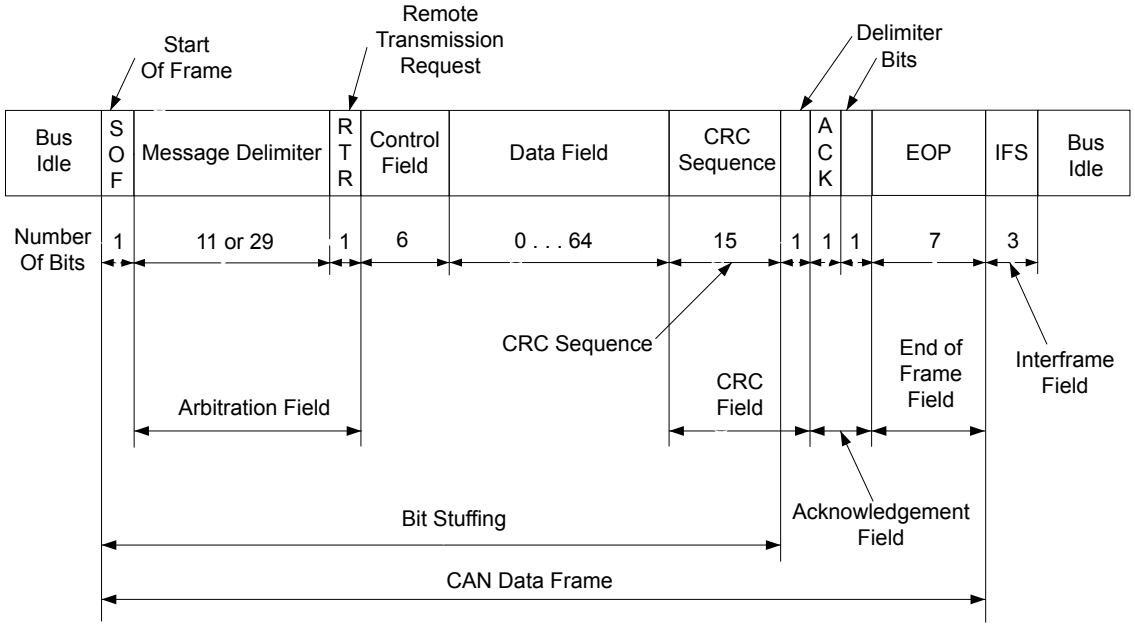

The protocol controller transfers and receives the serial data from the CAN bus and passes the data on to the message handler. The message handler then loads this information into the appropriate message object based on the current filtering and identifiers in the message object memory. The message handler is also responsible for generating interrupts based on events on the CAN bus.

The message object memory is a set of 32 identical memory blocks that hold the current configuration, status, and actual data for each message object. These are accessed via either of the CAN message object register interfaces.

The message memory is not directly accessible in the Stellaris memory map, so the Stellaris CAN controller provides an interface to communicate with the message memory via two CAN interface register sets for communicating with the message objects. As there is no direct access to the message object memory, these two interfaces must be used to read or write to each message object. The two message object interfaces allow parallel access to the CAN controller message objects when multiple objects may have new information that must be processed. In general, one interface is used for transmit data and one for receive data.

14.3.1 Initialization

Software initialization is started by setting the `INIT` bit in the **CAN Control (CANCTL)** register (with software or by a hardware reset) or by going bus-off, which occurs when the transmitter's error counter exceeds a count of 255. While `INIT` is set, all message transfers to and from the CAN bus are stopped and the `CANnTX` signal is held High. Entering the initialization state does not change the configuration of the CAN controller, the message objects, or the error counters. However, some configuration registers are only accessible while in the initialization state.

To initialize the CAN controller, set the **CAN Bit Timing (CANBIT)** register and configure each message object. If a message object is not needed, label it as not valid by clearing the `MSGVAL` bit in the **CAN IFn Arbitration 2 (CANIFnARB2)** register. Otherwise, the whole message object must be initialized, as the fields of the message object may not have valid information, causing unexpected results. Both the `INIT` and `CCE` bits in the **CANCTL** register must be set in order to access the **CANBIT** register and the **CAN Baud Rate Prescaler Extension (CANBRPE)** register to configure the bit timing. To leave the initialization state, the `INIT` bit must be cleared. Afterwards, the internal Bit Stream Processor (BSP) synchronizes itself to the data transfer on the CAN bus by waiting for the occurrence of a sequence of 11 consecutive recessive bits (indicating a bus idle condition) before it takes part in bus activities and starts message transfers. Message object initialization does not require the CAN to be in the initialization state and can be done on the fly. However, message objects should all be configured to particular identifiers or set to not valid before message transfer starts. To change the configuration of a message object during normal operation, clear the `MSGVAL` bit in the **CANIFnARB2** register to indicate that the message object is not valid during the change. When the configuration is completed, set the `MSGVAL` bit again to indicate that the message object is once again valid.

14.3.2 Operation

There are two sets of CAN Interface Registers (**CANIF1x** and **CANIF2x**), which are used to access the message objects in the Message RAM. The CAN controller coordinates transfers to and from the Message RAM to and from the registers. The two sets are independent and identical and can be used to queue transactions. Generally, one interface is used to transmit data and one is used to receive data.

Once the CAN module is initialized and the `INIT` bit in the **CANCTL** register is cleared, the CAN module synchronizes itself to the CAN bus and starts the message transfer. As each message is received, it goes through the message handler's filtering process, and if it passes through the filter, is stored in the message object specified by the `MNUM` bit in the **CAN IFn Command Request (CANIFnCRQ)** register. The whole message (including all arbitration bits, data-length code, and eight data bytes) is stored in the message object. If the Identifier Mask (the `MSK` bits in the **CAN IFn Mask 1** and **CAN IFn Mask 2 (CANIFnMSKn)** registers) is used, the arbitration bits that are masked to "don't care" may be overwritten in the message object.

The CPU may read or write each message at any time via the CAN Interface Registers. The message handler guarantees data consistency in case of concurrent accesses.

The transmission of message objects is under the control of the software that is managing the CAN hardware. These can be message objects used for one-time data transfers, or permanent message objects used to respond in a more periodic manner. Permanent message objects have all arbitration and control set up, and only the data bytes are updated. At the start of transmission, the appropriate TXRQST bit in the **CAN Transmission Request n (CANTXRQn)** register and the NEWDAT bit in the **CAN New Data n (CANNWDAn)** register are set. If several transmit messages are assigned to the same message object (when the number of message objects is not sufficient), the whole message object has to be configured before the transmission of this message is requested.

The transmission of any number of message objects may be requested at the same time; they are transmitted according to their internal priority, which is based on the message identifier (MNUM) for the message object, with 1 being the highest priority and 32 being the lowest priority. Messages may be updated or set to not valid any time, even when their requested transmission is still pending. The old data is discarded when a message is updated before its pending transmission has started. Depending on the configuration of the message object, the transmission of a message may be requested autonomously by the reception of a remote frame with a matching identifier.

Transmission can be automatically started by the reception of a matching remote frame. To enable this mode, set the RMTEN bit in the **CAN IFn Message Control (CANIFnMCTL)** register. A matching received remote frame causes the TXRQST bit to be set and the message object automatically transfers its data or generates an interrupt indicating a remote frame was requested. This can be strictly a single message identifier, or it can be a range of values specified in the message object. The CAN mask registers, **CANIFnMSKn**, configure which groups of frames are identified as remote frame requests. The UMASK bit in the **CANIFnMCTL** register enables the MSK bits in the **CANIFnMSKn** register to filter which frames are identified as a remote frame request. The MXTD bit in the **CANIFnMSK2** register should be set if a remote frame request is expected to be triggered by 29-bit extended identifiers.

14.3.3 Transmitting Message Objects

If the internal transmit shift register of the CAN module is ready for loading, and if there is no data transfer occurring between the CAN Interface Registers and message RAM, the valid message object with the highest priority that has a pending transmission request is loaded into the transmit shift register by the message handler and the transmission is started. The message object's NEWDAT bit in the **CANNWDAn** register is cleared. After a successful transmission, and if no new data was written to the message object since the start of the transmission, the TXRQST bit in the **CANTXRQn** register is cleared. If the CAN controller is set up to interrupt upon a successful transmission of a message object, (the TXIE bit in the **CAN IFn Message Control (CANIFnMCTL)** register is set), the INTPND bit in the **CANIFnMCTL** register is set after a successful transmission. If the CAN module has lost the arbitration or if an error occurred during the transmission, the message is re-transmitted as soon as the CAN bus is free again. If, meanwhile, the transmission of a message with higher priority has been requested, the messages are transmitted in the order of their priority.

14.3.4 Configuring a Transmit Message Object

The following steps illustrate how to configure a transmit message object.

1. In the **CAN IFn Command Mask (CANIFnCMASK)** register:
   - Set the WRNRD bit to specify a write to the **CANIFnCMASK** register; specify whether to transfer the IDMASK, DIR, and MXTD of the message object into the **CAN IFn** registers using the MASK bit
   - Specify whether to transfer the ID, DIR, XTD, and MSGVAL of the message object into the interface registers using the ARB bit

- Specify whether to transfer the control bits into the interface registers using the CONTROL bit
- Specify whether to clear the INTPND bit in the **CANIFnMCTL** register using the CLRINTPND bit
- Specify whether to clear the NEWDAT bit in the **CANNWDAn** register using the NEWDAT bit
- Specify which bits to transfer using the DATAA and DATAB bits

2. In the **CANIFnMSK1** register, use the MSK[15:0] bits to specify which of the bits in the 29-bit or 11-bit message identifier are used for acceptance filtering. Note that MSK[15:0] in this register are used for bits [15:0] of the 29-bit message identifier and are not used for an 11-bit identifier. A value of 0x00 enables all messages to pass through the acceptance filtering. Also note that in order for these bits to be used for acceptance filtering, they must be enabled by setting the UMASK bit in the **CANIFnMCTL** register.
3. In the **CANIFnMSK2** register, use the MSK[12:0] bits to specify which of the bits in the 29-bit or 11-bit message identifier are used for acceptance filtering. Note that MSK[12:0] are used for bits [28:16] of the 29-bit message identifier; whereas MSK[12:2] are used for bits [10:0] of the 11-bit message identifier. Use the MXTD and MDIR bits to specify whether to use XTD and DIR for acceptance filtering. A value of 0x00 enables all messages to pass through the acceptance filtering. Also note that in order for these bits to be used for acceptance filtering, they must be enabled by setting the UMASK bit in the **CANIFnMCTL** register.
4. For a 29-bit identifier, configure ID[15:0] in the **CANIFnARB1** register to are used for bits [15:0] of the message identifier and ID[12:0] in the **CANIFnARB2** register to are used for bits [28:16] of the message identifier. Set the XTD bit to indicate an extended identifier; set the DIR bit to indicate transmit; and set the MSGVAL bit to indicate that the message object is valid.
5. For an 11-bit identifier, disregard the **CANIFnARB1** register and configure ID[12:2] in the **CANIFnARB2** register to are used for bits [10:0] of the message identifier. Clear the XTD bit to indicate a standard identifier; set the DIR bit to indicate transmit; and set the MSGVAL bit to indicate that the message object is valid.
6. In the **CANIFnMCTL** register:
   - Optionally set the UMASK bit to enable the mask (MSK, MXTD, and MDIR specified in the **CANIFnMSK1** and **CANIFnMSK2** registers) for acceptance filtering
   - Optionally set the TXIE bit to enable the INTPND bit to be set after a successful transmission
   - Optionally set the RMTEN bit to enable the TXRQST bit to be set upon the reception of a matching remote frame allowing automatic transmission
   - Set the EOB bit for a single message object;
   - Set the DLC[3:0] field to specify the size of the data frame. Take care during this configuration not to set the NEWDAT, MSGLST, INTPND or TXRQST bits.
7. Load the data to be transmitted into the CAN IFn Data **(CANIFnDA1, CANIFnDA2, CANIFnDB1, CANIFnDB2)** or **(CANIFnDATAA and CANIFnDATAB)** registers. Byte 0 of the CAN data frame is stored in DATA[7:0] in the **CANIFnDA1** register.

8. Program the number of the message object to be transmitted in the MNUM field in the **CAN IFn Command Request (CANIFnCRQ)** register.

9. When everything is properly configured, set the TXRQST bit in the **CANIFnMCTL** register. Once this bit is set, the message object is available to be transmitted, depending on priority and bus availability. Note that setting the RMTEN bit in the **CANIFnMCTL** register can also start message transmission if a matching remote frame has been received.

14.3.5 Updating a Transmit Message Object

The CPU may update the data bytes of a Transmit Message Object any time via the CAN Interface Registers and neither the MSGVAL bit in the **CANIFnARB2** register nor the TXRQST bits in the **CANIFnMCTL** register have to be cleared before the update.

Even if only some of the data bytes are to be updated, all four bytes of the corresponding **CANIFnDAn**/**CANIFnDBn** register have to be valid before the content of that register is transferred to the message object. Either the CPU must write all four bytes into the **CANIFnDAn**/**CANIFnDBn** register or the message object is transferred to the **CANIFnDAn**/**CANIFnDBn** register before the CPU writes the new data bytes.

In order to only update the data in a message object, the WRNRD, DATAA and DATAB bits in the **CANIFnMSKn** register are set, followed by writing the updated data into **CANIFnDA1**, **CANIFnDA2**, **CANIFnDB1**, and **CANIFnDB2** registers, and then the number of the message object is written to the MNUM field in the **CAN IFn Command Request (CANIFnCRQ)** register. To begin transmission of the new data as soon as possible, set the TXRQST bit in the **CANIFnMSKn** register.

To prevent the clearing of the TXRQST bit in the **CANIFnMCTL** register at the end of a transmission that may already be in progress while the data is updated, the NEWDAT and TXRQST bits have to be set at the same time in the **CANIFnMCTL** register. When these bits are set at the same time, NEWDAT is cleared as soon as the new transmission has started.

14.3.6 Accepting Received Message Objects

When the arbitration and control field (the ID and XTD bits in the **CANIFnARB2** and the RMTEN and DLC[3:0] bits of the **CANIFnMCTL** register) of an incoming message is completely shifted into the CAN controller, the message handling capability of the controller starts scanning the message RAM for a matching valid message object. To scan the message RAM for a matching message object, the controller uses the acceptance filtering programmed through the mask bits in the **CANIFnMSKn** register and enabled using the UMASK bit in the **CANIFnMCTL** register. Each valid message object, starting with object 1, is compared with the incoming message to locate a matching message object in the message RAM. If a match occurs, the scanning is stopped and the message handler proceeds depending on whether it is a data frame or remote frame that was received.

14.3.7 Receiving a Data Frame

The message handler stores the message from the CAN controller receive shift register into the matching message object in the message RAM. The data bytes, all arbitration bits, and the DLC bits are all stored into the corresponding message object. In this manner, the data bytes are connected with the identifier even if arbitration masks are used. The NEWDAT bit of the **CANIFnMCTL** register is set to indicate that new data has been received. The CPU should clear this bit when it reads the message object to indicate to the controller that the message has been received, and the buffer is free to receive more messages. If the CAN controller receives a message and the NEWDAT bit is already set, the MSGLST bit in the **CANIFnMCTL** register is set to indicate that the previous data was lost. If the system requires an interrupt upon successful reception of a frame, the RXIE bit of the **CANIFnMCTL** register should be set. In this case, the INTPND bit of the same register is set,

causing the **CANINT** register to point to the message object that just received a message. The TXRQST bit of this message object should be cleared to prevent the transmission of a remote frame.

14.3.8 Receiving a Remote Frame

A remote frame contains no data, but instead specifies which object should be transmitted. When a remote frame is received, three different configurations of the matching message object have to be considered:

Configuration in CANIFnMCTL	Description
■ DIR = 1 (direction = transmit); programmed in the **CANIFnARB2** register ■ RMTEN = 1 (set the TXRQST bit of the **CANIFnMCTL** register at reception of the frame to enable transmission) ■ UMASK = 1 or 0	At the reception of a matching remote frame, the TXRQST bit of this message object is set. The rest of the message object remains unchanged, and the controller automatically transfers the data in the message object as soon as possible.
■ DIR = 1 (direction = transmit); programmed in the **CANIFnARB2** register ■ RMTEN = 0 (do not change the TXRQST bit of the **CANIFnMCTL** register at reception of the frame) ■ UMASK = 0 (ignore mask in the **CANIFnMSKn** register)	At the reception of a matching remote frame, the TXRQST bit of this message object remains unchanged, and the remote frame is ignored. This remote frame is disabled, the data is not transferred and there is no indication that the remote frame ever happened.
■ DIR = 1 (direction = transmit); programmed in the **CANIFnARB2** register ■ RMTEN = 0 (do not change the TXRQST bit of the **CANIFnMCTL** register at reception of the frame) ■ UMASK = 1 (use mask (MSK, MXTD, and MDIR in the **CANIFnMSKn** register) for acceptance filtering)	At the reception of a matching remote frame, the TXRQST bit of this message object is cleared. The arbitration and control field (ID + XTD + RMTEN + DLC) from the shift register is stored into the message object in the message RAM and the NEWDAT bit of this message object is set. The data field of the message object remains unchanged; the remote frame is treated similar to a received data frame. This is useful for a remote data request from another CAN device for which the Stellaris controller does not have readily available data. The software must fill the data and answer the frame manually.

14.3.9 Receive/Transmit Priority

The receive/transmit priority for the message objects is controlled by the message number. Message object 1 has the highest priority, while message object 32 has the lowest priority. If more than one transmission request is pending, the message objects are transmitted in order based on the message object with the lowest message number. This should not be confused with the message identifier as that priority is enforced by the CAN bus. This means that if message object 1 and message object 2 both have valid messages that need to be transmitted, message object 1 will always be transmitted first regardless of the message identifier in the message object itself.

14.3.10 Configuring a Receive Message Object

The following steps illustrate how to configure a receive message object.

1. Program the **CAN IFn Command Mask (CANIFnCMASK)** register as described in the “Configuring a Transmit Message Object” on page 553 section, except that the WRNRD bit is set to specify a write to the message RAM.

2. Program the **CANIFnMSK1**and **CANIFnMSK2** registers as described in the “Configuring a Transmit Message Object” on page 553 section to configure which bits are used for acceptance

filtering. Note that in order for these bits to be used for acceptance filtering, they must be enabled by setting the UMASK bit in the **CANIFnMCTL** register.

3. In the **CANIFnMSK2** register, use the MSK[12:0] bits to specify which of the bits in the 29-bit or 11-bit message identifier are used for acceptance filtering. Note that MSK[12:0] are used for bits [28:16] of the 29-bit message identifier; whereas MSK[12:2] are used for bits [10:0] of the 11-bit message identifier. Use the MXTD and MDIR bits to specify whether to use XTD and DIR for acceptance filtering. A value of 0x00 enables all messages to pass through the acceptance filtering. Also note that in order for these bits to be used for acceptance filtering, they must be enabled by setting the UMASK bit in the **CANIFnMCTL** register.

4. Program the **CANIFnARB1** and **CANIFnARB2** registers as described in the "Configuring a Transmit Message Object" on page 553 section to program XTD and ID bits for the message identifier to be received; set the MSGVAL bit to indicate a valid message; and clear the DIR bit to specify receive.

5. In the **CANIFnMCTL** register:

   - Optionally set the UMASK bit to enable the mask (MSK, MXTD, and MDIR specified in the **CANIFnMSK1** and **CANIFnMSK2** registers) for acceptance filtering
   - Optionally set the RXIE bit to enable the INTPND bit to be set after a successful reception
   - Clear the RMTEN bit to leave the TXRQST bit unchanged
   - Set the EOB bit for a single message object
   - Set the DLC[3:0] field to specify the size of the data frame

   Take care during this configuration not to set the NEWDAT, MSGLST, INTPND or TXRQST bits.

6. Program the number of the message object to be received in the MNUM field in the **CAN IFn Command Request (CANIFnCRQ)** register. Reception of the message object begins as soon as a matching frame is available on the CAN bus.

When the message handler stores a data frame in the message object, it stores the received Data Length Code and eight data bytes in the **CANIFnDA1**, **CANIFnDA2**, **CANIFnDB1**, and **CANIFnDB2** register. Byte 0 of the CAN data frame is stored in DATA[7:0] in the **CANIFnDA1** register. If the Data Length Code is less than 8, the remaining bytes of the message object are overwritten by unspecified values.

The CAN mask registers can be used to allow groups of data frames to be received by a message object. The CAN mask registers, **CANIFnMSKn**, configure which groups of frames are received by a message object. The UMASK bit in the **CANIFnMCTL** register enables the MSK bits in the **CANIFnMSKn** register to filter which frames are received. The MXTD bit in the **CANIFnMSK2** register should be set if only 29-bit extended identifiers are expected by this message object.

14.3.11 Handling of Received Message Objects

The CPU may read a received message any time via the CAN Interface registers because the data consistency is guaranteed by the message handler state machine.

Typically, the CPU first writes 0x007F to the **CANIFnCMSK** register and then writes the number of the message object to the **CANIFnCRQ** register. That combination transfers the whole received message from the message RAM into the Message Buffer registers (**CANIFnMSKn**, **CANIFnARBn**, and **CANIFnMCTL**). Additionally, the NEWDAT and INTPND bits are cleared in the message RAM,

acknowledging that the message has been read and clearing the pending interrupt generated by this message object.

If the message object uses masks for acceptance filtering, the **CANIFnARBn** registers show the full, unmasked ID for the received message.

The NEWDAT bit in the **CANIFnMCTL** register shows whether a new message has been received since the last time this message object was read. The MSGLST bit in the **CANIFnMCTL** register shows whether more than one message has been received since the last time this message object was read. MSGLST is not automatically cleared, and should be cleared by software after reading its status.

Using a remote frame, the CPU may request new data from another CAN node on the CAN bus. Setting the TXRQST bit of a receive object causes the transmission of a remote frame with the receive object's identifier. This remote frame triggers the other CAN node to start the transmission of the matching data frame. If the matching data frame is received before the remote frame could be transmitted, the TXRQST bit is automatically reset. This prevents the possible loss of data when the other device on the CAN bus has already transmitted the data slightly earlier than expected.

14.3.11.1 Configuration of a FIFO Buffer

With the exception of the EOB bit in the **CANIFnMCTL** register, the configuration of receive message objects belonging to a FIFO buffer is the same as the configuration of a single receive message object (see “Configuring a Receive Message Object” on page 556). To concatenate two or more message objects into a FIFO buffer, the identifiers and masks (if used) of these message objects have to be programmed to matching values. Due to the implicit priority of the message objects, the message object with the lowest message object number is the first message object in a FIFO buffer. The EOB bit of all message objects of a FIFO buffer except the last one must be cleared. The EOB bit of the last message object of a FIFO buffer is set, indicating it is the last entry in the buffer.

14.3.11.2 Reception of Messages with FIFO Buffers

Received messages with identifiers matching to a FIFO buffer are stored starting with the message object with the lowest message number. When a message is stored into a message object of a FIFO buffer, the NEWDAT of the **CANIFnMCTL** register bit of this message object is set. By setting NEWDAT while EOB is clear, the message object is locked and cannot be written to by the message handler until the CPU has cleared the NEWDAT bit. Messages are stored into a FIFO buffer until the last message object of this FIFO buffer is reached. If none of the preceding message objects has been released by clearing the NEWDAT bit, all further messages for this FIFO buffer will be written into the last message object of the FIFO buffer and therefore overwrite previous messages.

14.3.11.3 Reading from a FIFO Buffer

When the CPU transfers the contents of a message object from a FIFO buffer by writing its number to the **CANIFnCRQ**, the TXRQST and CLRINTPND bits in the **CANIFnCMSK** register should be set such that the NEWDAT and INTPEND bits in the **CANIFnMCTL** register are cleared after the read. The values of these bits in the **CANIFnMCTL** register always reflect the status of the message object before the bits are cleared. To assure the correct function of a FIFO buffer, the CPU should read out the message objects starting with the message object with the lowest message number. When reading from the FIFO buffer, the user should be aware that a new received message is placed in the message object with the lowest message number for which the NEWDAT bit of the **CANIFnMCTL** register. As a result, the order of the received messages in the FIFO is not guaranteed. Figure 14-3 on page 559 shows how a set of message objects which are concatenated to a FIFO Buffer can be handled by the CPU.

Figure 14-3. Message Objects in a FIFO Buffer

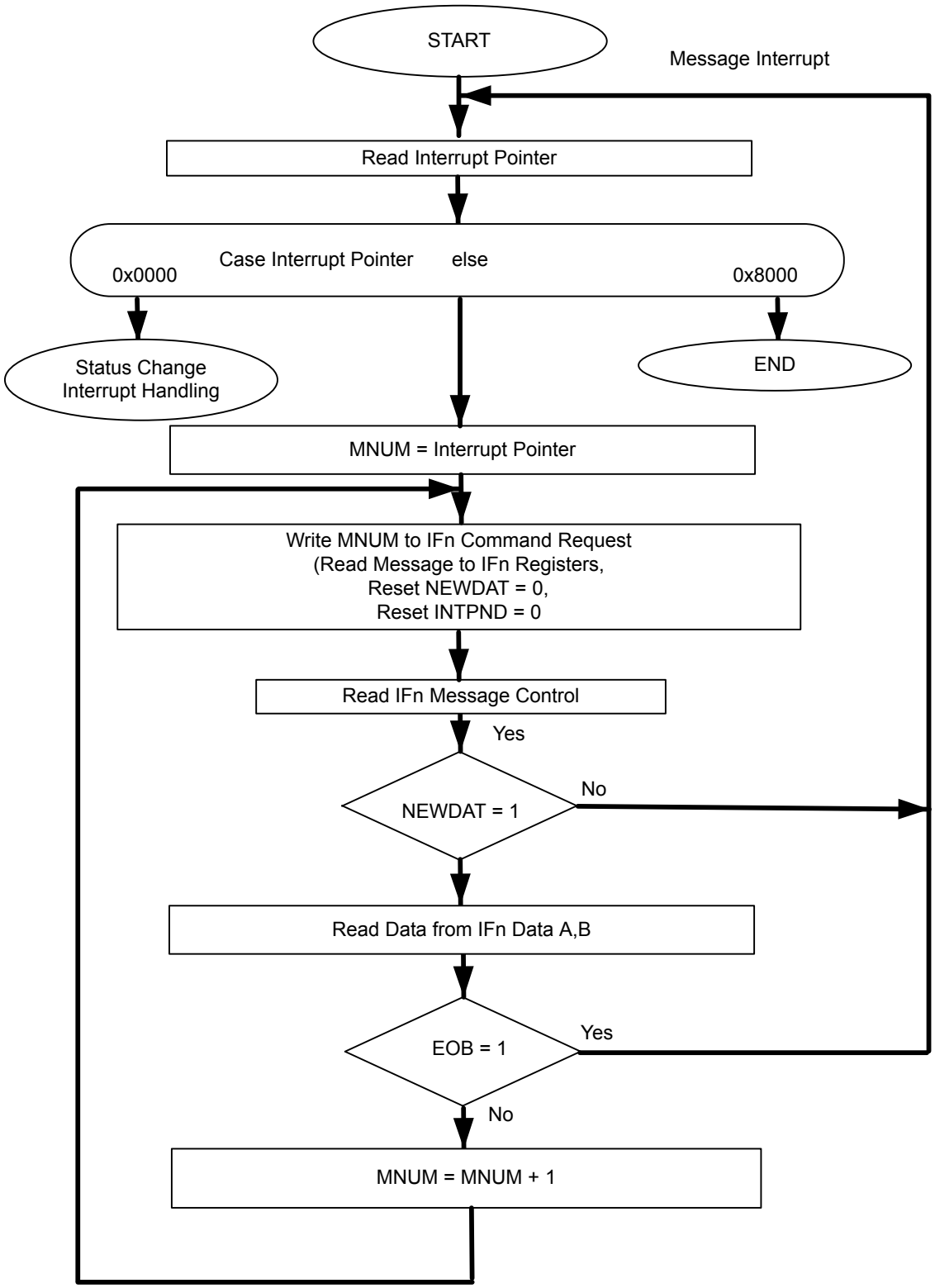

14.3.12 Handling of Interrupts

If several interrupts are pending, the **CAN Interrupt (CANINT)** register points to the pending interrupt with the highest priority, disregarding their chronological order. The status interrupt has the highest priority. Among the message interrupts, the message object's interrupt with the lowest message number has the highest priority. A message interrupt is cleared by clearing the message object's `INTPND` bit in the **CANIFnMCTL** register or by reading the **CAN Status (CANSTS)** register. The status Interrupt is cleared by reading the **CANSTS** register.

The interrupt identifier `INTID` in the **CANINT** register indicates the cause of the interrupt. When no interrupt is pending, the register reads as 0x0000. If the value of the `INTID` field is different from 0, then there is an interrupt pending. If the `IE` bit is set in the **CANCTL** register, the interrupt line to the CPU is active. The interrupt line remains active until the `INTID` field is 0, meaning that all interrupt sources have been cleared (the cause of the interrupt is reset), or until `IE` is cleared, which disables interrupts from the CAN controller.

The `INTID` field of the **CANINT** register points to the pending message interrupt with the highest interrupt priority. The `SIE` bit in the **CANCTL** register controls whether a change of the `RXOK`, `TXOK`, and `LEC` bits in the **CANSTS** register can cause an interrupt. The `EIE` bit in the **CANCTL**register controls whether a change of the `BOFF` and `EWARN` bits in the **CANSTS** can cause an interrupt. The `IE` bit in the **CANCTL** controls whether any interrupt from the CAN controller actually generates an interrupt to the microcontroller's interrupt controller. The **CANINT** register is updated even when the `IE` bit in the **CANCTL** register is clear, but the interrupt will not be indicated to the CPU.

A value of 0x8000 in the **CANINT** register indicates that an interrupt is pending because the CAN module has updated, but not necessarily changed, the **CANSTS** , indicating that either an error or status interrupt has been generated. A write access to the **CANSTS** register can clear the `RXOK`, `TXOK`, and `LEC` bits in that same register; however, the only way to clear the source of a status interrupt is to read the **CANSTS** register.

There are two ways to determine the source of an interrupt during interrupt handling. The first is to read the `INTID` bit in the **CANINT** register to determine the highest priority interrupt that is pending, and the second is to read the **CAN Message Interrupt Pending (CANMSGnINT)** register to see all of the message objects that have pending interrupts.

An interrupt service routine reading the message that is the source of the interrupt may read the message and clear the message object's `INTPND` bit at the same time by setting the `CLRINTPND` bit in the **CANIFnCMSK** register. Once the `INTPND` bit has been cleared, the **CANINT** register contains the message number for the next message object with a pending interrupt.

14.3.13 Test Mode

A Test Mode is provided, which allows various diagnostics to be performed. Test Mode is entered by setting the `TEST` bit **CANCTL** register. Once in Test Mode, the `TX[1:0]`, `LBACK`, `SILENT` and `BASIC` bits in the **CAN Test (CANTST)** register can be used to put the CAN controller into the various diagnostic modes. The `RX` bit in the **CANTST** register allows monitoring of the `CANnRX` signal. All **CANTST** register functions are disabled when the `TEST` bit is cleared.

14.3.13.1 Silent Mode

Silent Mode can be used to analyze the traffic on a CAN bus without affecting it by the transmission of dominant bits (Acknowledge Bits, Error Frames). The CAN Controller is put in Silent Mode setting the `SILENT` bit in the **CANTST** register. In Silent Mode, the CAN controller is able to receive valid data frames and valid remote frames, but it sends only recessive bits on the CAN bus and it cannot start a transmission. If the CAN Controller is required to send a dominant bit (ACK bit, overload flag,

or active error flag), the bit is rerouted internally so that the CAN Controller monitors this dominant bit, although the CAN bus remains in recessive state.

14.3.13.2 Loopback Mode

Loopback mode is useful for self-test functions. In Loopback Mode, the CAN Controller internally routes the CANnTX signal on to the CANnRX signal and treats its own transmitted messages as received messages and stores them (if they pass acceptance filtering) into the message buffer. The CAN Controller is put in Loopback Mode by setting the LBACK bit in the **CANTST** register. To be independent from external stimulation, the CAN Controller ignores acknowledge errors (a recessive bit sampled in the acknowledge slot of a data/remote frame) in Loopback Mode. The actual value of the CANnRX signal is disregarded by the CAN Controller. The transmitted messages can be monitored on the CANnTX signal.

14.3.13.3 Loopback Combined with Silent Mode

Loopback Mode and Silent Mode can be combined to allow the CAN Controller to be tested without affecting a running CAN system connected to the CANnTX and CANnRX signals. In this mode, the CANnRX signal is disconnected from the CAN Controller and the CANnTX signal is held recessive. This mode is enabled by setting both the LBACK and SILENT bits in the **CANTST** register.

14.3.13.4 Basic Mode

Basic Mode allows the CAN Controller to be operated without the Message RAM. In Basic Mode, The CANIF1 registers are used as the transmit buffer. The transmission of the contents of the IF1 registers is requested by setting the BUSY bit of the **CANIF1CRQ** register. The CANIF1 registers are locked while the BUSY bit is set. The BUSY bit indicates that a transmission is pending. As soon the CAN bus is idle, the CANIF1 registers are loaded into the shift register of the CAN Controller and transmission is started. When the transmission has completed, the BUSY bit is cleared and the locked CANIF1 registers are released. A pending transmission can be aborted at any time by clearing the BUSY bit in the **CANIF1CRQ** register while the CANIF1 registers are locked. If the CPU has cleared the BUSY bit, a possible retransmission in case of lost arbitration or an error is disabled.

The CANIF2 Registers are used as a receive buffer. After the reception of a message, the contents of the shift register is stored into the CANIF2 registers, without any acceptance filtering. Additionally, the actual contents of the shift register can be monitored during the message transfer. Each time a read message object is initiated by setting the BUSY bit of the **CANIF2CRQ** register, the contents of the shift register are stored into the CANIF2 registers.

In Basic Mode, all message-object-related control and status bits and of the control bits of the **CANIFnCMSK** registers are not evaluated. The message number of the **CANIFnCRQ** registers is also not evaluated. In the **CANIF2MCTL** register, the NEWDAT and MSGLST bits retain their function, the DLC[3:0] field shows the received DLC, the other control bits are cleared.

Basic Mode is enabled by setting the BASIC bit in the **CANTST** register.

14.3.13.5 Transmit Control

Software can directly override control of the CANnTX signal in four different ways.

- CANnTX is controlled by the CAN Controller
- The sample point is driven on the CANnTX signal to monitor the bit timing
- CANnTX drives a low value

- CANnTX drives a high value

The last two functions, combined with the readable CAN receive pin CANnRX, can be used to check the physical layer of the CAN bus.

The Transmit Control function is enabled by programming the TX[1:0] field in the **CANTST** register. The three test functions for the CANnTX signal interfere with all CAN protocol functions. TX[1:0] must be cleared when CAN message transfer or Loopback Mode, Silent Mode, or Basic Mode are selected.

14.3.14 Bit Timing Configuration Error Considerations

Even if minor errors in the configuration of the CAN bit timing do not result in immediate failure, the performance of a CAN network can be reduced significantly. In many cases, the CAN bit synchronization amends a faulty configuration of the CAN bit timing to such a degree that only occasionally an error frame is generated. In the case of arbitration, however, when two or more CAN nodes simultaneously try to transmit a frame, a misplaced sample point may cause one of the transmitters to become error passive. The analysis of such sporadic errors requires a detailed knowledge of the CAN bit synchronization inside a CAN node and of the CAN nodes' interaction on the CAN bus.

14.3.15 Bit Time and Bit Rate

The CAN system supports bit rates in the range of lower than 1 Kbps up to 1000 Kbps. Each member of the CAN network has its own clock generator. The timing parameter of the bit time can be configured individually for each CAN node, creating a common bit rate even though the CAN nodes' oscillator periods may be different.

Because of small variations in frequency caused by changes in temperature or voltage and by deteriorating components, these oscillators are not absolutely stable. As long as the variations remain inside a specific oscillator's tolerance range, the CAN nodes are able to compensate for the different bit rates by periodically resynchronizing to the bit stream.

According to the CAN specification, the bit time is divided into four segments (see Figure 14-4 on page 563): the Synchronization Segment, the Propagation Time Segment, the Phase Buffer Segment 1, and the Phase Buffer Segment 2. Each segment consists of a specific, programmable number of time quanta (see Table 14-2 on page 563). The length of the time quantum (t_q), which is the basic time unit of the bit time, is defined by the CAN controller's input clock (fsys) and the Baud Rate Prescaler (BRP):

t_q = BRP / fsys

The fsys input clock is the system clock frequency as configured by the **RCC** or **RCC2** registers (see page 189 or page 196).

The Synchronization Segment Sync is that part of the bit time where edges of the CAN bus level are expected to occur; the distance between an edge that occurs outside of Sync and the Sync is called the phase error of that edge.

The Propagation Time Segment Prop is intended to compensate for the physical delay times within the CAN network.

The Phase Buffer Segments Phase1 and Phase2 surround the Sample Point.

The (Re-)Synchronization Jump Width (SJW) defines how far a resynchronization may move the Sample Point inside the limits defined by the Phase Buffer Segments to compensate for edge phase errors.

A given bit rate may be met by different bit-time configurations, but for the proper function of the CAN network, the physical delay times and the oscillator's tolerance range have to be considered.

Figure 14-4. CAN Bit Time

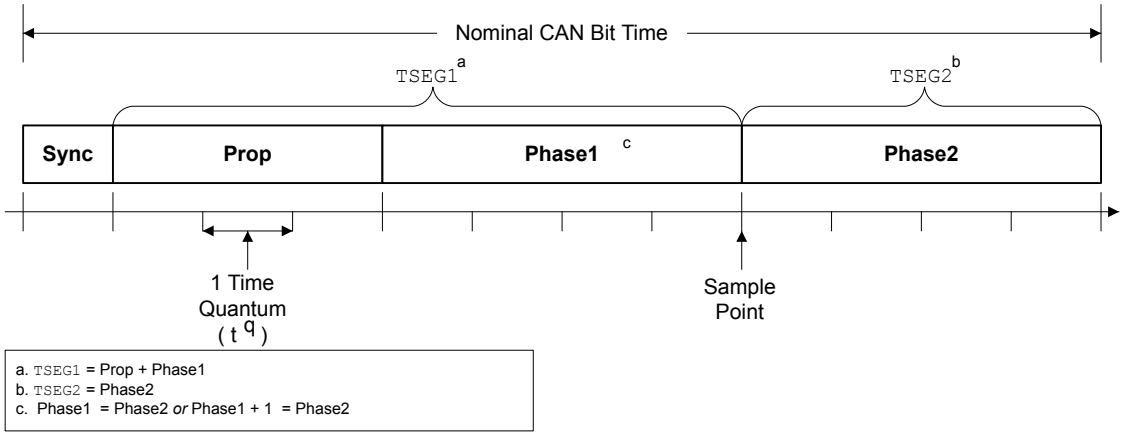

Table 14-2. CAN Protocol Ranges[a]

Parameter	Range	Remark
BRP	[1 .. 64]	Defines the length of the time quantum t_q. The **CANBRPE** register can be used to extend the range to 1024.
Sync	1 t_q	Fixed length, synchronization of bus input to system clock
Prop	[1 .. 8] t_q	Compensates for the physical delay times
Phase1	[1 .. 8] t_q	May be lengthened temporarily by synchronization
Phase2	[1 .. 8] t_q	May be shortened temporarily by synchronization
SJW	[1 .. 4] t_q	May not be longer than either Phase Buffer Segment

a. This table describes the minimum programmable ranges required by the CAN protocol.

The bit timing configuration is programmed in two register bytes in the **CANBIT** register. In the **CANBIT** register, the four components TSEG2, TSEG1, SJW, and BRP have to be programmed to a numerical value that is one less than its functional value; so instead of values in the range of [1..n], values in the range of [0..n-1] are programmed. That way, for example, SJW (functional range of [1..4]) is represented by only two bits in the SJW bit field. Table 14-3 shows the relationship between the **CANBIT** register values and the parameters.

Table 14-3. CANBIT Register Values

CANBIT Register Field	Setting
TSEG2	Phase2 - 1
TSEG1	Prop + Phase1 - 1
SJW	SJW - 1
BRP	BRP

Therefore, the length of the bit time is (programmed values):

[TSEG1 + TSEG2 + 3] × t_q

or (functional values):

[Sync + Prop + Phase1 + Phase2] × t_q

The data in the **CANBIT** register is the configuration input of the CAN protocol controller. The baud rate prescaler (configured by the `BRP` field) defines the length of the time quantum, the basic time unit of the bit time; the bit timing logic (configured by `TSEG1`, `TSEG2`, and `SJW`) defines the number of time quanta in the bit time.

The processing of the bit time, the calculation of the position of the sample point, and occasional synchronizations are controlled by the CAN controller and are evaluated once per time quantum.

The CAN controller translates messages to and from frames. In addition, the controller generates and discards the enclosing fixed format bits, inserts and extracts stuff bits, calculates and checks the CRC code, performs the error management, and decides which type of synchronization is to be used. The bit value is received or transmitted at the sample point. The information processing time (IPT) is the time after the sample point needed to calculate the next bit to be transmitted on the CAN bus. The IPT includes any of the following: retrieving the next data bit, handling a CRC bit, determining if bit stuffing is required, generating an error flag or simply going idle.

The IPT is application-specific but may not be longer than 2 t_q; the CAN's IPT is 0 t_q. Its length is the lower limit of the programmed length of Phase2. In case of synchronization, Phase2 may be shortened to a value less than IPT, which does not affect bus timing.

14.3.16 Calculating the Bit Timing Parameters

Usually, the calculation of the bit timing configuration starts with a required bit rate or bit time. The resulting bit time (1/bit rate) must be an integer multiple of the system clock period.

The bit time may consist of 4 to 25 time quanta. Several combinations may lead to the required bit time, allowing iterations of the following steps.

The first part of the bit time to be defined is Prop. Its length depends on the delay times measured in the system. A maximum bus length as well as a maximum node delay has to be defined for expandable CAN bus systems. The resulting time for Prop is converted into time quanta (rounded up to the nearest integer multiple of t_q).

Sync is 1 t_q long (fixed), which leaves (bit time - Prop - 1) t_q for the two Phase Buffer Segments. If the number of remaining t_q is even, the Phase Buffer Segments have the same length, that is, Phase2 = Phase1, else Phase2 = Phase1 + 1.

The minimum nominal length of Phase2 has to be regarded as well. Phase2 may not be shorter than the CAN controller's Information Processing Time, which is, depending on the actual implementation, in the range of [0..2] t_q.

The length of the synchronization jump width is set to the least of 4, Phase1 or Phase2.

The oscillator tolerance range necessary for the resulting configuration is calculated by the formula given below:

$$(1 - df) \times fnom \leq fosc \leq (1 + df) \times fnom$$

where:

- `df` = Maximum tolerance of oscillator frequency
- `fosc` = Actual oscillator frequency

- fnom = Nominal oscillator frequency

Maximum frequency tolerance must take into account the following formulas:

$$df \leq \frac{(Phase_seg1, Phase_seg2)\min}{2 \times (13 \times tbit - Phase_Seg2)}$$

$$df\max = 2 \times df \times fnom$$

where:

- Phase1 and Phase2 are from Table 14-2 on page 563
- tbit = Bit Time
- dfmax = Maximum difference between two oscillators

If more than one configuration is possible, that configuration allowing the highest oscillator tolerance range should be chosen.

CAN nodes with different system clocks require different configurations to come to the same bit rate. The calculation of the propagation time in the CAN network, based on the nodes with the longest delay times, is done once for the whole network.

The CAN system's oscillator tolerance range is limited by the node with the lowest tolerance range.

The calculation may show that bus length or bit rate have to be decreased or that the oscillator frequencies' stability has to be increased in order to find a protocol-compliant configuration of the CAN bit timing.

14.3.16.1 Example for Bit Timing at High Baud Rate

In this example, the frequency of CAN clock is 25 MHz, and the bit rate is 1 Mbps.

```
bit time = 1 µs = n * tq = 5 * tq
tq = 200 ns
tq = (Baud rate Prescaler)/CAN Clock
Baud rate Prescaler = tq * CAN Clock
Baud rate Prescaler = 200E-9 * 25E6 = 5

tSync = 1 * tq = 200 ns               \\fixed at 1 time quanta

delay of bus driver 50 ns
delay of receiver circuit 30 ns
delay of bus line (40m) 220 ns
tProp 400 ns = 2 * tq                 \\400 is next integer multiple of tq

bit time = tSync + tTSeg1 + tTSeg2 = 5 * tq
bit time = tSync + tProp + tPhase 1 + tPhase2
tPhase 1 + tPhase2 = bit time - tSync - tProp
tPhase 1 + tPhase2 = (5 * tq) - (1 * tq) - (2 * tq)
tPhase 1 + tPhase2 = 2 * tq
```

```
tPhase1 = 1 * tq
tPhase2 = 1 * tq                        \\tPhase2 = tPhase1

tTSeg1 = tProp + tPhase1
tTSeg1 = (2 * tq) + (1 * tq)
tTSeg1 = 3 * tq

tTSeg2 = tPhase2
tTSeg2 = (Information Processing Time + 1) * tq
tTSeg2 = 1 * tq                          \\Assumes IPT=0

tSJW = 1 * tq                           \\Least of 4, Phase1 and Phase2
```

In the above example, the bit field values for the **CANBIT** register are:

TSEG2	= TSeg2 -1 = 1-1 = 0
TSEG1	= TSeg1 -1 = 3-1 = 2
SJW	= SJW -1 = 1-1 = 0
BRP	= Baud rate prescaler - 1 = 5-1 =4

The final value programmed into the **CANBIT** register = 0x0204.

14.3.16.2 Example for Bit Timing at Low Baud Rate

In this example, the frequency of the CAN clock is 50 MHz, and the bit rate is 100 Kbps.

```
bit time = 10 µs = n * tq = 10 * tq
tq = 1 µs
tq = (Baud rate Prescaler)/CAN Clock
Baud rate Prescaler = tq * CAN Clock
Baud rate Prescaler = 1E-6 * 50E6 = 50

tSync = 1 * tq = 1 µs                \\fixed at 1 time quanta

delay of bus driver 200 ns
delay of receiver circuit 80 ns
delay of bus line (40m) 220 ns
tProp 1 µs = 1 * tq                  \\1 µs is next integer multiple of tq

bit time = tSync + tTSeg1 + tTSeg2 = 10 * tq
bit time = tSync + tProp + tPhase 1 + tPhase2
tPhase 1 + tPhase2 = bit time - tSync - tProp
tPhase 1 + tPhase2 = (10 * tq) - (1 * tq)  - (1 * tq)
tPhase 1 + tPhase2 = 8 * tq
```

```
tPhase1 = 4 * tq
tPhase2 = 4 * tq                    \\tPhase1 = tPhase2

tTSeg1 = tProp + tPhase1
tTSeg1 = (1 * tq) + (4 * tq)
tTSeg1 = 5 * tq
tTSeg2 = tPhase2
tTSeg2 = (Information Processing Time + 4) × tq
tTSeg2 = 4 * tq                     \\Assumes IPT=0

tSJW = 4 * tq                       \\Least of 4, Phase1, and Phase2
```

TSEG2	= TSeg2 -1 = 4-1 = 3
TSEG1	= TSeg1 -1 = 5-1 = 4
SJW	= SJW -1 = 4-1 = 3
BRP	= Baud rate prescaler - 1 = 50-1 =49

The final value programmed into the **CANBIT** register = 0x34F1.

14.4 Register Map

Table 14-4 on page 567 lists the registers. All addresses given are relative to the CAN base address of:

- CAN0: 0x4004.0000

Note that the CAN module clock must be enabled before the registers can be programmed (see page 212). There must be a delay of 3 system clocks after the CAN module clock is enabled before any CAN module registers are accessed.

Table 14-4. CAN Register Map

Offset	Name	Type	Reset	Description	See page
0x000	CANCTL	R/W	0x0000.0001	CAN Control	570
0x004	CANSTS	R/W	0x0000.0000	CAN Status	572
0x008	CANERR	RO	0x0000.0000	CAN Error Counter	574
0x00C	CANBIT	R/W	0x0000.2301	CAN Bit Timing	575
0x010	CANINT	RO	0x0000.0000	CAN Interrupt	576
0x014	CANTST	R/W	0x0000.0000	CAN Test	577
0x018	CANBRPE	R/W	0x0000.0000	CAN Baud Rate Prescaler Extension	579

Table 14-4. CAN Register Map *(continued)*

Offset	Name	Type	Reset	Description	See page
0x020	CANIF1CRQ	R/W	0x0000.0001	CAN IF1 Command Request	580
0x024	CANIF1CMSK	R/W	0x0000.0000	CAN IF1 Command Mask	581
0x028	CANIF1MSK1	R/W	0x0000.FFFF	CAN IF1 Mask 1	583
0x02C	CANIF1MSK2	R/W	0x0000.FFFF	CAN IF1 Mask 2	584
0x030	CANIF1ARB1	R/W	0x0000.0000	CAN IF1 Arbitration 1	585
0x034	CANIF1ARB2	R/W	0x0000.0000	CAN IF1 Arbitration 2	586
0x038	CANIF1MCTL	R/W	0x0000.0000	CAN IF1 Message Control	588
0x03C	CANIF1DA1	R/W	0x0000.0000	CAN IF1 Data A1	590
0x040	CANIF1DA2	R/W	0x0000.0000	CAN IF1 Data A2	590
0x044	CANIF1DB1	R/W	0x0000.0000	CAN IF1 Data B1	590
0x048	CANIF1DB2	R/W	0x0000.0000	CAN IF1 Data B2	590
0x080	CANIF2CRQ	R/W	0x0000.0001	CAN IF2 Command Request	580
0x084	CANIF2CMSK	R/W	0x0000.0000	CAN IF2 Command Mask	581
0x088	CANIF2MSK1	R/W	0x0000.FFFF	CAN IF2 Mask 1	583
0x08C	CANIF2MSK2	R/W	0x0000.FFFF	CAN IF2 Mask 2	584
0x090	CANIF2ARB1	R/W	0x0000.0000	CAN IF2 Arbitration 1	585
0x094	CANIF2ARB2	R/W	0x0000.0000	CAN IF2 Arbitration 2	586
0x098	CANIF2MCTL	R/W	0x0000.0000	CAN IF2 Message Control	588
0x09C	CANIF2DA1	R/W	0x0000.0000	CAN IF2 Data A1	590
0x0A0	CANIF2DA2	R/W	0x0000.0000	CAN IF2 Data A2	590
0x0A4	CANIF2DB1	R/W	0x0000.0000	CAN IF2 Data B1	590
0x0A8	CANIF2DB2	R/W	0x0000.0000	CAN IF2 Data B2	590
0x100	CANTXRQ1	RO	0x0000.0000	CAN Transmission Request 1	591
0x104	CANTXRQ2	RO	0x0000.0000	CAN Transmission Request 2	591
0x120	CANNWDA1	RO	0x0000.0000	CAN New Data 1	592
0x124	CANNWDA2	RO	0x0000.0000	CAN New Data 2	592
0x140	CANMSG1INT	RO	0x0000.0000	CAN Message 1 Interrupt Pending	593
0x144	CANMSG2INT	RO	0x0000.0000	CAN Message 2 Interrupt Pending	593
0x160	CANMSG1VAL	RO	0x0000.0000	CAN Message 1 Valid	594
0x164	CANMSG2VAL	RO	0x0000.0000	CAN Message 2 Valid	594

14.5 CAN Register Descriptions

The remainder of this section lists and describes the CAN registers, in numerical order by address offset. There are two sets of Interface Registers that are used to access the Message Objects in the Message RAM: **CANIF1x** and **CANIF2x**. The function of the two sets are identical and are used to queue transactions.

Register 1: CAN Control (CANCTL), offset 0x000

This control register initializes the module and enables test mode and interrupts.

The bus-off recovery sequence (see CAN Specification Rev. 2.0) cannot be shortened by setting or clearing `INIT`. If the device goes bus-off, it sets `INIT`, stopping all bus activities. Once `INIT` has been cleared by the CPU, the device then waits for 129 occurrences of Bus Idle (129 * 11 consecutive High bits) before resuming normal operations. At the end of the bus-off recovery sequence, the Error Management Counters are reset.

During the waiting time after `INIT` is cleared, each time a sequence of 11 High bits has been monitored, a BITERROR0 code is written to the **CANSTS** register (the `LEC` field = 0x5), enabling the CPU to readily check whether the CAN bus is stuck Low or continuously disturbed, and to monitor the proceeding of the bus-off recovery sequence.

CAN Control (CANCTL)

CAN0 base: 0x4004.0000
Offset 0x000
Type R/W, reset 0x0000.0001

	31	30	29	28	27	26	25	24	23	22	21	20	19	18	17	16
	reserved															
Type	RO	RO	RO	RO	RO	RO	RO	RO	RO	RO	RO	RO	RO	RO	RO	RO
Reset	0	0	0	0	0	0	0	0	0	0	0	0	0	0	0	0

	15	14	13	12	11	10	9	8	7	6	5	4	3	2	1	0
	reserved								TEST	CCE	DAR	reserved	EIE	SIE	IE	INIT
Type	RO	RO	RO	RO	RO	RO	RO	RO	R/W	R/W	R/W	RO	R/W	R/W	R/W	R/W
Reset	0	0	0	0	0	0	0	0	0	0	0	0	0	0	0	1

Bit/Field	Name	Type	Reset	Description
31:8	reserved	RO	0x0000.00	Software should not rely on the value of a reserved bit. To provide compatibility with future products, the value of a reserved bit should be preserved across a read-modify-write operation.
7	TEST	R/W	0	Test Mode Enable 0: Normal operation 1: Test mode
6	CCE	R/W	0	Configuration Change Enable 0: Do not allow write access to the **CANBIT** register. 1: Allow write access to the **CANBIT** register if the `INIT` bit is 1.
5	DAR	R/W	0	Disable Automatic-Retransmission 0: Auto-retransmission of disturbed messages is enabled. 1: Auto-retransmission is disabled.
4	reserved	RO	0	Software should not rely on the value of a reserved bit. To provide compatibility with future products, the value of a reserved bit should be preserved across a read-modify-write operation.
3	EIE	R/W	0	Error Interrupt Enable 0: Disabled. No error status interrupt is generated. 1: Enabled. A change in the `BOFF` or `EWARN` bits in the **CANSTS** register generates an interrupt.

Bit/Field	Name	Type	Reset	Description
2	SIE	R/W	0	Status Interrupt Enable 0: Disabled. No status interrupt is generated. 1: Enabled. An interrupt is generated when a message has successfully been transmitted or received, or a CAN bus error has been detected. A change in the TXOK, RXOK or LEC bits in the **CANSTS** register generates an interrupt.
1	IE	R/W	0	CAN Interrupt Enable 0: Interrupts disabled. 1: Interrupts enabled.
0	INIT	R/W	1	Initialization 0: Normal operation. 1: Initialization started.

Register 2: CAN Status (CANSTS), offset 0x004

Important: This register is read-sensitive. See the register description for details.

The status register contains information for interrupt servicing such as Bus-Off, error count threshold, and error types.

The LEC field holds the code that indicates the type of the last error to occur on the CAN bus. This field is cleared when a message has been transferred (reception or transmission) without error. The unused error code 7 may be written by the CPU to manually set this field to an invalid error so that it can be checked for a change later.

An error interrupt is generated by the BOFF and EWARN bits and a status interrupt is generated by the RXOK, TXOK, and LEC bits, if the corresponding enable bits in the **CAN Control (CANCTL)** register are set. A change of the EPASS bit or a write to the RXOK, TXOK, or LEC bits does not generate an interrupt.

Reading the **CAN Status (CANSTS)** register clears the **CAN Interrupt (CANINT)** register, if it is pending.

CAN Status (CANSTS)

CAN0 base: 0x4004.0000
Offset 0x004
Type R/W, reset 0x0000.0000

	31	30	29	28	27	26	25	24	23	22	21	20	19	18	17	16
	reserved															
Type	RO	RO	RO	RO	RO	RO	RO	RO	RO	RO	RO	RO	RO	RO	RO	RO
Reset	0	0	0	0	0	0	0	0	0	0	0	0	0	0	0	0

	15	14	13	12	11	10	9	8	7	6	5	4	3	2	1	0
	reserved								BOFF	EWARN	EPASS	RXOK	TXOK	LEC		
Type	RO	RO	RO	RO	RO	RO	RO	RO	RO	RO	RO	R/W	R/W	R/W	R/W	R/W
Reset	0	0	0	0	0	0	0	0	0	0	0	0	0	0	0	0

Bit/Field	Name	Type	Reset	Description
31:8	reserved	RO	0x0000.00	Software should not rely on the value of a reserved bit. To provide compatibility with future products, the value of a reserved bit should be preserved across a read-modify-write operation.
7	BOFF	RO	0	Bus-Off Status 0: CAN controller is not in bus-off state. 1: CAN controller is in bus-off state.
6	EWARN	RO	0	Warning Status 0: Both error counters are below the error warning limit of 96. 1: At least one of the error counters has reached the error warning limit of 96.
5	EPASS	RO	0	Error Passive 0: The CAN module is in the Error Active state, that is, the receive or transmit error count is less than or equal to 127. 1: The CAN module is in the Error Passive state, that is, the receive or transmit error count is greater than 127.

Bit/Field	Name	Type	Reset	Description
4	RXOK	R/W	0	Received a Message Successfully 0: Since this bit was last cleared, no message has been successfully received. 1: Since this bit was last cleared, a message has been successfully received, independent of the result of the acceptance filtering. This bit is never cleared by the CAN module.
3	TXOK	R/W	0	Transmitted a Message Successfully 0: Since this bit was last cleared, no message has been successfully transmitted. 1: Since this bit was last cleared, a message has been successfully transmitted error-free and acknowledged by at least one other node. This bit is never cleared by the CAN module.
2:0	LEC	R/W	0x0	Last Error Code This is the type of the last error to occur on the CAN bus.

Value	Definition
0x0	No Error
0x1	Stuff Error More than 5 equal bits in a sequence have occurred in a part of a received message where this is not allowed.
0x2	Format Error A fixed format part of the received frame has the wrong format.
0x3	ACK Error The message transmitted was not acknowledged by another node.
0x4	Bit 1 Error When a message is transmitted, the CAN controller monitors the data lines to detect any conflicts. When the arbitration field is transmitted, data conflicts are a part of the arbitration protocol. When other frame fields are transmitted, data conflicts are considered errors. A Bit 1 Error indicates that the device wanted to send a High level (logical 1) but the monitored bus value was Low (logical 0).
0x5	Bit 0 Error A Bit 0 Error indicates that the device wanted to send a Low level (logical 0), but the monitored bus value was High (logical 1). During bus-off recovery, this status is set each time a sequence of 11 High bits has been monitored. This enables the CPU to monitor the proceeding of the bus-off recovery sequence without any disturbances to the bus.
0x6	CRC Error The CRC checksum was incorrect in the received message, indicating that the calculated value received did not match the calculated CRC of the data.
0x7	No Event When the LEC bit shows this value, no CAN bus event was detected since the CPU wrote this value to LEC.

Register 3: CAN Error Counter (CANERR), offset 0x008

This register contains the error counter values, which can be used to analyze the cause of an error.

CAN Error Counter (CANERR)

CAN0 base: 0x4004.0000
Offset 0x008
Type RO, reset 0x0000.0000

	31	30	29	28	27	26	25	24	23	22	21	20	19	18	17	16
	reserved															
Type	RO	RO	RO	RO	RO	RO	RO	RO	RO	RO	RO	RO	RO	RO	RO	RO
Reset	0	0	0	0	0	0	0	0	0	0	0	0	0	0	0	0

	15	14	13	12	11	10	9	8	7	6	5	4	3	2	1	0
	RP	REC							TEC							
Type	RO	RO	RO	RO	RO	RO	RO	RO	RO	RO	RO	RO	RO	RO	RO	RO
Reset	0	0	0	0	0	0	0	0	0	0	0	0	0	0	0	0

Bit/Field	Name	Type	Reset	Description
31:16	reserved	RO	0x0000	Software should not rely on the value of a reserved bit. To provide compatibility with future products, the value of a reserved bit should be preserved across a read-modify-write operation.
15	RP	RO	0	Received Error Passive 0: The Receive Error counter is below the Error Passive level (127 or less). 1: The Receive Error counter has reached the Error Passive level (128 or greater).
14:8	REC	RO	0x00	Receive Error Counter State of the receiver error counter (0 to 127).
7:0	TEC	RO	0x00	Transmit Error Counter State of the transmit error counter (0 to 255).

Register 4: CAN Bit Timing (CANBIT), offset 0x00C

This register is used to program the bit width and bit quantum. Values are programmed to the system clock frequency. This register is write-enabled by setting the `CCE` and `INIT` bits in the **CANCTL** register. See “Bit Time and Bit Rate” on page 562 for more information.

CAN Bit Timing (CANBIT)

CAN0 base: 0x4004.0000
Offset 0x00C
Type R/W, reset 0x0000.2301

	31	30	29	28	27	26	25	24	23	22	21	20	19	18	17	16
	reserved															
Type	RO	RO	RO	RO	RO	RO	RO	RO	RO	RO	RO	RO	RO	RO	RO	RO
Reset	0	0	0	0	0	0	0	0	0	0	0	0	0	0	0	0

	15	14	13	12	11	10	9	8	7	6	5	4	3	2	1	0
	reserved	TSEG2			TSEG1				SJW		BRP					
Type	RO	R/W	R/W	R/W	R/W	R/W	R/W	R/W	R/W	R/W	R/W	R/W	R/W	R/W	R/W	R/W
Reset	0	0	1	0	0	0	1	1	0	0	0	0	0	0	0	1

Bit/Field	Name	Type	Reset	Description
31:15	reserved	RO	0x0000	Software should not rely on the value of a reserved bit. To provide compatibility with future products, the value of a reserved bit should be preserved across a read-modify-write operation.
14:12	TSEG2	R/W	0x2	Time Segment after Sample Point 0x00-0x07: The actual interpretation by the hardware of this value is such that one more than the value programmed here is used. So, for example, a reset value of 0x2 defines that there is 3 (2+1) bit time quanta defined for `Phase_Seg2` (see Figure 14-4 on page 563). The bit time quanta is defined by the `BRP` field.
11:8	TSEG1	R/W	0x3	Time Segment Before Sample Point 0x00-0x0F: The actual interpretation by the hardware of this value is such that one more than the value programmed here is used. So, for example, the reset value of 0x3 defines that there is 4 (3+1) bit time quanta defined for `Phase_Seg1` (see Figure 14-4 on page 563). The bit time quanta is define by the `BRP` field.
7:6	SJW	R/W	0x0	(Re)Synchronization Jump Width 0x00-0x03: The actual interpretation by the hardware of this value is such that one more than the value programmed here is used. During the start of frame (SOF), if the CAN controller detects a phase error (misalignment), it can adjust the length of `TSEG2` or `TSEG1` by the value in `SJW`. So the reset value of 0 adjusts the length by 1 bit time quanta.
5:0	BRP	R/W	0x1	Baud Rate Prescaler The value by which the oscillator frequency is divided for generating the bit time quanta. The bit time is built up from a multiple of this quantum. 0x00-0x03F: The actual interpretation by the hardware of this value is such that one more than the value programmed here is used. `BRP` defines the number of CAN clock periods that make up 1 bit time quanta, so the reset value is 2 bit time quanta (1+1). The **CANBRPE** register can be used to further divide the bit time.

Register 5: CAN Interrupt (CANINT), offset 0x010

This register indicates the source of the interrupt.

If several interrupts are pending, the **CAN Interrupt (CANINT)** register points to the pending interrupt with the highest priority, disregarding the order in which the interrupts occurred. An interrupt remains pending until the CPU has cleared it. If the `INTID` field is not 0x0000 (the default) and the `IE` bit in the **CANCTL** register is set, the interrupt is active. The interrupt line remains active until the `INTID` field is cleared by reading the **CANSTS** register, or until the `IE` bit in the **CANCTL** register is cleared.

Note: Reading the **CAN Status (CANSTS)** register clears the **CAN Interrupt (CANINT)** register, if it is pending.

CAN Interrupt (CANINT)

CAN0 base: 0x4004.0000
Offset 0x010
Type RO, reset 0x0000.0000

	31	30	29	28	27	26	25	24	23	22	21	20	19	18	17	16
	reserved															
Type	RO	RO	RO	RO	RO	RO	RO	RO	RO	RO	RO	RO	RO	RO	RO	RO
Reset	0	0	0	0	0	0	0	0	0	0	0	0	0	0	0	0

	15	14	13	12	11	10	9	8	7	6	5	4	3	2	1	0
	INTID															
Type	RO	RO	RO	RO	RO	RO	RO	RO	RO	RO	RO	RO	RO	RO	RO	RO
Reset	0	0	0	0	0	0	0	0	0	0	0	0	0	0	0	0

Bit/Field	Name	Type	Reset	Description
31:16	reserved	RO	0x0000	Software should not rely on the value of a reserved bit. To provide compatibility with future products, the value of a reserved bit should be preserved across a read-modify-write operation.
15:0	INTID	RO	0x0000	Interrupt Identifier The number in this field indicates the source of the interrupt.

Value	Definition
0x0000	No interrupt pending
0x0001-0x0020	Number of the message object that caused the interrupt
0x0021-0x7FFF	Reserved
0x8000	Status Interrupt
0x8001-0xFFFF	Reserved

Register 6: CAN Test (CANTST), offset 0x014

This is the test mode register for self-test and external pin access. It is write-enabled by setting the TEST bit in the **CANCTL** register. Different test functions may be combined, however, CAN transfers will be affected if the TX bits in this register are not zero.

CAN Test (CANTST)

CAN0 base: 0x4004.0000
Offset 0x014
Type R/W, reset 0x0000.0000

	31	30	29	28	27	26	25	24	23	22	21	20	19	18	17	16
	reserved															
Type	RO	RO	RO	RO	RO	RO	RO	RO	RO	RO	RO	RO	RO	RO	RO	RO
Reset	0	0	0	0	0	0	0	0	0	0	0	0	0	0	0	0

	15	14	13	12	11	10	9	8	7	6	5	4	3	2	1	0
	reserved								RX	TX		LBACK	SILENT	BASIC	reserved	
Type	RO	RO	RO	RO	RO	RO	RO	RO	RO	R/W	R/W	R/W	R/W	R/W	RO	RO
Reset	0	0	0	0	0	0	0	0	0	0	0	0	0	0	0	0

Bit/Field	Name	Type	Reset	Description
31:8	reserved	RO	0x0000.00	Software should not rely on the value of a reserved bit. To provide compatibility with future products, the value of a reserved bit should be preserved across a read-modify-write operation.
7	RX	RO	0	Receive Observation Displays the value on the CANnRx pin.
6:5	TX	R/W	0x0	Transmit Control Overrides control of the CANnTx pin. Value — Description 0x0 — CAN Module Control CANnTx is controlled by the CAN module; default operation 0x1 — Sample Point The sample point is driven on the CANnTx signal. This mode is useful to monitor bit timing. 0x2 — Driven Low CANnTx drives a low value. This mode is useful for checking the physical layer of the CAN bus. 0x3 — Driven High CANnTx drives a high value. This mode is useful for checking the physical layer of the CAN bus.
4	LBACK	R/W	0	Loopback Mode 0: Disabled. 1: Enabled. In loopback mode, the data from the transmitter is routed into the receiver. Any data on the receive input is ignored.

Bit/Field	Name	Type	Reset	Description
3	SILENT	R/W	0	Silent Mode Do not transmit data; monitor the bus. Also known as Bus Monitor mode. 0: Disabled. 1: Enabled.
2	BASIC	R/W	0	Basic Mode 0: Disabled. 1: Use **CANIF1** registers as transmit buffer, and use **CANIF2** registers as receive buffer.
1:0	reserved	RO	0x0	Software should not rely on the value of a reserved bit. To provide compatibility with future products, the value of a reserved bit should be preserved across a read-modify-write operation.

Register 7: CAN Baud Rate Prescaler Extension (CANBRPE), offset 0x018

This register is used to further divide the bit time set with the BRP bit in the **CANBIT** register. It is write-enabled by setting the CCE bit in the **CANCTL** register.

CAN Baud Rate Prescaler Extension (CANBRPE)

CAN0 base: 0x4004.0000
Offset 0x018
Type R/W, reset 0x0000.0000

	31	30	29	28	27	26	25	24	23	22	21	20	19	18	17	16
	reserved															
Type	RO	RO	RO	RO	RO	RO	RO	RO	RO	RO	RO	RO	RO	RO	RO	RO
Reset	0	0	0	0	0	0	0	0	0	0	0	0	0	0	0	0

	15	14	13	12	11	10	9	8	7	6	5	4	3	2	1	0
	reserved												BRPE			
Type	RO	RO	RO	RO	RO	RO	RO	RO	RO	RO	RO	RO	R/W	R/W	R/W	R/W
Reset	0	0	0	0	0	0	0	0	0	0	0	0	0	0	0	0

Bit/Field	Name	Type	Reset	Description
31:4	reserved	RO	0x0000.000	Software should not rely on the value of a reserved bit. To provide compatibility with future products, the value of a reserved bit should be preserved across a read-modify-write operation.
3:0	BRPE	R/W	0x0	Baud Rate Prescaler Extension 0x00-0x0F: Extend the BRP bit in the **CANBIT** register to values up to 1023. The actual interpretation by the hardware is one more than the value programmed by BRPE (MSBs) and BRP (LSBs).

Register 8: CAN IF1 Command Request (CANIF1CRQ), offset 0x020

Register 9: CAN IF2 Command Request (CANIF2CRQ), offset 0x080

A message transfer is started as soon as there is a write of the message object number to the MNUM field when the TXRQST bit in the **CANIF1MCTL** register is set. With this write operation, the BUSY bit is automatically set to indicate that a transfer between the CAN Interface Registers and the internal message RAM is in progress. After a wait time of 3 to 6 CAN_CLK periods, the transfer between the interface register and the message RAM completes, which then clears the BUSY bit.

CAN IF1 Command Request (CANIF1CRQ)

CAN0 base: 0x4004.0000
Offset 0x020
Type R/W, reset 0x0000.0001

	31	30	29	28	27	26	25	24	23	22	21	20	19	18	17	16
	reserved															
Type	RO	RO	RO	RO	RO	RO	RO	RO	RO	RO	RO	RO	RO	RO	RO	RO
Reset	0	0	0	0	0	0	0	0	0	0	0	0	0	0	0	0

	15	14	13	12	11	10	9	8	7	6	5	4	3	2	1	0
	BUSY	reserved									MNUM					
Type	RO	RO	RO	RO	RO	RO	RO	RO	RO	RO	R/W	R/W	R/W	R/W	R/W	R/W
Reset	0	0	0	0	0	0	0	0	0	0	0	0	0	0	0	1

Bit/Field	Name	Type	Reset	Description
31:16	reserved	RO	0x0000	Software should not rely on the value of a reserved bit. To provide compatibility with future products, the value of a reserved bit should be preserved across a read-modify-write operation.
15	BUSY	RO	0	Busy Flag 0: Cleared when read/write action has finished. 1: Set when a write occurs to the message number in this register.
14:6	reserved	RO	0x00	Software should not rely on the value of a reserved bit. To provide compatibility with future products, the value of a reserved bit should be preserved across a read-modify-write operation.
5:0	MNUM	R/W	0x01	Message Number Selects one of the 32 message objects in the message RAM for data transfer. The message objects are numbered from 1 to 32.

Value	Description
0x00	Reserved 0 is not a valid message number; it is interpreted as 0x20, or object 32.
0x01-0x20	Message Number Indicates specified message object 1 to 32.
0x21-0x3F	Reserved Not a valid message number; values are shifted and it is interpreted as 0x01-0x1F.

Register 10: CAN IF1 Command Mask (CANIF1CMSK), offset 0x024

Register 11: CAN IF2 Command Mask (CANIF2CMSK), offset 0x084

Reading the Command Mask registers provides status for various functions. Writing to the Command Mask registers specifies the transfer direction and selects which buffer registers are the source or target of the data transfer.

Note that when a read from the message object buffer occurs when the `WRNRD` bit is clear and the `CLRINTPND` and/or `NEWDAT` bits are set, the interrupt pending and/or new data flags in the message object buffer are cleared.

CAN IF1 Command Mask (CANIF1CMSK)

CAN0 base: 0x4004.0000
Offset 0x024
Type R/W, reset 0x0000.0000

	31	30	29	28	27	26	25	24	23	22	21	20	19	18	17	16
	reserved															
Type	RO	RO	RO	RO	RO	RO	RO	RO	RO	RO	RO	RO	RO	RO	RO	RO
Reset	0	0	0	0	0	0	0	0	0	0	0	0	0	0	0	0

	15	14	13	12	11	10	9	8	7	6	5	4	3	2	1	0
	reserved								WRNRD	MASK	ARB	CONTROL	CLRINTPND	NEWDAT / TXRQST	DATAA	DATAB
Type	RO	RO	RO	RO	RO	RO	RO	RO	R/W	R/W	R/W	R/W	R/W	R/W	R/W	R/W
Reset	0	0	0	0	0	0	0	0	0	0	0	0	0	0	0	0

Bit/Field	Name	Type	Reset	Description
31:8	reserved	RO	0x0000.00	Software should not rely on the value of a reserved bit. To provide compatibility with future products, the value of a reserved bit should be preserved across a read-modify-write operation.
7	WRNRD	R/W	0	Write, Not Read Transfer the message object address specified by the **CAN Command Request (CANIFnCRQ)** register to the CAN message buffer registers. **Note:** Interrupt pending and new data conditions in the message buffer can be cleared by reading from the buffer (`WRNRD` = 0) when the `CLRINTPND` and/or `NEWDAT` bits are set.
6	MASK	R/W	0	Access Mask Bits 0: Mask bits unchanged. 1: Transfer `IDMASK` + `DIR` + `MXTD` of the message object into the Interface registers.
5	ARB	R/W	0	Access Arbitration Bits 0: Arbitration bits unchanged. 1: Transfer `ID` + `DIR` + `XTD` + `MSGVAL` of the message object into the Interface registers.

Bit/Field	Name	Type	Reset	Description
4	CONTROL	R/W	0	Access Control Bits 0: Control bits unchanged. 1: Transfer control bits from the **CANIFnMCTL** register into the Interface registers.
3	CLRINTPND	R/W	0	Clear Interrupt Pending Bit If `WRNRD` is set, this bit controls whether the `INTPND` bit in the **CANIFnMCTL** register is changed. 0: The `INTPND` bit in the message object remains unchanged. 1: The `INTPND` bit is cleared in the message object. If `WRNRD` is clear and this bit is clear, the interrupt pending status is transferred from the message buffer into the **CANIFnMCTL** register. If `WRNRD` is clear and this bit is set, the interrupt pending status is cleared in the message buffer. Note that the value of this bit that is transferred to the **CANIFnMCTL** register always reflects the status of the bits before clearing.
2	NEWDAT / TXRQST	R/W	0	NEWDAT / TXRQST Bit If `WRNRD` is set, this bit can act as a `TXRQST` bit and request a transmission. Note that when this bit is set, the `TXRQST` bit in the **CANIFnMCTL** register is ignored. 0: Transmission is not requested 1: Begin a transmission If `WRNRD` is clear and this bit is clear, the value of the new data status is transferred from the message buffer into the **CANIFnMCTL** register. If `WRNRD` is clear and this bit is set, the new data status is cleared in the message buffer. Note that the value of this bit that is transferred to the **CANIFnMCTL** register always reflects the status of the bits before clearing.
1	DATAA	R/W	0	Access Data Byte 0 to 3 When `WRNRD` = 1: 0: Data bytes 0-3 are unchanged. 1: Transfer data bytes 0-3 in message object to **CANIFnDA1** and **CANIFnDA2**. When `WRNRD` = 0: 0: Data bytes 0-3 are unchanged. 1: Transfer data bytes 0-3 in **CANIFnDA1** and **CANIFnDA2** to the message object.
0	DATAB	R/W	0	Access Data Byte 4 to 7 When `WRNRD` = 1: 0: Data bytes 4-7 are unchanged. 1: Transfer data bytes 4-7 in message object to **CANIFnDB1** and **CANIFnDB2**. When `WRNRD` = 0: 0: Data bytes 4-7 are unchanged. 1: Transfer data bytes 4-7 in **CANIFnDB1** and **CANIFnDB2** to the message object.

Register 12: CAN IF1 Mask 1 (CANIF1MSK1), offset 0x028

Register 13: CAN IF2 Mask 1 (CANIF2MSK1), offset 0x088

The mask information provided in this register accompanies the data (**CANIFnDAn**), arbitration information (**CANIFnARBn**), and control information (**CANIFnMCTL**) to the message object in the message RAM. The mask is used with the `ID` bit in the **CANIFnARBn** register for acceptance filtering. Additional mask information is contained in the **CANIFnMSK2** register.

CAN IF1 Mask 1 (CANIF1MSK1)

CAN0 base: 0x4004.0000
Offset 0x028
Type R/W, reset 0x0000.FFFF

	31	30	29	28	27	26	25	24	23	22	21	20	19	18	17	16
	reserved															
Type	RO	RO	RO	RO	RO	RO	RO	RO	RO	RO	RO	RO	RO	RO	RO	RO
Reset	0	0	0	0	0	0	0	0	0	0	0	0	0	0	0	0

	15	14	13	12	11	10	9	8	7	6	5	4	3	2	1	0
	MSK															
Type	R/W	R/W	R/W	R/W	R/W	R/W	R/W	R/W	R/W	R/W	R/W	R/W	R/W	R/W	R/W	R/W
Reset	1	1	1	1	1	1	1	1	1	1	1	1	1	1	1	1

Bit/Field	Name	Type	Reset	Description
31:16	reserved	RO	0x0000	Software should not rely on the value of a reserved bit. To provide compatibility with future products, the value of a reserved bit should be preserved across a read-modify-write operation.
15:0	MSK	R/W	0xFFFF	Identifier Mask When using a 29-bit identifier, these bits are used for bits [15:0] of the ID. The `MSK` field in the **CANIFnMSK2** register are used for bits [28:16] of the ID. When using an 11-bit identifier, these bits are ignored. 0: The corresponding identifier field (`ID`) in the message object cannot inhibit the match in acceptance filtering. 1: The corresponding identifier field (`ID`) is used for acceptance filtering.

Register 14: CAN IF1 Mask 2 (CANIF1MSK2), offset 0x02C

Register 15: CAN IF2 Mask 2 (CANIF2MSK2), offset 0x08C

This register holds extended mask information that accompanies the **CANIFnMSK1** register.

CAN IF1 Mask 2 (CANIF1MSK2)

CAN0 base: 0x4004.0000
Offset 0x02C
Type R/W, reset 0x0000.FFFF

	31	30	29	28	27	26	25	24	23	22	21	20	19	18	17	16
	reserved															
Type	RO	RO	RO	RO	RO	RO	RO	RO	RO	RO	RO	RO	RO	RO	RO	RO
Reset	0	0	0	0	0	0	0	0	0	0	0	0	0	0	0	0

	15	14	13	12	11	10	9	8	7	6	5	4	3	2	1	0
	MXTD	MDIR	reserved	MSK												
Type	R/W	R/W	RO	R/W	R/W	R/W	R/W	R/W	R/W	R/W	R/W	R/W	R/W	R/W	R/W	R/W
Reset	1	1	1	0	0	0	0	0	1	1	1	1	1	1	1	1

Bit/Field	Name	Type	Reset	Description
31:16	reserved	RO	0x0000	Software should not rely on the value of a reserved bit. To provide compatibility with future products, the value of a reserved bit should be preserved across a read-modify-write operation.
15	MXTD	R/W	0x1	Mask Extended Identifier 0: The extended identifier bit (`XTD` in the **CANIFnARB2** register) has no effect on the acceptance filtering. 1: The extended identifier bit `XTD` is used for acceptance filtering.
14	MDIR	R/W	0x1	Mask Message Direction 0: The message direction bit (`DIR` in the **CANIFnARB2** register) has no effect for acceptance filtering. 1: The message direction bit `DIR` is used for acceptance filtering.
13	reserved	RO	0x1	Software should not rely on the value of a reserved bit. To provide compatibility with future products, the value of a reserved bit should be preserved across a read-modify-write operation.
12:0	MSK	R/W	0xFF	Identifier Mask When using a 29-bit identifier, these bits are used for bits [28:16] of the ID. The `MSK` field in the **CANIFnMSK1** register are used for bits [15:0] of the ID. When using an 11-bit identifier, `MSK[12:2]` are used for bits [10:0] of the ID. 0: The corresponding identifier field (`ID`) in the message object cannot inhibit the match in acceptance filtering. 1: The corresponding identifier field (`ID`) is used for acceptance filtering.

Register 16: CAN IF1 Arbitration 1 (CANIF1ARB1), offset 0x030

Register 17: CAN IF2 Arbitration 1 (CANIF2ARB1), offset 0x090

These registers hold the identifiers for acceptance filtering.

CAN IF1 Arbitration 1 (CANIF1ARB1)

CAN0 base: 0x4004.0000
Offset 0x030
Type R/W, reset 0x0000.0000

	31	30	29	28	27	26	25	24	23	22	21	20	19	18	17	16
	reserved															
Type	RO	RO	RO	RO	RO	RO	RO	RO	RO	RO	RO	RO	RO	RO	RO	RO
Reset	0	0	0	0	0	0	0	0	0	0	0	0	0	0	0	0

	15	14	13	12	11	10	9	8	7	6	5	4	3	2	1	0
	ID															
Type	R/W	R/W	R/W	R/W	R/W	R/W	R/W	R/W	R/W	R/W	R/W	R/W	R/W	R/W	R/W	R/W
Reset	0	0	0	0	0	0	0	0	0	0	0	0	0	0	0	0

Bit/Field	Name	Type	Reset	Description
31:16	reserved	RO	0x0000	Software should not rely on the value of a reserved bit. To provide compatibility with future products, the value of a reserved bit should be preserved across a read-modify-write operation.
15:0	ID	R/W	0x0000	Message Identifier This bit field is used with the `ID` field in the **CANIFnARB2** register to create the message identifier. When using a 29-bit identifier, bits 15:0 of the **CANIFnARB1** register are [15:0] of the ID, while bits 12:0 of the **CANIFnARB2** register are [28:16] of the ID. When using an 11-bit identifier, these bits are not used.

Register 18: CAN IF1 Arbitration 2 (CANIF1ARB2), offset 0x034

Register 19: CAN IF2 Arbitration 2 (CANIF2ARB2), offset 0x094

These registers hold information for acceptance filtering.

CAN IF1 Arbitration 2 (CANIF1ARB2)

CAN0 base: 0x4004.0000
Offset 0x034
Type R/W, reset 0x0000.0000

	31	30	29	28	27	26	25	24	23	22	21	20	19	18	17	16
	reserved															
Type	RO	RO	RO	RO	RO	RO	RO	RO	RO	RO	RO	RO	RO	RO	RO	RO
Reset	0	0	0	0	0	0	0	0	0	0	0	0	0	0	0	0

	15	14	13	12	11	10	9	8	7	6	5	4	3	2	1	0
	MSGVAL	XTD	DIR	ID												
Type	R/W	R/W	R/W	R/W	R/W	R/W	R/W	R/W	R/W	R/W	R/W	R/W	R/W	R/W	R/W	R/W
Reset	0	0	0	0	0	0	0	0	0	0	0	0	0	0	0	0

Bit/Field	Name	Type	Reset	Description
31:16	reserved	RO	0x0000	Software should not rely on the value of a reserved bit. To provide compatibility with future products, the value of a reserved bit should be preserved across a read-modify-write operation.
15	MSGVAL	R/W	0	Message Valid 0: The message object is ignored by the message handler. 1: The message object is configured and ready to be considered by the message handler within the CAN controller. All unused message objects should have this bit cleared during initialization and before clearing the `INIT` bit in the **CANCTL** register. The `MSGVAL` bit must also be cleared before any of the following bits are modified or if the message object is no longer required: the `ID` fields in the **CANIFnARBn** registers, the `XTD` and `DIR` bits in the **CANIFnARB2** register, or the `DLC` field in the **CANIFnMCTL** register.
14	XTD	R/W	0	Extended Identifier 0: An 11-bit Standard Identifier is used for this message object. 1: A 29-bit Extended Identifier is used for this message object.
13	DIR	R/W	0	Message Direction 0: Receive. When the `TXRQST` bit in the **CANIFnMCTL** register is set, a remote frame with the identifier of this message object is received. On reception of a data frame with matching identifier, that message is stored in this message object. 1: Transmit. When the `TXRQST` bit in the **CANIFnMCTL** register is set, the respective message object is transmitted as a data frame. On reception of a remote frame with matching identifier, the `TXRQST` bit of this message object is set (if `RMTEN=1`).

Bit/Field	Name	Type	Reset	Description
12:0	ID	R/W	0x000	Message Identifier This bit field is used with the `ID` field in the **CANIFnARB2** register to create the message identifier. When using a 29-bit identifier, `ID[15:0]` of the **CANIFnARB1** register are [15:0] of the ID, while these bits, `ID[12:0]`, are [28:16] of the ID. When using an 11-bit identifier, `ID[12:2]` are used for bits [10:0] of the ID. The `ID` field in the **CANIFnARB1** register is ignored.

Register 20: CAN IF1 Message Control (CANIF1MCTL), offset 0x038

Register 21: CAN IF2 Message Control (CANIF2MCTL), offset 0x098

This register holds the control information associated with the message object to be sent to the Message RAM.

CAN IF1 Message Control (CANIF1MCTL)

CAN0 base: 0x4004.0000
Offset 0x038
Type R/W, reset 0x0000.0000

	31	30	29	28	27	26	25	24	23	22	21	20	19	18	17	16
	reserved															
Type	RO	RO	RO	RO	RO	RO	RO	RO	RO	RO	RO	RO	RO	RO	RO	RO
Reset	0	0	0	0	0	0	0	0	0	0	0	0	0	0	0	0

	15	14	13	12	11	10	9	8	7	6	5	4	3	2	1	0
	NEWDAT	MSGLST	INTPND	UMASK	TXIE	RXIE	RMTEN	TXRQST	EOB	reserved			DLC			
Type	R/W	R/W	R/W	R/W	R/W	R/W	R/W	R/W	R/W	RO	RO	RO	R/W	R/W	R/W	R/W
Reset	0	0	0	0	0	0	0	0	0	0	0	0	0	0	0	0

Bit/Field	Name	Type	Reset	Description
31:16	reserved	RO	0x0000	Software should not rely on the value of a reserved bit. To provide compatibility with future products, the value of a reserved bit should be preserved across a read-modify-write operation.
15	NEWDAT	R/W	0	New Data 0: No new data has been written into the data portion of this message object by the message handler since the last time this flag was cleared by the CPU. 1: The message handler or the CPU has written new data into the data portion of this message object.
14	MSGLST	R/W	0	Message Lost 0 : No message was lost since the last time this bit was cleared by the CPU. 1: The message handler stored a new message into this object when `NEWDAT` was set; the CPU has lost a message. This bit is only valid for message objects when the `DIR` bit in the **CANIFnARB2** register clear (receive).
13	INTPND	R/W	0	Interrupt Pending 0: This message object is not the source of an interrupt. 1: This message object is the source of an interrupt. The interrupt identifier in the **CANINT** register points to this message object if there is not another interrupt source with a higher priority.
12	UMASK	R/W	0	Use Acceptance Mask 0: Mask ignored. 1: Use mask (`MSK`, `MXTD`, and `MDIR` bits in the **CANIFnMSKn** registers) for acceptance filtering.

Bit/Field	Name	Type	Reset	Description
11	TXIE	R/W	0	Transmit Interrupt Enable 0: The `INTPND` bit in the **CANIFnMCTL** register is unchanged after a successful transmission of a frame. 1: The `INTPND` bit in the **CANIFnMCTL** register is set after a successful transmission of a frame.
10	RXIE	R/W	0	Receive Interrupt Enable 0: The `INTPND` bit in the **CANIFnMCTL** register is unchanged after a successful reception of a frame. 1: The `INTPND` bit in the **CANIFnMCTL** register is set after a successful reception of a frame.
9	RMTEN	R/W	0	Remote Enable 0: At the reception of a remote frame, the `TXRQST` bit in the **CANIFnMCTL** register is left unchanged. 1: At the reception of a remote frame, the `TXRQST` bit in the **CANIFnMCTL** register is set.
8	TXRQST	R/W	0	Transmit Request 0: This message object is not waiting for transmission. 1: The transmission of this message object is requested and is not yet done.
7	EOB	R/W	0	End of Buffer 0: Message object belongs to a FIFO Buffer and is not the last message object of that FIFO Buffer. 1: Single message object or last message object of a FIFO Buffer. This bit is used to concatenate two or more message objects (up to 32) to build a FIFO buffer. For a single message object (thus not belonging to a FIFO buffer), this bit must be set.
6:4	reserved	RO	0x0	Software should not rely on the value of a reserved bit. To provide compatibility with future products, the value of a reserved bit should be preserved across a read-modify-write operation.
3:0	DLC	R/W	0x0	Data Length Code Value — Description 0x0-0x8 — Specifies the number of bytes in the data frame. 0x9-0xF — Defaults to a data frame with 8 bytes. The `DLC` field in the **CANIFnMCTL** register of a message object must be defined the same as in all the corresponding objects with the same identifier at other nodes. When the message handler stores a data frame, it writes `DLC` to the value given by the received message.

Register 22: CAN IF1 Data A1 (CANIF1DA1), offset 0x03C

Register 23: CAN IF1 Data A2 (CANIF1DA2), offset 0x040

Register 24: CAN IF1 Data B1 (CANIF1DB1), offset 0x044

Register 25: CAN IF1 Data B2 (CANIF1DB2), offset 0x048

Register 26: CAN IF2 Data A1 (CANIF2DA1), offset 0x09C

Register 27: CAN IF2 Data A2 (CANIF2DA2), offset 0x0A0

Register 28: CAN IF2 Data B1 (CANIF2DB1), offset 0x0A4

Register 29: CAN IF2 Data B2 (CANIF2DB2), offset 0x0A8

These registers contain the data to be sent or that has been received. In a CAN data frame, data byte 0 is the first byte to be transmitted or received and data byte 7 is the last byte to be transmitted or received. In CAN's serial bit stream, the MSB of each byte is transmitted first.

CAN IF1 Data A1 (CANIF1DA1)

CAN0 base: 0x4004.0000
Offset 0x03C
Type R/W, reset 0x0000.0000

	31	30	29	28	27	26	25	24	23	22	21	20	19	18	17	16
	reserved															
Type	RO	RO	RO	RO	RO	RO	RO	RO	RO	RO	RO	RO	RO	RO	RO	RO
Reset	0	0	0	0	0	0	0	0	0	0	0	0	0	0	0	0

	15	14	13	12	11	10	9	8	7	6	5	4	3	2	1	0
	DATA															
Type	R/W	R/W	R/W	R/W	R/W	R/W	R/W	R/W	R/W	R/W	R/W	R/W	R/W	R/W	R/W	R/W
Reset	0	0	0	0	0	0	0	0	0	0	0	0	0	0	0	0

Bit/Field	Name	Type	Reset	Description
31:16	reserved	RO	0x0000	Software should not rely on the value of a reserved bit. To provide compatibility with future products, the value of a reserved bit should be preserved across a read-modify-write operation.
15:0	DATA	R/W	0x0000	Data The **CANIFnDA1** registers contain data bytes 1 and 0; **CANIFnDA2** data bytes 3 and 2; **CANIFnDB1** data bytes 5 and 4; and **CANIFnDB2** data bytes 7 and 6.

Register 30: CAN Transmission Request 1 (CANTXRQ1), offset 0x100

Register 31: CAN Transmission Request 2 (CANTXRQ2), offset 0x104

The **CANTXRQ1** and **CANTXRQ2** registers hold the TXRQST bits of the 32 message objects. By reading out these bits, the CPU can check which message object has a transmission request pending. The TXRQST bit of a specific message object can be changed by three sources: (1) the CPU via the **CANIFnMCTL** register, (2) the message handler state machine after the reception of a remote frame, or (3) the message handler state machine after a successful transmission.

The **CANTXRQ1** register contains the TXRQST bits of the first 16 message objects in the message RAM; the **CANTXRQ2** register contains the TXRQST bits of the second 16 message objects.

CAN Transmission Request 1 (CANTXRQ1)

CAN0 base: 0x4004.0000
Offset 0x100
Type RO, reset 0x0000.0000

	31	30	29	28	27	26	25	24	23	22	21	20	19	18	17	16
	reserved															
Type	RO	RO	RO	RO	RO	RO	RO	RO	RO	RO	RO	RO	RO	RO	RO	RO
Reset	0	0	0	0	0	0	0	0	0	0	0	0	0	0	0	0

	15	14	13	12	11	10	9	8	7	6	5	4	3	2	1	0
	TXRQST															
Type	RO	RO	RO	RO	RO	RO	RO	RO	RO	RO	RO	RO	RO	RO	RO	RO
Reset	0	0	0	0	0	0	0	0	0	0	0	0	0	0	0	0

Bit/Field	Name	Type	Reset	Description
31:16	reserved	RO	0x0000	Software should not rely on the value of a reserved bit. To provide compatibility with future products, the value of a reserved bit should be preserved across a read-modify-write operation.
15:0	TXRQST	RO	0x0000	Transmission Request Bits 0: The corresponding message object is not waiting for transmission. 1: The transmission of the corresponding message object is requested and is not yet done.

Register 32: CAN New Data 1 (CANNWDA1), offset 0x120

Register 33: CAN New Data 2 (CANNWDA2), offset 0x124

The **CANNWDA1** and **CANNWDA2** registers hold the NEWDAT bits of the 32 message objects. By reading these bits, the CPU can check which message object has its data portion updated. The NEWDAT bit of a specific message object can be changed by three sources: (1) the CPU via the **CANIFnMCTL** register, (2) the message handler state machine after the reception of a data frame, or (3) the message handler state machine after a successful transmission.

The **CANNWDA1** register contains the NEWDAT bits of the first 16 message objects in the message RAM; the **CANNWDA2** register contains the NEWDAT bits of the second 16 message objects.

CAN New Data 1 (CANNWDA1)

CAN0 base: 0x4004.0000
Offset 0x120
Type RO, reset 0x0000.0000

	31	30	29	28	27	26	25	24	23	22	21	20	19	18	17	16
	reserved															
Type	RO	RO	RO	RO	RO	RO	RO	RO	RO	RO	RO	RO	RO	RO	RO	RO
Reset	0	0	0	0	0	0	0	0	0	0	0	0	0	0	0	0

	15	14	13	12	11	10	9	8	7	6	5	4	3	2	1	0
	NEWDAT															
Type	RO	RO	RO	RO	RO	RO	RO	RO	RO	RO	RO	RO	RO	RO	RO	RO
Reset	0	0	0	0	0	0	0	0	0	0	0	0	0	0	0	0

Bit/Field	Name	Type	Reset	Description
31:16	reserved	RO	0x0000	Software should not rely on the value of a reserved bit. To provide compatibility with future products, the value of a reserved bit should be preserved across a read-modify-write operation.
15:0	NEWDAT	RO	0x0000	New Data Bits 0: No new data has been written into the data portion of the corresponding message object by the message handler since the last time this flag was cleared by the CPU. 1: The message handler or the CPU has written new data into the data portion of the corresponding message object.

Register 34: CAN Message 1 Interrupt Pending (CANMSG1INT), offset 0x140

Register 35: CAN Message 2 Interrupt Pending (CANMSG2INT), offset 0x144

The **CANMSG1INT** and **CANMSG2INT** registers hold the `INTPND` bits of the 32 message objects. By reading these bits, the CPU can check which message object has an interrupt pending. The `INTPND` bit of a specific message object can be changed through two sources: (1) the CPU via the **CANIFnMCTL** register, or (2) the message handler state machine after the reception or transmission of a frame.

This field is also encoded in the **CANINT** register.

The **CANMSG1INT** register contains the `INTPND` bits of the first 16 message objects in the message RAM; the **CANMSG2INT** register contains the `INTPND` bits of the second 16 message objects.

CAN Message 1 Interrupt Pending (CANMSG1INT)

CAN0 base: 0x4004.0000
Offset 0x140
Type RO, reset 0x0000.0000

	31	30	29	28	27	26	25	24	23	22	21	20	19	18	17	16
	reserved															
Type	RO	RO	RO	RO	RO	RO	RO	RO	RO	RO	RO	RO	RO	RO	RO	RO
Reset	0	0	0	0	0	0	0	0	0	0	0	0	0	0	0	0

	15	14	13	12	11	10	9	8	7	6	5	4	3	2	1	0
	INTPND															
Type	RO	RO	RO	RO	RO	RO	RO	RO	RO	RO	RO	RO	RO	RO	RO	RO
Reset	0	0	0	0	0	0	0	0	0	0	0	0	0	0	0	0

Bit/Field	Name	Type	Reset	Description
31:16	reserved	RO	0x0000	Software should not rely on the value of a reserved bit. To provide compatibility with future products, the value of a reserved bit should be preserved across a read-modify-write operation.
15:0	INTPND	RO	0x0000	Interrupt Pending Bits 0: The corresponding message object is not the source of an interrupt. 1: The corresponding message object is the source of an interrupt.

Register 36: CAN Message 1 Valid (CANMSG1VAL), offset 0x160

Register 37: CAN Message 2 Valid (CANMSG2VAL), offset 0x164

The **CANMSG1VAL** and **CANMSG2VAL** registers hold the `MSGVAL` bits of the 32 message objects. By reading these bits, the CPU can check which message object is valid. The message value of a specific message object can be changed with the **CANIFnMCTL** register.

The **CANMSG1VAL** register contains the `MSGVAL` bits of the first 16 message objects in the message RAM; the **CANMSG2VAL** register contains the `MSGVAL` bits of the second 16 message objects in the message RAM.

CAN Message 1 Valid (CANMSG1VAL)

CAN0 base: 0x4004.0000
Offset 0x160
Type RO, reset 0x0000.0000

	31	30	29	28	27	26	25	24	23	22	21	20	19	18	17	16
	reserved															
Type	RO	RO	RO	RO	RO	RO	RO	RO	RO	RO	RO	RO	RO	RO	RO	RO
Reset	0	0	0	0	0	0	0	0	0	0	0	0	0	0	0	0

	15	14	13	12	11	10	9	8	7	6	5	4	3	2	1	0
	MSGVAL															
Type	RO	RO	RO	RO	RO	RO	RO	RO	RO	RO	RO	RO	RO	RO	RO	RO
Reset	0	0	0	0	0	0	0	0	0	0	0	0	0	0	0	0

Bit/Field	Name	Type	Reset	Description
31:16	reserved	RO	0x0000	Software should not rely on the value of a reserved bit. To provide compatibility with future products, the value of a reserved bit should be preserved across a read-modify-write operation.
15:0	MSGVAL	RO	0x0000	Message Valid Bits 0: The corresponding message object is not configured and is ignored by the message handler. 1: The corresponding message object is configured and should be considered by the message handler.

15 Pulse Width Modulator (PWM)

Pulse width modulation (PWM) is a powerful technique for digitally encoding analog signal levels. High-resolution counters are used to generate a square wave, and the duty cycle of the square wave is modulated to encode an analog signal. Typical applications include switching power supplies and motor control.

The Stellaris® PWM module consists of two PWM generator blocks and a control block. The control block determines the polarity of the PWM signals, and which signals are passed through to the pins.

Each PWM generator block produces two PWM signals that can either be independent signals (other than being based on the same timer and therefore having the same frequency) or a single pair of complementary signals with dead-band delays inserted. The output of the PWM generation blocks are managed by the output control block before being passed to the device pins.

The Stellaris PWM module provides a great deal of flexibility. It can generate simple PWM signals, such as those required by a simple charge pump. It can also generate paired PWM signals with dead-band delays, such as those required by a half-H bridge driver.

Each Stellaris PWM module has the following features:

- Two PWM generator blocks, each with one 16-bit counter, two PWM comparators, a PWM signal generator, a dead-band generator, and an interrupt/ADC-trigger selector
- Two fault inputs in hardware to promote low-latency shutdown
- One 16-bit counter
  - Runs in Down or Up/Down mode
  - Output frequency controlled by a 16-bit load value
  - Load value updates can be synchronized
  - Produces output signals at zero and load value
- Two PWM comparators
  - Comparator value updates can be synchronized
  - Produces output signals on match
- PWM generator
  - Output PWM signal is constructed based on actions taken as a result of the counter and PWM comparator output signals
  - Produces two independent PWM signals
- Dead-band generator
  - Produces two PWM signals with programmable dead-band delays suitable for driving a half-H bridge
  - Can be bypassed, leaving input PWM signals unmodified

- Flexible output control block with PWM output enable of each PWM signal
  - PWM output enable of each PWM signal
  - Optional output inversion of each PWM signal (polarity control)
  - Optional fault handling for each PWM signal
  - Synchronization of timers in the PWM generator blocks
  - Extended PWM synchronization of timer/comparator updates across the PWM generator blocks
  - Interrupt status summary of the PWM generator blocks
  - Extended PWM fault handling, with multiple fault signals, programmable polarities, and filtering
- Can initiate an ADC sample sequence

15.1 Block Diagram

Figure 15-1 on page 596 provides the Stellaris PWM module unit diagram and Figure 15-2 on page 597 provides a more detailed diagram of a Stellaris PWM generator. The LM3S2678 controller contains two generator blocks (PWM0 and PWM1) and generates four independent PWM signals or two paired PWM signals with dead-band delays inserted.

Figure 15-1. PWM Unit Diagram

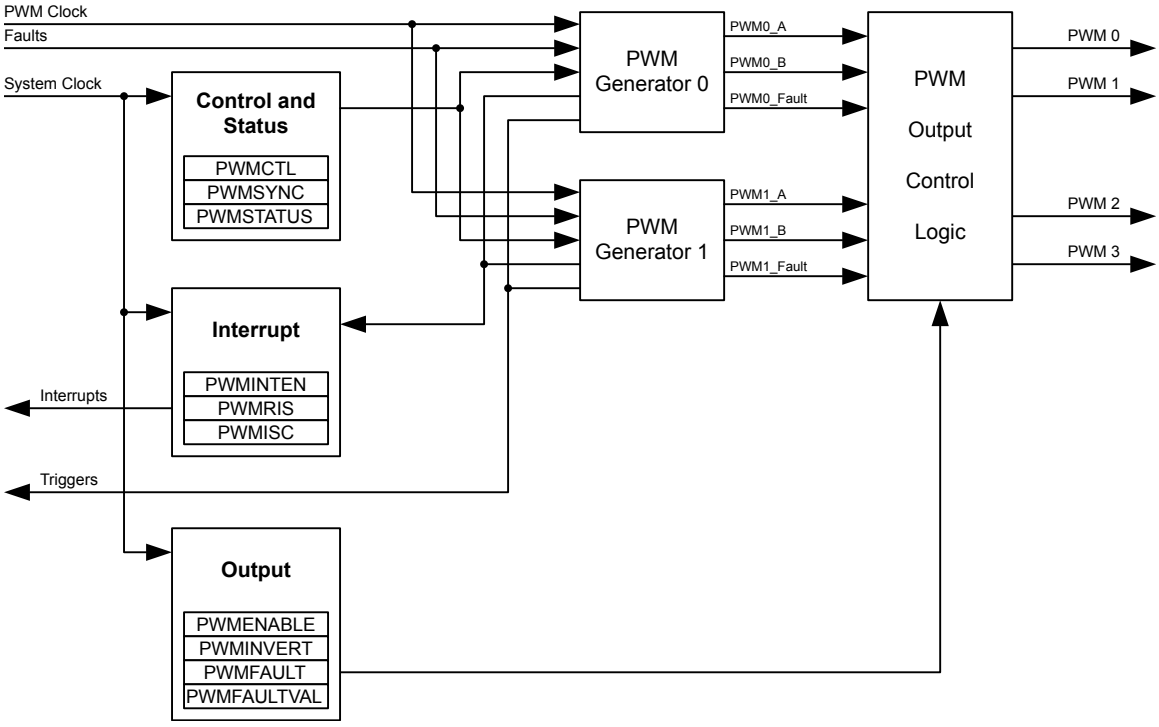

Figure 15-2. PWM Module Block Diagram

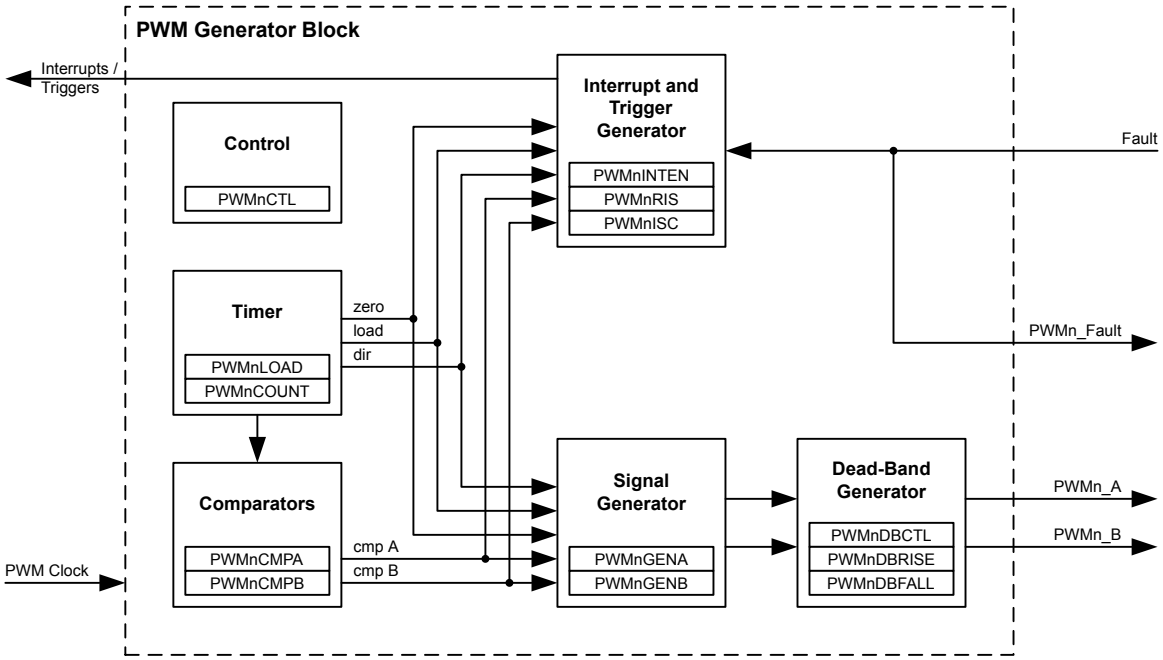

15.2 Signal Description

Table 15-1 on page 597 lists the external signals of the PWM module and describes the function of each. The PWM controller signals are alternate functions for some GPIO signals and default to be GPIO signals at reset. The column in the table below titled "Pin Assignment" lists the possible GPIO pin placements for these PWM signals. The `AFSEL` bit in the **GPIO Alternate Function Select (GPIOAFSEL)** register (page 344) should be set to choose the PWM function. For more information on configuring GPIOs, see “General-Purpose Input/Outputs (GPIOs)” on page 324.

Table 15-1. PWM Signals (64LQFP)

Pin Name	Pin Number	Pin Type	Buffer Type[a]	Description
`Fault0`	27	I	TTL	PWM Fault 0.
`Fault1`	56	I	TTL	PWM Fault 1.
`PWM0`	25	O	TTL	PWM 0. This signal is controlled by PWM Generator 0.
`PWM1`	26	O	TTL	PWM 1. This signal is controlled by PWM Generator 0.
`PWM2`	41	O	TTL	PWM 2. This signal is controlled by PWM Generator 1.
`PWM3`	42	O	TTL	PWM 3. This signal is controlled by PWM Generator 1.

a. The TTL designation indicates the pin has TTL-compatible voltage levels.

15.3 Functional Description

15.3.1 PWM Timer

The timer in each PWM generator runs in one of two modes: Count-Down mode or Count-Up/Down mode. In Count-Down mode, the timer counts from the load value to zero, goes back to the load value, and continues counting down. In Count-Up/Down mode, the timer counts from zero up to the load value, back down to zero, back up to the load value, and so on. Generally, Count-Down mode

is used for generating left- or right-aligned PWM signals, while the Count-Up/Down mode is used for generating center-aligned PWM signals.

The timers output three signals that are used in the PWM generation process: the direction signal (this is always Low in Count-Down mode, but alternates between Low and High in Count-Up/Down mode), a single-clock-cycle-width High pulse when the counter is zero, and a single-clock-cycle-width High pulse when the counter is equal to the load value. Note that in Count-Down mode, the zero pulse is immediately followed by the load pulse.

15.3.2 PWM Comparators

There are two comparators in each PWM generator that monitor the value of the counter; when either match the counter, they output a single-clock-cycle-width High pulse. When in Count-Up/Down mode, these comparators match both when counting up and when counting down; they are therefore qualified by the counter direction signal. These qualified pulses are used in the PWM generation process. If either comparator match value is greater than the counter load value, then that comparator never outputs a High pulse.

Figure 15-3 on page 598 shows the behavior of the counter and the relationship of these pulses when the counter is in Count-Down mode. Figure 15-4 on page 599 shows the behavior of the counter and the relationship of these pulses when the counter is in Count-Up/Down mode.

Figure 15-3. PWM Count-Down Mode

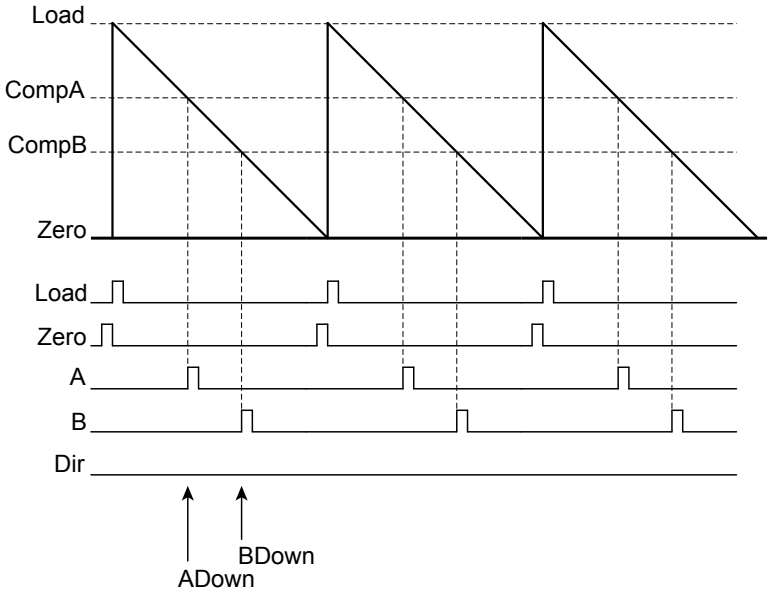

Figure 15-4. PWM Count-Up/Down Mode

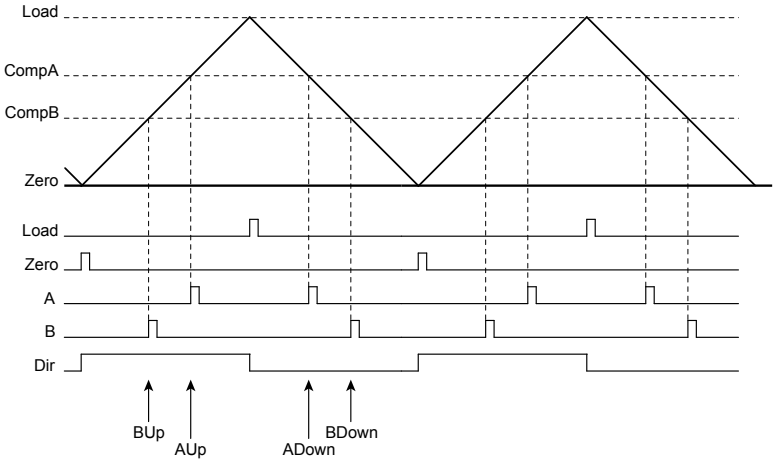

15.3.3 PWM Signal Generator

The PWM generator takes these pulses (qualified by the direction signal), and generates two PWM signals. In Count-Down mode, there are four events that can affect the PWM signal: zero, load, match A down, and match B down. In Count-Up/Down mode, there are six events that can affect the PWM signal: zero, load, match A down, match A up, match B down, and match B up. The match A or match B events are ignored when they coincide with the zero or load events. If the match A and match B events coincide, the first signal, `PWMA`, is generated based only on the match A event, and the second signal, `PWMB`, is generated based only on the match B event.

For each event, the effect on each output PWM signal is programmable: it can be left alone (ignoring the event), it can be toggled, it can be driven Low, or it can be driven High. These actions can be used to generate a pair of PWM signals of various positions and duty cycles, which do or do not overlap. Figure 15-5 on page 599 shows the use of Count-Up/Down mode to generate a pair of center-aligned, overlapped PWM signals that have different duty cycles.

Figure 15-5. PWM Generation Example In Count-Up/Down Mode

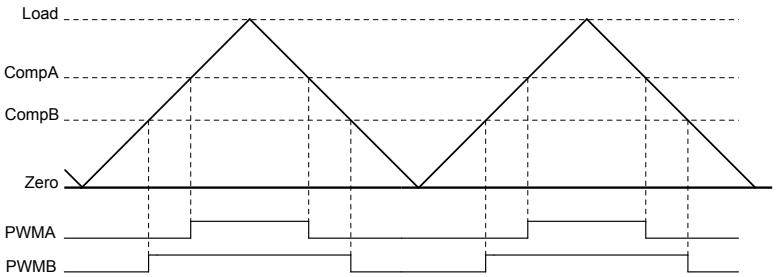

In this example, the first generator is set to drive High on match A up, drive Low on match A down, and ignore the other four events. The second generator is set to drive High on match B up, drive Low on match B down, and ignore the other four events. Changing the value of comparator A changes the duty cycle of the `PWMA` signal, and changing the value of comparator B changes the duty cycle of the `PWMB` signal.

15.3.4 Dead-Band Generator

The two PWM signals produced by the PWM generator are passed to the dead-band generator. If disabled, the PWM signals simply pass through unmodified. If enabled, the second PWM signal is lost and two PWM signals are generated based on the first PWM signal. The first output PWM signal is the input signal with the rising edge delayed by a programmable amount. The second output PWM signal is the inversion of the input signal with a programmable delay added between the falling edge of the input signal and the rising edge of this new signal.

This is therefore a pair of active High signals where one is always High, except for a programmable amount of time at transitions where both are Low. These signals are therefore suitable for driving a half-H bridge, with the dead-band delays preventing shoot-through current from damaging the power electronics. Figure 15-6 on page 600 shows the effect of the dead-band generator on an input PWM signal.

Figure 15-6. PWM Dead-Band Generator

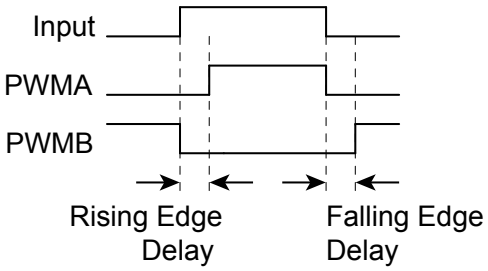

15.3.5 Interrupt/ADC-Trigger Selector

The PWM generator also takes the same four (or six) counter events and uses them to generate an interrupt or an ADC trigger. Any of these events or a set of these events can be selected as a source for an interrupt; when any of the selected events occur, an interrupt is generated. Additionally, the same event, a different event, the same set of events, or a different set of events can be selected as a source for an ADC trigger; when any of these selected events occur, an ADC trigger pulse is generated. The selection of events allows the interrupt or ADC trigger to occur at a specific position within the PWM signal. Note that interrupts and ADC triggers are based on the raw events; delays in the PWM signal edges caused by the dead-band generator are not taken into account.

15.3.6 Synchronization Methods

The PWM unit provides two PWM generators providing four PWM outputs that may be used in a wide variety of applications. Generally speaking, this falls into combinations of two categories of operation:

- **Unsynchronized.** The PWM generator and its two output signals are used by itself, independent of other PWM generators.
- **Synchronized.** The PWM generator and its two outputs signals are used in conjunction with other PWM generators using a common, unified time base.

If multiple PWM generators are configured with the same counter load value, this can be used to guarantee that they also have the same count value (this does imply that the PWM generators must be configured before they are synchronized). With this, more than two PWM signals can be produced with a known relationship between the edges of those signals since the counters always have the same values. Other states in the unit provide mechanisms to maintain the common time base and mutual synchronization.

The counter in a PWM unit generator can be reset to zero by writing the **PWM Time Base Sync (PWMSYNC)** register and setting the `Sync` bit associated with the generator. Multiple PWM generators can be synchronized together by setting all necessary `Sync` bits in one access. For example, setting the `Sync0` and `Sync1` bits in the **PWMSYNC** register causes the counters in PWM generators 0 and 1 to reset together.

Additionally, the state of a PWM unit is affected by writing to the registers of the PWM unit and the PWM units' generators, which has an effect on the synchronization between multiple PWM generators. Depending on the register accessed, the register state is updated in one of the following three ways:

- **Immediately.** The write value has immediate effect, and the hardware reacts immediately.
- **Locally Synchronized.** The write value does not affect the logic until the counter reaches the value zero. In this case, the effect of the write is deferred until the end of the PWM cycle (when the counter reaches zero). By waiting for the counter to reach zero, a guaranteed behavior is defined, and overly short or overly long output PWM pulses are prevented.
- **Globally Synchronized.** The write value does not affect the logic until two sequential events have occurred: (1) the global synchronization bit applicable to the generator is set, and (2) the counter reaches zero. In this case, the effect of the write is deferred until the end of the PWM cycle (when the counter reaches zero) following the end of all updates. This mode allows multiple items in multiple PWM generators to be updated simultaneously without odd effects during the update; everything runs from the old values until a point at which they all run from the new values. The Update mode of the load and comparator match values can be individually configured in each PWM generator block. It typically makes sense to use the synchronous update mechanism across PWM generator blocks when the timers in those blocks are synchronized, although this is not required in order for this mechanism to function properly.

The following registers provide either local or global synchronization based on the state of the **PWMnCTL** register `Update` bit value:

- Generator Registers: **PWMnLOAD**, **PWMnCMPA**, and **PWMnCMPB**

The following registers are provided with the optional functionality of synchronously updating rather than having all updates take immediate effect. The default update mode is immediate.

- Module-Level Register: **PWMENABLE**
- Generator Register: **PWMnGENA**, **PWMnGENB**, **PWMnDBCTL**, **PWMnDBRISE**, and **PWMnDBFALL**.

All other registers are considered statically provisioned for the execution of an application or are used dynamically for purposes unrelated to maintaining synchronization, and therefore, do not need synchronous update functionality.

15.3.7 Fault Conditions

A fault condition is one in which the controller must be signaled to stop normal PWM function and then sets the outputs to a safe state. There are two basic situations where this becomes necessary:

- The controller is stalled and cannot perform the necessary computation in the time required for motion control
- An external error or event is detected, such as an error

The PWM unit can use the following inputs to generate a fault condition, including:

- FAULTn pin assertion
- A stall of the controller generated by the debugger

Fault conditions are calculated on a per-PWM generator basis. Each PWM generator configures the necessary conditions to indicate a fault condition exists. This method allows the development of applications with dependent and independent control.

Each PWM generator's mode control, including fault condition handling, is provided in the **PWMnCTL** register. This register determines whether a single FAULT0 input is used (as previous Stellaris products support) or whether all FAULTn input signals may be used to generate a fault condition. This register allows the fault condition duration to last as long as the external condition lasts, or it may specify that the external condition be latched and the fault condition (and its effects) last until cleared by software. Finally, this register also enables a counter that may be used to extend the period of a fault condition for external events to assure that the duration is a minimum length. The minimum fault period count is specified in the **PWMnMINFLTPER** register.

These PWM generator registers provide status, control, and configure the fault condition in each PWM generator: **PWMnFLTSRC0**, **PWMnFLTSTAT0**, and **PWMnFLTSEN**.

There are up to four FAULT input pins (FAULT0-FAULT3). These pins may be used with circuits that generate an active High or active Low signal to indicate an error condition. Each of the FAULTn pins may be individually programmed for this logic sense using the **PWMnFLTSEN** register.

The **PWMnFLTSRC0** register define the contribution of the external fault sources. Using these registers, individual or groups of FAULTn signals are ORed together to specify the external fault generating conditions.

Status regarding the specific fault cause is provided in **PWMnFLTSTAT0**.

PWM generator fault conditions may be promoted to a controller interrupt using the **PWMINTEN** register.

During fault conditions, the PWM output signals usually require being driven to safe values so that external equipment may be safely controlled. To facilitate this, the **PWMFAULT** register is used to determine if the generated signal continues to be passed driven, or a specific fault condition encoding is driven on the PWM output, as specified in the **PWMFAULTVAL** register.

15.3.8 Output Control Block

With each PWM generator block producing two raw PWM signals, the output control block takes care of the final conditioning of the PWM signals before they go to the pins. Via a single register, the set of PWM signals that are actually enabled to the pins can be modified; this can be used, for example, to perform commutation of a brushless DC motor with a single register write (and without modifying the individual PWM generators, which are modified by the feedback control loop). Similarly, fault control can disable any of the PWM signals as well. A final inversion can be applied to any of the PWM signals, making them active Low instead of the default active High.

15.4 Initialization and Configuration

The following example shows how to initialize the PWM Generator 0 with a 25-KHz frequency, and with a 25% duty cycle on the PWM0 pin and a 75% duty cycle on the PWM1 pin. This example assumes the system clock is 20 MHz.

1. Enable the PWM clock by writing a value of 0x0010.0000 to the **RCGC0** register in the System Control module.
2. Enable the clock to the appropriate GPIO module via the **RCGC2** register in the System Control module.
3. In the GPIO module, enable the appropriate pins for their alternate function using the **GPIOAFSEL** register.
4. Configure the **Run-Mode Clock Configuration (RCC)** register in the System Control module to use the PWM divide (`USEPWMDIV`) and set the divider (`PWMDIV`) to divide by 2 (000).
5. Configure the PWM generator for countdown mode with immediate updates to the parameters.
   - Write the **PWM0CTL** register with a value of 0x0000.0000.
   - Write the **PWM0GENA** register with a value of 0x0000.008C.
   - Write the **PWM0GENB** register with a value of 0x0000.080C.
6. Set the period. For a 25-KHz frequency, the period = 1/25,000, or 40 microseconds. The PWM clock source is 10 MHz; the system clock divided by 2. This translates to 400 clock ticks per period. Use this value to set the **PWM0LOAD** register. In Count-Down mode, set the `Load` field in the **PWM0LOAD** register to the requested period minus one.
   - Write the **PWM0LOAD** register with a value of 0x0000.018F.
7. Set the pulse width of the `PWM0` pin for a 25% duty cycle.
   - Write the **PWM0CMPA** register with a value of 0x0000.012B.
8. Set the pulse width of the `PWM1` pin for a 75% duty cycle.
   - Write the **PWM0CMPB** register with a value of 0x0000.0063.
9. Start the timers in PWM generator 0.
   - Write the **PWM0CTL** register with a value of 0x0000.0001.
10. Enable PWM outputs.
   - Write the **PWMENABLE** register with a value of 0x0000.0003.

15.5 Register Map

Table 15-2 on page 604 lists the PWM registers. The offset listed is a hexadecimal increment to the register's address, relative to the PWM base address of 0x4002.8000. Note that the PWM module clock must be enabled before the registers can be programmed (see page 212). There must be a delay of 3 system clocks after the PWM module clock is enabled before any PWM module registers are accessed.

Table 15-2. PWM Register Map

Offset	Name	Type	Reset	Description	See page
0x000	PWMCTL	R/W	0x0000.0000	PWM Master Control	606
0x004	PWMSYNC	R/W	0x0000.0000	PWM Time Base Sync	607
0x008	PWMENABLE	R/W	0x0000.0000	PWM Output Enable	608
0x00C	PWMINVERT	R/W	0x0000.0000	PWM Output Inversion	609
0x010	PWMFAULT	R/W	0x0000.0000	PWM Output Fault	610
0x014	PWMINTEN	R/W	0x0000.0000	PWM Interrupt Enable	611
0x018	PWMRIS	RO	0x0000.0000	PWM Raw Interrupt Status	612
0x01C	PWMISC	R/W1C	0x0000.0000	PWM Interrupt Status and Clear	613
0x020	PWMSTATUS	RO	0x0000.0000	PWM Status	614
0x024	PWMFAULTVAL	R/W	0x0000.0000	PWM Fault Condition Value	615
0x040	PWM0CTL	R/W	0x0000.0000	PWM0 Control	616
0x044	PWM0INTEN	R/W	0x0000.0000	PWM0 Interrupt and Trigger Enable	621
0x048	PWM0RIS	RO	0x0000.0000	PWM0 Raw Interrupt Status	624
0x04C	PWM0ISC	R/W1C	0x0000.0000	PWM0 Interrupt Status and Clear	625
0x050	PWM0LOAD	R/W	0x0000.0000	PWM0 Load	626
0x054	PWM0COUNT	RO	0x0000.0000	PWM0 Counter	627
0x058	PWM0CMPA	R/W	0x0000.0000	PWM0 Compare A	628
0x05C	PWM0CMPB	R/W	0x0000.0000	PWM0 Compare B	629
0x060	PWM0GENA	R/W	0x0000.0000	PWM0 Generator A Control	630
0x064	PWM0GENB	R/W	0x0000.0000	PWM0 Generator B Control	633
0x068	PWM0DBCTL	R/W	0x0000.0000	PWM0 Dead-Band Control	636
0x06C	PWM0DBRISE	R/W	0x0000.0000	PWM0 Dead-Band Rising-Edge Delay	637
0x070	PWM0DBFALL	R/W	0x0000.0000	PWM0 Dead-Band Falling-Edge-Delay	638
0x074	PWM0FLTSRC0	R/W	0x0000.0000	PWM0 Fault Source 0	639
0x07C	PWM0MINFLTPER	R/W	0x0000.0000	PWM0 Minimum Fault Period	640
0x080	PWM1CTL	R/W	0x0000.0000	PWM1 Control	616
0x084	PWM1INTEN	R/W	0x0000.0000	PWM1 Interrupt and Trigger Enable	621
0x088	PWM1RIS	RO	0x0000.0000	PWM1 Raw Interrupt Status	624
0x08C	PWM1ISC	R/W1C	0x0000.0000	PWM1 Interrupt Status and Clear	625
0x090	PWM1LOAD	R/W	0x0000.0000	PWM1 Load	626
0x094	PWM1COUNT	RO	0x0000.0000	PWM1 Counter	627
0x098	PWM1CMPA	R/W	0x0000.0000	PWM1 Compare A	628

Table 15-2. PWM Register Map *(continued)*

Offset	Name	Type	Reset	Description	See page
0x09C	PWM1CMPB	R/W	0x0000.0000	PWM1 Compare B	629
0x0A0	PWM1GENA	R/W	0x0000.0000	PWM1 Generator A Control	630
0x0A4	PWM1GENB	R/W	0x0000.0000	PWM1 Generator B Control	633
0x0A8	PWM1DBCTL	R/W	0x0000.0000	PWM1 Dead-Band Control	636
0x0AC	PWM1DBRISE	R/W	0x0000.0000	PWM1 Dead-Band Rising-Edge Delay	637
0x0B0	PWM1DBFALL	R/W	0x0000.0000	PWM1 Dead-Band Falling-Edge-Delay	638
0x0B4	PWM1FLTSRC0	R/W	0x0000.0000	PWM1 Fault Source 0	639
0x0BC	PWM1MINFLTPER	R/W	0x0000.0000	PWM1 Minimum Fault Period	640
0x800	PWM0FLTSEN	R/W	0x0000.0000	PWM0 Fault Pin Logic Sense	641
0x804	PWM0FLTSTAT0	-	0x0000.0000	PWM0 Fault Status 0	642
0x880	PWM1FLTSEN	R/W	0x0000.0000	PWM1 Fault Pin Logic Sense	641
0x884	PWM1FLTSTAT0	-	0x0000.0000	PWM1 Fault Status 0	642

15.6 Register Descriptions

The remainder of this section lists and describes the PWM registers, in numerical order by address offset.

Register 1: PWM Master Control (PWMCTL), offset 0x000

This register provides master control over the PWM generation blocks.

PWM Master Control (PWMCTL)

Base 0x4002.8000
Offset 0x000
Type R/W, reset 0x0000.0000

	31	30	29	28	27	26	25	24	23	22	21	20	19	18	17	16
	reserved															
Type	RO	RO	RO	RO	RO	RO	RO	RO	RO	RO	RO	RO	RO	RO	RO	RO
Reset	0	0	0	0	0	0	0	0	0	0	0	0	0	0	0	0

	15	14	13	12	11	10	9	8	7	6	5	4	3	2	1	0
	reserved														GlobalSync1	GlobalSync0
Type	RO	RO	RO	RO	RO	RO	RO	RO	RO	RO	RO	RO	RO	RO	R/W	R/W
Reset	0	0	0	0	0	0	0	0	0	0	0	0	0	0	0	0

Bit/Field	Name	Type	Reset	Description
31:2	reserved	RO	0x00	Software should not rely on the value of a reserved bit. To provide compatibility with future products, the value of a reserved bit should be preserved across a read-modify-write operation.
1	GlobalSync1	R/W	0	Update PWM Generator 1 Same as `GlobalSync0` but for PWM generator 1.
0	GlobalSync0	R/W	0	Update PWM Generator 0 Setting this bit causes any queued update to a load or comparator register in PWM generator 0 to be applied the next time the corresponding counter becomes zero. This bit automatically clears when the updates have completed; it cannot be cleared by software.

Register 2: PWM Time Base Sync (PWMSYNC), offset 0x004

This register provides a method to perform synchronization of the counters in the PWM generation blocks. Writing a bit in this register to 1 causes the specified counter to reset back to 0; writing multiple bits resets multiple counters simultaneously. The bits auto-clear after the reset has occurred; reading them back as zero indicates that the synchronization has completed.

PWM Time Base Sync (PWMSYNC)

Base 0x4002.8000
Offset 0x004
Type R/W, reset 0x0000.0000

	31	30	29	28	27	26	25	24	23	22	21	20	19	18	17	16
	reserved															
Type	RO	RO	RO	RO	RO	RO	RO	RO	RO	RO	RO	RO	RO	RO	RO	RO
Reset	0	0	0	0	0	0	0	0	0	0	0	0	0	0	0	0

	15	14	13	12	11	10	9	8	7	6	5	4	3	2	1	0
	reserved														Sync1	Sync0
Type	RO	RO	RO	RO	RO	RO	RO	RO	RO	RO	RO	RO	RO	RO	R/W	R/W
Reset	0	0	0	0	0	0	0	0	0	0	0	0	0	0	0	0

Bit/Field	Name	Type	Reset	Description
31:2	reserved	RO	0x00	Software should not rely on the value of a reserved bit. To provide compatibility with future products, the value of a reserved bit should be preserved across a read-modify-write operation.
1	Sync1	R/W	0	Reset Generator 1 Counter Performs a reset of the PWM generator 1 counter.
0	Sync0	R/W	0	Reset Generator 0 Counter Performs a reset of the PWM generator 0 counter.

Register 3: PWM Output Enable (PWMENABLE), offset 0x008

This register provides a master control of which generated PWM signals are output to device pins. By disabling a PWM output, the generation process can continue (for example, when the time bases are synchronized) without driving PWM signals to the pins. When bits in this register are set, the corresponding PWM signal is passed through to the output stage, which is controlled by the **PWMINVERT** register. When bits are not set, the PWM signal is replaced by a zero value which is also passed to the output stage.

PWM Output Enable (PWMENABLE)

Base 0x4002.8000
Offset 0x008
Type R/W, reset 0x0000.0000

	31	30	29	28	27	26	25	24	23	22	21	20	19	18	17	16
	reserved															
Type	RO	RO	RO	RO	RO	RO	RO	RO	RO	RO	RO	RO	RO	RO	RO	RO
Reset	0	0	0	0	0	0	0	0	0	0	0	0	0	0	0	0

	15	14	13	12	11	10	9	8	7	6	5	4	3	2	1	0
	reserved												PWM3En	PWM2En	PWM1En	PWM0En
Type	RO	RO	RO	RO	RO	RO	RO	RO	RO	RO	RO	RO	R/W	R/W	R/W	R/W
Reset	0	0	0	0	0	0	0	0	0	0	0	0	0	0	0	0

Bit/Field	Name	Type	Reset	Description
31:4	reserved	RO	0x00	Software should not rely on the value of a reserved bit. To provide compatibility with future products, the value of a reserved bit should be preserved across a read-modify-write operation.
3	PWM3En	R/W	0	PWM3 Output Enable When set, allows the generated `PWM3` signal to be passed to the device pin.
2	PWM2En	R/W	0	PWM2 Output Enable When set, allows the generated `PWM2` signal to be passed to the device pin.
1	PWM1En	R/W	0	PWM1 Output Enable When set, allows the generated `PWM1` signal to be passed to the device pin.
0	PWM0En	R/W	0	PWM0 Output Enable When set, allows the generated `PWM0` signal to be passed to the device pin.

Register 4: PWM Output Inversion (PWMINVERT), offset 0x00C

This register provides a master control of the polarity of the PWM signals on the device pins. The PWM signals generated by the PWM generator are active High; they can optionally be made active Low via this register. Disabled PWM channels are also passed through the output inverter (if so configured) so that inactive channels maintain the correct polarity.

PWM Output Inversion (PWMINVERT)

Base 0x4002.8000
Offset 0x00C
Type R/W, reset 0x0000.0000

	31	30	29	28	27	26	25	24	23	22	21	20	19	18	17	16
	reserved															
Type	RO	RO	RO	RO	RO	RO	RO	RO	RO	RO	RO	RO	RO	RO	RO	RO
Reset	0	0	0	0	0	0	0	0	0	0	0	0	0	0	0	0

	15	14	13	12	11	10	9	8	7	6	5	4	3	2	1	0
	reserved												PWM3Inv	PWM2Inv	PWM1Inv	PWM0Inv
Type	RO	RO	RO	RO	RO	RO	RO	RO	RO	RO	RO	RO	R/W	R/W	R/W	R/W
Reset	0	0	0	0	0	0	0	0	0	0	0	0	0	0	0	0

Bit/Field	Name	Type	Reset	Description
31:4	reserved	RO	0x00	Software should not rely on the value of a reserved bit. To provide compatibility with future products, the value of a reserved bit should be preserved across a read-modify-write operation.
3	PWM3Inv	R/W	0	Invert `PWM3` Signal When set, the generated `PWM3` signal is inverted.
2	PWM2Inv	R/W	0	Invert `PWM2` Signal When set, the generated `PWM2` signal is inverted.
1	PWM1Inv	R/W	0	Invert `PWM1` Signal When set, the generated `PWM1` signal is inverted.
0	PWM0Inv	R/W	0	Invert `PWM0` Signal When set, the generated `PWM0` signal is inverted.

Register 5: PWM Output Fault (PWMFAULT), offset 0x010

This register controls the behavior of the PWM outputs in the presence of fault conditions. Both the fault inputs and debug events are considered fault conditions. On a fault condition, each PWM signal can be passed through unmodified or driven to a specified value. For outputs that are configured for pass-through, the debug event handling on the corresponding PWM generator also determines if the PWM signal continues to be generated.

Fault condition control occurs before the output inverter, so PWM signals driven to a specified value on fault are inverted if the channel is configured for inversion (therefore, the pin is driven to the logical complement of the specified value on a fault condition).

PWM Output Fault (PWMFAULT)

Base 0x4002.8000
Offset 0x010
Type R/W, reset 0x0000.0000

	31	30	29	28	27	26	25	24	23	22	21	20	19	18	17	16
	reserved															
Type	RO	RO	RO	RO	RO	RO	RO	RO	RO	RO	RO	RO	RO	RO	RO	RO
Reset	0	0	0	0	0	0	0	0	0	0	0	0	0	0	0	0

	15	14	13	12	11	10	9	8	7	6	5	4	3	2	1	0
	reserved												Fault3	Fault2	Fault1	Fault0
Type	RO	RO	RO	RO	RO	RO	RO	RO	RO	RO	RO	RO	R/W	R/W	R/W	R/W
Reset	0	0	0	0	0	0	0	0	0	0	0	0	0	0	0	0

Bit/Field	Name	Type	Reset	Description
31:4	reserved	RO	0x00	Software should not rely on the value of a reserved bit. To provide compatibility with future products, the value of a reserved bit should be preserved across a read-modify-write operation.
3	Fault3	R/W	0	PWM3 Fault When set, the `PWM3` output signal is driven to a specified value on a fault condition.
2	Fault2	R/W	0	PWM2 Fault When set, the `PWM2` output signal is driven to a specified value on a fault condition.
1	Fault1	R/W	0	PWM1 Fault When set, the `PWM1` output signal is driven to a specified value on a fault condition.
0	Fault0	R/W	0	PWM0 Fault When set, the `PWM0` output signal is driven to a specified value on a fault condition.

Register 6: PWM Interrupt Enable (PWMINTEN), offset 0x014

This register controls the global interrupt generation capabilities of the PWM module. The events that can cause an interrupt are the fault input and the individual interrupts from the PWM generators.

PWM Interrupt Enable (PWMINTEN)

Base 0x4002.8000
Offset 0x014
Type R/W, reset 0x0000.0000

	31	30	29	28	27	26	25	24	23	22	21	20	19	18	17	16
	reserved														IntFault1	IntFault0
Type	RO	RO	RO	RO	RO	RO	RO	RO	RO	RO	RO	RO	RO	RO	R/W	R/W
Reset	0	0	0	0	0	0	0	0	0	0	0	0	0	0	0	0

	15	14	13	12	11	10	9	8	7	6	5	4	3	2	1	0
	reserved														IntPWM1	IntPWM0
Type	RO	RO	RO	RO	RO	RO	RO	RO	RO	RO	RO	RO	RO	RO	R/W	R/W
Reset	0	0	0	0	0	0	0	0	0	0	0	0	0	0	0	0

Bit/Field	Name	Type	Reset	Description
31:18	reserved	RO	0x00	Software should not rely on the value of a reserved bit. To provide compatibility with future products, the value of a reserved bit should be preserved across a read-modify-write operation.
17	IntFault1	R/W	0	Interrupt Fault 1 When set, an interrupt occurs when the fault condition for PWM generator 1 is asserted.
16	IntFault0	R/W	0	Interrupt Fault 0 When set, an interrupt occurs when the `FAULT0` input is asserted or the fault condition for PWM generator 0 is asserted.
15:2	reserved	RO	0x00	Software should not rely on the value of a reserved bit. To provide compatibility with future products, the value of a reserved bit should be preserved across a read-modify-write operation.
1	IntPWM1	R/W	0	PWM1 Interrupt Enable When set, an interrupt occurs when the PWM generator 1 block asserts an interrupt.
0	IntPWM0	R/W	0	PWM0 Interrupt Enable When set, an interrupt occurs when the PWM generator 0 block asserts an interrupt.

Register 7: PWM Raw Interrupt Status (PWMRIS), offset 0x018

This register provides the current set of interrupt sources that are asserted, regardless of whether they cause an interrupt to be asserted to the controller. The fault interrupt is latched on detection; it must be cleared through the **PWM Interrupt Status and Clear (PWMISC)** register (see page 613). The PWM generator interrupts simply reflect the status of the PWM generators; they are cleared via the interrupt status register in the PWM generator blocks. Bits set to 1 indicate the events that are active; zero bits indicate that the event in question is not active.

PWM Raw Interrupt Status (PWMRIS)

Base 0x4002.8000
Offset 0x018
Type RO, reset 0x0000.0000

	31	30	29	28	27	26	25	24	23	22	21	20	19	18	17	16
	reserved														IntFault1	IntFault0
Type	RO	RO	RO	RO	RO	RO	RO	RO	RO	RO	RO	RO	RO	RO	RO	RO
Reset	0	0	0	0	0	0	0	0	0	0	0	0	0	0	0	0

	15	14	13	12	11	10	9	8	7	6	5	4	3	2	1	0
	reserved														IntPWM1	IntPWM0
Type	RO	RO	RO	RO	RO	RO	RO	RO	RO	RO	RO	RO	RO	RO	RO	RO
Reset	0	0	0	0	0	0	0	0	0	0	0	0	0	0	0	0

Bit/Field	Name	Type	Reset	Description
31:18	reserved	RO	0x00	Software should not rely on the value of a reserved bit. To provide compatibility with future products, the value of a reserved bit should be preserved across a read-modify-write operation.
17	IntFault1	RO	0	Interrupt Fault PWM 1 Indicates that the fault condition for PWM generator 1 is asserting.
16	IntFault0	RO	0	Interrupt Fault PWM 0 Indicates that the `FAULT0` input is asserting or the fault condition for PWM generator 0 is asserting.
15:2	reserved	RO	0x00	Software should not rely on the value of a reserved bit. To provide compatibility with future products, the value of a reserved bit should be preserved across a read-modify-write operation.
1	IntPWM1	RO	0	PWM1 Interrupt Asserted Indicates that the PWM generator 1 block is asserting its interrupt.
0	IntPWM0	RO	0	PWM0 Interrupt Asserted Indicates that the PWM generator 0 block is asserting its interrupt.

Register 8: PWM Interrupt Status and Clear (PWMISC), offset 0x01C

This register provides a summary of the interrupt status of the individual PWM generator blocks. A bit set to 1 indicates that the corresponding generator block is asserting an interrupt. The individual interrupt status registers in each block must be consulted to determine the reason for the interrupt, and used to clear the interrupt. For the fault interrupt, a write of 1 to that bit position clears the latched interrupt status.

PWM Interrupt Status and Clear (PWMISC)

Base 0x4002.8000
Offset 0x01C
Type R/W1C, reset 0x0000.0000

	31	30	29	28	27	26	25	24	23	22	21	20	19	18	17	16
	reserved														IntFault1	IntFault0
Type	RO	RO	RO	RO	RO	RO	RO	RO	RO	RO	RO	RO	RO	RO	R/W1C	R/W1C
Reset	0	0	0	0	0	0	0	0	0	0	0	0	0	0	0	0

	15	14	13	12	11	10	9	8	7	6	5	4	3	2	1	0
	reserved														IntPWM1	IntPWM0
Type	RO	RO	RO	RO	RO	RO	RO	RO	RO	RO	RO	RO	RO	RO	RO	RO
Reset	0	0	0	0	0	0	0	0	0	0	0	0	0	0	0	0

Bit/Field	Name	Type	Reset	Description
31:18	reserved	RO	0x00	Software should not rely on the value of a reserved bit. To provide compatibility with future products, the value of a reserved bit should be preserved across a read-modify-write operation.
17	IntFault1	R/W1C	0	`FAULT1` Interrupt Asserted Indicates that the `FAULT1` input is asserting or the `FAULT1` latch has captured an assertion.
16	IntFault0	R/W1C	0	`FAULT0` Interrupt Asserted Indicates that the `FAULT0` input is asserting or the fault condition for generator 0 is assertng a fault.
15:2	reserved	RO	0x00	Software should not rely on the value of a reserved bit. To provide compatibility with future products, the value of a reserved bit should be preserved across a read-modify-write operation.
1	IntPWM1	RO	0	PWM1 Interrupt Status Indicates if the PWM generator 1 block is asserting an interrupt.
0	IntPWM0	RO	0	PWM0 Interrupt Status Indicates if the PWM generator 0 block is asserting an interrupt.

Register 9: PWM Status (PWMSTATUS), offset 0x020

This register provides the status of the FAULT input signals.

PWM Status (PWMSTATUS)

Base 0x4002.8000
Offset 0x020
Type RO, reset 0x0000.0000

	31	30	29	28	27	26	25	24	23	22	21	20	19	18	17	16
	reserved															
Type	RO	RO	RO	RO	RO	RO	RO	RO	RO	RO	RO	RO	RO	RO	RO	RO
Reset	0	0	0	0	0	0	0	0	0	0	0	0	0	0	0	0

	15	14	13	12	11	10	9	8	7	6	5	4	3	2	1	0
	reserved														Fault1	Fault0
Type	RO	RO	RO	RO	RO	RO	RO	RO	RO	RO	RO	RO	RO	RO	RO	RO
Reset	0	0	0	0	0	0	0	0	0	0	0	0	0	0	0	0

Bit/Field	Name	Type	Reset	Description
31:2	reserved	RO	0x00	Software should not rely on the value of a reserved bit. To provide compatibility with future products, the value of a reserved bit should be preserved across a read-modify-write operation.
1	Fault1	RO	0	Fault1 Interrupt Status When set, indicates the fault condition for PWM generator 1 is asserted.
0	Fault0	RO	0	Fault0 Interrupt Status When set, indicates the FAULT0 input is asserted, or that the fault condition for PWM generator 0 is asserted.

Register 10: PWM Fault Condition Value (PWMFAULTVAL), offset 0x024

This register specifies the output value driven on the PWM signals during a fault condition if the corresponding bit in the **PWMFAULT** register is indicating that the PWM signal drives a value.

PWM Fault Condition Value (PWMFAULTVAL)

Base 0x4002.8000
Offset 0x024
Type R/W, reset 0x0000.0000

	31	30	29	28	27	26	25	24	23	22	21	20	19	18	17	16
	reserved															
Type	RO	RO	RO	RO	RO	RO	RO	RO	RO	RO	RO	RO	RO	RO	RO	RO
Reset	0	0	0	0	0	0	0	0	0	0	0	0	0	0	0	0

	15	14	13	12	11	10	9	8	7	6	5	4	3	2	1	0
	reserved												PWM3	PWM2	PWM1	PWM0
Type	RO	RO	RO	RO	RO	RO	RO	RO	RO	RO	RO	RO	R/W	R/W	R/W	R/W
Reset	0	0	0	0	0	0	0	0	0	0	0	0	0	0	0	0

Bit/Field	Name	Type	Reset	Description
31:4	reserved	RO	0x00	Software should not rely on the value of a reserved bit. To provide compatibility with future products, the value of a reserved bit should be preserved across a read-modify-write operation.
3	PWM3	R/W	0	PWM3 Fault Value The `PWM3` output signal is driven to the value specified in this bit during fault conditions if the `Fault3` bit in the **PWMFAULT** register is set.
2	PWM2	R/W	0	PWM2 Fault Value The `PWM2` output signal is driven to the value specified in this bit during fault conditions if the `Fault2` bit in the **PWMFAULT** register is set.
1	PWM1	R/W	0	PWM1 Fault Value The `PWM1` output signal is driven to the value specified in this bit during fault conditions if the `Fault1` bit in the **PWMFAULT** register is set.
0	PWM0	R/W	0	PWM0 Fault Value The `PWM0` output signal is driven to the value specified in this bit during fault conditions if the `Fault0` bit in the **PWMFAULT** register is set.

Register 11: PWM0 Control (PWM0CTL), offset 0x040

Register 12: PWM1 Control (PWM1CTL), offset 0x080

These registers configure the PWM signal generation blocks (PWM0CTL controls the PWM generator 0 block, and so on). The Register Update mode, Debug mode, Counting mode, and Block Enable mode are all controlled via these registers. The blocks produce the PWM signals, which can be either two independent PWM signals (from the same counter), or a paired set of PWM signals with dead-band delays added.

The PWM0 block produces the `PWM0` and `PWM1` outputs, and the PWM1 block produces the `PWM2` and `PWM3` outputs.

PWM0 Control (PWM0CTL)

Base 0x4002.8000
Offset 0x040
Type R/W, reset 0x0000.0000

	31	30	29	28	27	26	25	24	23	22	21	20	19	18	17	16
	reserved													LATCH	MINFLTPER	FLTSRC
Type	RO	RO	RO	RO	RO	RO	RO	RO	RO	RO	RO	RO	RO	R/W	R/W	R/W
Reset	0	0	0	0	0	0	0	0	0	0	0	0	0	0	0	0

	15	14	13	12	11	10	9	8	7	6	5	4	3	2	1	0
	DBFallUpd		DBRiseUpd		DBCtlUpd		GenBUpd		GenAUpd		CmpBUpd	CmpAUpd	LoadUpd	Debug	Mode	Enable
Type	R/W	R/W	R/W	R/W	R/W	R/W	R/W	R/W	R/W	R/W	R/W	R/W	R/W	R/W	R/W	R/W
Reset	0	0	0	0	0	0	0	0	0	0	0	0	0	0	0	0

Bit/Field	Name	Type	Reset	Description
31:19	reserved	RO	0x00	Software should not rely on the value of a reserved bit. To provide compatibility with future products, the value of a reserved bit should be preserved across a read-modify-write operation.
18	LATCH	R/W	0	Latch Fault Input This bit controls the behavior of the fault condition in a PWM generator. The fault condition may be latched and internally asserted because the fault condition logic includes the generator's `IntFaultn` bit (of the **PWMISC** register) enabled by the `LATCH` bit. Therefore, if the **PWMINTEN** `IntFaultn` bit is set, a fault condition sets the **PWMISC** `IntFaultn` bit (generating an interrupt) and the fault condition is extended in the generator logic until software clears the **PWMISC** `IntFaultn` bit. Value Description 0 Fault Condition Not Latched A fault condition is in effect for as long as the generating source is asserting. 1 Fault Condition Latched A fault condition is set as the result of the assertion of the faulting source and is held (latched) while the **PWMISC** `IntFaultn` bit is set. Clearing the `IntFaultn` bit clears the fault condition.

Bit/Field	Name	Type	Reset	Description
17	MINFLTPER	R/W	0	Minimum Fault Period This bit specifies that the PWM generator enables a one-shot counter to provide a minimum fault condition period. The timer begins counting on the rising edge of the fault condition to extend the condition for a minimum duration of the count value. The timer ignores the state of the fault condition while counting. The minimum fault delay is in effect only when the `MINFLTPER` bit is set. If a detected fault is in the process of being extended when the `MINFLTPER` bit is cleared, the fault condition extension is aborted. The delay time is specified by the **PWMnMINFLTPER** register `MFP` field value. The effect of this is to pulse stretch the fault condition input. The delay value is defined by the PWM clock period. Because the fault input is not synchronized to the PWM clock, the period of the time is PWMClock * (MFP value + 1) or PWMClock * (MFP value + 2). The delay function makes sense only if the fault source is unlatched. A latched fault source makes the fault condition appear asserted until cleared by software and negates the utility of the extend feature. It applies to all fault condition sources as specified in the `FLTSRC` field. Value — Description 0 — Fault Condition Period Not Extended The FAULT input deassertion is unaffected. 1 — Fault Condition Period Extended The **PWMnMINFLTPER** one-shot counter is active and extends the period of the fault condition to a minimum period.
16	FLTSRC	R/W	0	Fault Condition Source This bit specifies the fault condition source. Value — Description 0 — Fault0 The Fault condition is determined by the Fault0 input. 1 — Register-Defined The Fault condition is determined by the configuration of the **PWMnFLTSRC0** register.

Bit/Field	Name	Type	Reset	Description
15:14	DBFallUpd	R/W	0	**PWMnDBFALL** Update Mode Specifies the update mode for the **PWMnDBFALL** register. Value Description 0 Immediate The **PWMnDBFALL** register value is immediately updated on a write. 1 Reserved 2 Locally Synchronized Updates to the register are reflected to the generator the next time the counter is 0. 3 Globally Synchronized Updates to the register are delayed until the next time the counter is 0 after a synchronous update has been requested through the PWM Master Control (**PWMCTL**) register.
13:12	DBRiseUpd	R/W	0	**PWMnDBRISE** Update Mode Specifies the update mode for the **PWMnDBRISE** register. Value Description 0 Immediate The **PWMnDBRISE** register value is immediately updated on a write. 1 Reserved 2 Locally Synchronized Updates to the register are reflected to the generator the next time the counter is 0. 3 Globally Synchronized Updates to the register are delayed until the next time the counter is 0 after a synchronous update has been requested through the PWM Master Control (**PWMCTL**) register.
11:10	DBCtlUpd	R/W	0	**PWMnDBCTL** Update Mode Specifies the update mode for the **PWMnDBCTL** register. Value Description 0 Immediate The **PWMnDBCTL** register value is immediately updated on a write. 1 Reserved 2 Locally Synchronized Updates to the register are reflected to the generator the next time the counter is 0. 3 Globally Synchronized Updates to the register are delayed until the next time the counter is 0 after a synchronous update has been requested through the PWM Master Control (**PWMCTL**) register.

Bit/Field	Name	Type	Reset	Description
9:8	GenBUpd	R/W	0	**PWMnGENB** Update Mode Specifies the update mode for the **PWMnGENB** register. Value Description 0 Immediate The **PWMnGENB** register value is immediately updated on a write. 1 Reserved 2 Locally Synchronized Updates to the register are reflected to the generator the next time the counter is 0. 3 Globally Synchronized Updates to the register are delayed until the next time the counter is 0 after a synchronous update has been requested through the PWM Master Control (**PWMCTL**) register.
7:6	GenAUpd	R/W	0	**PWMnGENA** Update Mode Specifies the update mode for the **PWMnGENA** register. Value Description 0 Immediate The **PWMnGENA** register value is immediately updated on a write. 1 Reserved 2 Locally Synchronized Updates to the register are reflected to the generator the next time the counter is 0. 3 Globally Synchronized Updates to the register are delayed until the next time the counter is 0 after a synchronous update has been requested through the PWM Master Control (**PWMCTL**) register.
5	CmpBUpd	R/W	0	Comparator B Update Mode Same as `CmpAUpd` but for the comparator B register.
4	CmpAUpd	R/W	0	Comparator A Update Mode The Update mode for the comparator A register. When not set, updates to the register are reflected to the comparator the next time the counter is 0. When set, updates to the register are delayed until the next time the counter is 0 after a synchronous update has been requested through the **PWM Master Control (PWMCTL)** register (see page 606).
3	LoadUpd	R/W	0	Load Register Update Mode The Update mode for the load register. When not set, updates to the register are reflected to the counter the next time the counter is 0. When set, updates to the register are delayed until the next time the counter is 0 after a synchronous update has been requested through the **PWM Master Control (PWMCTL)** register.

Bit/Field	Name	Type	Reset	Description
2	Debug	R/W	0	Debug Mode The behavior of the counter in Debug mode. When not set, the counter stops running when it next reaches 0, and continues running again when no longer in Debug mode. When set, the counter always runs.
1	Mode	R/W	0	Counter Mode The mode for the counter. When not set, the counter counts down from the load value to 0 and then wraps back to the load value (Count-Down mode). When set, the counter counts up from 0 to the load value, back down to 0, and then repeats (Count-Up/Down mode).
0	Enable	R/W	0	PWM Block Enable Master enable for the PWM generation block. When not set, the entire block is disabled and not clocked. When set, the block is enabled and produces PWM signals.

Register 13: PWM0 Interrupt and Trigger Enable (PWM0INTEN), offset 0x044

Register 14: PWM1 Interrupt and Trigger Enable (PWM1INTEN), offset 0x084

These registers control the interrupt and ADC trigger generation capabilities of the PWM generators (**PWM0INTEN** controls the PWM generator 0 block, and so on). The events that can cause an interrupt or an ADC trigger are:

- The counter being equal to the load register
- The counter being equal to zero
- The counter being equal to the comparator A register while counting up
- The counter being equal to the comparator A register while counting down
- The counter being equal to the comparator B register while counting up
- The counter being equal to the comparator B register while counting down

Any combination of these events can generate either an interrupt, or an ADC trigger; though no determination can be made as to the actual event that caused an ADC trigger if more than one is specified.

PWM0 Interrupt and Trigger Enable (PWM0INTEN)

Base 0x4002.8000
Offset 0x044
Type R/W, reset 0x0000.0000

	31	30	29	28	27	26	25	24	23	22	21	20	19	18	17	16
	reserved															
Type	RO	RO	RO	RO	RO	RO	RO	RO	RO	RO	RO	RO	RO	RO	RO	RO
Reset	0	0	0	0	0	0	0	0	0	0	0	0	0	0	0	0

	15	14	13	12	11	10	9	8	7	6	5	4	3	2	1	0
	reserved		TrCmpBD	TrCmpBU	TrCmpAD	TrCmpAU	TrCntLoad	TrCntZero	reserved		IntCmpBD	IntCmpBU	IntCmpAD	IntCmpAU	IntCntLoad	IntCntZero
Type	RO	RO	R/W	R/W	R/W	R/W	R/W	R/W	RO	RO	R/W	R/W	R/W	R/W	R/W	R/W
Reset	0	0	0	0	0	0	0	0	0	0	0	0	0	0	0	0

Bit/Field	Name	Type	Reset	Description
31:14	reserved	RO	0x00	Software should not rely on the value of a reserved bit. To provide compatibility with future products, the value of a reserved bit should be preserved across a read-modify-write operation.
13	TrCmpBD	R/W	0	Trigger for Counter=Comparator B Down Value Description 1 An ADC trigger pulse is output when the counter matches the value in the **PWMnCMPB** register value while counting down. 0 No ADC trigger is output.

Bit/Field	Name	Type	Reset	Description
12	TrCmpBU	R/W	0	Trigger for Counter=Comparator B Up Value Description 1 An ADC trigger pulse is output when the counter matches the value in the **PWMnCMPB** register value while counting up. 0 No ADC trigger is output.
11	TrCmpAD	R/W	0	Trigger for Counter=Comparator A Down Value Description 1 An ADC trigger pulse is output when the counter matches the value in the **PWMnCMPA** register value while counting down. 0 No ADC trigger is output.
10	TrCmpAU	R/W	0	Trigger for Counter=Comparator A Up Value Description 1 An ADC trigger pulse is output when the counter matches the value in the **PWMnCMPA** register value while counting up. 0 No ADC trigger is output.
9	TrCntLoad	R/W	0	Trigger for Counter=Load Value Description 1 An ADC trigger pulse is output when the counter matches the **PWMnLOAD** register. 0 No ADC trigger is output.
8	TrCntZero	R/W	0	Trigger for Counter=0 Value Description 1 An ADC trigger pulse is output when the counter is 0. 0 No ADC trigger is output.
7:6	reserved	RO	0x0	Software should not rely on the value of a reserved bit. To provide compatibility with future products, the value of a reserved bit should be preserved across a read-modify-write operation.
5	IntCmpBD	R/W	0	Interrupt for Counter=Comparator B Down Value Description 1 A raw interrupt occurs when the counter matches the value in the **PWMnCMPB** register value while counting down. 0 No interrupt.

Bit/Field	Name	Type	Reset	Description
4	IntCmpBU	R/W	0	Interrupt for Counter=Comparator B Up Value Description 1 A raw interrupt occurs when the counter matches the value in the **PWMnCMPB** register value while counting up. 0 No interrupt.
3	IntCmpAD	R/W	0	Interrupt for Counter=Comparator A Down Value Description 1 A raw interrupt occurs when the counter matches the value in the **PWMnCMPA** register value while counting down. 0 No interrupt.
2	IntCmpAU	R/W	0	Interrupt for Counter=Comparator A Up Value Description 1 A raw interrupt occurs when the counter matches the value in the **PWMnCMPA** register value while counting up. 0 No interrupt.
1	IntCntLoad	R/W	0	Interrupt for Counter=Load Value Description 1 A raw interrupt occurs when the counter matches the value in the **PWMnLOAD** register value. 0 No interrupt.
0	IntCntZero	R/W	0	Interrupt for Counter=0 Value Description 1 A raw interrupt occurs when the counter is zero. 0 No interrupt.

Register 15: PWM0 Raw Interrupt Status (PWM0RIS), offset 0x048

Register 16: PWM1 Raw Interrupt Status (PWM1RIS), offset 0x088

These registers provide the current set of interrupt sources that are asserted, regardless of whether they cause an interrupt to be asserted to the controller (**PWM0RIS** controls the PWM generator 0 block, and so on). Bits set to 1 indicate the latched events that have occurred; bits set to 0 indicate that the event in question has not occurred.

PWM0 Raw Interrupt Status (PWM0RIS)

Base 0x4002.8000
Offset 0x048
Type RO, reset 0x0000.0000

	31	30	29	28	27	26	25	24	23	22	21	20	19	18	17	16
	reserved															
Type	RO	RO	RO	RO	RO	RO	RO	RO	RO	RO	RO	RO	RO	RO	RO	RO
Reset	0	0	0	0	0	0	0	0	0	0	0	0	0	0	0	0

	15	14	13	12	11	10	9	8	7	6	5	4	3	2	1	0
	reserved										IntCmpBD	IntCmpBU	IntCmpAD	IntCmpAU	IntCntLoad	IntCntZero
Type	RO	RO	RO	RO	RO	RO	RO	RO	RO	RO	RO	RO	RO	RO	RO	RO
Reset	0	0	0	0	0	0	0	0	0	0	0	0	0	0	0	0

Bit/Field	Name	Type	Reset	Description
31:6	reserved	RO	0x00	Software should not rely on the value of a reserved bit. To provide compatibility with future products, the value of a reserved bit should be preserved across a read-modify-write operation.
5	IntCmpBD	RO	0	Comparator B Down Interrupt Status Indicates that the counter has matched the comparator B value while counting down.
4	IntCmpBU	RO	0	Comparator B Up Interrupt Status Indicates that the counter has matched the comparator B value while counting up.
3	IntCmpAD	RO	0	Comparator A Down Interrupt Status Indicates that the counter has matched the comparator A value while counting down.
2	IntCmpAU	RO	0	Comparator A Up Interrupt Status Indicates that the counter has matched the comparator A value while counting up.
1	IntCntLoad	RO	0	Counter=Load Interrupt Status Indicates that the counter has matched the **PWMnLOAD** register.
0	IntCntZero	RO	0	Counter=0 Interrupt Status Indicates that the counter has matched 0.

Register 17: PWM0 Interrupt Status and Clear (PWM0ISC), offset 0x04C

Register 18: PWM1 Interrupt Status and Clear (PWM1ISC), offset 0x08C

These registers provide the current set of interrupt sources that are asserted to the controller (**PWM0ISC** controls the PWM generator 0 block, and so on). Bits set to 1 indicate the latched events that have occurred; bits set to 0 indicate that the event in question has not occurred. These are R/W1C registers; writing a 1 to a bit position clears the corresponding interrupt reason.

PWM0 Interrupt Status and Clear (PWM0ISC)

Base 0x4002.8000
Offset 0x04C
Type R/W1C, reset 0x0000.0000

	31	30	29	28	27	26	25	24	23	22	21	20	19	18	17	16
	reserved															
Type	RO	RO	RO	RO	RO	RO	RO	RO	RO	RO	RO	RO	RO	RO	RO	RO
Reset	0	0	0	0	0	0	0	0	0	0	0	0	0	0	0	0

	15	14	13	12	11	10	9	8	7	6	5	4	3	2	1	0
	reserved										IntCmpBD	IntCmpBU	IntCmpAD	IntCmpAU	IntCntLoad	IntCntZero
Type	RO	RO	RO	RO	RO	RO	RO	RO	RO	RO	R/W1C	R/W1C	R/W1C	R/W1C	R/W1C	R/W1C
Reset	0	0	0	0	0	0	0	0	0	0	0	0	0	0	0	0

Bit/Field	Name	Type	Reset	Description
31:6	reserved	RO	0x00	Software should not rely on the value of a reserved bit. To provide compatibility with future products, the value of a reserved bit should be preserved across a read-modify-write operation.
5	IntCmpBD	R/W1C	0	Comparator B Down Interrupt Indicates that the counter has matched the comparator B value while counting down.
4	IntCmpBU	R/W1C	0	Comparator B Up Interrupt Indicates that the counter has matched the comparator B value while counting up.
3	IntCmpAD	R/W1C	0	Comparator A Down Interrupt Indicates that the counter has matched the comparator A value while counting down.
2	IntCmpAU	R/W1C	0	Comparator A Up Interrupt Indicates that the counter has matched the comparator A value while counting up.
1	IntCntLoad	R/W1C	0	Counter=Load Interrupt Indicates that the counter has matched the **PWMnLOAD** register.
0	IntCntZero	R/W1C	0	Counter=0 Interrupt Indicates that the counter has matched 0.

Register 19: PWM0 Load (PWM0LOAD), offset 0x050

Register 20: PWM1 Load (PWM1LOAD), offset 0x090

These registers contain the load value for the PWM counter (**PWM0LOAD** controls the PWM generator 0 block, and so on). Based on the counter mode, either this value is loaded into the counter after it reaches zero, or it is the limit of up-counting after which the counter decrements back to zero.

If the Load Value Update mode is immediate, this value is used the next time the counter reaches zero; if the mode is synchronous, it is used the next time the counter reaches zero after a synchronous update has been requested through the **PWM Master Control (PWMCTL)** register (see page 606). If this register is re-written before the actual update occurs, the previous value is never used and is lost.

PWM0 Load (PWM0LOAD)

Base 0x4002.8000
Offset 0x050
Type R/W, reset 0x0000.0000

	31	30	29	28	27	26	25	24	23	22	21	20	19	18	17	16
	reserved															
Type	RO	RO	RO	RO	RO	RO	RO	RO	RO	RO	RO	RO	RO	RO	RO	RO
Reset	0	0	0	0	0	0	0	0	0	0	0	0	0	0	0	0

	15	14	13	12	11	10	9	8	7	6	5	4	3	2	1	0
	Load															
Type	R/W	R/W	R/W	R/W	R/W	R/W	R/W	R/W	R/W	R/W	R/W	R/W	R/W	R/W	R/W	R/W
Reset	0	0	0	0	0	0	0	0	0	0	0	0	0	0	0	0

Bit/Field	Name	Type	Reset	Description
31:16	reserved	RO	0x00	Software should not rely on the value of a reserved bit. To provide compatibility with future products, the value of a reserved bit should be preserved across a read-modify-write operation.
15:0	Load	R/W	0	Counter Load Value The counter load value.

Register 21: PWM0 Counter (PWM0COUNT), offset 0x054

Register 22: PWM1 Counter (PWM1COUNT), offset 0x094

These registers contain the current value of the PWM counter (**PWM0COUNT** is the value of the PWM generator 0 block, and so on). When this value matches the load register, a pulse is output; this can drive the generation of a PWM signal (via the **PWMnGENA/PWMnGENB** registers, see page 630 and page 633) or drive an interrupt or ADC trigger (via the **PWMnINTEN** register, see page 621). A pulse with the same capabilities is generated when this value is zero.

PWM0 Counter (PWM0COUNT)

Base 0x4002.8000
Offset 0x054
Type RO, reset 0x0000.0000

	31	30	29	28	27	26	25	24	23	22	21	20	19	18	17	16
	reserved															
Type	RO	RO	RO	RO	RO	RO	RO	RO	RO	RO	RO	RO	RO	RO	RO	RO
Reset	0	0	0	0	0	0	0	0	0	0	0	0	0	0	0	0

	15	14	13	12	11	10	9	8	7	6	5	4	3	2	1	0
	Count															
Type	RO	RO	RO	RO	RO	RO	RO	RO	RO	RO	RO	RO	RO	RO	RO	RO
Reset	0	0	0	0	0	0	0	0	0	0	0	0	0	0	0	0

Bit/Field	Name	Type	Reset	Description
31:16	reserved	RO	0x00	Software should not rely on the value of a reserved bit. To provide compatibility with future products, the value of a reserved bit should be preserved across a read-modify-write operation.
15:0	Count	RO	0x00	Counter Value The current value of the counter.

Register 23: PWM0 Compare A (PWM0CMPA), offset 0x058

Register 24: PWM1 Compare A (PWM1CMPA), offset 0x098

These registers contain a value to be compared against the counter (**PWM0CMPA** controls the PWM generator 0 block, and so on). When this value matches the counter, a pulse is output; this can drive the generation of a PWM signal (via the **PWMnGENA/PWMnGENB** registers) or drive an interrupt or ADC trigger (via the **PWMnINTEN** register). If the value of this register is greater than the **PWMnLOAD** register (see page 626), then no pulse is ever output.

If the comparator A update mode is immediate (based on the `CmpAUpd` bit in the **PWMnCTL** register), this 16-bit `CompA` value is used the next time the counter reaches zero. If the update mode is synchronous, it is used the next time the counter reaches zero after a synchronous update has been requested through the **PWM Master Control (PWMCTL)** register (see page 606). If this register is rewritten before the actual update occurs, the previous value is never used and is lost.

PWM0 Compare A (PWM0CMPA)

Base 0x4002.8000
Offset 0x058
Type R/W, reset 0x0000.0000

	31	30	29	28	27	26	25	24	23	22	21	20	19	18	17	16
	reserved															
Type	RO	RO	RO	RO	RO	RO	RO	RO	RO	RO	RO	RO	RO	RO	RO	RO
Reset	0	0	0	0	0	0	0	0	0	0	0	0	0	0	0	0

	15	14	13	12	11	10	9	8	7	6	5	4	3	2	1	0
	CompA															
Type	R/W	R/W	R/W	R/W	R/W	R/W	R/W	R/W	R/W	R/W	R/W	R/W	R/W	R/W	R/W	R/W
Reset	0	0	0	0	0	0	0	0	0	0	0	0	0	0	0	0

Bit/Field	Name	Type	Reset	Description
31:16	reserved	RO	0x00	Software should not rely on the value of a reserved bit. To provide compatibility with future products, the value of a reserved bit should be preserved across a read-modify-write operation.
15:0	CompA	R/W	0x00	Comparator A Value The value to be compared against the counter.

Register 25: PWM0 Compare B (PWM0CMPB), offset 0x05C

Register 26: PWM1 Compare B (PWM1CMPB), offset 0x09C

These registers contain a value to be compared against the counter (**PWM0CMPB** controls the PWM generator 0 block, and so on). When this value matches the counter, a pulse is output; this can drive the generation of a PWM signal (via the **PWMnGENA/PWMnGENB** registers) or drive an interrupt or ADC trigger (via the **PWMnINTEN** register). If the value of this register is greater than the **PWMnLOAD** register, no pulse is ever output.

If the comparator B update mode is immediate (based on the `CmpBUpd` bit in the **PWMnCTL** register), this 16-bit `CompB` value is used the next time the counter reaches zero. If the update mode is synchronous, it is used the next time the counter reaches zero after a synchronous update has been requested through the **PWM Master Control (PWMCTL)** register (see page 606). If this register is rewritten before the actual update occurs, the previous value is never used and is lost.

PWM0 Compare B (PWM0CMPB)

Base 0x4002.8000
Offset 0x05C
Type R/W, reset 0x0000.0000

	31	30	29	28	27	26	25	24	23	22	21	20	19	18	17	16
	reserved															
Type	RO	RO	RO	RO	RO	RO	RO	RO	RO	RO	RO	RO	RO	RO	RO	RO
Reset	0	0	0	0	0	0	0	0	0	0	0	0	0	0	0	0

	15	14	13	12	11	10	9	8	7	6	5	4	3	2	1	0
	CompB															
Type	R/W	R/W	R/W	R/W	R/W	R/W	R/W	R/W	R/W	R/W	R/W	R/W	R/W	R/W	R/W	R/W
Reset	0	0	0	0	0	0	0	0	0	0	0	0	0	0	0	0

Bit/Field	Name	Type	Reset	Description
31:16	reserved	RO	0x00	Software should not rely on the value of a reserved bit. To provide compatibility with future products, the value of a reserved bit should be preserved across a read-modify-write operation.
15:0	CompB	R/W	0x00	Comparator B Value The value to be compared against the counter.

Register 27: PWM0 Generator A Control (PWM0GENA), offset 0x060

Register 28: PWM1 Generator A Control (PWM1GENA), offset 0x0A0

These registers control the generation of the `PWMnA` signal based on the load and zero output pulses from the counter, as well as the compare A and compare B pulses from the comparators (**PWM0GENA** controls the PWM generator 0 block, and so on). When the counter is running in Count-Down mode, only four of these events occur; when running in Count-Up/Down mode, all six occur. These events provide great flexibility in the positioning and duty cycle of the PWM signal that is produced.

The **PWM0GENA** register controls generation of the `PWM0A` signal; **PWM1GENA**, the `PWM1A` signal.

If a zero or load event coincides with a compare A or compare B event, the zero or load action is taken and the compare A or compare B action is ignored. If a compare A event coincides with a compare B event, the compare A action is taken and the compare B action is ignored.

If the Generator A update mode is immediate (based on the `GenAUpd` field encoding in the **PWMnCTL** register), this 16-bit `GenAUpd` value is used the next time the counter reaches zero. If the update mode is synchronous, it is used the next time the counter reaches zero after a synchronous update has been requested through the **PWM Master Control (PWMCTL)** register (see page 606). If this register is rewritten before the actual update occurs, the previous value is never used and is lost.

PWM0 Generator A Control (PWM0GENA)

Base 0x4002.8000
Offset 0x060
Type R/W, reset 0x0000.0000

	31	30	29	28	27	26	25	24	23	22	21	20	19	18	17	16
	reserved															
Type	RO	RO	RO	RO	RO	RO	RO	RO	RO	RO	RO	RO	RO	RO	RO	RO
Reset	0	0	0	0	0	0	0	0	0	0	0	0	0	0	0	0

	15	14	13	12	11	10	9	8	7	6	5	4	3	2	1	0
	reserved				ActCmpBD		ActCmpBU		ActCmpAD		ActCmpAU		ActLoad		ActZero	
Type	RO	RO	RO	RO	R/W	R/W	R/W	R/W	R/W	R/W	R/W	R/W	R/W	R/W	R/W	R/W
Reset	0	0	0	0	0	0	0	0	0	0	0	0	0	0	0	0

Bit/Field	Name	Type	Reset	Description
31:12	reserved	RO	0x00	Software should not rely on the value of a reserved bit. To provide compatibility with future products, the value of a reserved bit should be preserved across a read-modify-write operation.
11:10	ActCmpBD	R/W	0x0	Action for Comparator B Down The action to be taken when the counter matches comparator B while counting down. The table below defines the effect of the event on the output signal.

Value	Description
0x0	Do nothing.
0x1	Invert the output signal.
0x2	Set the output signal to 0.
0x3	Set the output signal to 1.

Bit/Field	Name	Type	Reset	Description
9:8	ActCmpBU	R/W	0x0	Action for Comparator B Up The action to be taken when the counter matches comparator B while counting up. Occurs only when the `Mode` bit in the **PWMnCTL** register (see page 616) is set to 1. The table below defines the effect of the event on the output signal. Value Description 0x0 Do nothing. 0x1 Invert the output signal. 0x2 Set the output signal to 0. 0x3 Set the output signal to 1.
7:6	ActCmpAD	R/W	0x0	Action for Comparator A Down The action to be taken when the counter matches comparator A while counting down. The table below defines the effect of the event on the output signal. Value Description 0x0 Do nothing. 0x1 Invert the output signal. 0x2 Set the output signal to 0. 0x3 Set the output signal to 1.
5:4	ActCmpAU	R/W	0x0	Action for Comparator A Up The action to be taken when the counter matches comparator A while counting up. Occurs only when the `Mode` bit in the **PWMnCTL** register is set to 1. The table below defines the effect of the event on the output signal. Value Description 0x0 Do nothing. 0x1 Invert the output signal. 0x2 Set the output signal to 0. 0x3 Set the output signal to 1.
3:2	ActLoad	R/W	0x0	Action for Counter=Load The action to be taken when the counter matches the load value. The table below defines the effect of the event on the output signal. Value Description 0x0 Do nothing. 0x1 Invert the output signal. 0x2 Set the output signal to 0. 0x3 Set the output signal to 1.

Bit/Field	Name	Type	Reset	Description
1:0	ActZero	R/W	0x0	Action for Counter=0 The action to be taken when the counter is zero. The table below defines the effect of the event on the output signal. Value Description 0x0 Do nothing. 0x1 Invert the output signal. 0x2 Set the output signal to 0. 0x3 Set the output signal to 1.

Register 29: PWM0 Generator B Control (PWM0GENB), offset 0x064

Register 30: PWM1 Generator B Control (PWM1GENB), offset 0x0A4

These registers control the generation of the `PWMnB` signal based on the load and zero output pulses from the counter, as well as the compare A and compare B pulses from the comparators (**PWM0GENB** controls the PWM generator 0 block, and so on). When the counter is running in Down mode, only four of these events occur; when running in Up/Down mode, all six occur. These events provide great flexibility in the positioning and duty cycle of the PWM signal that is produced.

The **PWM0GENB** register controls generation of the `PWM0B` signal; **PWM1GENB**, the `PWM1B` signal.

If a zero or load event coincides with a compare A or compare B event, the zero or load action is taken and the compare A or compare B action is ignored. If a compare A event coincides with a compare B event, the compare B action is taken and the compare A action is ignored.

If the Generator B update mode is immediate (based on the `GenBUpd` field encoding in the **PWMnCTL** register), this 16-bit `GenBUpd` value is used the next time the counter reaches zero. If the update mode is synchronous, it is used the next time the counter reaches zero after a synchronous update has been requested through the **PWM Master Control (PWMCTL)** register (see page 606). If this register is rewritten before the actual update occurs, the previous value is never used and is lost.

PWM0 Generator B Control (PWM0GENB)

Base 0x4002.8000
Offset 0x064
Type R/W, reset 0x0000.0000

	31	30	29	28	27	26	25	24	23	22	21	20	19	18	17	16
	reserved															
Type	RO	RO	RO	RO	RO	RO	RO	RO	RO	RO	RO	RO	RO	RO	RO	RO
Reset	0	0	0	0	0	0	0	0	0	0	0	0	0	0	0	0

	15	14	13	12	11	10	9	8	7	6	5	4	3	2	1	0
	reserved				ActCmpBD		ActCmpBU		ActCmpAD		ActCmpAU		ActLoad		ActZero	
Type	RO	RO	RO	RO	R/W	R/W	R/W	R/W	R/W	R/W	R/W	R/W	R/W	R/W	R/W	R/W
Reset	0	0	0	0	0	0	0	0	0	0	0	0	0	0	0	0

Bit/Field	Name	Type	Reset	Description
31:12	reserved	RO	0x00	Software should not rely on the value of a reserved bit. To provide compatibility with future products, the value of a reserved bit should be preserved across a read-modify-write operation.
11:10	ActCmpBD	R/W	0x0	Action for Comparator B Down The action to be taken when the counter matches comparator B while counting down. The table below defines the effect of the event on the output signal. Value Description 0x0 Do nothing. 0x1 Invert the output signal. 0x2 Set the output signal to 0. 0x3 Set the output signal to 1.

Bit/Field	Name	Type	Reset	Description
9:8	ActCmpBU	R/W	0x0	Action for Comparator B Up The action to be taken when the counter matches comparator B while counting up. Occurs only when the `Mode` bit in the **PWMnCTL** register is set to 1. The table below defines the effect of the event on the output signal. Value Description 0x0 Do nothing. 0x1 Invert the output signal. 0x2 Set the output signal to 0. 0x3 Set the output signal to 1.
7:6	ActCmpAD	R/W	0x0	Action for Comparator A Down The action to be taken when the counter matches comparator A while counting down. The table below defines the effect of the event on the output signal. Value Description 0x0 Do nothing. 0x1 Invert the output signal. 0x2 Set the output signal to 0. 0x3 Set the output signal to 1.
5:4	ActCmpAU	R/W	0x0	Action for Comparator A Up The action to be taken when the counter matches comparator A while counting up. Occurs only when the `Mode` bit in the **PWMnCTL** register is set to 1. The table below defines the effect of the event on the output signal. Value Description 0x0 Do nothing. 0x1 Invert the output signal. 0x2 Set the output signal to 0. 0x3 Set the output signal to 1.
3:2	ActLoad	R/W	0x0	Action for Counter=Load The action to be taken when the counter matches the load value. The table below defines the effect of the event on the output signal. Value Description 0x0 Do nothing. 0x1 Invert the output signal. 0x2 Set the output signal to 0. 0x3 Set the output signal to 1.

Bit/Field	Name	Type	Reset	Description
1:0	ActZero	R/W	0x0	Action for Counter=0 The action to be taken when the counter is 0. The table below defines the effect of the event on the output signal. Value Description 0x0 Do nothing. 0x1 Invert the output signal. 0x2 Set the output signal to 0. 0x3 Set the output signal to 1.

Register 31: PWM0 Dead-Band Control (PWM0DBCTL), offset 0x068

Register 32: PWM1 Dead-Band Control (PWM1DBCTL), offset 0x0A8

The **PWM0DBCTL** register controls the dead-band generator, which produces the `PWM0` and `PWM1` signals based on the `PWM0A` and `PWM0B` signals. When disabled, the `PWM0A` signal passes through to the `PWM0` signal and the `PWM0B` signal passes through to the `PWM1` signal. When enabled and inverting the resulting waveform, the `PWM0B` signal is ignored; the `PWM0` signal is generated by delaying the rising edge(s) of the `PWM0A` signal by the value in the **PWM0DBRISE** register (see page 637), and the `PWM1` signal is generated by delaying the falling edge(s) of the `PWM0A` signal by the value in the **PWM0DBFALL** register (see page 638). In a similar manner, `PWM2` and `PWM3` are produced from the `PWM1A` and `PWM1B` signals.

If the Dead-Band Control mode is immediate (based on the `DBCtlUpd` field encoding in the **PWMnCTL** register), this 16-bit `DBCtlUpd` value is used the next time the counter reaches zero. If the update mode is synchronous, it is used the next time the counter reaches zero after a synchronous update has been requested through the **PWM Master Control (PWMCTL)** register (see page 606). If this register is rewritten before the actual update occurs, the previous value is never used and is lost.

PWM0 Dead-Band Control (PWM0DBCTL)

Base 0x4002.8000
Offset 0x068
Type R/W, reset 0x0000.0000

	31	30	29	28	27	26	25	24	23	22	21	20	19	18	17	16
	reserved															
Type	RO	RO	RO	RO	RO	RO	RO	RO	RO	RO	RO	RO	RO	RO	RO	RO
Reset	0	0	0	0	0	0	0	0	0	0	0	0	0	0	0	0

	15	14	13	12	11	10	9	8	7	6	5	4	3	2	1	0
	reserved															Enable
Type	RO	RO	RO	RO	RO	RO	RO	RO	RO	RO	RO	RO	RO	RO	RO	R/W
Reset	0	0	0	0	0	0	0	0	0	0	0	0	0	0	0	0

Bit/Field	Name	Type	Reset	Description
31:1	reserved	RO	0x00	Software should not rely on the value of a reserved bit. To provide compatibility with future products, the value of a reserved bit should be preserved across a read-modify-write operation.
0	Enable	R/W	0	Dead-Band Generator Enable When set, the dead-band generator inserts dead bands into the output signals; when clear, it simply passes the PWM signals through.

Register 33: PWM0 Dead-Band Rising-Edge Delay (PWM0DBRISE), offset 0x06C

Register 34: PWM1 Dead-Band Rising-Edge Delay (PWM1DBRISE), offset 0x0AC

The **PWM0DBRISE** register contains the number of clock ticks to delay the rising edge of the `PWM0A` signal when generating the `PWM0` signal. If the dead-band generator is disabled through the **PWMnDBCTL** register, the **PWM0DBRISE** register is ignored. If the value of this register is larger than the width of a High pulse on the input PWM signal, the rising-edge delay consumes the entire High time of the signal, resulting in no High time on the output. Care must be taken to ensure that the input High time always exceeds the rising-edge delay. In a similar manner, `PWM2` is generated from `PWM1A` with its rising edge delayed.

If the Dead-Band Rising-Edge Delay mode is immediate (based on the `DBRiseUpd` field encoding in the **PWMnCTL** register), this 16-bit `DBRiseUpd` value is used the next time the counter reaches zero. If the update mode is synchronous, it is used the next time the counter reaches zero after a synchronous update has been requested through the **PWM Master Control (PWMCTL)** register (see page 606). If this register is rewritten before the actual update occurs, the previous value is never used and is lost.

PWM0 Dead-Band Rising-Edge Delay (PWM0DBRISE)

Base 0x4002.8000
Offset 0x06C
Type R/W, reset 0x0000.0000

	31	30	29	28	27	26	25	24	23	22	21	20	19	18	17	16
	reserved															
Type	RO	RO	RO	RO	RO	RO	RO	RO	RO	RO	RO	RO	RO	RO	RO	RO
Reset	0	0	0	0	0	0	0	0	0	0	0	0	0	0	0	0

	15	14	13	12	11	10	9	8	7	6	5	4	3	2	1	0
	reserved				RiseDelay											
Type	RO	RO	RO	RO	R/W	R/W	R/W	R/W	R/W	R/W	R/W	R/W	R/W	R/W	R/W	R/W
Reset	0	0	0	0	0	0	0	0	0	0	0	0	0	0	0	0

Bit/Field	Name	Type	Reset	Description
31:12	reserved	RO	0x00	Software should not rely on the value of a reserved bit. To provide compatibility with future products, the value of a reserved bit should be preserved across a read-modify-write operation.
11:0	RiseDelay	R/W	0	Dead-Band Rise Delay The number of clock ticks to delay the rising edge.

Register 35: PWM0 Dead-Band Falling-Edge-Delay (PWM0DBFALL), offset 0x070

Register 36: PWM1 Dead-Band Falling-Edge-Delay (PWM1DBFALL), offset 0x0B0

The **PWM0DBFALL** register contains the number of clock ticks to delay the falling edge of the `PWM0A` signal when generating the `PWM1` signal. If the dead-band generator is disabled, this register is ignored. If the value of this register is larger than the width of a Low pulse on the input PWM signal, the falling-edge delay consumes the entire Low time of the signal, resulting in no Low time on the output. Care must be taken to ensure that the input Low time always exceeds the falling-edge delay. In a similar manner, `PWM3` is generated from `PWM1A` with its falling edge delayed.

If the Dead-Band Falling-Edge-Delay mode is immediate (based on the `DBFallUp` field encoding in the **PWMnCTL** register), this 16-bit `DBFallUp` value is used the next time the counter reaches zero. If the update mode is synchronous, it is used the next time the counter reaches zero after a synchronous update has been requested through the **PWM Master Control (PWMCTL)** register (see page 606). If this register is rewritten before the actual update occurs, the previous value is never used and is lost.

PWM0 Dead-Band Falling-Edge-Delay (PWM0DBFALL)

Base 0x4002.8000
Offset 0x070
Type R/W, reset 0x0000.0000

	31	30	29	28	27	26	25	24	23	22	21	20	19	18	17	16
	reserved															
Type	RO	RO	RO	RO	RO	RO	RO	RO	RO	RO	RO	RO	RO	RO	RO	RO
Reset	0	0	0	0	0	0	0	0	0	0	0	0	0	0	0	0

	15	14	13	12	11	10	9	8	7	6	5	4	3	2	1	0
	reserved				FallDelay											
Type	RO	RO	RO	RO	R/W	R/W	R/W	R/W	R/W	R/W	R/W	R/W	R/W	R/W	R/W	R/W
Reset	0	0	0	0	0	0	0	0	0	0	0	0	0	0	0	0

Bit/Field	Name	Type	Reset	Description
31:12	reserved	RO	0x00	Software should not rely on the value of a reserved bit. To provide compatibility with future products, the value of a reserved bit should be preserved across a read-modify-write operation.
11:0	FallDelay	R/W	0x00	Dead-Band Fall Delay The number of clock ticks to delay the falling edge.

Register 37: PWM0 Fault Source 0 (PWM0FLTSRC0), offset 0x074

Register 38: PWM1 Fault Source 0 (PWM1FLTSRC0), offset 0x0B4

This register specifies which fault pin inputs are used to indicate a fault condition. Each bit in the following register indicates whether the corresponding fault pin is included in the fault condition. All enabled fault pins are ORed together to form the **PWMnFLTSRC0** portion of the fault condition. The **PWMnFLTSRC0** fault condition is then ORed with the **PWMnFLTSRC1** fault condition to generate the final fault condition for the PWM generator.

If the `FLTSRC` bit in the **PWMnCTL** register (see page 616) is clear, only the PWM `Fault0` pin affects the fault condition generated. Otherwise, sources defined in **PWMnFLTSRC0** and **PWMnFLTSRC1** affect the fault condition generated.

PWM0 Fault Source 0 (PWM0FLTSRC0)

Base 0x4002.8000
Offset 0x074
Type R/W, reset 0x0000.0000

	31	30	29	28	27	26	25	24	23	22	21	20	19	18	17	16
	reserved															
Type	RO	RO	RO	RO	RO	RO	RO	RO	RO	RO	RO	RO	RO	RO	RO	RO
Reset	0	0	0	0	0	0	0	0	0	0	0	0	0	0	0	0

	15	14	13	12	11	10	9	8	7	6	5	4	3	2	1	0
	reserved														FAULT1	FAULT0
Type	RO	RO	RO	RO	RO	RO	RO	RO	RO	RO	RO	RO	RO	RO	R/W	R/W
Reset	0	0	0	0	0	0	0	0	0	0	0	0	0	0	0	0

Bit/Field	Name	Type	Reset	Description
31:2	reserved	RO	0	Software should not rely on the value of a reserved bit. To provide compatibility with future products, the value of a reserved bit should be preserved across a read-modify-write operation.
1	FAULT1	R/W	0	`Fault1` The same function as `Fault0`, except applied for the `FAULT1` input. **Note:** The `FLTSRC` bit in the **PWMnCTL** register must be set for this bit to affect fault condition generation.
0	FAULT0	R/W	0	`Fault0` Specifies the contribution of the `FAULT0` input to the generation of a fault condition. Value Description 0 Suppressed The `FAULT0` signal is suppressed and cannot generate a fault condition. 1 Generated The `FAULT0` signal value is ORed with all other fault condition generation inputs (Fault signals).

Register 39: PWM0 Minimum Fault Period (PWM0MINFLTPER), offset 0x07C

Register 40: PWM1 Minimum Fault Period (PWM1MINFLTPER), offset 0x0BC

If the `MINFLTPER` bit in the **PWMnCTL** register is set, this register specifies the 16-bit time-extension value to be used in extending the fault condition. The value is loaded into a 16-bit down counter, and the counter value is used to extend the fault condition. The fault condition is released in the clock immediately after the counter value reaches 0. The fault condition is asynchronous to the PWM clock; and the delay value is the product of the PWM clock period and the (MFP field value + 1) or (MFP field value + 2) depending on when the fault condition asserts with respect to the PWM clock. The counter decrements at the PWM clock rate, without pause or condition.

PWM0 Minimum Fault Period (PWM0MINFLTPER)

Base 0x4002.8000
Offset 0x07C
Type R/W, reset 0x0000.0000

	31	30	29	28	27	26	25	24	23	22	21	20	19	18	17	16
	reserved															
Type	RO	RO	RO	RO	RO	RO	RO	RO	RO	RO	RO	RO	RO	RO	RO	RO
Reset	0	0	0	0	0	0	0	0	0	0	0	0	0	0	0	0

	15	14	13	12	11	10	9	8	7	6	5	4	3	2	1	0
	MFP															
Type	R/W	R/W	R/W	R/W	R/W	R/W	R/W	R/W	R/W	R/W	R/W	R/W	R/W	R/W	R/W	R/W
Reset	0	0	0	0	0	0	0	0	0	0	0	0	0	0	0	0

Bit/Field	Name	Type	Reset	Description
31:16	reserved	RO	0	Software should not rely on the value of a reserved bit. To provide compatibility with future products, the value of a reserved bit should be preserved across a read-modify-write operation.
15:0	MFP	R/W	0	Minimum Fault Period The number of PWM clocks by which a fault condition is extended when the delay is enabled by **PWMnCTL** `MINFLTPER`.

Register 41: PWM0 Fault Pin Logic Sense (PWM0FLTSEN), offset 0x800

Register 42: PWM1 Fault Pin Logic Sense (PWM1FLTSEN), offset 0x880

This register defines the PWM fault pin logic sense.

PWM0 Fault Pin Logic Sense (PWM0FLTSEN)

Base 0x4002.8000
Offset 0x800
Type R/W, reset 0x0000.0000

	31	30	29	28	27	26	25	24	23	22	21	20	19	18	17	16
	reserved															
Type	RO	RO	RO	RO	RO	RO	RO	RO	RO	RO	RO	RO	RO	RO	RO	RO
Reset	0	0	0	0	0	0	0	0	0	0	0	0	0	0	0	0

	15	14	13	12	11	10	9	8	7	6	5	4	3	2	1	0
	reserved														FAULT1	FAULT0
Type	RO	RO	RO	RO	RO	RO	RO	RO	RO	RO	RO	RO	RO	RO	R/W	R/W
Reset	0	0	0	0	0	0	0	0	0	0	0	0	0	0	0	0

Bit/Field	Name	Type	Reset	Description
31:2	reserved	RO	0	Software should not rely on the value of a reserved bit. To provide compatibility with future products, the value of a reserved bit should be preserved across a read-modify-write operation.
1	FAULT1	R/W	0	Fault1 Sense The same function as `FLT0SEN`, except applied for the `FAULT1` input.
0	FAULT0	R/W	0	Fault0 Sense This bit specifies the sense of the `FAULT0` input pin, and it determines what sense is considered asserted, that is, the sense of the input (High or Low) that indicates error. Value Description 0 High 1 Low The fault sense is used to translate the incoming `FAULT0` pin signal sense to an internal positive signal.

Register 43: PWM0 Fault Status 0 (PWM0FLTSTAT0), offset 0x804

Register 44: PWM1 Fault Status 0 (PWM1FLTSTAT0), offset 0x884

Along with the **PWMnFLTSTAT1** register, this register provides status regarding the fault condition inputs.

If the LATCH bit in the **PWMnCTL** register is clear, the contents of the **PWMnFLTSTAT0** register are read-only (RO) and provide the current state of the FAULTn inputs.

If the LATCH bit in the **PWMnCTL** register is set, the contents of the **PWMnFLTSTAT0** register are read / write 1 to clear (R/W1C) and provide a latched version of the FAULTn inputs. In this mode, the register bits are cleared by writing a 1 to a set bit. The FAULTn inputs are recorded after their sense is adjusted in the generator.

The contents of this register can only be written if the fault source extensions are enabled (the FLTSRC bit in the **PWMnCTL** register is set).

PWM0 Fault Status 0 (PWM0FLTSTAT0)

Base 0x4002.8000
Offset 0x804
Type -, reset 0x0000.0000

	31	30	29	28	27	26	25	24	23	22	21	20	19	18	17	16
	reserved															
Type	RO	RO	RO	RO	RO	RO	RO	RO	RO	RO	RO	RO	RO	RO	RO	RO
Reset	0	0	0	0	0	0	0	0	0	0	0	0	0	0	0	0

	15	14	13	12	11	10	9	8	7	6	5	4	3	2	1	0
	reserved														FAULT1	FAULT0
Type	RO	RO	RO	RO	RO	RO	RO	RO	RO	RO	RO	RO	RO	RO	-	-
Reset	0	0	0	0	0	0	0	0	0	0	0	0	0	0	0	0

Bit/Field	Name	Type	Reset	Description
31:2	reserved	RO	0	Software should not rely on the value of a reserved bit. To provide compatibility with future products, the value of a reserved bit should be preserved across a read-modify-write operation.
1	FAULT1	-	0	Fault Input 1 The same function as FAULT0, except applied for the FAULT1 input.
0	FAULT0	-	0	Fault Input 0 If the **PWMnCTL** register LATCH bit is clear, this bit is RO and represents the current state of the FAULT0 input signal after the logic sense adjustment. If the **PWMnCTL** register LATCH bit is set, this bit is R/W1C and represents a sticky version of the FAULT0 input signal after the logic sense adjustment. ■ If FAULT0 is set, the input transitioned to the active state previously. ■ If FAULT0 is clear, the input has not transitioned to the active state since the last time it was cleared. ■ The FAULT0 bit is cleared by writing it with the value 1.

16 Quadrature Encoder Interface (QEI)

A quadrature encoder, also known as a 2-channel incremental encoder, converts linear displacement into a pulse signal. By monitoring both the number of pulses and the relative phase of the two signals, you can track the position, direction of rotation, and speed. In addition, a third channel, or index signal, can be used to reset the position counter.

The Stellaris® quadrature encoder interface (QEI) module interprets the code produced by a quadrature encoder wheel to integrate position over time and determine direction of rotation. In addition, it can capture a running estimate of the velocity of the encoder wheel.

The Stellaris quadrature encoder has the following features:

- Position integrator that tracks the encoder position
- Velocity capture using built-in timer
- The input frequency of the QEI inputs may be as high as 1/4 of the processor frequency (for example, 12.5 MHz for a 50-MHz system)
- Interrupt generation on:
  - Index pulse
  - Velocity-timer expiration
  - Direction change
  - Quadrature error detection

16.1 Block Diagram

Figure 16-1 on page 644 provides a block diagram of a Stellaris QEI module.

Figure 16-1. QEI Block Diagram

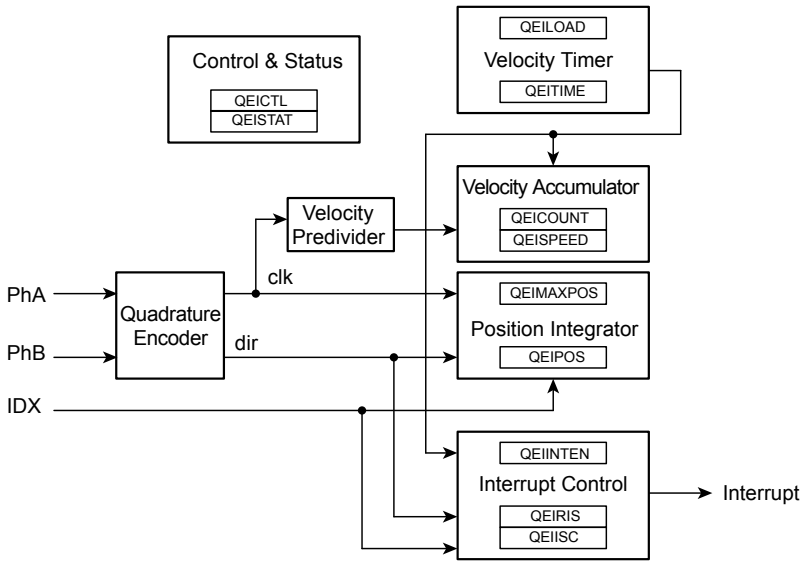

16.2 Signal Description

Table 16-1 on page 644 lists the external signals of the QEI module and describes the function of each. The QEI signals are alternate functions for some GPIO signals and default to be GPIO signals at reset. The column in the table below titled "Pin Assignment" lists the possible GPIO pin placements for these QEI signals. The AFSEL bit in the **GPIO Alternate Function Select (GPIOAFSEL)** register (page 344) should be set to choose the QEI function. For more information on configuring GPIOs, see “General-Purpose Input/Outputs (GPIOs)” on page 324.

Table 16-1. QEI Signals (64LQFP)

Pin Name	Pin Number	Pin Type	Buffer Type[a]	Description
IDX0	47	I	TTL	QEI module 0 index.
PhA0	11	I	TTL	QEI module 0 phase A.
PhB0	16	I	TTL	QEI module 0 phase B.

a. The TTL designation indicates the pin has TTL-compatible voltage levels.

16.3 Functional Description

The QEI module interprets the two-bit gray code produced by a quadrature encoder wheel to integrate position over time and determine direction of rotation. In addition, it can capture a running estimate of the velocity of the encoder wheel.

The position integrator and velocity capture can be independently enabled, though the position integrator must be enabled before the velocity capture can be enabled. The two phase signals, PhA and PhB, can be swapped before being interpreted by the QEI module to change the meaning of forward and backward, and to correct for miswiring of the system. Alternatively, the phase signals can be interpreted as a clock and direction signal as output by some encoders.

The QEI module supports two modes of signal operation: quadrature phase mode and clock/direction mode. In quadrature phase mode, the encoder produces two clocks that are 90 degrees out of phase; the edge relationship is used to determine the direction of rotation. In clock/direction mode, the encoder produces a clock signal to indicate steps and a direction signal to indicate the direction of rotation. This mode is determined by the `SigMode` bit of the **QEI Control (QEICTL)** register (see page 649).

When the QEI module is set to use the quadrature phase mode (`SigMode` bit equals zero), the capture mode for the position integrator can be set to update the position counter on every edge of the `PhA` signal or to update on every edge of both `PhA` and `PhB`. Updating the position counter on every `PhA` and `PhB` provides more positional resolution at the cost of less range in the positional counter.

When edges on `PhA` lead edges on `PhB` , the position counter is incremented. When edges on `PhB` lead edges on `PhA` , the position counter is decremented. When a rising and falling edge pair is seen on one of the phases without any edges on the other, the direction of rotation has changed.

The positional counter is automatically reset on one of two conditions: sensing the index pulse or reaching the maximum position value. Which mode is determined by the `ResMode` bit of the **QEI Control (QEICTL)** register.

When `ResMode` is 1, the positional counter is reset when the index pulse is sensed. This limits the positional counter to the values [0:N-1], where N is the number of phase edges in a full revolution of the encoder wheel. The **QEIMAXPOS** register must be programmed with N-1 so that the reverse direction from position 0 can move the position counter to N-1. In this mode, the position register contains the absolute position of the encoder relative to the index (or home) position once an index pulse has been seen.

When `ResMode` is 0, the positional counter is constrained to the range [0:M], where M is the programmable maximum value. The index pulse is ignored by the positional counter in this mode.

The velocity capture has a configurable timer and a count register. It counts the number of phase edges (using the same configuration as for the position integrator) in a given time period. The edge count from the previous time period is available to the controller via the **QEISPEED** register, while the edge count for the current time period is being accumulated in the **QEICOUNT** register. As soon as the current time period is complete, the total number of edges counted in that time period is made available in the **QEISPEED** register (losing the previous value), the **QEICOUNT** is reset to 0, and counting commences on a new time period. The number of edges counted in a given time period is directly proportional to the velocity of the encoder.

Figure 16-2 on page 645 shows how the Stellaris quadrature encoder converts the phase input signals into clock pulses, the direction signal, and how the velocity predivider operates (in Divide by 4 mode).

Figure 16-2. Quadrature Encoder and Velocity Predivider Operation

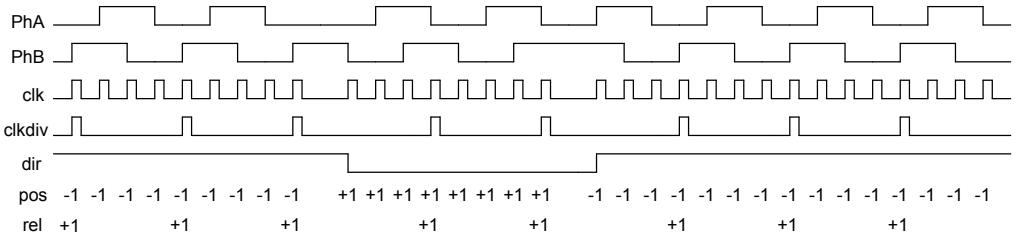

The period of the timer is configurable by specifying the load value for the timer in the **QEILOAD** register. When the timer reaches zero, an interrupt can be triggered, and the hardware reloads the

timer with the **QEILOAD** value and continues to count down. At lower encoder speeds, a longer timer period is needed to be able to capture enough edges to have a meaningful result. At higher encoder speeds, both a shorter timer period and/or the velocity predivider can be used.

The following equation converts the velocity counter value into an rpm value:

```
rpm = (clock * (2 ^ VelDiv) * Speed * 60) ÷ (Load * ppr * edges)
```

where:

`clock` is the controller clock rate

`ppr` is the number of pulses per revolution of the physical encoder

`edges` is 2 or 4, based on the capture mode set in the **QEICTL** register (2 for `CapMode` set to 0 and 4 for `CapMode` set to 1)

For example, consider a motor running at 600 rpm. A 2048 pulse per revolution quadrature encoder is attached to the motor, producing 8192 phase edges per revolution. With a velocity predivider of ÷1 (`VelDiv` set to 0) and clocking on both `PhA` and `PhB` edges, this results in 81,920 pulses per second (the motor turns 10 times per second). If the timer were clocked at 10,000 Hz, and the load value was 2,500 (¼ of a second), it would count 20,480 pulses per update. Using the above equation:

```
rpm = (10000 * 1 * 20480 * 60) ÷ (2500 * 2048 * 4) = 600 rpm
```

Now, consider that the motor is sped up to 3000 rpm. This results in 409,600 pulses per second, or 102,400 every ¼ of a second. Again, the above equation gives:

```
rpm = (10000 * 1 * 102400 * 60) ÷ (2500 * 2048 * 4) = 3000 rpm
```

Care must be taken when evaluating this equation since intermediate values may exceed the capacity of a 32-bit integer. In the above examples, the clock is 10,000 and the divider is 2,500; both could be predivided by 100 (at compile time if they are constants) and therefore be 100 and 25. In fact, if they were compile-time constants, they could also be reduced to a simple multiply by 4, cancelled by the ÷4 for the edge-count factor.

Important: Reducing constant factors at compile time is the best way to control the intermediate values of this equation, as well as reducing the processing requirement of computing this equation.

The division can be avoided by selecting a timer load value such that the divisor is a power of 2; a simple shift can therefore be done in place of the division. For encoders with a power of 2 pulses per revolution, this is a simple matter of selecting a power of 2 load value. For other encoders, a load value must be selected such that the product is very close to a power of two. For example, a 100 pulse per revolution encoder could use a load value of 82, resulting in 32,800 as the divisor, which is 0.09% above 2^{14}; in this case a shift by 15 would be an adequate approximation of the divide in most cases. If absolute accuracy were required, the controller's divide instruction could be used.

The QEI module can produce a controller interrupt on several events: phase error, direction change, reception of the index pulse, and expiration of the velocity timer. Standard masking, raw interrupt status, interrupt status, and interrupt clear capabilities are provided.

16.4 Initialization and Configuration

The following example shows how to configure the Quadrature Encoder module to read back an absolute position:

1. Enable the QEI clock by writing a value of 0x0000.0100 to the **RCGC1** register in the System Control module.
2. Enable the clock to the appropriate GPIO module via the **RCGC2** register in the System Control module.
3. In the GPIO module, enable the appropriate pins for their alternate function using the **GPIOAFSEL** register.
4. Configure the quadrature encoder to capture edges on both signals and maintain an absolute position by resetting on index pulses. Using a 1000-line encoder at four edges per line, there are 4000 pulses per revolution; therefore, set the maximum position to 3999 (0xF9F) since the count is zero-based.
   - Write the **QEICTL** register with the value of 0x0000.0018.
   - Write the **QEIMAXPOS** register with the value of 0x0000.0F9F.
5. Enable the quadrature encoder by setting bit 0 of the **QEICTL** register.
6. Delay for some time.
7. Read the encoder position by reading the **QEIPOS** register value.

16.5 Register Map

Table 16-2 on page 647 lists the QEI registers. The offset listed is a hexadecimal increment to the register's address, relative to the module's base address:

- QEI0: 0x4002.C000

Note that the QEI module clock must be enabled before the registers can be programmed (see page 218). There must be a delay of 3 system clocks after the QEI module clock is enabled before any QEI module registers are accessed.

Table 16-2. QEI Register Map

Offset	Name	Type	Reset	Description	See page
0x000	QEICTL	R/W	0x0000.0000	QEI Control	649
0x004	QEISTAT	RO	0x0000.0000	QEI Status	651
0x008	QEIPOS	R/W	0x0000.0000	QEI Position	652
0x00C	QEIMAXPOS	R/W	0x0000.0000	QEI Maximum Position	653
0x010	QEILOAD	R/W	0x0000.0000	QEI Timer Load	654
0x014	QEITIME	RO	0x0000.0000	QEI Timer	655
0x018	QEICOUNT	RO	0x0000.0000	QEI Velocity Counter	656
0x01C	QEISPEED	RO	0x0000.0000	QEI Velocity	657
0x020	QEIINTEN	R/W	0x0000.0000	QEI Interrupt Enable	658
0x024	QEIRIS	RO	0x0000.0000	QEI Raw Interrupt Status	659

Table 16-2. QEI Register Map *(continued)*

Offset	Name	Type	Reset	Description	See page
0x028	QEIISC	R/W1C	0x0000.0000	QEI Interrupt Status and Clear	660

16.6 Register Descriptions

The remainder of this section lists and describes the QEI registers, in numerical order by address offset.

Register 1: QEI Control (QEICTL), offset 0x000

This register contains the configuration of the QEI module. Separate enables are provided for the quadrature encoder and the velocity capture blocks; the quadrature encoder must be enabled in order to capture the velocity, but the velocity does not need to be captured in applications that do not need it. The phase signal interpretation, phase swap, Position Update mode, Position Reset mode, and velocity predivider are all set via this register.

QEI Control (QEICTL)

QEI0 base: 0x4002.C000
Offset 0x000
Type R/W, reset 0x0000.0000

	31	30	29	28	27	26	25	24	23	22	21	20	19	18	17	16
	reserved															
Type	RO	RO	RO	RO	RO	RO	RO	RO	RO	RO	RO	RO	RO	RO	RO	RO
Reset	0	0	0	0	0	0	0	0	0	0	0	0	0	0	0	0

	15	14	13	12	11	10	9	8	7	6	5	4	3	2	1	0
	reserved			STALLEN	INVI	INVB	INVA	VelDiv			VelEn	ResMode	CapMode	SigMode	Swap	Enable
Type	RO	RO	RO	R/W	R/W	R/W	R/W	R/W	R/W	R/W	R/W	R/W	R/W	R/W	R/W	R/W
Reset	0	0	0	0	0	0	0	0	0	0	0	0	0	0	0	0

Bit/Field	Name	Type	Reset	Description
31:13	reserved	RO	0x00	Software should not rely on the value of a reserved bit. To provide compatibility with future products, the value of a reserved bit should be preserved across a read-modify-write operation.
12	STALLEN	R/W	0	Stall QEI When set, the QEI stalls when the microcontroller asserts Halt.
11	INVI	R/W	0	Invert Index Pulse When set , the input Index Pulse is inverted.
10	INVB	R/W	0	Invert PhB When set, the PhB input is inverted.
9	INVA	R/W	0	Invert PhA When set, the PhA input is inverted.
8:6	VelDiv	R/W	0x0	Predivide Velocity A predivider of the input quadrature pulses before being applied to the QEICOUNT accumulator. This field can be set to the following values:

Value	Predivider
0x0	÷1
0x1	÷2
0x2	÷4
0x3	÷8
0x4	÷16
0x5	÷32
0x6	÷64
0x7	÷128

Bit/Field	Name	Type	Reset	Description
5	VelEn	R/W	0	Capture Velocity When set, enables capture of the velocity of the quadrature encoder.
4	ResMode	R/W	0	Reset Mode The Reset mode for the position counter. When 0, the position counter is reset when it reaches the maximum; when 1, the position counter is reset when the index pulse is captured.
3	CapMode	R/W	0	Capture Mode The Capture mode defines the phase edges that are counted in the position. When 0, only the PhA edges are counted; when 1, the PhA and PhB edges are counted, providing twice the positional resolution but half the range.
2	SigMode	R/W	0	Signal Mode When 1, the PhA and PhB signals are clock and direction; when 0, they are quadrature phase signals.
1	Swap	R/W	0	Swap Signals Swaps the PhA and PhB signals.
0	Enable	R/W	0	Enable QEI Enables the quadrature encoder module.

Register 2: QEI Status (QEISTAT), offset 0x004

This register provides status about the operation of the QEI module.

QEI Status (QEISTAT)

QEI0 base: 0x4002.C000
Offset 0x004
Type RO, reset 0x0000.0000

	31	30	29	28	27	26	25	24	23	22	21	20	19	18	17	16
	reserved															
Type	RO	RO	RO	RO	RO	RO	RO	RO	RO	RO	RO	RO	RO	RO	RO	RO
Reset	0	0	0	0	0	0	0	0	0	0	0	0	0	0	0	0

	15	14	13	12	11	10	9	8	7	6	5	4	3	2	1	0
	reserved														Direction	Error
Type	RO	RO	RO	RO	RO	RO	RO	RO	RO	RO	RO	RO	RO	RO	RO	RO
Reset	0	0	0	0	0	0	0	0	0	0	0	0	0	0	0	0

Bit/Field	Name	Type	Reset	Description
31:2	reserved	RO	0x00	Software should not rely on the value of a reserved bit. To provide compatibility with future products, the value of a reserved bit should be preserved across a read-modify-write operation.
1	Direction	RO	0	Direction of Rotation Indicates the direction the encoder is rotating. The `Direction` values are defined as follows: Value Description 0 Forward rotation 1 Reverse rotation
0	Error	RO	0	Error Detected Indicates that an error was detected in the gray code sequence (that is, both signals changing at the same time).

Register 3: QEI Position (QEIPOS), offset 0x008

This register contains the current value of the position integrator. Its value is updated by inputs on the QEI phase inputs, and can be set to a specific value by writing to it.

QEI Position (QEIPOS)

QEI0 base: 0x4002.C000
Offset 0x008
Type R/W, reset 0x0000.0000

	31	30	29	28	27	26	25	24	23	22	21	20	19	18	17	16
	Position															
Type	R/W	R/W	R/W	R/W	R/W	R/W	R/W	R/W	R/W	R/W	R/W	R/W	R/W	R/W	R/W	R/W
Reset	0	0	0	0	0	0	0	0	0	0	0	0	0	0	0	0

	15	14	13	12	11	10	9	8	7	6	5	4	3	2	1	0
	Position															
Type	R/W	R/W	R/W	R/W	R/W	R/W	R/W	R/W	R/W	R/W	R/W	R/W	R/W	R/W	R/W	R/W
Reset	0	0	0	0	0	0	0	0	0	0	0	0	0	0	0	0

Bit/Field	Name	Type	Reset	Description
31:0	Position	R/W	0x00	Current Position Integrator Value The current value of the position integrator.

Register 4: QEI Maximum Position (QEIMAXPOS), offset 0x00C

This register contains the maximum value of the position integrator. When moving forward, the position register resets to zero when it increments past this value. When moving backward, the position register resets to this value when it decrements from zero.

QEI Maximum Position (QEIMAXPOS)

QEI0 base: 0x4002.C000
Offset 0x00C
Type R/W, reset 0x0000.0000

	31	30	29	28	27	26	25	24	23	22	21	20	19	18	17	16
	MaxPos															
Type	R/W	R/W	R/W	R/W	R/W	R/W	R/W	R/W	R/W	R/W	R/W	R/W	R/W	R/W	R/W	R/W
Reset	0	0	0	0	0	0	0	0	0	0	0	0	0	0	0	0

	15	14	13	12	11	10	9	8	7	6	5	4	3	2	1	0
	MaxPos															
Type	R/W	R/W	R/W	R/W	R/W	R/W	R/W	R/W	R/W	R/W	R/W	R/W	R/W	R/W	R/W	R/W
Reset	0	0	0	0	0	0	0	0	0	0	0	0	0	0	0	0

Bit/Field	Name	Type	Reset	Description
31:0	MaxPos	R/W	0x00	Maximum Position Integrator Value The maximum value of the position integrator.

Register 5: QEI Timer Load (QEILOAD), offset 0x010

This register contains the load value for the velocity timer. Since this value is loaded into the timer the clock cycle after the timer is zero, this value should be one less than the number of clocks in the desired period. So, for example, to have 2000 clocks per timer period, this register should contain 1999.

QEI Timer Load (QEILOAD)

QEI0 base: 0x4002.C000
Offset 0x010
Type R/W, reset 0x0000.0000

	31	30	29	28	27	26	25	24	23	22	21	20	19	18	17	16
	Load															
Type	R/W	R/W	R/W	R/W	R/W	R/W	R/W	R/W	R/W	R/W	R/W	R/W	R/W	R/W	R/W	R/W
Reset	0	0	0	0	0	0	0	0	0	0	0	0	0	0	0	0

	15	14	13	12	11	10	9	8	7	6	5	4	3	2	1	0
	Load															
Type	R/W	R/W	R/W	R/W	R/W	R/W	R/W	R/W	R/W	R/W	R/W	R/W	R/W	R/W	R/W	R/W
Reset	0	0	0	0	0	0	0	0	0	0	0	0	0	0	0	0

Bit/Field	Name	Type	Reset	Description
31:0	Load	R/W	0x00	Velocity Timer Load Value The load value for the velocity timer.

Register 6: QEI Timer (QEITIME), offset 0x014

This register contains the current value of the velocity timer. This counter does not increment when `VelEn` in **QEICTL** is 0.

QEI Timer (QEITIME)

QEI0 base: 0x4002.C000
Offset 0x014
Type RO, reset 0x0000.0000

	31	30	29	28	27	26	25	24	23	22	21	20	19	18	17	16
	Time															
Type	RO	RO	RO	RO	RO	RO	RO	RO	RO	RO	RO	RO	RO	RO	RO	RO
Reset	0	0	0	0	0	0	0	0	0	0	0	0	0	0	0	0

	15	14	13	12	11	10	9	8	7	6	5	4	3	2	1	0
	Time															
Type	RO	RO	RO	RO	RO	RO	RO	RO	RO	RO	RO	RO	RO	RO	RO	RO
Reset	0	0	0	0	0	0	0	0	0	0	0	0	0	0	0	0

Bit/Field	Name	Type	Reset	Description
31:0	Time	RO	0x00	Velocity Timer Current Value The current value of the velocity timer.

Register 7: QEI Velocity Counter (QEICOUNT), offset 0x018

This register contains the running count of velocity pulses for the current time period. Since this is a running total, the time period to which it applies cannot be known with precision (that is, a read of this register does not necessarily correspond to the time returned by the **QEITIME** register since there is a small window of time between the two reads, during which time either value may have changed). The **QEISPEED** register should be used to determine the actual encoder velocity; this register is provided for information purposes only. This counter does not increment when `VelEn` in **QEICTL** is 0.

QEI Velocity Counter (QEICOUNT)

QEI0 base: 0x4002.C000
Offset 0x018
Type RO, reset 0x0000.0000

	31	30	29	28	27	26	25	24	23	22	21	20	19	18	17	16
	Count															
Type	RO	RO	RO	RO	RO	RO	RO	RO	RO	RO	RO	RO	RO	RO	RO	RO
Reset	0	0	0	0	0	0	0	0	0	0	0	0	0	0	0	0

	15	14	13	12	11	10	9	8	7	6	5	4	3	2	1	0
	Count															
Type	RO	RO	RO	RO	RO	RO	RO	RO	RO	RO	RO	RO	RO	RO	RO	RO
Reset	0	0	0	0	0	0	0	0	0	0	0	0	0	0	0	0

Bit/Field	Name	Type	Reset	Description
31:0	Count	RO	0x00	Velocity Pulse Count The running total of encoder pulses during this velocity timer period.

Register 8: QEI Velocity (QEISPEED), offset 0x01C

This register contains the most recently measured velocity of the quadrature encoder. This corresponds to the number of velocity pulses counted in the previous velocity timer period. This register does not update when `VelEn` in **QEICTL** is 0.

QEI Velocity (QEISPEED)

QEI0 base: 0x4002.C000
Offset 0x01C
Type RO, reset 0x0000.0000

	31	30	29	28	27	26	25	24	23	22	21	20	19	18	17	16
	Speed															
Type	RO	RO	RO	RO	RO	RO	RO	RO	RO	RO	RO	RO	RO	RO	RO	RO
Reset	0	0	0	0	0	0	0	0	0	0	0	0	0	0	0	0

	15	14	13	12	11	10	9	8	7	6	5	4	3	2	1	0
	Speed															
Type	RO	RO	RO	RO	RO	RO	RO	RO	RO	RO	RO	RO	RO	RO	RO	RO
Reset	0	0	0	0	0	0	0	0	0	0	0	0	0	0	0	0

Bit/Field	Name	Type	Reset	Description
31:0	Speed	RO	0x00	Velocity The measured speed of the quadrature encoder in pulses per period.

Register 9: QEI Interrupt Enable (QEIINTEN), offset 0x020

This register contains enables for each of the QEI module's interrupts. An interrupt is asserted to the controller if its corresponding bit in this register is set to 1.

QEI Interrupt Enable (QEIINTEN)

QEI0 base: 0x4002.C000
Offset 0x020
Type R/W, reset 0x0000.0000

	31	30	29	28	27	26	25	24	23	22	21	20	19	18	17	16
	reserved															
Type	RO	RO	RO	RO	RO	RO	RO	RO	RO	RO	RO	RO	RO	RO	RO	RO
Reset	0	0	0	0	0	0	0	0	0	0	0	0	0	0	0	0

	15	14	13	12	11	10	9	8	7	6	5	4	3	2	1	0
	reserved												IntError	IntDir	IntTimer	IntIndex
Type	RO	RO	RO	RO	RO	RO	RO	RO	RO	RO	RO	RO	R/W	R/W	R/W	R/W
Reset	0	0	0	0	0	0	0	0	0	0	0	0	0	0	0	0

Bit/Field	Name	Type	Reset	Description
31:4	reserved	RO	0x00	Software should not rely on the value of a reserved bit. To provide compatibility with future products, the value of a reserved bit should be preserved across a read-modify-write operation.
3	IntError	R/W	0	Phase Error Interrupt Enable When 1, an interrupt occurs when a phase error is detected.
2	IntDir	R/W	0	Direction Change Interrupt Enable When 1, an interrupt occurs when the direction changes.
1	IntTimer	R/W	0	Timer Expires Interrupt Enable When 1, an interrupt occurs when the velocity timer expires.
0	IntIndex	R/W	0	Index Pulse Detected Interrupt Enable When 1, an interrupt occurs when the index pulse is detected.

Register 10: QEI Raw Interrupt Status (QEIRIS), offset 0x024

This register provides the current set of interrupt sources that are asserted, regardless of whether they cause an interrupt to be asserted to the controller (this is set through the **QEIINTEN** register). Bits set to 1 indicate the latched events that have occurred; a zero bit indicates that the event in question has not occurred.

QEI Raw Interrupt Status (QEIRIS)

QEI0 base: 0x4002.C000
Offset 0x024
Type RO, reset 0x0000.0000

	31	30	29	28	27	26	25	24	23	22	21	20	19	18	17	16
	reserved															
Type	RO	RO	RO	RO	RO	RO	RO	RO	RO	RO	RO	RO	RO	RO	RO	RO
Reset	0	0	0	0	0	0	0	0	0	0	0	0	0	0	0	0

	15	14	13	12	11	10	9	8	7	6	5	4	3	2	1	0
	reserved												IntError	IntDir	IntTimer	IntIndex
Type	RO	RO	RO	RO	RO	RO	RO	RO	RO	RO	RO	RO	RO	RO	RO	RO
Reset	0	0	0	0	0	0	0	0	0	0	0	0	0	0	0	0

Bit/Field	Name	Type	Reset	Description
31:4	reserved	RO	0x00	Software should not rely on the value of a reserved bit. To provide compatibility with future products, the value of a reserved bit should be preserved across a read-modify-write operation.
3	IntError	RO	0	Phase Error Detected Indicates that a phase error was detected.
2	IntDir	RO	0	Direction Change Detected Indicates that the direction has changed.
1	IntTimer	RO	0	Velocity Timer Expired Indicates that the velocity timer has expired.
0	IntIndex	RO	0	Index Pulse Asserted Indicates that the index pulse has occurred.

Register 11: QEI Interrupt Status and Clear (QEIISC), offset 0x028

This register provides the current set of interrupt sources that are asserted to the controller. Bits set to 1 indicate the latched events that have occurred; a zero bit indicates that the event in question has not occurred. This is a R/W1C register; writing a 1 to a bit position clears the corresponding interrupt reason.

QEI Interrupt Status and Clear (QEIISC)

QEI0 base: 0x4002.C000
Offset 0x028
Type R/W1C, reset 0x0000.0000

	31	30	29	28	27	26	25	24	23	22	21	20	19	18	17	16
	reserved															
Type	RO	RO	RO	RO	RO	RO	RO	RO	RO	RO	RO	RO	RO	RO	RO	RO
Reset	0	0	0	0	0	0	0	0	0	0	0	0	0	0	0	0

	15	14	13	12	11	10	9	8	7	6	5	4	3	2	1	0
	reserved												IntError	IntDir	IntTimer	IntIndex
Type	RO	RO	RO	RO	RO	RO	RO	RO	RO	RO	RO	RO	R/W1C	R/W1C	R/W1C	R/W1C
Reset	0	0	0	0	0	0	0	0	0	0	0	0	0	0	0	0

Bit/Field	Name	Type	Reset	Description
31:4	reserved	RO	0x00	Software should not rely on the value of a reserved bit. To provide compatibility with future products, the value of a reserved bit should be preserved across a read-modify-write operation.
3	IntError	R/W1C	0	Phase Error Interrupt Indicates that a phase error was detected.
2	IntDir	R/W1C	0	Direction Change Interrupt Indicates that the direction has changed.
1	IntTimer	R/W1C	0	Velocity Timer Expired Interrupt Indicates that the velocity timer has expired.
0	IntIndex	R/W1C	0	Index Pulse Interrupt Indicates that the index pulse has occurred.

17 Pin Diagram

The LM3S2678 microcontroller pin diagram is shown below.

Figure 17-1. 64-Pin LQFP Package Pin Diagram

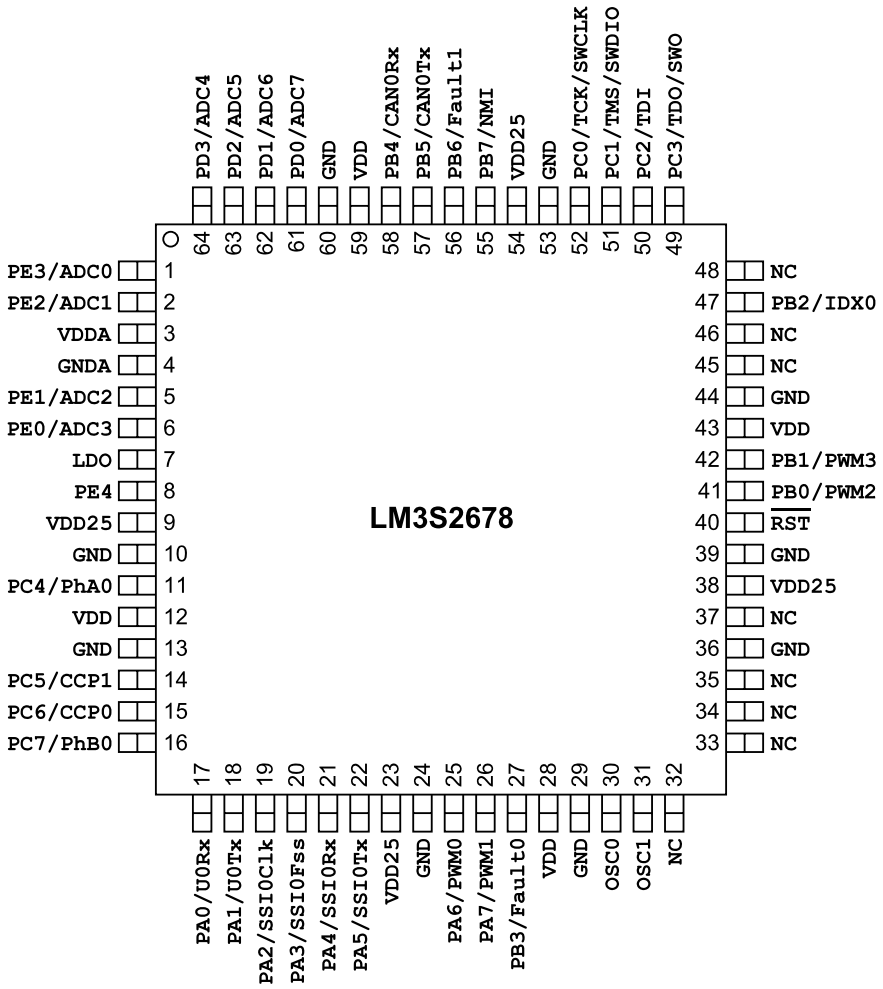

18 Signal Tables

Important: All multiplexed pins are GPIOs by default, with the exception of the four JTAG pins (PC[3:0]) which default to the JTAG functionality.

The following tables list the signals available for each pin. Functionality is enabled by software with the **GPIOAFSEL** register. All digital inputs are Schmitt triggered.

- Signals by Pin Number
- Signals by Signal Name
- Signals by Function, Except for GPIO
- GPIO Pins and Alternate Functions
- Connections for Unused Signals

18.1 Signals by Pin Number

Table 18-1. Signals by Pin Number

Pin Number	Pin Name	Pin Type	Buffer Type[a]	Description
1	PE3	I/O	TTL	GPIO port E bit 3.
	ADC0	I	Analog	Analog-to-digital converter input 0.
2	PE2	I/O	TTL	GPIO port E bit 2.
	ADC1	I	Analog	Analog-to-digital converter input 1.
3	VDDA	-	Power	The positive supply for the analog circuits (ADC, Analog Comparators, etc.). These are separated from VDD to minimize the electrical noise contained on VDD from affecting the analog functions. VDDA pins must be supplied with a voltage that meets the specification in “Recommended DC Operating Conditions” on page 673, regardless of system implementation.
4	GNDA	-	Power	The ground reference for the analog circuits (ADC, etc.). These are separated from GND to minimize the electrical noise contained on VDD from affecting the analog functions.
5	PE1	I/O	TTL	GPIO port E bit 1.
	ADC2	I	Analog	Analog-to-digital converter input 2.
6	PE0	I/O	TTL	GPIO port E bit 0.
	ADC3	I	Analog	Analog-to-digital converter input 3.
7	LDO	-	Power	Low drop-out regulator output voltage. This pin requires an external capacitor between the pin and GND of 1 µF or greater. The LDO pin must also be connected to the VDD25 pins at the board level in addition to the decoupling capacitor(s).
8	PE4	I/O	TTL	GPIO port E bit 4.
9	VDD25	-	Power	Positive supply for most of the logic function, including the processor core and most peripherals.
10	GND	-	Power	Ground reference for logic and I/O pins.
11	PC4	I/O	TTL	GPIO port C bit 4.
	PhA0	I	TTL	QEI module 0 phase A.
12	VDD	-	Power	Positive supply for I/O and some logic.
13	GND	-	Power	Ground reference for logic and I/O pins.

Table 18-1. Signals by Pin Number *(continued)*

Pin Number	Pin Name	Pin Type	Buffer Type[a]	Description
14	PC5	I/O	TTL	GPIO port C bit 5.
	CCP1	I/O	TTL	Capture/Compare/PWM 1.
15	PC6	I/O	TTL	GPIO port C bit 6.
	CCP0	I/O	TTL	Capture/Compare/PWM 0.
16	PC7	I/O	TTL	GPIO port C bit 7.
	PhB0	I	TTL	QEI module 0 phase B.
17	PA0	I/O	TTL	GPIO port A bit 0.
	U0Rx	I	TTL	UART module 0 receive. When in IrDA mode, this signal has IrDA modulation.
18	PA1	I/O	TTL	GPIO port A bit 1.
	U0Tx	O	TTL	UART module 0 transmit. When in IrDA mode, this signal has IrDA modulation.
19	PA2	I/O	TTL	GPIO port A bit 2.
	SSI0Clk	I/O	TTL	SSI module 0 clock.
20	PA3	I/O	TTL	GPIO port A bit 3.
	SSI0Fss	I/O	TTL	SSI module 0 frame signal.
21	PA4	I/O	TTL	GPIO port A bit 4.
	SSI0Rx	I	TTL	SSI module 0 receive.
22	PA5	I/O	TTL	GPIO port A bit 5.
	SSI0Tx	O	TTL	SSI module 0 transmit.
23	VDD25	-	Power	Positive supply for most of the logic function, including the processor core and most peripherals.
24	GND	-	Power	Ground reference for logic and I/O pins.
25	PA6	I/O	TTL	GPIO port A bit 6.
	PWM0	O	TTL	PWM 0. This signal is controlled by PWM Generator 0.
26	PA7	I/O	TTL	GPIO port A bit 7.
	PWM1	O	TTL	PWM 1. This signal is controlled by PWM Generator 0.
27	PB3	I/O	TTL	GPIO port B bit 3.
	Fault0	I	TTL	PWM Fault 0.
28	VDD	-	Power	Positive supply for I/O and some logic.
29	GND	-	Power	Ground reference for logic and I/O pins.
30	OSC0	I	Analog	Main oscillator crystal input or an external clock reference input.
31	OSC1	O	Analog	Main oscillator crystal output. Leave unconnected when using a single-ended clock source.
32	NC	-	-	No connect. Leave the pin electrically unconnected/isolated.
33	NC	-	-	No connect. Leave the pin electrically unconnected/isolated.
34	NC	-	-	No connect. Leave the pin electrically unconnected/isolated.
35	NC	-	-	No connect. Leave the pin electrically unconnected/isolated.
36	GND	-	Power	Ground reference for logic and I/O pins.
37	NC	-	-	No connect. Leave the pin electrically unconnected/isolated.
38	VDD25	-	Power	Positive supply for most of the logic function, including the processor core and most peripherals.
39	GND	-	Power	Ground reference for logic and I/O pins.

Table 18-1. Signals by Pin Number *(continued)*

Pin Number	Pin Name	Pin Type	Buffer Type[a]	Description
40	$\overline{\text{RST}}$	I	TTL	System reset input.
41	PB0	I/O	TTL	GPIO port B bit 0.
	PWM2	O	TTL	PWM 2. This signal is controlled by PWM Generator 1.
42	PB1	I/O	TTL	GPIO port B bit 1.
	PWM3	O	TTL	PWM 3. This signal is controlled by PWM Generator 1.
43	VDD	-	Power	Positive supply for I/O and some logic.
44	GND	-	Power	Ground reference for logic and I/O pins.
45	NC	-	-	No connect. Leave the pin electrically unconnected/isolated.
46	NC	-	-	No connect. Leave the pin electrically unconnected/isolated.
47	PB2	I/O	TTL	GPIO port B bit 2.
	IDX0	I	TTL	QEI module 0 index.
48	NC	-	-	No connect. Leave the pin electrically unconnected/isolated.
49	PC3	I/O	TTL	GPIO port C bit 3.
	SWO	O	TTL	JTAG TDO and SWO.
	TDO	O	TTL	JTAG TDO and SWO.
50	PC2	I/O	TTL	GPIO port C bit 2.
	TDI	I	TTL	JTAG TDI.
51	PC1	I/O	TTL	GPIO port C bit 1.
	SWDIO	I/O	TTL	JTAG TMS and SWDIO.
	TMS	I/O	TTL	JTAG TMS and SWDIO.
52	PC0	I/O	TTL	GPIO port C bit 0.
	SWCLK	I	TTL	JTAG/SWD CLK.
	TCK	I	TTL	JTAG/SWD CLK.
53	GND	-	Power	Ground reference for logic and I/O pins.
54	VDD25	-	Power	Positive supply for most of the logic function, including the processor core and most peripherals.
55	PB7	I/O	TTL	GPIO port B bit 7.
	NMI	I	TTL	Non-maskable interrupt.
56	PB6	I/O	TTL	GPIO port B bit 6.
	Fault1	I	TTL	PWM Fault 1.
57	PB5	I/O	TTL	GPIO port B bit 5.
	CAN0Tx	O	TTL	CAN module 0 transmit.
58	PB4	I/O	TTL	GPIO port B bit 4.
	CAN0Rx	I	TTL	CAN module 0 receive.
59	VDD	-	Power	Positive supply for I/O and some logic.
60	GND	-	Power	Ground reference for logic and I/O pins.
61	PD0	I/O	TTL	GPIO port D bit 0.
	ADC7	I	Analog	Analog-to-digital converter input 7.
62	PD1	I/O	TTL	GPIO port D bit 1.
	ADC6	I	Analog	Analog-to-digital converter input 6.
63	PD2	I/O	TTL	GPIO port D bit 2.
	ADC5	I	Analog	Analog-to-digital converter input 5.

Table 18-1. Signals by Pin Number *(continued)*

Pin Number	Pin Name	Pin Type	Buffer Type[a]	Description
64	PD3	I/O	TTL	GPIO port D bit 3.
	ADC4	I	Analog	Analog-to-digital converter input 4.

a. The TTL designation indicates the pin has TTL-compatible voltage levels.

18.2 Signals by Signal Name

Table 18-2. Signals by Signal Name

Pin Name	Pin Number	Pin Type	Buffer Type[a]	Description
ADC0	1	I	Analog	Analog-to-digital converter input 0.
ADC1	2	I	Analog	Analog-to-digital converter input 1.
ADC2	5	I	Analog	Analog-to-digital converter input 2.
ADC3	6	I	Analog	Analog-to-digital converter input 3.
ADC4	64	I	Analog	Analog-to-digital converter input 4.
ADC5	63	I	Analog	Analog-to-digital converter input 5.
ADC6	62	I	Analog	Analog-to-digital converter input 6.
ADC7	61	I	Analog	Analog-to-digital converter input 7.
CAN0Rx	58	I	TTL	CAN module 0 receive.
CAN0Tx	57	O	TTL	CAN module 0 transmit.
CCP0	15	I/O	TTL	Capture/Compare/PWM 0.
CCP1	14	I/O	TTL	Capture/Compare/PWM 1.
Fault0	27	I	TTL	PWM Fault 0.
Fault1	56	I	TTL	PWM Fault 1.
GND	10 13 24 29 36 39 44 53 60	-	Power	Ground reference for logic and I/O pins.
GNDA	4	-	Power	The ground reference for the analog circuits (ADC, etc.). These are separated from GND to minimize the electrical noise contained on VDD from affecting the analog functions.
IDX0	47	I	TTL	QEI module 0 index.
LDO	7	-	Power	Low drop-out regulator output voltage. This pin requires an external capacitor between the pin and GND of 1 µF or greater. The LDO pin must also be connected to the VDD25 pins at the board level in addition to the decoupling capacitor(s).
NC	32 33 34 35 37 45 46 48	-	-	No connect. Leave the pin electrically unconnected/isolated.

Table 18-2. Signals by Signal Name *(continued)*

Pin Name	Pin Number	Pin Type	Buffer Type[a]	Description
NMI	55	I	TTL	Non-maskable interrupt.
OSC0	30	I	Analog	Main oscillator crystal input or an external clock reference input.
OSC1	31	O	Analog	Main oscillator crystal output. Leave unconnected when using a single-ended clock source.
PA0	17	I/O	TTL	GPIO port A bit 0.
PA1	18	I/O	TTL	GPIO port A bit 1.
PA2	19	I/O	TTL	GPIO port A bit 2.
PA3	20	I/O	TTL	GPIO port A bit 3.
PA4	21	I/O	TTL	GPIO port A bit 4.
PA5	22	I/O	TTL	GPIO port A bit 5.
PA6	25	I/O	TTL	GPIO port A bit 6.
PA7	26	I/O	TTL	GPIO port A bit 7.
PB0	41	I/O	TTL	GPIO port B bit 0.
PB1	42	I/O	TTL	GPIO port B bit 1.
PB2	47	I/O	TTL	GPIO port B bit 2.
PB3	27	I/O	TTL	GPIO port B bit 3.
PB4	58	I/O	TTL	GPIO port B bit 4.
PB5	57	I/O	TTL	GPIO port B bit 5.
PB6	56	I/O	TTL	GPIO port B bit 6.
PB7	55	I/O	TTL	GPIO port B bit 7.
PC0	52	I/O	TTL	GPIO port C bit 0.
PC1	51	I/O	TTL	GPIO port C bit 1.
PC2	50	I/O	TTL	GPIO port C bit 2.
PC3	49	I/O	TTL	GPIO port C bit 3.
PC4	11	I/O	TTL	GPIO port C bit 4.
PC5	14	I/O	TTL	GPIO port C bit 5.
PC6	15	I/O	TTL	GPIO port C bit 6.
PC7	16	I/O	TTL	GPIO port C bit 7.
PD0	61	I/O	TTL	GPIO port D bit 0.
PD1	62	I/O	TTL	GPIO port D bit 1.
PD2	63	I/O	TTL	GPIO port D bit 2.
PD3	64	I/O	TTL	GPIO port D bit 3.
PE0	6	I/O	TTL	GPIO port E bit 0.
PE1	5	I/O	TTL	GPIO port E bit 1.
PE2	2	I/O	TTL	GPIO port E bit 2.
PE3	1	I/O	TTL	GPIO port E bit 3.
PE4	8	I/O	TTL	GPIO port E bit 4.
PhA0	11	I	TTL	QEI module 0 phase A.
PhB0	16	I	TTL	QEI module 0 phase B.
PWM0	25	O	TTL	PWM 0. This signal is controlled by PWM Generator 0.
PWM1	26	O	TTL	PWM 1. This signal is controlled by PWM Generator 0.

Table 18-2. Signals by Signal Name *(continued)*

Pin Name	Pin Number	Pin Type	Buffer Type[a]	Description
PWM2	41	O	TTL	PWM 2. This signal is controlled by PWM Generator 1.
PWM3	42	O	TTL	PWM 3. This signal is controlled by PWM Generator 1.
$\overline{\text{RST}}$	40	I	TTL	System reset input.
SSI0Clk	19	I/O	TTL	SSI module 0 clock.
SSI0Fss	20	I/O	TTL	SSI module 0 frame signal.
SSI0Rx	21	I	TTL	SSI module 0 receive.
SSI0Tx	22	O	TTL	SSI module 0 transmit.
SWCLK	52	I	TTL	JTAG/SWD CLK.
SWDIO	51	I/O	TTL	JTAG TMS and SWDIO.
SWO	49	O	TTL	JTAG TDO and SWO.
TCK	52	I	TTL	JTAG/SWD CLK.
TDI	50	I	TTL	JTAG TDI.
TDO	49	O	TTL	JTAG TDO and SWO.
TMS	51	I/O	TTL	JTAG TMS and SWDIO.
U0Rx	17	I	TTL	UART module 0 receive. When in IrDA mode, this signal has IrDA modulation.
U0Tx	18	O	TTL	UART module 0 transmit. When in IrDA mode, this signal has IrDA modulation.
VDD	12 28 43 59	-	Power	Positive supply for I/O and some logic.
VDD25	9 23 38 54	-	Power	Positive supply for most of the logic function, including the processor core and most peripherals.
VDDA	3	-	Power	The positive supply for the analog circuits (ADC, Analog Comparators, etc.). These are separated from VDD to minimize the electrical noise contained on VDD from affecting the analog functions. VDDA pins must be supplied with a voltage that meets the specification in “Recommended DC Operating Conditions” on page 673, regardless of system implementation.

a. The TTL designation indicates the pin has TTL-compatible voltage levels.

18.3 Signals by Function, Except for GPIO

Table 18-3. Signals by Function, Except for GPIO

Function	Pin Name	Pin Number	Pin Type	Buffer Type[a]	Description
ADC	ADC0	1	I	Analog	Analog-to-digital converter input 0.
	ADC1	2	I	Analog	Analog-to-digital converter input 1.
	ADC2	5	I	Analog	Analog-to-digital converter input 2.
	ADC3	6	I	Analog	Analog-to-digital converter input 3.
	ADC4	64	I	Analog	Analog-to-digital converter input 4.
	ADC5	63	I	Analog	Analog-to-digital converter input 5.
	ADC6	62	I	Analog	Analog-to-digital converter input 6.
	ADC7	61	I	Analog	Analog-to-digital converter input 7.
Controller Area Network	CAN0Rx	58	I	TTL	CAN module 0 receive.
	CAN0Tx	57	O	TTL	CAN module 0 transmit.
General-Purpose Timers	CCP0	15	I/O	TTL	Capture/Compare/PWM 0.
	CCP1	14	I/O	TTL	Capture/Compare/PWM 1.
JTAG/SWD/SWO	SWCLK	52	I	TTL	JTAG/SWD CLK.
	SWDIO	51	I/O	TTL	JTAG TMS and SWDIO.
	SWO	49	O	TTL	JTAG TDO and SWO.
	TCK	52	I	TTL	JTAG/SWD CLK.
	TDI	50	I	TTL	JTAG TDI.
	TDO	49	O	TTL	JTAG TDO and SWO.
	TMS	51	I/O	TTL	JTAG TMS and SWDIO.
PWM	Fault0	27	I	TTL	PWM Fault 0.
	Fault1	56	I	TTL	PWM Fault 1.
	PWM0	25	O	TTL	PWM 0. This signal is controlled by PWM Generator 0.
	PWM1	26	O	TTL	PWM 1. This signal is controlled by PWM Generator 0.
	PWM2	41	O	TTL	PWM 2. This signal is controlled by PWM Generator 1.
	PWM3	42	O	TTL	PWM 3. This signal is controlled by PWM Generator 1.

Table 18-3. Signals by Function, Except for GPIO *(continued)*

Function	Pin Name	Pin Number	Pin Type	Buffer Type[a]	Description
Power	GND	10 13 24 29 36 39 44 53 60	-	Power	Ground reference for logic and I/O pins.
	GNDA	4	-	Power	The ground reference for the analog circuits (ADC, etc.). These are separated from GND to minimize the electrical noise contained on VDD from affecting the analog functions.
	LDO	7	-	Power	Low drop-out regulator output voltage. This pin requires an external capacitor between the pin and GND of 1 µF or greater. The LDO pin must also be connected to the VDD25 pins at the board level in addition to the decoupling capacitor(s).
	VDD	12 28 43 59	-	Power	Positive supply for I/O and some logic.
	VDD25	9 23 38 54	-	Power	Positive supply for most of the logic function, including the processor core and most peripherals.
	VDDA	3	-	Power	The positive supply for the analog circuits (ADC, Analog Comparators, etc.). These are separated from VDD to minimize the electrical noise contained on VDD from affecting the analog functions. VDDA pins must be supplied with a voltage that meets the specification in “Recommended DC Operating Conditions” on page 673, regardless of system implementation.
QEI	IDX0	47	I	TTL	QEI module 0 index.
	PhA0	11	I	TTL	QEI module 0 phase A.
	PhB0	16	I	TTL	QEI module 0 phase B.
SSI	SSI0Clk	19	I/O	TTL	SSI module 0 clock.
	SSI0Fss	20	I/O	TTL	SSI module 0 frame signal.
	SSI0Rx	21	I	TTL	SSI module 0 receive.
	SSI0Tx	22	O	TTL	SSI module 0 transmit.
System Control & Clocks	NMI	55	I	TTL	Non-maskable interrupt.
	OSC0	30	I	Analog	Main oscillator crystal input or an external clock reference input.
	OSC1	31	O	Analog	Main oscillator crystal output. Leave unconnected when using a single-ended clock source.
	RST	40	I	TTL	System reset input.

Table 18-3. Signals by Function, Except for GPIO *(continued)*

Function	Pin Name	Pin Number	Pin Type	Buffer Type[a]	Description
UART	U0Rx	17	I	TTL	UART module 0 receive. When in IrDA mode, this signal has IrDA modulation.
	U0Tx	18	O	TTL	UART module 0 transmit. When in IrDA mode, this signal has IrDA modulation.

a. The TTL designation indicates the pin has TTL-compatible voltage levels.

18.4 GPIO Pins and Alternate Functions

Table 18-4. GPIO Pins and Alternate Functions

IO	Pin Number	Multiplexed Function	Multiplexed Function
PA0	17	U0Rx	
PA1	18	U0Tx	
PA2	19	SSI0Clk	
PA3	20	SSI0Fss	
PA4	21	SSI0Rx	
PA5	22	SSI0Tx	
PA6	25	PWM0	
PA7	26	PWM1	
PB0	41	PWM2	
PB1	42	PWM3	
PB2	47	IDX0	
PB3	27	Fault0	
PB4	58	CAN0Rx	
PB5	57	CAN0Tx	
PB6	56	Fault1	
PB7	55	NMI	
PC0	52	TCK	SWCLK
PC1	51	TMS	SWDIO
PC2	50	TDI	
PC3	49	TDO	SWO
PC4	11	PhA0	
PC5	14	CCP1	
PC6	15	CCP0	
PC7	16	PhB0	
PD0	61	ADC7	
PD1	62	ADC6	
PD2	63	ADC5	
PD3	64	ADC4	
PE0	6	ADC3	
PE1	5	ADC2	
PE2	2	ADC1	
PE3	1	ADC0	

Table 18-4. GPIO Pins and Alternate Functions *(continued)*

IO	Pin Number	Multiplexed Function	Multiplexed Function
PE4	8		

18.5 Connections for Unused Signals

Table 18-5 on page 671 shows how to handle signals for functions that are not used in a particular system implementation for devices that are in a 64-pin LQFP package. Two options are shown in the table: an acceptable practice and a preferred practice for reduced power consumption and improved EMC characteristics.

Table 18-5. Connections for Unused Signals (64-pin LQFP)

Function	Signal Name	Pin Number	Acceptable Practice	Preferred Practice
GPIO	All unused GPIOs	-	NC	GND
No Connects	NC	-	NC	NC
System Control	OSC0	30	NC	GND
	OSC1	31	NC	NC
	$\overline{\text{RST}}$	40	Pull up as shown in Figure 5-1 on page 169	Connect through a capacitor to GND as close to pin as possible

19 Operating Characteristics

Table 19-1. Temperature Characteristics

Characteristic	Symbol	Value	Unit
Industrial operating temperature range	T_A	-40 to +85	°C
Unpowered storage temperature range	T_S	-65 to +150	°C

Table 19-2. Thermal Characteristics

Characteristic	Symbol	Value	Unit
Thermal resistance (junction to ambient)[a]	Θ_{JA}	37	°C/W
Junction temperature[b]	T_J	$T_A + (P \cdot \Theta_{JA})$	°C

a. Junction to ambient thermal resistance θ_{JA} numbers are determined by a package simulator.

b. Power dissipation is a function of temperature.

Table 19-3. ESD Absolute Maximum Ratings[a]

Parameter Name	Min	Nom	Max	Unit
V_{ESDHBM}	-	-	2.0	kV
V_{ESDCDM}	-	-	1.0	kV
V_{ESDMM}	-	-	100	V

a. All Stellaris parts are ESD tested following the JEDEC standard.

20 Electrical Characteristics

20.1 DC Characteristics

20.1.1 Maximum Ratings

The maximum ratings are the limits to which the device can be subjected without permanently damaging the device.

Note: The device is not guaranteed to operate properly at the maximum ratings.

Table 20-1. Maximum Ratings

Characteristic[a]	Symbol	Value		Unit
		Min	Max	
I/O supply voltage (V_{DD})	V_{DD}	0	4	V
Core supply voltage (V_{DD25})	V_{DD25}	0	3	V
Analog supply voltage (V_{DDA})	V_{DDA}	0	4	V
Input voltage	V_{IN}	-0.3	5.5	V
Input voltage for a GPIO configured as an analog input		-0.3	V_{DD} + 0.3	V
Maximum current per output pins	I	-	25	mA
Maximum input voltage on a non-power pin when the microcontroller is unpowered	V_{NON}	-	300	mV

a. Voltages are measured with respect to GND.

Important: This device contains circuitry to protect the inputs against damage due to high-static voltages or electric fields; however, it is advised that normal precautions be taken to avoid application of any voltage higher than maximum-rated voltages to this high-impedance circuit. Reliability of operation is enhanced if unused inputs are connected to an appropriate logic voltage level (for example, either GND or V_{DD}).

20.1.2 Recommended DC Operating Conditions

For special high-current applications, the GPIO output buffers may be used with the following restrictions. With the GPIO pins configured as 8-mA output drivers, a total of four GPIO outputs may be used to sink current loads up to 18 mA each. At 18-mA sink current loading, the V_{OL} value is specified as 1.2 V. The high-current GPIO package pins must be selected such that there are only a maximum of two per side of the physical package with the total number of high-current GPIO outputs not exceeding four for the entire package.

Table 20-2. Recommended DC Operating Conditions

Parameter	Parameter Name	Min	Nom	Max	Unit
V_{DD}	I/O supply voltage	3.0	3.3	3.6	V
V_{DD25}	Core supply voltage	2.25	2.5	2.75	V
V_{DDA}	Analog supply voltage	3.0	3.3	3.6	V
V_{IH}	High-level input voltage	2.0	-	5.0	V
V_{IL}	Low-level input voltage	-0.3	-	1.3	V
V_{OH}[a]	High-level output voltage	2.4	-	-	V
V_{OL}[a]	Low-level output voltage	-	-	0.4	V

Table 20-2. Recommended DC Operating Conditions *(continued)*

Parameter	Parameter Name	Min	Nom	Max	Unit
I_{OH}	High-level source current, V_{OH}=2.4 V				
	2-mA Drive	2.0	-	-	mA
	4-mA Drive	4.0	-	-	mA
	8-mA Drive	8.0	-	-	mA
I_{OL}	Low-level sink current, V_{OL}=0.4 V				
	2-mA Drive	2.0	-	-	mA
	4-mA Drive	4.0	-	-	mA
	8-mA Drive	8.0	-	-	mA

a. V_{OL} and V_{OH} shift to 1.2 V when using high-current GPIOs.

20.1.3 On-Chip Low Drop-Out (LDO) Regulator Characteristics

Table 20-3. LDO Regulator Characteristics

Parameter	Parameter Name	Min	Nom	Max	Unit
V_{LDOOUT}	Programmable internal (logic) power supply output value	2.25	2.5	2.75	V
	Output voltage accuracy	-	2%	-	%
t_{PON}	Power-on time	-	-	100	µs
t_{ON}	Time on	-	-	200	µs
t_{OFF}	Time off	-	-	100	µs
V_{STEP}	Step programming incremental voltage	-	50	-	mV
C_{LDO}	External filter capacitor size for internal power supply	1.0	-	3.0	µF

20.1.4 GPIO Module Characteristics

Table 20-4. GPIO Module DC Characteristics

Parameter	Parameter Name	Min	Nom	Max	Unit
R_{GPIOPU}	GPIO internal pull-up resistor	50	-	110	kΩ
R_{GPIOPD}	GPIO internal pull-down resistor	55	-	180	kΩ
I_{LKG}	GPIO input leakage current[a]	-	-	2	µA

a. The leakage current is measured with GND or V_{DD} applied to the corresponding pin(s). The leakage of digital port pins is measured individually. The port pin is configured as an input and the pullup/pulldown resistor is disabled.

20.1.5 Power Specifications

The power measurements specified in the tables that follow are run on the core processor using SRAM with the following specifications (except as noted):

- V_{DD} = 3.3 V
- V_{DD25} = 2.50 V
- V_{DDA} = 3.3 V
- Temperature = 25°C

- Clock Source (MOSC) =3.579545 MHz Crystal Oscillator
- Main oscillator (MOSC) = enabled
- Internal oscillator (IOSC) = disabled

Table 20-5. Detailed Power Specifications

Parameter	Parameter Name	Conditions	3.3 V V_{DD}, V_{DDA}		2.5 V V_{DD25}		Unit
			Nom	Max	Nom	Max	
I_{DD_RUN}	Run mode 1 (Flash loop)	V_{DD25} = 2.50 V Code= while(1){} executed out of Flash Peripherals = All ON System Clock = 50 MHz (with PLL)	3	pending[a]	108	pending[a]	mA
	Run mode 2 (Flash loop)	V_{DD25} = 2.50 V Code= while(1){} executed out of Flash Peripherals = All OFF System Clock = 50 MHz (with PLL)	0	pending[a]	53	pending[a]	mA
	Run mode 1 (SRAM loop)	V_{DD25} = 2.50 V Code= while(1){} executed in SRAM Peripherals = All ON System Clock = 50 MHz (with PLL)	3	pending[a]	102	pending[a]	mA
	Run mode 2 (SRAM loop)	V_{DD25} = 2.50 V Code= while(1){} executed in SRAM Peripherals = All OFF System Clock = 50 MHz (with PLL)	0	pending[a]	47	pending[a]	mA
I_{DD_SLEEP}	Sleep mode	V_{DD25} = 2.50 V Peripherals = All OFF System Clock = 50 MHz (with PLL)	0	pending[a]	17	pending[a]	mA
$I_{DD_DEEPSLEEP}$	Deep-Sleep mode	LDO = 2.25 V Peripherals = All OFF System Clock = IOSC30KHZ/64	0.143	pending[a]	0.18	pending[a]	mA

a. Pending characterization completion.

20.1.6 Flash Memory Characteristics

Table 20-6. Flash Memory Characteristics

Parameter	Parameter Name	Min	Nom	Max	Unit
PE_{CYC}	Number of guaranteed program/erase cycles before failure[a]	10,000	100,000	-	cycles
T_{RET}	Data retention at average operating temperature of 85˚C	10	-	-	years
T_{PROG}	Word program time	20	-	-	µs
T_{ERASE}	Page erase time	20	-	-	ms
T_{ME}	Mass erase time	-	-	250	ms

a. A program/erase cycle is defined as switching the bits from 1-> 0 -> 1.

20.2 AC Characteristics

20.2.1 Load Conditions

Unless otherwise specified, the following conditions are true for all timing measurements. Timing measurements are for 4-mA drive strength.

Figure 20-1. Load Conditions

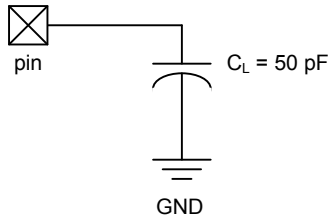

20.2.2 Clocks

Table 20-7. Phase Locked Loop (PLL) Characteristics

Parameter	Parameter Name	Min	Nom	Max	Unit
$f_{ref_crystal}$	Crystal reference[a]	3.579545	-	16.384	MHz
f_{ref_ext}	External clock reference[a]	3.579545	-	16.384	MHz
f_{pll}	PLL frequency[b]	-	400	-	MHz
T_{READY}	PLL lock time	-	-	0.5	ms

a. The exact value is determined by the crystal value programmed into the XTAL field of the **Run-Mode Clock Configuration (RCC)** register.

b. PLL frequency is automatically calculated by the hardware based on the XTAL field of the **RCC** register.

Table 20-8 on page 676 shows the actual frequency of the PLL based on the crystal frequency used (defined by the XTAL field in the **RCC** register).

Table 20-8. Actual PLL Frequency

XTAL	Crystal Frequency (MHz)	PLL Frequency (MHz)	Error
0x04	3.5795	400.904	0.0023%
0x05	3.6864	398.1312	0.0047%
0x06	4.0	400	-
0x07	4.096	401.408	0.0035%
0x08	4.9152	398.1312	0.0047%
0x09	5.0	400	-
0x0A	5.12	399.36	0.0016%
0x0B	6.0	400	-
0x0C	6.144	399.36	0.0016%
0x0D	7.3728	398.1312	0.0047%
0x0E	8.0	400	0.0047%
0x0F	8.192	398.6773333	0.0033%
0x10	10.0	400	-
0x11	12.0	400	-

Table 20-8. Actual PLL Frequency *(continued)*

XTAL	Crystal Frequency (MHz)	PLL Frequency (MHz)	Error
0x12	12.288	401.408	0.0035%
0x13	13.56	397.76	0.0056%
0x14	14.318	400.90904	0.0023%
0x15	16.0	400	-
0x16	16.384	404.1386667	0.010%

Table 20-9. Clock Characteristics

Parameter	Parameter Name	Min	Nom	Max	Unit
f_{IOSC}	Internal 12 MHz oscillator frequency	8.4	12	15.6	MHz
$f_{IOSC30KHZ}$	Internal 30 KHz oscillator frequency	15	30	45	KHz
f_{MOSC}	Main oscillator frequency	1	-	16.384	MHz
t_{MOSC_per}	Main oscillator period	61	-	1000	ns
$f_{ref_crystal_bypass}$	Crystal reference using the main oscillator (PLL in BYPASS mode)[a]	1	-	16.384	MHz
$f_{ref_ext_bypass}$	External clock reference (PLL in BYPASS mode)[a]	0	-	50	MHz
f_{system_clock}	System clock	0	-	50	MHz

a. The ADC must be clocked from the PLL or directly from a 16-MHz clock source to operate properly.

Table 20-10. Crystal Characteristics

Parameter Name	Value						Units
Frequency	16	12	8	6	4	3.5	MHz
Frequency tolerance[a]	±50	±50	±50	±50	±50	±50	ppm
Oscillation mode	Parallel	Parallel	Parallel	Parallel	Parallel	Parallel	-
Motional capacitance (typ)	13.9	18.5	27.8	37.0	55.6	63.5	pF
Motional inductance (typ)	7.15	9.5	14.3	19.1	28.6	32.7	mH
Equivalent series resistance (max)	80	100	120	160	200	220	Ω
Shunt capacitance (max)	10	10	10	10	10	10	pF
Load capacitance (typ)	16	16	16	16	16	16	pF
Drive level (typ)	100	100	100	100	100	100	µW

a. This tolerance provides a guard band for temperature stability and aging drift.

20.2.2.1 System Clock Specifications with ADC Operation

Table 20-11. System Clock Characteristics with ADC Operation

Parameter	Parameter Name	Min	Nom	Max	Unit
f_{sysadc}	System clock frequency when the ADC module is operating (when PLL is bypassed)	16	-	-	MHz

20.2.3 JTAG and Boundary Scan

Table 20-12. JTAG Characteristics

Parameter No.	Parameter	Parameter Name	Min	Nom	Max	Unit
J1	f_{TCK}	TCK operational clock frequency	0	-	10	MHz
J2	t_{TCK}	TCK operational clock period	100	-	-	ns
J3	t_{TCK_LOW}	TCK clock Low time	-	$t_{TCK}/2$	-	ns
J4	t_{TCK_HIGH}	TCK clock High time	-	$t_{TCK}/2$	-	ns
J5	t_{TCK_R}	TCK rise time	0	-	10	ns
J6	t_{TCK_F}	TCK fall time	0	-	10	ns
J7	t_{TMS_SU}	TMS setup time to TCK rise	20	-	-	ns
J8	t_{TMS_HLD}	TMS hold time from TCK rise	20	-	-	ns
J9	t_{TDI_SU}	TDI setup time to TCK rise	25	-	-	ns
J10	t_{TDI_HLD}	TDI hold time from TCK rise	25	-	-	ns
J11 t_{TDO_ZDV}	TCK fall to Data Valid from High-Z	2-mA drive	-	23	35	ns
		4-mA drive		15	26	ns
		8-mA drive		14	25	ns
		8-mA drive with slew rate control		18	29	ns
J12 t_{TDO_DV}	TCK fall to Data Valid from Data Valid	2-mA drive	-	21	35	ns
		4-mA drive		14	25	ns
		8-mA drive		13	24	ns
		8-mA drive with slew rate control		18	28	ns
J13 t_{TDO_DVZ}	TCK fall to High-Z from Data Valid	2-mA drive	-	9	11	ns
		4-mA drive		7	9	ns
		8-mA drive		6	8	ns
		8-mA drive with slew rate control		7	9	ns

Figure 20-2. JTAG Test Clock Input Timing

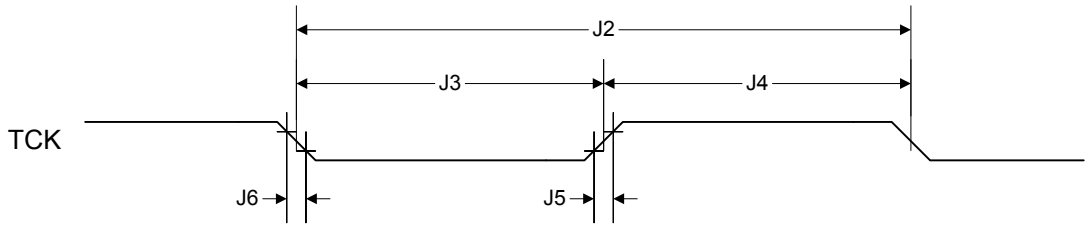

Figure 20-3. JTAG Test Access Port (TAP) Timing

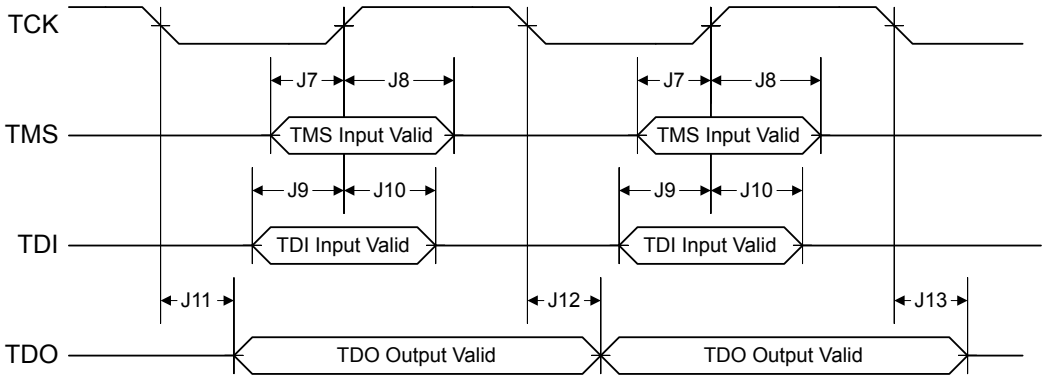

20.2.4 Reset

Table 20-13. Reset Characteristics

Parameter No.	Parameter	Parameter Name	Min	Nom	Max	Unit
R1	V_{TH}	Reset threshold	-	2.0	-	V
R2	V_{BTH}	Brown-Out threshold	2.85	2.9	2.95	V
R3	T_{POR}	Power-On Reset timeout	-	10	-	ms
R4	T_{BOR}	Brown-Out timeout	-	500	-	µs
R5	T_{IRPOR}	Internal reset timeout after POR	6	-	11	ms
R6	T_{IRBOR}	Internal reset timeout after BOR[a]	0	-	1	µs
R7	T_{IRHWR}	Internal reset timeout after hardware reset ($\overline{RST}$ pin)	0	-	1	ms
R8	T_{IRSWR}	Internal reset timeout after software-initiated system reset [a]	2.5	-	20	µs
R9	T_{IRWDR}	Internal reset timeout after watchdog reset[a]	2.5	-	20	µs
R10	$T_{VDDRISE}$	Supply voltage (V_{DD}) rise time (0V-3.3V)	-	-	100	ms
R11	T_{MIN}	Minimum $\overline{RST}$ pulse width	2	-	-	µs

a. 20 * t_{MOSC_per}

Figure 20-4. External Reset Timing ($\overline{RST}$)

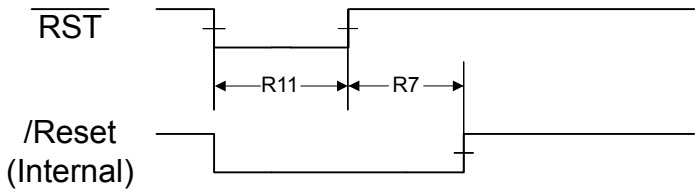

Figure 20-5. Power-On Reset Timing

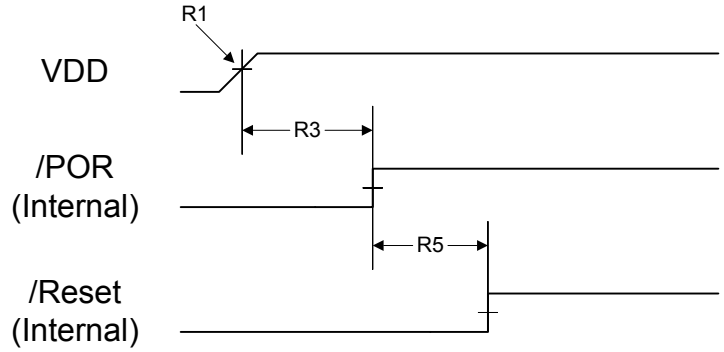

Figure 20-6. Brown-Out Reset Timing

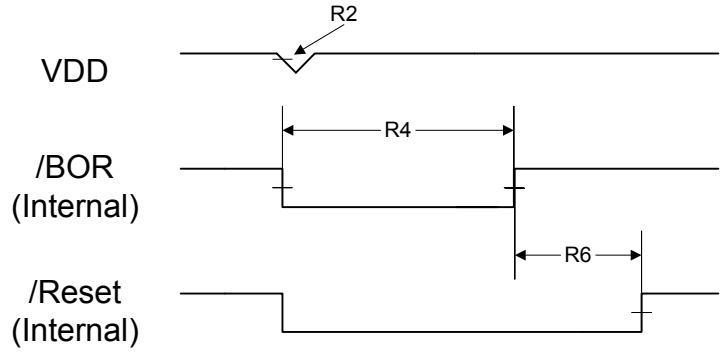

Figure 20-7. Software Reset Timing

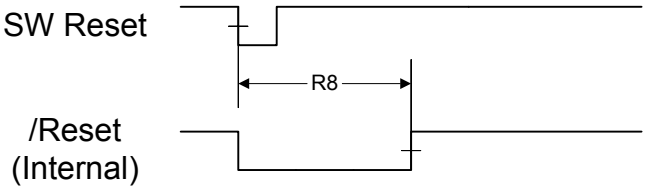

Figure 20-8. Watchdog Reset Timing

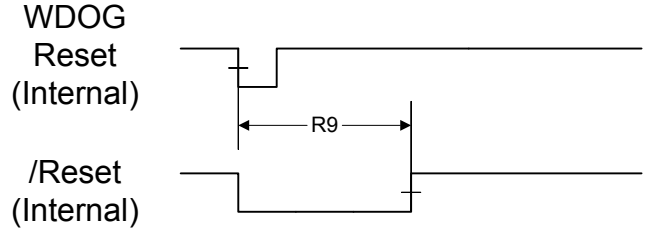

20.2.5 Sleep Modes

Table 20-14. Sleep Modes AC Characteristics[a]

Parameter No	Parameter	Parameter Name	Min	Nom	Max	Unit
D1	t_{WAKE_S}	Time to wake from interrupt in sleep or deep-sleep mode, not using the PLL	-	-	7	system clocks
D2	$t_{WAKE_PLL_S}$	Time to wake from interrupt in sleep or deep-sleep mode when using the PLL	-	-	T_{READY}	ms

a. Values in this table assume the IOSC is the clock source during sleep or deep-sleep mode.

20.2.6 General-Purpose I/O (GPIO)

Note: All GPIOs are 5 V-tolerant.

Table 20-15. GPIO Characteristics

Parameter	Parameter Name	Condition	Min	Nom	Max	Unit
t_{GPIOR}	GPIO Rise Time (from 20% to 80% of V_{DD})	2-mA drive	-	17	26	ns
		4-mA drive		9	13	ns
		8-mA drive		6	9	ns
		8-mA drive with slew rate control		10	12	ns
t_{GPIOF}	GPIO Fall Time (from 80% to 20% of V_{DD})	2-mA drive	-	17	25	ns
		4-mA drive		8	12	ns
		8-mA drive		6	10	ns
		8-mA drive with slew rate control		11	13	ns

20.2.7 Analog-to-Digital Converter

Table 20-16. ADC Characteristics[a]

Parameter	Parameter Name	Min	Nom	Max	Unit
V_{ADCIN}	Maximum single-ended, full-scale analog input voltage	-	-	3.0	V
	Minimum single-ended, full-scale analog input voltage	0.0	-	-	V
	Maximum differential, full-scale analog input voltage	-	-	1.5	V
	Minimum differential, full-scale analog input voltage	0.0	-	-	V
N	Resolution		10		bits
f_{ADC}	ADC internal clock frequency[b]	14	16	18	MHz
$t_{ADCCONV}$	Conversion time[c]		2		µs
$f_{ADCCONV}$	Conversion rate[c]		500		k samples/s
t_{LT}	Latency from trigger to start of conversion	-	2	-	system clocks
I_L	ADC input leakage	-	-	±3.0	µA
R_{ADC}	ADC equivalent resistance	-	-	10	kΩ
C_{ADC}	ADC equivalent capacitance	0.9	1.0	1.1	pF
E_L	Integral nonlinearity error	-	-	±3	LSB
E_D	Differential nonlinearity error	-	-	±2	LSB
E_O	Offset error	-	-	+6[d]	LSB

Table 20-16. ADC Characteristics *(continued)*

Parameter	Parameter Name	Min	Nom	Max	Unit
E_G	Full-scale gain error	-	-	±3	LSB
E_{TS}	Temperature sensor accuracy	-	-	±5	°C

a. The ADC reference voltage is 3.0 V. This reference voltage is internally generated from the 3.3 VDDA supply by a band gap circuit.

b. The ADC must be clocked from the PLL or directly from an external clock source to operate properly.

c. The conversion time and rate scale from the specified number if the ADC internal clock frequency is any value other than 16 MHz.

d. The offset error listed above is the conversion result with 0 V applied to the ADC input.

Figure 20-9. ADC Input Equivalency Diagram

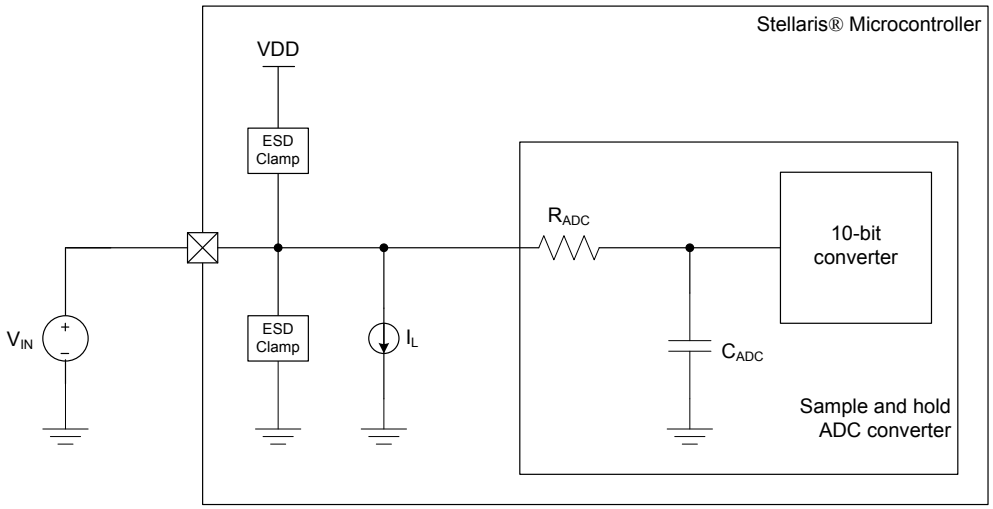

Table 20-17. ADC Module Internal Reference Characteristics

Parameter	Parameter Name	Min	Nom	Max	Unit
V_{REFI}	Internal voltage reference for ADC	-	3.0	-	V
E_{IR}	Internal voltage reference error	-	-	±2.5	%

20.2.8 Synchronous Serial Interface (SSI)

Table 20-18. SSI Characteristics

Parameter No.	Parameter	Parameter Name	Min	Nom	Max	Unit
S1	t_{clk_per}	`SSIClk` cycle time	2	-	65024	system clocks
S2	t_{clk_high}	`SSIClk` high time	-	0.5	-	t clk_per
S3	t_{clk_low}	`SSIClk` low time	-	0.5	-	t clk_per
S4	t_{clkrf}	`SSIClk` rise/fall time[a]	-	6	10	ns
S5	t_{DMd}	Data from master valid delay time	0	-	1	system clocks
S6	t_{DMs}	Data from master setup time	1	-	-	system clocks
S7	t_{DMh}	Data from master hold time	2	-	-	system clocks
S8	t_{DSs}	Data from slave setup time	1	-	-	system clocks

Table 20-18. SSI Characteristics *(continued)*

Parameter No.	Parameter	Parameter Name	Min	Nom	Max	Unit
S9	t_{DSh}	Data from slave hold time	2	-	-	system clocks

a. Note that the delays shown are using 8-mA drive strength.

Figure 20-10. SSI Timing for TI Frame Format (FRF=01), Single Transfer Timing Measurement

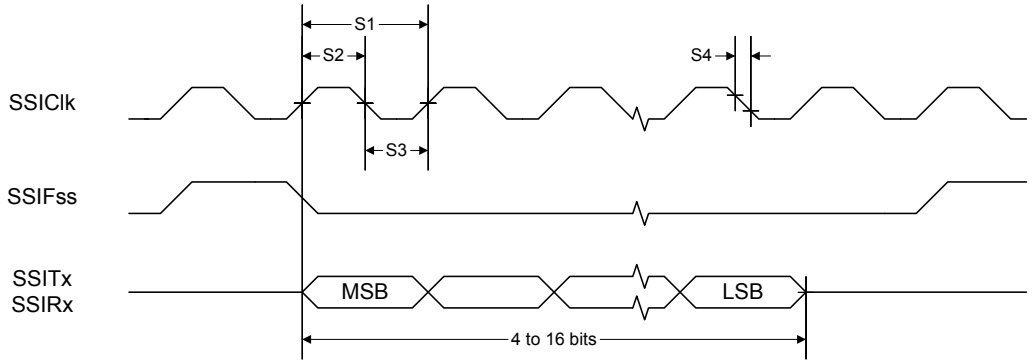

Figure 20-11. SSI Timing for MICROWIRE Frame Format (FRF=10), Single Transfer

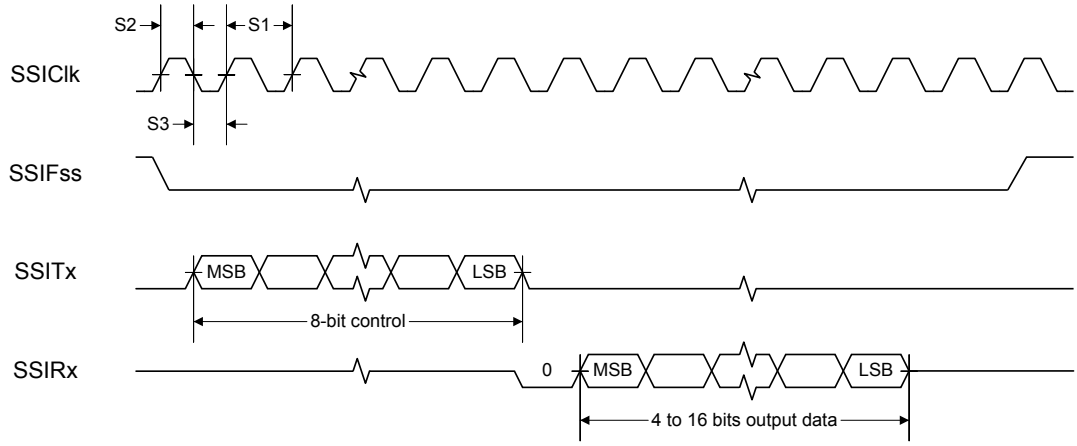

Figure 20-12. SSI Timing for SPI Frame Format (FRF=00), with SPH=1

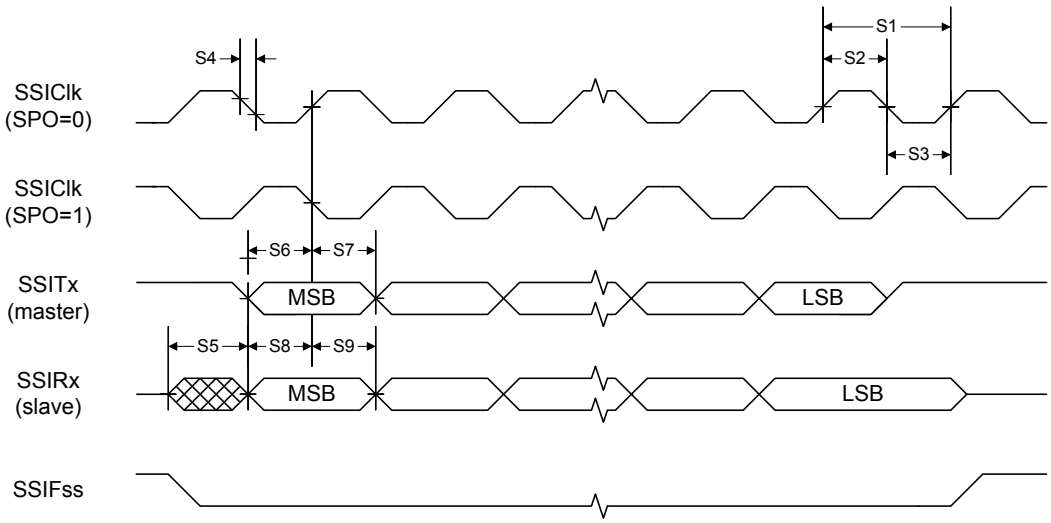

A Boot Loader

A.1 Boot Loader

The Stellaris® Boot Loader is executed from the ROM when flash is empty and is used to download code to the flash memory of a device without the use of a debug interface. The boot loader uses a simple packet interface to provide synchronous communication with the device. The boot loader runs off the internal oscillator and does not enable the PLL, so its speed is determined by the speed of the internal oscillator. The following serial interfaces can be used:

- UART0
- SSI0

For simplicity, both the data format and communication protocol are identical for all serial interfaces.

See the *Stellaris Boot Loader User's Guide* for information on the boot loader software.

A.2 Interfaces

Once communication with the boot loader is established via one of the serial interfaces, that interface is used until the boot loader is reset or new code takes over. For example, once you start communicating using the SSI port, communications with the boot loader via the UART are disabled until the device is reset.

A.2.1 UART

The Universal Asynchronous Receivers/Transmitters (UART) communication uses a fixed serial format of 8 bits of data, no parity, and 1 stop bit. The baud rate used for communication is automatically detected by the boot loader and can be any valid baud rate supported by the host and the device. The auto detection sequence requires that the baud rate should be no more than 1/32 the internal oscillator frequency of the board that is running the boot loader (which is at least 8.4 MHz, providing support for up to 262,500 baud). This is actually the same as the hardware limitation for the maximum baud rate for any UART on a Stellaris device which is calculated as follows:

```
Max Baud Rate = System Clock Frequency / 16
```

In order to determine the baud rate, the boot loader needs to determine the relationship between the internal oscillator and the baud rate. This is enough information for the boot loader to configure its UART to the same baud rate as the host. This automatic baud-rate detection allows the host to use any valid baud rate that it wants to communicate with the device.

The method used to perform this automatic synchronization relies on the host sending the boot loader two bytes that are both 0x55. This generates a series of pulses to the boot loader that it can use to calculate the ratios needed to program the UART to match the host’s baud rate. After the host sends the pattern, it attempts to read back one byte of data from the UART. The boot loader returns the value of 0xCC to indicate successful detection of the baud rate. If this byte is not received after at least twice the time required to transfer the two bytes, the host can resend another pattern of 0x55, 0x55, and wait for the 0xCC byte again until the boot loader acknowledges that it has received a synchronization pattern correctly. For example, the time to wait for data back from the boot loader should be calculated as at least 2*(20(bits/sync)/baud rate (bits/sec)). For a baud rate of 115200, this time is 2*(20/115200) or 0.35 ms.

A.2.2 SSI

The Synchronous Serial Interface (SSI) port also uses a fixed serial format for communications, with the framing defined as Motorola format with SPH set to 1 and SPO set to 1. See “Frame Formats” on page 512 in the SSI chapter for more information on formats for this transfer protocol. Like the UART, this interface has hardware requirements that limit the maximum speed that the SSI clock can run. This allows the SSI clock to be at most 1/12 the the internal oscillator frequency of the board running the boot loader (which is at least 8.4 MHz, providing support for up to 700 KHz).. Since the host device is the master, the SSI on the boot loader device does not need to determine the clock as it is provided directly by the host.

A.3 Packet Handling

All communications, with the exception of the UART auto-baud, are done via defined packets that are acknowledged (ACK) or not acknowledged (NAK) by the devices. The packets use the same format for receiving and sending packets, including the method used to acknowledge successful or unsuccessful reception of a packet.

A.3.1 Packet Format

All packets sent and received from the device use the following byte-packed format.

```
struct
{
 unsigned char ucSize;
 unsigned char ucCheckSum;
 unsigned char Data[];
};
```

ucSize	The first byte received holds the total size of the transfer including the size and checksum bytes.
ucChecksum	This holds a simple checksum of the bytes in the data buffer only. The algorithm is Data[0]+Data[1]+…+ Data[`ucSize`-3].
Data	This is the raw data intended for the device, which is formatted in some form of command interface. There should be `ucSize`–2 bytes of data provided in this buffer to or from the device.

A.3.2 Sending Packets

The actual bytes of the packet can be sent individually or all at once; the only limitation is that commands that cause flash memory access should limit the download sizes to prevent losing bytes during flash programming. This limitation is discussed further in the section that describes the boot loader command, COMMAND_SEND_DATA (see “COMMAND_SEND_DATA (0x24)” on page 688).

Once the packet has been formatted correctly by the host, it should be sent out over the UART or SSI interface. Then the host should poll the UART or SSI interface for the first non-zero data returned from the device. The first non-zero byte will either be an ACK (0xCC) or a NAK (0x33) byte from the device indicating the packet was received successfully (ACK) or unsuccessfully (NAK). This does not indicate that the actual contents of the command issued in the data portion of the packet were valid, just that the packet was received correctly.

A.3.3 Receiving Packets

The boot loader sends a packet of data in the same format that it receives a packet. The boot loader may transfer leading zero data before the first actual byte of data is sent out. The first non-zero byte is the size of the packet followed by a checksum byte, and finally followed by the data itself. There is no break in the data after the first non-zero byte is sent from the boot loader. Once the device communicating with the boot loader receives all the bytes, it must either ACK or NAK the packet to indicate that the transmission was successful. The appropriate response after sending a NAK to the boot loader is to resend the command that failed and request the data again. If needed, the host may send leading zeros before sending down the ACK/NAK signal to the boot loader, as the boot loader only accepts the first non-zero data as a valid response. This zero padding is needed by the SSI interface in order to receive data to or from the boot loader.

A.4 Commands

The next section defines the list of commands that can be sent to the boot loader. The first byte of the data should always be one of the defined commands, followed by data or parameters as determined by the command that is sent.

A.4.1 COMMAND_PING (0X20)

This command simply accepts the command and sets the global status to success. The format of the packet is as follows:

```
Byte[0] = 0x03;
Byte[1] = checksum(Byte[2]);
Byte[2] = COMMAND_PING;
```

The ping command has 3 bytes and the value for `COMMAND_PING` is 0x20 and the checksum of one byte is that same byte, making Byte[1] also 0x20. Since the ping command has no real return status, the receipt of an ACK can be interpreted as a successful ping to the boot loader.

A.4.2 COMMAND_DOWNLOAD (0x21)

This command is sent to the boot loader to indicate where to store data and how many bytes will be sent by the `COMMAND_SEND_DATA` commands that follow. The command consists of two 32-bit values that are both transferred MSB first. The first 32-bit value is the address to start programming data into, while the second is the 32-bit size of the data that will be sent. This command also triggers an erase of the full area to be programmed so this command takes longer than other commands. This results in a longer time to receive the ACK/NAK back from the board. This command should be followed by a `COMMAND_GET_STATUS` to ensure that the Program Address and Program size are valid for the device running the boot loader.

The format of the packet to send this command is a follows:

```
Byte[0] = 11
Byte[1] = checksum(Bytes[2:10])
Byte[2] = COMMAND_DOWNLOAD
Byte[3] = Program Address [31:24]
Byte[4] = Program Address [23:16]
Byte[5] = Program Address [15:8]
Byte[6] = Program Address [7:0]
Byte[7] = Program Size [31:24]
Byte[8] = Program Size [23:16]
```

```
Byte[9] = Program Size [15:8]
Byte[10] = Program Size [7:0]
```

A.4.3 COMMAND_RUN (0x22)

This command is used to tell the boot loader to execute from the address passed as the parameter in this command. This command consists of a single 32-bit value that is interpreted as the address to execute. The 32-bit value is transmitted MSB first and the boot loader responds with an ACK signal back to the host device before actually executing the code at the given address. This allows the host to know that the command was received successfully and the code is now running.

```
Byte[0] = 7
Byte[1] = checksum(Bytes[2:6])
Byte[2] = COMMAND_RUN
Byte[3] = Execute Address[31:24]
Byte[4] = Execute Address[23:16]
Byte[5] = Execute Address[15:8]
Byte[6] = Execute Address[7:0]
```

A.4.4 COMMAND_GET_STATUS (0x23)

This command returns the status of the last command that was issued. Typically, this command should be sent after every command to ensure that the previous command was successful or to properly respond to a failure. The command requires one byte in the data of the packet and should be followed by reading a packet with one byte of data that contains a status code. The last step is to ACK or NAK the received data so the boot loader knows that the data has been read.

```
Byte[0] = 0x03
Byte[1] = checksum(Byte[2])
Byte[2] = COMMAND_GET_STATUS
```

A.4.5 COMMAND_SEND_DATA (0x24)

This command should only follow a `COMMAND_DOWNLOAD` command or another `COMMAND_SEND_DATA` command if more data is needed. Consecutive send data commands automatically increment address and continue programming from the previous location. For packets which do not contain the final portion of the downloaded data, a multiple of four bytes should always be transferred. The command terminates programming once the number of bytes indicated by the `COMMAND_DOWNLOAD` command has been received. Each time this function is called it should be followed by a `COMMAND_GET_STATUS` to ensure that the data was successfully programmed into the flash. If the boot loader sends a NAK to this command, the boot loader does not increment the current address to allow retransmission of the previous data. The following example shows a COMMAND_SEND_DATA packet with 8 bytes of packet data:

```
Byte[0] = 11
Byte[1] = checksum(Bytes[2:10])
Byte[2] = COMMAND_SEND_DATA
Byte[3] = Data[0]
Byte[4] = Data[1]
Byte[5] = Data[2]
Byte[6] = Data[3]
Byte[7] = Data[4]
Byte[8] = Data[5]
```

```
Byte[9] = Data[6]
Byte[10] = Data[7]
```

A.4.6 COMMAND_RESET (0x25)

This command is used to tell the boot loader device to reset. Unlike the `COMMAND_RUN` command, this allows the initial stack pointer to be read by the hardware and set up for the new code. It can also be used to reset the boot loader if a critical error occurs and the host device wants to restart communication with the boot loader.

```
Byte[0] = 3
Byte[1] = checksum(Byte[2])
Byte[2] = COMMAND_RESET
```

The boot loader responds with an ACK signal back to the host device before actually executing the software reset to the device running the boot loader. This allows the host to know that the command was received successfully and the part will be reset.

B ROM DriverLib Functions

B.1 DriverLib Functions Included in the Integrated ROM

The Stellaris® Peripheral Driver Library (DriverLib) APIs that are available in the integrated ROM of the Stellaris family of devices are listed below. The detailed description of each function is available in the *Stellaris® ROM User's Guide*.

ROM_ADCHardwareOversampleConfigure
// Configures the hardware oversampling factor of the ADC.

ROM_ADCIntClear
// Clears sample sequence interrupt source.

ROM_ADCIntDisable
// Disables a sample sequence interrupt.

ROM_ADCIntEnable
// Enables a sample sequence interrupt.

ROM_ADCIntStatus
// Gets the current interrupt status.

ROM_ADCProcessorTrigger
// Causes a processor trigger for a sample sequence.

ROM_ADCSequenceConfigure
// Configures the trigger source and priority of a sample sequence.

ROM_ADCSequenceDataGet
// Gets the captured data for a sample sequence.

ROM_ADCSequenceDisable
// Disables a sample sequence.

ROM_ADCSequenceEnable
// Enables a sample sequence.

ROM_ADCSequenceOverflow
// Determines if a sample sequence overflow occurred.

ROM_ADCSequenceOverflowClear
// Clears the overflow condition on a sample sequence.

ROM_ADCSequenceStepConfigure
// Configure a step of the sample sequencer.

ROM_ADCSequenceUnderflow
// Determines if a sample sequence underflow occurred.

ROM_ADCSequenceUnderflowClear
// Clears the underflow condition on a sample sequence.

ROM_FlashErase
// Erases a block of flash.

ROM_FlashIntClear
// Clears flash controller interrupt sources.

ROM_FlashIntDisable
// Disables individual flash controller interrupt sources.

ROM_FlashIntEnable
// Enables individual flash controller interrupt sources.

ROM_FlashIntGetStatus
// Gets the current interrupt status.

ROM_FlashProgram
// Programs flash.

ROM_FlashProtectGet
// Gets the protection setting for a block of flash.

ROM_FlashProtectSave
// Saves the flash protection settings.

ROM_FlashProtectSet
// Sets the protection setting for a block of flash.

ROM_FlashUsecGet
// Gets the number of processor clocks per micro-second.

ROM_FlashUsecSet
// Sets the number of processor clocks per micro-second.

ROM_FlashUserGet
// Gets the user registers.

ROM_FlashUserSave
// Saves the user registers.

ROM_FlashUserSet
// Sets the user registers.

ROM_GPIODirModeGet
// Gets the direction and mode of a pin.

ROM_GPIODirModeSet
// Sets the direction and mode of the specified pin(s).

ROM_GPIOIntTypeGet
// Gets the interrupt type for a pin.

ROM_GPIOIntTypeSet
// Sets the interrupt type for the specified pin(s).

ROM_GPIOPadConfigGet
// Gets the pad configuration for a pin.

ROM_GPIOPadConfigSet
// Sets the pad configuration for the specified pin(s).

ROM_GPIOPinIntClear
// Clears the interrupt for the specified pin(s).

ROM_GPIOPinIntDisable
// Disables interrupts for the specified pin(s).

ROM_GPIOPinIntEnable
// Enables interrupts for the specified pin(s).

ROM_GPIOPinIntStatus
// Gets interrupt status for the specified GPIO port.

ROM_GPIOPinRead
// Reads the values present of the specified pin(s).

ROM_GPIOPinTypeCAN
// Configures pin(s) for use as a CAN device.

ROM_GPIOPinTypeGPIOInput
// Configures pin(s) for use as GPIO inputs.

ROM_GPIOPinTypeGPIOOutput
// Configures pin(s) for use as GPIO outputs.

ROM_GPIOPinTypeGPIOOutputOD
// Configures pin(s) for use as GPIO open drain outputs.

ROM_GPIOPinTypePWM
// Configures pin(s) for use by the PWM peripheral.

ROM_GPIOPinTypeQEI
// Configures pin(s) for use by the QEI peripheral.

ROM_GPIOPinTypeSSI
// Configures pin(s) for use by the SSI peripheral.

ROM_GPIOPinTypeTimer
// Configures pin(s) for use by the Timer peripheral.

ROM_GPIOPinTypeUART
// Configures pin(s) for use by the UART peripheral.

ROM_GPIOPinWrite
// Writes a value to the specified pin(s).

ROM_IntDisable
// Disables an interrupt.

ROM_IntEnable
// Enables an interrupt.

ROM_IntPriorityGet
// Gets the priority of an interrupt.

ROM_IntPriorityGroupingGet
// Gets the priority grouping of the interrupt controller.

ROM_IntPriorityGroupingSet
// Sets the priority grouping of the interrupt controller.

ROM_IntPrioritySet
// Sets the priority of an interrupt.

ROM_PWMDeadBandDisable
// Disables the PWM dead band output.

ROM_PWMDeadBandEnable
// Enables the PWM dead band output, and sets the dead band delays.

ROM_PWMFaultIntClear
// Clears the fault interrupt for a PWM module.

ROM_PWMGenConfigure
// Configures a PWM generator.

ROM_PWMGenDisable
// Disables the timer/counter for a PWM generator block.

ROM_PWMGenEnable
// Enables the timer/counter for a PWM generator block.

ROM_PWMGenIntClear
// Clears the specified interrupt(s) for the specified PWM generator block.

ROM_PWMGenIntStatus
// Gets interrupt status for the specified PWM generator block.

ROM_PWMGenIntTrigDisable
// Disables interrupts for the specified PWM generator block.

ROM_PWMGenIntTrigEnable
// Enables interrupts and triggers for the specified PWM generator block.

ROM_PWMGenPeriodGet
// Gets the period of a PWM generator block.

ROM_PWMGenPeriodSet
// Set the period of a PWM generator.

ROM_PWMIntDisable
// Disables generator and fault interrupts for a PWM module.

ROM_PWMIntEnable
// Enables generator and fault interrupts for a PWM module.

ROM_PWMIntStatus
// Gets the interrupt status for a PWM module.

ROM_PWMOutputFault
// Specifies the state of PWM outputs in response to a fault condition.

ROM_PWMOutputInvert
// Selects the inversion mode for PWM outputs.

ROM_PWMOutputState
// Enables or disables PWM outputs.

ROM_PWMPulseWidthGet
// Gets the pulse width of a PWM output.

ROM_PWMPulseWidthSet
// Sets the pulse width for the specified PWM output.

ROM_PWMSyncTimeBase
// Synchronizes the counters in one or multiple PWM generator blocks.

ROM_PWMSyncUpdate
// Synchronizes all pending updates.

ROM_QEIConfigure
// Configures the quadrature encoder.

ROM_QEIDirectionGet
// Gets the current direction of rotation.

ROM_QEIDisable
// Disables the quadrature encoder.

ROM_QEIEnable
// Enables the quadrature encoder.

ROM_QEIErrorGet
// Gets the encoder error indicator.

ROM_QEIIntClear
// Clears quadrature encoder interrupt sources.

ROM_QEIIntDisable
// Disables individual quadrature encoder interrupt sources.

ROM_QEIIntEnable
// Enables individual quadrature encoder interrupt sources.

ROM_QEIIntStatus
// Gets the current interrupt status.

ROM_QEIPositionGet
// Gets the current encoder position.

ROM_QEIPositionSet
// Sets the current encoder position.

ROM_QEIVelocityConfigure
// Configures the velocity capture.

ROM_QEIVelocityDisable
// Disables the velocity capture.

ROM_QEIVelocityEnable
// Enables the velocity capture.

ROM_QEIVelocityGet
// Gets the current encoder speed.

ROM_SSIConfigSetExpClk
// Configures the synchronous serial interface.

ROM_SSIDataGet
// Gets a data element from the SSI receive FIFO.

ROM_SSIDataGetNonBlocking
// Gets a data element from the SSI receive FIFO.

ROM_SSIDataPut
// Puts a data element into the SSI transmit FIFO.

ROM_SSIDataPutNonBlocking
// Puts a data element into the SSI transmit FIFO.

ROM_SSIDisable
// Disables the synchronous serial interface.

ROM_SSIEnable
// Enables the synchronous serial interface.

ROM_SSIIntClear
// Clears SSI interrupt sources.

ROM_SSIIntDisable
// Disables individual SSI interrupt sources.

ROM_SSIIntEnable
// Enables individual SSI interrupt sources.

ROM_SSIIntStatus
// Gets the current interrupt status.

ROM_SysCtlADCSpeedGet
// Gets the sample rate of the ADC.

ROM_SysCtlADCSpeedSet
// Sets the sample rate of the ADC.

ROM_SysCtlClockGet
// Gets the processor clock rate.

ROM_SysCtlClockSet
// Sets the clocking of the device.

ROM_SysCtlDeepSleep
// Puts the processor into deep-sleep mode.

ROM_SysCtlFlashSizeGet
// Gets the size of the flash.

ROM_SysCtlGPIOAHBDisable
// Disables a GPIO peripheral for access from the AHB.

ROM_SysCtlGPIOAHBEnable
// Enables a GPIO peripheral for access from the AHB.

ROM_SysCtlIntClear
// Clears system control interrupt sources.

ROM_SysCtlIntDisable
// Disables individual system control interrupt sources.

ROM_SysCtlIntEnable
// Enables individual system control interrupt sources.

ROM_SysCtlIntStatus
// Gets the current interrupt status.

ROM_SysCtlLDOGet
// Gets the output voltage of the LDO.

ROM_SysCtlLDOSet
// Sets the output voltage of the LDO.

ROM_SysCtlPeripheralClockGating
// Controls peripheral clock gating in sleep and deep-sleep mode.

ROM_SysCtlPeripheralDeepSleepDisable
// Disables a peripheral in deep-sleep mode.

ROM_SysCtlPeripheralDeepSleepEnable
// Enables a peripheral in deep-sleep mode.

ROM_SysCtlPeripheralDisable
// Disables a peripheral.

ROM_SysCtlPeripheralEnable
// Enables a peripheral.

ROM_SysCtlPeripheralPresent
// Determines if a peripheral is present.

ROM_SysCtlPeripheralReset
// Performs a software reset of a peripheral.

ROM_SysCtlPeripheralSleepDisable
// Disables a peripheral in sleep mode.

ROM_SysCtlPeripheralSleepEnable
// Enables a peripheral in sleep mode.

ROM_SysCtlPinPresent
// Determines if a pin is present.

ROM_SysCtlPWMClockGet
// Gets the current PWM clock configuration.

ROM_SysCtlPWMClockSet
// Sets the PWM clock configuration.

ROM_SysCtlReset
// Resets the device.

ROM_SysCtlResetCauseClear
// Clears reset reasons.

ROM_SysCtlResetCauseGet
// Gets the reason for a reset.

ROM_SysCtlSleep
// Puts the processor into sleep mode.

ROM_SysCtlSRAMSizeGet
// Gets the size of the SRAM.

ROM_SysTickDisable
// Disables the SysTick counter.

ROM_SysTickEnable
// Enables the SysTick counter.

ROM_SysTickIntDisable
// Disables the SysTick interrupt.

ROM_SysTickIntEnable
// Enables the SysTick interrupt.

ROM_SysTickPeriodGet
// Gets the period of the SysTick counter.

ROM_SysTickPeriodSet
// Sets the period of the SysTick counter.

ROM_SysTickValueGet
// Gets the current value of the SysTick counter.

ROM_TimerConfigure
// Configures the timer(s).

ROM_TimerControlEvent
// Controls the event type.

ROM_TimerControlLevel
// Controls the output level.

ROM_TimerControlStall
// Controls the stall handling.

ROM_TimerControlTrigger
// Enables or disables the trigger output.

ROM_TimerDisable
// Disables the timer(s).

ROM_TimerEnable
// Enables the timer(s).

ROM_TimerIntClear
// Clears timer interrupt sources.

ROM_TimerIntDisable
// Disables individual timer interrupt sources.

ROM_TimerIntEnable
// Enables individual timer interrupt sources.

ROM_TimerIntStatus
// Gets the current interrupt status.

ROM_TimerLoadGet
// Gets the timer load value.

ROM_TimerLoadSet
// Sets the timer load value.

ROM_TimerMatchGet
// Gets the timer match value.

ROM_TimerMatchSet
// Sets the timer match value.

ROM_TimerPrescaleGet
// Get the timer prescale value.

ROM_TimerPrescaleSet
// Set the timer prescale value.

ROM_TimerRTCDisable
// Disable RTC counting.

ROM_TimerRTCEnable
// Enable RTC counting.

ROM_TimerValueGet
// Gets the current timer value.

ROM_UARTBreakCtl
// Causes a BREAK to be sent.

ROM_UARTCharGet
// Waits for a character from the specified port.

ROM_UARTCharGetNonBlocking
// Receives a character from the specified port.

ROM_UARTCharPut
// Waits to send a character from the specified port.

ROM_UARTCharPutNonBlocking
// Sends a character to the specified port.

ROM_UARTCharsAvail
// Determines if there are any characters in the receive FIFO.

ROM_UARTConfigGetExpClk
// Gets the current configuration of a UART.

ROM_UARTConfigSetExpClk
// Sets the configuration of a UART.

ROM_UARTDisable
// Disables transmitting and receiving.

ROM_UARTDisableSIR
// Disables SIR (IrDA) mode on the specified UART.

ROM_UARTEnable
// Enables transmitting and receiving.

ROM_UARTEnableSIR
// Enables SIR (IrDA) mode on specified UART.

ROM_UARTFIFOLevelGet
// Gets the FIFO level at which interrupts are generated.

ROM_UARTFIFOLevelSet
// Sets the FIFO level at which interrupts are generated.

ROM_UARTIntClear
// Clears UART interrupt sources.

ROM_UARTIntDisable
// Disables individual UART interrupt sources.

ROM_UARTIntEnable
// Enables individual UART interrupt sources.

ROM_UARTIntStatus
// Gets the current interrupt status.

ROM_UARTParityModeGet
// Gets the type of parity currently being used.

ROM_UARTParityModeSet
// Sets the type of parity.

ROM_UARTSpaceAvail
// Determines if there is any space in the transmit FIFO.

ROM_UpdateSSI
// Starts an update over the SSI0 interface.

ROM_UpdateUART
// Starts an update over the UART0 interface.

ROM_WatchdogEnable
// Enables the watchdog timer.

ROM_WatchdogIntClear
// Clears the watchdog timer interrupt.

ROM_WatchdogIntEnable
// Enables the watchdog timer interrupt.

ROM_WatchdogIntStatus
// Gets the current watchdog timer interrupt status.

ROM_WatchdogLock
// Enables the watchdog timer lock mechanism.

ROM_WatchdogLockState
// Gets the state of the watchdog timer lock mechanism.

ROM_WatchdogReloadGet
// Gets the watchdog timer reload value.

ROM_WatchdogReloadSet
// Sets the watchdog timer reload value.

ROM_WatchdogResetDisable
// Disables the watchdog timer reset.

ROM_WatchdogResetEnable
// Enables the watchdog timer reset.

ROM_WatchdogRunning
// Determines if the watchdog timer is enabled.

ROM_WatchdogStallDisable
// Disables stalling of the watchdog timer during debug events.

ROM_WatchdogStallEnable
// Enables stalling of the watchdog timer during debug events.

ROM_WatchdogUnlock
// Disables the watchdog timer lock mechanism.

ROM_WatchdogValueGet
// Gets the current watchdog timer value.

C Register Quick Reference

31	30	29	28	27	26	25	24	23	22	21	20	19	18	17	16
15	14	13	12	11	10	9	8	7	6	5	4	3	2	1	0
The Cortex-M3 Processor															
R0, type R/W, , reset - (see page 56)															
DATA															
DATA															
R1, type R/W, , reset - (see page 56)															
DATA															
DATA															
R2, type R/W, , reset - (see page 56)															
DATA															
DATA															
R3, type R/W, , reset - (see page 56)															
DATA															
DATA															
R4, type R/W, , reset - (see page 56)															
DATA															
DATA															
R5, type R/W, , reset - (see page 56)															
DATA															
DATA															
R6, type R/W, , reset - (see page 56)															
DATA															
DATA															
R7, type R/W, , reset - (see page 56)															
DATA															
DATA															
R8, type R/W, , reset - (see page 56)															
DATA															
DATA															
R9, type R/W, , reset - (see page 56)															
DATA															
DATA															
R10, type R/W, , reset - (see page 56)															
DATA															
DATA															
R11, type R/W, , reset - (see page 56)															
DATA															
DATA															
R12, type R/W, , reset - (see page 56)															
DATA															
DATA															
SP, type R/W, , reset - (see page 57)															
SP															
SP															
LR, type R/W, , reset 0xFFFF.FFFF (see page 58)															
LINK															
LINK															
PC, type R/W, , reset - (see page 59)															
PC															
PC															

31	30	29	28	27	26	25	24	23	22	21	20	19	18	17	16
15	14	13	12	11	10	9	8	7	6	5	4	3	2	1	0
PSR, type R/W, , reset 0x0100.0000 (see page 60)															
N	Z	C	V	Q	ICI / IT		THUMB								
ICI / IT									ISRNUM						
PRIMASK, type R/W, , reset 0x0000.0000 (see page 64)															
															PRIMASK
FAULTMASK, type R/W, , reset 0x0000.0000 (see page 65)															
															FAULTMASK
BASEPRI, type R/W, , reset 0x0000.0000 (see page 66)															
								BASEPRI							
CONTROL, type R/W, , reset 0x0000.0000 (see page 67)															
														ASP	TMPL
Cortex-M3 Peripherals **System Timer (SysTick) Registers** Base 0xE000.E000															
STCTRL, type R/W, offset 0x010, reset 0x0000.0000															
															COUNT
													CLK_SRC	INTEN	ENABLE
STRELOAD, type R/W, offset 0x014, reset 0x0000.0000															
								RELOAD							
RELOAD															
STCURRENT, type R/WC, offset 0x018, reset 0x0000.0000															
								CURRENT							
CURRENT															
Cortex-M3 Peripherals **Nested Vectored Interrupt Controller (NVIC) Registers** Base 0xE000.E000															
EN0, type R/W, offset 0x100, reset 0x0000.0000															
INT															
INT															
EN1, type R/W, offset 0x104, reset 0x0000.0000															
INT															
DIS0, type R/W, offset 0x180, reset 0x0000.0000															
INT															
INT															
DIS1, type R/W, offset 0x184, reset 0x0000.0000															
INT															
PEND0, type R/W, offset 0x200, reset 0x0000.0000															
INT															
INT															
PEND1, type R/W, offset 0x204, reset 0x0000.0000															
INT															
UNPEND0, type R/W, offset 0x280, reset 0x0000.0000															
INT															
INT															

31	30	29	28	27	26	25	24	23	22	21	20	19	18	17	16
15	14	13	12	11	10	9	8	7	6	5	4	3	2	1	0
UNPEND1, type R/W, offset 0x284, reset 0x0000.0000															
INT															
ACTIVE0, type RO, offset 0x300, reset 0x0000.0000															
INT															
INT															
ACTIVE1, type RO, offset 0x304, reset 0x0000.0000															
INT															
PRI0, type R/W, offset 0x400, reset 0x0000.0000															
INTD								INTC							
INTB								INTA							
PRI1, type R/W, offset 0x404, reset 0x0000.0000															
INTD								INTC							
INTB								INTA							
PRI2, type R/W, offset 0x408, reset 0x0000.0000															
INTD								INTC							
INTB								INTA							
PRI3, type R/W, offset 0x40C, reset 0x0000.0000															
INTD								INTC							
INTB								INTA							
PRI4, type R/W, offset 0x410, reset 0x0000.0000															
INTD								INTC							
INTB								INTA							
PRI5, type R/W, offset 0x414, reset 0x0000.0000															
INTD								INTC							
INTB								INTA							
PRI6, type R/W, offset 0x418, reset 0x0000.0000															
INTD								INTC							
INTB								INTA							
PRI7, type R/W, offset 0x41C, reset 0x0000.0000															
INTD								INTC							
INTB								INTA							
PRI8, type R/W, offset 0x420, reset 0x0000.0000															
INTD								INTC							
INTB								INTA							
PRI9, type R/W, offset 0x424, reset 0x0000.0000															
INTD								INTC							
INTB								INTA							
PRI10, type R/W, offset 0x428, reset 0x0000.0000															
INTD								INTC							
INTB								INTA							
PRI11, type R/W, offset 0x42C, reset 0x0000.0000															
INTD								INTC							
INTB								INTA							
SWTRIG, type WO, offset 0xF00, reset 0x0000.0000															
										INTID					

31	30	29	28	27	26	25	24	23	22	21	20	19	18	17	16
15	14	13	12	11	10	9	8	7	6	5	4	3	2	1	0
Cortex-M3 Peripherals **System Control Block (SCB) Registers** Base 0xE000.E000															
CPUID, type RO, offset 0xD00, reset 0x411F.C231															
IMP								VAR				CON			
PARTNO												REV			
INTCTRL, type R/W, offset 0xD04, reset 0x0000.0000															
NMISET			PENDSV	UNPENDSV	PENDSTSET	PENDSTCLR		ISRPRE	ISRPEND				VECPEND		
VECPEND				RETBASE					VECACT						
VTABLE, type R/W, offset 0xD08, reset 0x0000.0000															
		BASE	OFFSET												
OFFSET															
APINT, type R/W, offset 0xD0C, reset 0xFA05.0000															
VECTKEY															
ENDIANESS					PRIGROUP								SYSRESREQ	VECTCLRACT	VECTRESET
SYSCTRL, type R/W, offset 0xD10, reset 0x0000.0000															
											SEVONPEND		SLEEPDEEP	SLEEPEXIT	
CFGCTRL, type R/W, offset 0xD14, reset 0x0000.0000															
						STKALIGN	BFHFNMIGN				DIV0	UNALIGNED		MAINPEND	BASETHR
SYSPRI1, type R/W, offset 0xD18, reset 0x0000.0000															
								USAGE							
BUS								MEM							
SYSPRI2, type R/W, offset 0xD1C, reset 0x0000.0000															
SVC															
SYSPRI3, type R/W, offset 0xD20, reset 0x0000.0000															
TICK								PENDSV							
								DEBUG							
SYSHNDCTRL, type R/W, offset 0xD24, reset 0x0000.0000															
													USAGE	BUS	MEM
SVC	BUSP	MEMP	USAGEP	TICK	PNDSV		MON	SVCA				USGA		BUSA	MEMA
FAULTSTAT, type R/W1C, offset 0xD28, reset 0x0000.0000															
						DIV0	UNALIGN					NOCP	INVPC	INVSTAT	UNDEF
BFARV			BSTKE	BUSTKE	IMPRE	PRECISE	IBUS	MMARV			MSTKE	MUSTKE		DERR	IERR
HFAULTSTAT, type R/W1C, offset 0xD2C, reset 0x0000.0000															
DBG	FORCED														
														VECT	
MMADDR, type R/W, offset 0xD34, reset -															
ADDR															
ADDR															
FAULTADDR, type R/W, offset 0xD38, reset -															
ADDR															
ADDR															
Cortex-M3 Peripherals **Memory Protection Unit (MPU) Registers** Base 0xE000.E000															
MPUTYPE, type RO, offset 0xD90, reset 0x0000.0800															
								IREGION							
DREGION															SEPARATE

31	30	29	28	27	26	25	24	23	22	21	20	19	18	17	16
15	14	13	12	11	10	9	8	7	6	5	4	3	2	1	0
MPUCTRL, type R/W, offset 0xD94, reset 0x0000.0000															
													PRIVDEFEN	HFNMIENA	ENABLE
MPUNUMBER, type R/W, offset 0xD98, reset 0x0000.0000															
													NUMBER		
MPUBASE, type R/W, offset 0xD9C, reset 0x0000.0000															
ADDR															
ADDR											VALID		REGION		
MPUBASE1, type R/W, offset 0xDA4, reset 0x0000.0000															
ADDR															
ADDR											VALID		REGION		
MPUBASE2, type R/W, offset 0xDAC, reset 0x0000.0000															
ADDR															
ADDR											VALID		REGION		
MPUBASE3, type R/W, offset 0xDB4, reset 0x0000.0000															
ADDR															
ADDR											VALID		REGION		
MPUATTR, type R/W, offset 0xDA0, reset 0x0000.0000															
			XN		AP					TEX			S	C	B
SRD										SIZE					ENABLE
MPUATTR1, type R/W, offset 0xDA8, reset 0x0000.0000															
			XN		AP					TEX			S	C	B
SRD										SIZE					ENABLE
MPUATTR2, type R/W, offset 0xDB0, reset 0x0000.0000															
			XN		AP					TEX			S	C	B
SRD										SIZE					ENABLE
MPUATTR3, type R/W, offset 0xDB8, reset 0x0000.0000															
			XN		AP					TEX			S	C	B
SRD										SIZE					ENABLE
System Control Base 0x400F.E000															
DID0, type RO, offset 0x000, reset - (see page 181)															
	VER							CLASS							
MAJOR								MINOR							
PBORCTL, type R/W, offset 0x030, reset 0x0000.7FFD (see page 183)															
														BORIOR	
LDOPCTL, type R/W, offset 0x034, reset 0x0000.0000 (see page 184)															
										VADJ					
RIS, type RO, offset 0x050, reset 0x0000.0000 (see page 185)															
							MOSCPUPRIS		PLLLRIS					BORRIS	
IMC, type R/W, offset 0x054, reset 0x0000.0000 (see page 186)															
							MOSCPUPIM		PLLLIM					BORIM	
MISC, type R/W1C, offset 0x058, reset 0x0000.0000 (see page 187)															
							MOSCPUPMIS		PLLLMIS					BORMIS	
RESC, type R/W, offset 0x05C, reset - (see page 188)															
															MOSCFAIL
											SW	WDT	BOR	POR	EXT

31	30	29	28	27	26	25	24	23	22	21	20	19	18	17	16
15	14	13	12	11	10	9	8	7	6	5	4	3	2	1	0
RCC, type R/W, offset 0x060, reset 0x078E.3AD1 (see page 189)															
				ACG	SYSDIV				USESYSDIV		USEPWMDIV	PWMDIV			
		PWRDN		BYPASS	XTAL					OSCSRC				IOSCDIS	MOSCDIS
PLLCFG, type RO, offset 0x064, reset - (see page 193)															
		F										R			
GPIOHBCTL, type R/W, offset 0x06C, reset 0x0000.0000 (see page 194)															
											PORTE	PORTD	PORTC	PORTB	PORTA
RCC2, type R/W, offset 0x070, reset 0x0780.6810 (see page 196)															
USERCC2			SYSDIV2												
		PWRDN2		BYPASS2					OSCSRC2						
MOSCCTL, type R/W, offset 0x07C, reset 0x0000.0000 (see page 198)															
															CVAL
DSLPCLKCFG, type R/W, offset 0x144, reset 0x0780.0000 (see page 199)															
			DSDIVORIDE												
									DSOSCSRC						
DID1, type RO, offset 0x004, reset - (see page 200)															
VER				FAM				PARTNO							
PINCOUNT								TEMP			PKG		ROHS	QUAL	
DC0, type RO, offset 0x008, reset 0x007F.003F (see page 202)															
SRAMSZ															
FLASHSZ															
DC1, type RO, offset 0x010, reset 0x0111.32BF (see page 203)															
							CAN0				PWM				ADC
MINSYSDIV						MAXADCSPD		MPU		TEMPSNS	PLL	WDT	SWO	SWD	JTAG
DC2, type RO, offset 0x014, reset 0x000F.0111 (see page 205)															
												TIMER3	TIMER2	TIMER1	TIMER0
							QEI0				SSI0				UART0
DC3, type RO, offset 0x018, reset 0x83FF.800F (see page 206)															
32KHZ						CCP1	CCP0	ADC7	ADC6	ADC5	ADC4	ADC3	ADC2	ADC1	ADC0
PWMFAULT												PWM3	PWM2	PWM1	PWM0
DC4, type RO, offset 0x01C, reset 0x0000.301F (see page 208)															
		UDMA	ROM								GPIOE	GPIOD	GPIOC	GPIOB	GPIOA
DC5, type RO, offset 0x020, reset 0x0330.000F (see page 209)															
						PWMFAULT1	PWMFAULT0			PWMEFLT	PWMESYNC				
												PWM3	PWM2	PWM1	PWM0
DC6, type RO, offset 0x024, reset 0x0000.0000 (see page 210)															
DC7, type RO, offset 0x028, reset 0x4000.0F00 (see page 211)															
	SW														
				SSI0_TX	SSI0_RX	UART0_TX	UART0_RX								
RCGC0, type R/W, offset 0x100, reset 0x00000040 (see page 212)															
							CAN0				PWM				ADC
						MAXADCSPD						WDT			
SCGC0, type R/W, offset 0x110, reset 0x00000040 (see page 214)															
							CAN0				PWM				ADC
						MAXADCSPD						WDT			

31	30	29	28	27	26	25	24	23	22	21	20	19	18	17	16
15	14	13	12	11	10	9	8	7	6	5	4	3	2	1	0
DCGC0, type R/W, offset 0x120, reset 0x00000040 (see page 216)															
							CAN0				PWM				ADC
												WDT			
RCGC1, type R/W, offset 0x104, reset 0x00000000 (see page 218)															
												TIMER3	TIMER2	TIMER1	TIMER0
							QEI0				SSI0				UART0
SCGC1, type R/W, offset 0x114, reset 0x00000000 (see page 220)															
												TIMER3	TIMER2	TIMER1	TIMER0
							QEI0				SSI0				UART0
DCGC1, type R/W, offset 0x124, reset 0x00000000 (see page 222)															
												TIMER3	TIMER2	TIMER1	TIMER0
							QEI0				SSI0				UART0
RCGC2, type R/W, offset 0x108, reset 0x00000000 (see page 224)															
		UDMA									GPIOE	GPIOD	GPIOC	GPIOB	GPIOA
SCGC2, type R/W, offset 0x118, reset 0x00000000 (see page 226)															
		UDMA									GPIOE	GPIOD	GPIOC	GPIOB	GPIOA
DCGC2, type R/W, offset 0x128, reset 0x00000000 (see page 228)															
		UDMA									GPIOE	GPIOD	GPIOC	GPIOB	GPIOA
SRCR0, type R/W, offset 0x040, reset 0x00000000 (see page 230)															
							CAN0				PWM				ADC
												WDT			
SRCR1, type R/W, offset 0x044, reset 0x00000000 (see page 231)															
												TIMER3	TIMER2	TIMER1	TIMER0
							QEI0				SSI0				UART0
SRCR2, type R/W, offset 0x048, reset 0x00000000 (see page 232)															
		UDMA									GPIOE	GPIOD	GPIOC	GPIOB	GPIOA
Internal Memory **ROM Registers (System Control Offset)** Base 0x400F.E000															
RMCTL, type R/W1C, offset 0x0F0, reset -															
															BA
Internal Memory **Flash Memory Control Registers (Flash Control Offset)** Base 0x400F.D000															
FMA, type R/W, offset 0x000, reset 0x0000.0000															
															OFFSET
OFFSET															
FMD, type R/W, offset 0x004, reset 0x0000.0000															
DATA															
DATA															
FMC, type R/W, offset 0x008, reset 0x0000.0000															
WRKEY															
												COMT	MERASE	ERASE	WRITE
FCRIS, type RO, offset 0x00C, reset 0x0000.0000															
														PRIS	ARIS

31	30	29	28	27	26	25	24	23	22	21	20	19	18	17	16
15	14	13	12	11	10	9	8	7	6	5	4	3	2	1	0
FCIM, type R/W, offset 0x010, reset 0x0000.0000															
														PMASK	AMASK
FCMISC, type R/W1C, offset 0x014, reset 0x0000.0000															
														PMISC	AMISC
Internal Memory **Flash Memory Protection Registers (System Control Offset)** Base 0x400F.E000															
USECRL, type R/W, offset 0x140, reset 0x31															
								USEC							
FMPRE0, type R/W, offset 0x130 and 0x200, reset 0xFFFF.FFFF															
READ_ENABLE															
READ_ENABLE															
FMPPE0, type R/W, offset 0x134 and 0x400, reset 0xFFFF.FFFF															
PROG_ENABLE															
PROG_ENABLE															
USER_DBG, type R/W, offset 0x1D0, reset 0xFFFF.FFFE															
NW	DATA														
DATA														DBG1	DBG0
USER_REG0, type R/W, offset 0x1E0, reset 0xFFFF.FFFF															
NW	DATA														
DATA															
USER_REG1, type R/W, offset 0x1E4, reset 0xFFFF.FFFF															
NW	DATA														
DATA															
USER_REG2, type R/W, offset 0x1E8, reset 0xFFFF.FFFF															
NW	DATA														
DATA															
USER_REG3, type R/W, offset 0x1EC, reset 0xFFFF.FFFF															
NW	DATA														
DATA															
FMPRE1, type R/W, offset 0x204, reset 0xFFFF.FFFF															
READ_ENABLE															
READ_ENABLE															
FMPRE2, type R/W, offset 0x208, reset 0x0000.0000															
READ_ENABLE															
READ_ENABLE															
FMPRE3, type R/W, offset 0x20C, reset 0x0000.0000															
READ_ENABLE															
READ_ENABLE															
FMPPE1, type R/W, offset 0x404, reset 0xFFFF.FFFF															
PROG_ENABLE															
PROG_ENABLE															
FMPPE2, type R/W, offset 0x408, reset 0x0000.0000															
PROG_ENABLE															
PROG_ENABLE															
FMPPE3, type R/W, offset 0x40C, reset 0x0000.0000															
PROG_ENABLE															
PROG_ENABLE															

31	30	29	28	27	26	25	24	23	22	21	20	19	18	17	16
15	14	13	12	11	10	9	8	7	6	5	4	3	2	1	0
Micro Direct Memory Access (µDMA) **µDMA Channel Control Structure** Base n/a															
DMASRCENDP, type R/W, offset 0x000, reset -															
ADDR															
ADDR															
DMADSTENDP, type R/W, offset 0x004, reset -															
ADDR															
ADDR															
DMACHCTL, type R/W, offset 0x008, reset -															
DSTINC	DSTSIZE			SRCINC		SRCSIZE								ARBSIZE	
ARBSIZE	XFERSIZE											NXTUSEBURST	XFERMODE		
Micro Direct Memory Access (µDMA) **µDMA Registers** Base 0x400F.F000															
DMASTAT, type RO, offset 0x000, reset 0x001F.0000															
											DMACHANS				
								STATE							MASTEN
DMACFG, type WO, offset 0x004, reset -															
															MASTEN
DMACTLBASE, type R/W, offset 0x008, reset 0x0000.0000															
ADDR															
ADDR															
DMAALTBASE, type RO, offset 0x00C, reset 0x0000.0200															
ADDR															
ADDR															
DMAWAITSTAT, type RO, offset 0x010, reset 0x0000.0000															
WAITREQ[n]															
WAITREQ[n]															
DMASWREQ, type WO, offset 0x014, reset -															
SWREQ[n]															
SWREQ[n]															
DMAUSEBURSTSET, type RO, offset 0x018, reset 0x0000.0000 (Reads)															
SET[n]															
SET[n]															
DMAUSEBURSTSET, type WO, offset 0x018, reset 0x0000.0000 (Writes)															
SET[n]															
SET[n]															
DMAUSEBURSTCLR, type WO, offset 0x01C, reset -															
CLR[n]															
CLR[n]															
DMAREQMASKSET, type RO, offset 0x020, reset 0x0000.0000 (Reads)															
SET[n]															
SET[n]															
DMAREQMASKSET, type WO, offset 0x020, reset 0x0000.0000 (Writes)															
SET[n]															
SET[n]															

31	30	29	28	27	26	25	24	23	22	21	20	19	18	17	16
15	14	13	12	11	10	9	8	7	6	5	4	3	2	1	0
DMAREQMASKCLR, type WO, offset 0x024, reset -															
CLR[n]															
CLR[n]															
DMAENASET, type RO, offset 0x028, reset 0x0000.0000 (Reads)															
SET[n]															
SET[n]															
DMAENASET, type WO, offset 0x028, reset 0x0000.0000 (Writes)															
SET[n]															
SET[n]															
DMAENACLR, type WO, offset 0x02C, reset -															
CLR[n]															
CLR[n]															
DMAALTSET, type RO, offset 0x030, reset 0x0000.0000 (Reads)															
SET[n]															
SET[n]															
DMAALTSET, type WO, offset 0x030, reset 0x0000.0000 (Writes)															
SET[n]															
SET[n]															
DMAALTCLR, type WO, offset 0x034, reset -															
CLR[n]															
CLR[n]															
DMAPRIOSET, type RO, offset 0x038, reset 0x0000.0000 (Reads)															
SET[n]															
SET[n]															
DMAPRIOSET, type WO, offset 0x038, reset 0x0000.0000 (Writes)															
SET[n]															
SET[n]															
DMAPRIOCLR, type WO, offset 0x03C, reset -															
CLR[n]															
CLR[n]															
DMAERRCLR, type RO, offset 0x04C, reset 0x0000.0000 (Reads)															
															ERRCLR
DMAERRCLR, type WO, offset 0x04C, reset 0x0000.0000 (Writes)															
															ERRCLR
DMAPeriphID0, type RO, offset 0xFE0, reset 0x0000.0030															
								PID0							
DMAPeriphID1, type RO, offset 0xFE4, reset 0x0000.00B2															
								PID1							
DMAPeriphID2, type RO, offset 0xFE8, reset 0x0000.000B															
								PID2							
DMAPeriphID3, type RO, offset 0xFEC, reset 0x0000.0000															
								PID3							
DMAPeriphID4, type RO, offset 0xFD0, reset 0x0000.0004															
								PID4							

31	30	29	28	27	26	25	24	23	22	21	20	19	18	17	16
15	14	13	12	11	10	9	8	7	6	5	4	3	2	1	0
DMAPCellID0, type RO, offset 0xFF0, reset 0x0000.000D															
								CID0							
DMAPCellID1, type RO, offset 0xFF4, reset 0x0000.00F0															
								CID1							
DMAPCellID2, type RO, offset 0xFF8, reset 0x0000.0005															
								CID2							
DMAPCellID3, type RO, offset 0xFFC, reset 0x0000.00B1															
								CID3							
General-Purpose Input/Outputs (GPIOs) GPIO Port A (APB) base: 0x4000.4000 GPIO Port A (AHB) base: 0x4005.8000 GPIO Port B (APB) base: 0x4000.5000 GPIO Port B (AHB) base: 0x4005.9000 GPIO Port C (APB) base: 0x4000.6000 GPIO Port C (AHB) base: 0x4005.A000 GPIO Port D (APB) base: 0x4000.7000 GPIO Port D (AHB) base: 0x4005.B000 GPIO Port E (APB) base: 0x4002.4000 GPIO Port E (AHB) base: 0x4005.C000															
GPIODATA, type R/W, offset 0x000, reset 0x0000.0000 (see page 335)															
								DATA							
GPIODIR, type R/W, offset 0x400, reset 0x0000.0000 (see page 336)															
								DIR							
GPIOIS, type R/W, offset 0x404, reset 0x0000.0000 (see page 337)															
								IS							
GPIOIBE, type R/W, offset 0x408, reset 0x0000.0000 (see page 338)															
								IBE							
GPIOIEV, type R/W, offset 0x40C, reset 0x0000.0000 (see page 339)															
								IEV							
GPIOIM, type R/W, offset 0x410, reset 0x0000.0000 (see page 340)															
								IME							
GPIORIS, type RO, offset 0x414, reset 0x0000.0000 (see page 341)															
								RIS							
GPIOMIS, type RO, offset 0x418, reset 0x0000.0000 (see page 342)															
								MIS							
GPIOICR, type W1C, offset 0x41C, reset 0x0000.0000 (see page 343)															
								IC							
GPIOAFSEL, type R/W, offset 0x420, reset - (see page 344)															
								AFSEL							
GPIODR2R, type R/W, offset 0x500, reset 0x0000.00FF (see page 346)															
								DRV2							

31	30	29	28	27	26	25	24	23	22	21	20	19	18	17	16
15	14	13	12	11	10	9	8	7	6	5	4	3	2	1	0
GPIODR4R, type R/W, offset 0x504, reset 0x0000.0000 (see page 347)															
								DRV4							
GPIODR8R, type R/W, offset 0x508, reset 0x0000.0000 (see page 348)															
								DRV8							
GPIOODR, type R/W, offset 0x50C, reset 0x0000.0000 (see page 349)															
								ODE							
GPIOPUR, type R/W, offset 0x510, reset - (see page 350)															
								PUE							
GPIOPDR, type R/W, offset 0x514, reset 0x0000.0000 (see page 352)															
								PDE							
GPIOSLR, type R/W, offset 0x518, reset 0x0000.0000 (see page 353)															
								SRL							
GPIODEN, type R/W, offset 0x51C, reset - (see page 354)															
								DEN							
GPIOLOCK, type R/W, offset 0x520, reset 0x0000.0001 (see page 356)															
LOCK															
LOCK															
GPIOCR, type -, offset 0x524, reset - (see page 357)															
								CR							
GPIOAMSEL, type R/W, offset 0x528, reset 0x0000.0000 (see page 359)															
												GPIOAMSEL			
GPIOPeriphID4, type RO, offset 0xFD0, reset 0x0000.0000 (see page 360)															
								PID4							
GPIOPeriphID5, type RO, offset 0xFD4, reset 0x0000.0000 (see page 361)															
								PID5							
GPIOPeriphID6, type RO, offset 0xFD8, reset 0x0000.0000 (see page 362)															
								PID6							
GPIOPeriphID7, type RO, offset 0xFDC, reset 0x0000.0000 (see page 363)															
								PID7							
GPIOPeriphID0, type RO, offset 0xFE0, reset 0x0000.0061 (see page 364)															
								PID0							
GPIOPeriphID1, type RO, offset 0xFE4, reset 0x0000.0000 (see page 365)															
								PID1							
GPIOPeriphID2, type RO, offset 0xFE8, reset 0x0000.0018 (see page 366)															
								PID2							

31	30	29	28	27	26	25	24	23	22	21	20	19	18	17	16
15	14	13	12	11	10	9	8	7	6	5	4	3	2	1	0
GPIOPeriphID3, type RO, offset 0xFEC, reset 0x0000.0001 (see page 367)															
								PID3							
GPIOPCellID0, type RO, offset 0xFF0, reset 0x0000.000D (see page 368)															
								CID0							
GPIOPCellID1, type RO, offset 0xFF4, reset 0x0000.00F0 (see page 369)															
								CID1							
GPIOPCellID2, type RO, offset 0xFF8, reset 0x0000.0005 (see page 370)															
								CID2							
GPIOPCellID3, type RO, offset 0xFFC, reset 0x0000.00B1 (see page 371)															
								CID3							
General-Purpose Timers Timer0 base: 0x4003.0000 Timer1 base: 0x4003.1000 Timer2 base: 0x4003.2000 Timer3 base: 0x4003.3000															
GPTMCFG, type R/W, offset 0x000, reset 0x0000.0000 (see page 384)															
													GPTMCFG		
GPTMTAMR, type R/W, offset 0x004, reset 0x0000.0000 (see page 385)															
												TAAMS	TACMR	TAMR	
GPTMTBMR, type R/W, offset 0x008, reset 0x0000.0000 (see page 387)															
												TBAMS	TBCMR	TBMR	
GPTMCTL, type R/W, offset 0x00C, reset 0x0000.0000 (see page 389)															
	TBPWML	TBOTE		TBEVENT		TBSTALL	TBEN		TAPWML	TAOTE	RTCEN	TAEVENT		TASTALL	TAEN
GPTMIMR, type R/W, offset 0x018, reset 0x0000.0000 (see page 392)															
					CBEIM	CBMIM	TBTOIM					RTCIM	CAEIM	CAMIM	TATOIM
GPTMRIS, type RO, offset 0x01C, reset 0x0000.0000 (see page 394)															
					CBERIS	CBMRIS	TBTORIS					RTCRIS	CAERIS	CAMRIS	TATORIS
GPTMMIS, type RO, offset 0x020, reset 0x0000.0000 (see page 395)															
					CBEMIS	CBMMIS	TBTOMIS					RTCMIS	CAEMIS	CAMMIS	TATOMIS
GPTMICR, type W1C, offset 0x024, reset 0x0000.0000 (see page 396)															
					CBECINT	CBMCINT	TBTOCINT					RTCCINT	CAECINT	CAMCINT	TATOCINT
GPTMTAILR, type R/W, offset 0x028, reset 0xFFFF.FFFF (see page 398)															
TAILRH															
TAILRL															
GPTMTBILR, type R/W, offset 0x02C, reset 0x0000.FFFF (see page 399)															
TBILRL															
GPTMTAMATCHR, type R/W, offset 0x030, reset 0xFFFF.FFFF (see page 400)															
TAMRH															
TAMRL															

31	30	29	28	27	26	25	24	23	22	21	20	19	18	17	16
15	14	13	12	11	10	9	8	7	6	5	4	3	2	1	0
GPTMTBMATCHR, type R/W, offset 0x034, reset 0x0000.FFFF (see page 401)															
TBMRL															
GPTMTAPR, type R/W, offset 0x038, reset 0x0000.0000 (see page 402)															
								TAPSR							
GPTMTBPR, type R/W, offset 0x03C, reset 0x0000.0000 (see page 403)															
								TBPSR							
GPTMTAR, type RO, offset 0x048, reset 0xFFFF.FFFF (see page 404)															
TARH															
TARL															
GPTMTBR, type RO, offset 0x04C, reset 0x0000.FFFF (see page 405)															
TBRL															
Watchdog Timer Base 0x4000.0000															
WDTLOAD, type R/W, offset 0x000, reset 0xFFFF.FFFF (see page 410)															
WDTLoad															
WDTLoad															
WDTVALUE, type RO, offset 0x004, reset 0xFFFF.FFFF (see page 411)															
WDTValue															
WDTValue															
WDTCTL, type R/W, offset 0x008, reset 0x0000.0000 (see page 412)															
														RESEN	INTEN
WDTICR, type WO, offset 0x00C, reset - (see page 413)															
WDTIntClr															
WDTIntClr															
WDTRIS, type RO, offset 0x010, reset 0x0000.0000 (see page 414)															
															WDTRIS
WDTMIS, type RO, offset 0x014, reset 0x0000.0000 (see page 415)															
															WDTMIS
WDTTEST, type R/W, offset 0x418, reset 0x0000.0000 (see page 416)															
							STALL								
WDTLOCK, type R/W, offset 0xC00, reset 0x0000.0000 (see page 417)															
WDTLock															
WDTLock															
WDTPeriphID4, type RO, offset 0xFD0, reset 0x0000.0000 (see page 418)															
								PID4							
WDTPeriphID5, type RO, offset 0xFD4, reset 0x0000.0000 (see page 419)															
								PID5							
WDTPeriphID6, type RO, offset 0xFD8, reset 0x0000.0000 (see page 420)															
								PID6							
WDTPeriphID7, type RO, offset 0xFDC, reset 0x0000.0000 (see page 421)															
								PID7							

31	30	29	28	27	26	25	24	23	22	21	20	19	18	17	16
15	14	13	12	11	10	9	8	7	6	5	4	3	2	1	0
WDTPeriphID0, type RO, offset 0xFE0, reset 0x0000.0005 (see page 422)															
								PID0							
WDTPeriphID1, type RO, offset 0xFE4, reset 0x0000.0018 (see page 423)															
								PID1							
WDTPeriphID2, type RO, offset 0xFE8, reset 0x0000.0018 (see page 424)															
								PID2							
WDTPeriphID3, type RO, offset 0xFEC, reset 0x0000.0001 (see page 425)															
								PID3							
WDTPCellID0, type RO, offset 0xFF0, reset 0x0000.000D (see page 426)															
								CID0							
WDTPCellID1, type RO, offset 0xFF4, reset 0x0000.00F0 (see page 427)															
								CID1							
WDTPCellID2, type RO, offset 0xFF8, reset 0x0000.0005 (see page 428)															
								CID2							
WDTPCellID3, type RO, offset 0xFFC, reset 0x0000.00B1 (see page 429)															
								CID3							
Analog-to-Digital Converter (ADC) Base 0x4003.8000															
ADCACTSS, type R/W, offset 0x000, reset 0x0000.0000 (see page 440)															
												ASEN3	ASEN2	ASEN1	ASEN0
ADCRIS, type RO, offset 0x004, reset 0x0000.0000 (see page 441)															
												INR3	INR2	INR1	INR0
ADCIM, type R/W, offset 0x008, reset 0x0000.0000 (see page 442)															
												MASK3	MASK2	MASK1	MASK0
ADCISC, type R/W1C, offset 0x00C, reset 0x0000.0000 (see page 443)															
												IN3	IN2	IN1	IN0
ADCOSTAT, type R/W1C, offset 0x010, reset 0x0000.0000 (see page 444)															
												OV3	OV2	OV1	OV0
ADCEMUX, type R/W, offset 0x014, reset 0x0000.0000 (see page 445)															
EM3				EM2				EM1				EM0			
ADCUSTAT, type R/W1C, offset 0x018, reset 0x0000.0000 (see page 449)															
												UV3	UV2	UV1	UV0
ADCSSPRI, type R/W, offset 0x020, reset 0x0000.3210 (see page 450)															
		SS3				SS2				SS1				SS0	
ADCPSSI, type WO, offset 0x028, reset - (see page 452)															
												SS3	SS2	SS1	SS0

31	30	29	28	27	26	25	24	23	22	21	20	19	18	17	16
15	14	13	12	11	10	9	8	7	6	5	4	3	2	1	0
ADCSAC, type R/W, offset 0x030, reset 0x0000.0000 (see page 453)															
													AVG		
ADCSSMUX0, type R/W, offset 0x040, reset 0x0000.0000 (see page 454)															
	MUX7				MUX6				MUX5				MUX4		
	MUX3				MUX2				MUX1				MUX0		
ADCSSCTL0, type R/W, offset 0x044, reset 0x0000.0000 (see page 456)															
TS7	IE7	END7	D7	TS6	IE6	END6	D6	TS5	IE5	END5	D5	TS4	IE4	END4	D4
TS3	IE3	END3	D3	TS2	IE2	END2	D2	TS1	IE1	END1	D1	TS0	IE0	END0	D0
ADCSSFIFO0, type RO, offset 0x048, reset - (see page 459)															
						DATA									
ADCSSFIFO1, type RO, offset 0x068, reset - (see page 459)															
						DATA									
ADCSSFIFO2, type RO, offset 0x088, reset - (see page 459)															
						DATA									
ADCSSFIFO3, type RO, offset 0x0A8, reset - (see page 459)															
						DATA									
ADCSSFSTAT0, type RO, offset 0x04C, reset 0x0000.0100 (see page 460)															
			FULL				EMPTY	HPTR				TPTR			
ADCSSFSTAT1, type RO, offset 0x06C, reset 0x0000.0100 (see page 460)															
			FULL				EMPTY	HPTR				TPTR			
ADCSSFSTAT2, type RO, offset 0x08C, reset 0x0000.0100 (see page 460)															
			FULL				EMPTY	HPTR				TPTR			
ADCSSFSTAT3, type RO, offset 0x0AC, reset 0x0000.0100 (see page 460)															
			FULL				EMPTY	HPTR				TPTR			
ADCSSMUX1, type R/W, offset 0x060, reset 0x0000.0000 (see page 461)															
	MUX3				MUX2				MUX1				MUX0		
ADCSSMUX2, type R/W, offset 0x080, reset 0x0000.0000 (see page 461)															
	MUX3				MUX2				MUX1				MUX0		
ADCSSCTL1, type R/W, offset 0x064, reset 0x0000.0000 (see page 462)															
TS3	IE3	END3	D3	TS2	IE2	END2	D2	TS1	IE1	END1	D1	TS0	IE0	END0	D0
ADCSSCTL2, type R/W, offset 0x084, reset 0x0000.0000 (see page 462)															
TS3	IE3	END3	D3	TS2	IE2	END2	D2	TS1	IE1	END1	D1	TS0	IE0	END0	D0
ADCSSMUX3, type R/W, offset 0x0A0, reset 0x0000.0000 (see page 464)															
													MUX0		
ADCSSCTL3, type R/W, offset 0x0A4, reset 0x0000.0002 (see page 465)															
												TS0	IE0	END0	D0

31	30	29	28	27	26	25	24	23	22	21	20	19	18	17	16
15	14	13	12	11	10	9	8	7	6	5	4	3	2	1	0
Universal Asynchronous Receivers/Transmitters (UARTs) UART0 base: 0x4000.C000															
UARTDR, type R/W, offset 0x000, reset 0x0000.0000 (see page 475)															
				OE	BE	PE	FE	DATA							
UARTRSR/UARTECR, type RO, offset 0x004, reset 0x0000.0000 (Reads) (see page 477)															
												OE	BE	PE	FE
UARTRSR/UARTECR, type WO, offset 0x004, reset 0x0000.0000 (Writes) (see page 477)															
								DATA							
UARTFR, type RO, offset 0x018, reset 0x0000.0090 (see page 479)															
								TXFE	RXFF	TXFF	RXFE	BUSY			
UARTILPR, type R/W, offset 0x020, reset 0x0000.0000 (see page 481)															
								ILPDVSR							
UARTIBRD, type R/W, offset 0x024, reset 0x0000.0000 (see page 482)															
DIVINT															
UARTFBRD, type R/W, offset 0x028, reset 0x0000.0000 (see page 483)															
										DIVFRAC					
UARTLCRH, type R/W, offset 0x02C, reset 0x0000.0000 (see page 484)															
								SPS	WLEN		FEN	STP2	EPS	PEN	BRK
UARTCTL, type R/W, offset 0x030, reset 0x0000.0300 (see page 486)															
						RXE	TXE	LBE					SIRLP	SIREN	UARTEN
UARTIFLS, type R/W, offset 0x034, reset 0x0000.0012 (see page 488)															
										RXIFLSEL			TXIFLSEL		
UARTIM, type R/W, offset 0x038, reset 0x0000.0000 (see page 490)															
					OEIM	BEIM	PEIM	FEIM	RTIM	TXIM	RXIM				
UARTRIS, type RO, offset 0x03C, reset 0x0000.0000 (see page 492)															
					OERIS	BERIS	PERIS	FERIS	RTRIS	TXRIS	RXRIS				
UARTMIS, type RO, offset 0x040, reset 0x0000.0000 (see page 493)															
					OEMIS	BEMIS	PEMIS	FEMIS	RTMIS	TXMIS	RXMIS				
UARTICR, type W1C, offset 0x044, reset 0x0000.0000 (see page 494)															
					OEIC	BEIC	PEIC	FEIC	RTIC	TXIC	RXIC				
UARTDMACTL, type R/W, offset 0x048, reset 0x0000.0000 (see page 496)															
													DMAERR	TXDMAE	RXDMAE
UARTPeriphID4, type RO, offset 0xFD0, reset 0x0000.0000 (see page 497)															
								PID4							
UARTPeriphID5, type RO, offset 0xFD4, reset 0x0000.0000 (see page 498)															
								PID5							

31	30	29	28	27	26	25	24	23	22	21	20	19	18	17	16
15	14	13	12	11	10	9	8	7	6	5	4	3	2	1	0
UARTPeriphID6, type RO, offset 0xFD8, reset 0x0000.0000 (see page 499)															
								PID6							
UARTPeriphID7, type RO, offset 0xFDC, reset 0x0000.0000 (see page 500)															
								PID7							
UARTPeriphID0, type RO, offset 0xFE0, reset 0x0000.0011 (see page 501)															
								PID0							
UARTPeriphID1, type RO, offset 0xFE4, reset 0x0000.0000 (see page 502)															
								PID1							
UARTPeriphID2, type RO, offset 0xFE8, reset 0x0000.0018 (see page 503)															
								PID2							
UARTPeriphID3, type RO, offset 0xFEC, reset 0x0000.0001 (see page 504)															
								PID3							
UARTPCellID0, type RO, offset 0xFF0, reset 0x0000.000D (see page 505)															
								CID0							
UARTPCellID1, type RO, offset 0xFF4, reset 0x0000.00F0 (see page 506)															
								CID1							
UARTPCellID2, type RO, offset 0xFF8, reset 0x0000.0005 (see page 507)															
								CID2							
UARTPCellID3, type RO, offset 0xFFC, reset 0x0000.00B1 (see page 508)															
								CID3							
Synchronous Serial Interface (SSI) SSI0 base: 0x4000.8000															
SSICR0, type R/W, offset 0x000, reset 0x0000.0000 (see page 523)															
SCR								SPH	SPO	FRF		DSS			
SSICR1, type R/W, offset 0x004, reset 0x0000.0000 (see page 525)															
												SOD	MS	SSE	LBM
SSIDR, type R/W, offset 0x008, reset 0x0000.0000 (see page 527)															
DATA															
SSISR, type RO, offset 0x00C, reset 0x0000.0003 (see page 528)															
											BSY	RFF	RNE	TNF	TFE
SSICPSR, type R/W, offset 0x010, reset 0x0000.0000 (see page 530)															
								CPSDVSR							
SSIIM, type R/W, offset 0x014, reset 0x0000.0000 (see page 531)															
												TXIM	RXIM	RTIM	RORIM
SSIRIS, type RO, offset 0x018, reset 0x0000.0008 (see page 533)															
												TXRIS	RXRIS	RTRIS	RORRIS

31	30	29	28	27	26	25	24	23	22	21	20	19	18	17	16
15	14	13	12	11	10	9	8	7	6	5	4	3	2	1	0
SSIMIS, type RO, offset 0x01C, reset 0x0000.0000 (see page 534)															
												TXMIS	RXMIS	RTMIS	RORMIS
SSIICR, type W1C, offset 0x020, reset 0x0000.0000 (see page 535)															
														RTIC	RORIC
SSIDMACTL, type R/W, offset 0x024, reset 0x0000.0000 (see page 536)															
														TXDMAE	RXDMAE
SSIPeriphID4, type RO, offset 0xFD0, reset 0x0000.0000 (see page 537)															
								PID4							
SSIPeriphID5, type RO, offset 0xFD4, reset 0x0000.0000 (see page 538)															
								PID5							
SSIPeriphID6, type RO, offset 0xFD8, reset 0x0000.0000 (see page 539)															
								PID6							
SSIPeriphID7, type RO, offset 0xFDC, reset 0x0000.0000 (see page 540)															
								PID7							
SSIPeriphID0, type RO, offset 0xFE0, reset 0x0000.0022 (see page 541)															
								PID0							
SSIPeriphID1, type RO, offset 0xFE4, reset 0x0000.0000 (see page 542)															
								PID1							
SSIPeriphID2, type RO, offset 0xFE8, reset 0x0000.0018 (see page 543)															
								PID2							
SSIPeriphID3, type RO, offset 0xFEC, reset 0x0000.0001 (see page 544)															
								PID3							
SSIPCellID0, type RO, offset 0xFF0, reset 0x0000.000D (see page 545)															
								CID0							
SSIPCellID1, type RO, offset 0xFF4, reset 0x0000.00F0 (see page 546)															
								CID1							
SSIPCellID2, type RO, offset 0xFF8, reset 0x0000.0005 (see page 547)															
								CID2							
SSIPCellID3, type RO, offset 0xFFC, reset 0x0000.00B1 (see page 548)															
								CID3							
Controller Area Network (CAN) Module CAN0 base: 0x4004.0000															
CANCTL, type R/W, offset 0x000, reset 0x0000.0001 (see page 570)															
								TEST	CCE	DAR		EIE	SIE	IE	INIT
CANSTS, type R/W, offset 0x004, reset 0x0000.0000 (see page 572)															
								BOFF	EWARN	EPASS	RXOK	TXOK	LEC		

31	30	29	28	27	26	25	24	23	22	21	20	19	18	17	16
15	14	13	12	11	10	9	8	7	6	5	4	3	2	1	0
CANERR, type RO, offset 0x008, reset 0x0000.0000 (see page 574)															
RP	REC							TEC							
CANBIT, type R/W, offset 0x00C, reset 0x0000.2301 (see page 575)															
	TSEG2			TSEG1				SJW		BRP					
CANINT, type RO, offset 0x010, reset 0x0000.0000 (see page 576)															
INTID															
CANTST, type R/W, offset 0x014, reset 0x0000.0000 (see page 577)															
								RX	TX		LBACK	SILENT	BASIC		
CANBRPE, type R/W, offset 0x018, reset 0x0000.0000 (see page 579)															
												BRPE			
CANIF1CRQ, type R/W, offset 0x020, reset 0x0000.0001 (see page 580)															
BUSY										MNUM					
CANIF2CRQ, type R/W, offset 0x080, reset 0x0000.0001 (see page 580)															
BUSY										MNUM					
CANIF1CMSK, type R/W, offset 0x024, reset 0x0000.0000 (see page 581)															
								WRNRD	MASK	ARB	CONTROL	CLRINTPND	NEWDAT / TXRQST	DATAA	DATAB
CANIF2CMSK, type R/W, offset 0x084, reset 0x0000.0000 (see page 581)															
								WRNRD	MASK	ARB	CONTROL	CLRINTPND	NEWDAT / TXRQST	DATAA	DATAB
CANIF1MSK1, type R/W, offset 0x028, reset 0x0000.FFFF (see page 583)															
MSK															
CANIF2MSK1, type R/W, offset 0x088, reset 0x0000.FFFF (see page 583)															
MSK															
CANIF1MSK2, type R/W, offset 0x02C, reset 0x0000.FFFF (see page 584)															
MXTD	MDIR		MSK												
CANIF2MSK2, type R/W, offset 0x08C, reset 0x0000.FFFF (see page 584)															
MXTD	MDIR		MSK												
CANIF1ARB1, type R/W, offset 0x030, reset 0x0000.0000 (see page 585)															
ID															
CANIF2ARB1, type R/W, offset 0x090, reset 0x0000.0000 (see page 585)															
ID															

31	30	29	28	27	26	25	24	23	22	21	20	19	18	17	16
15	14	13	12	11	10	9	8	7	6	5	4	3	2	1	0
CANIF1ARB2, type R/W, offset 0x034, reset 0x0000.0000 (see page 586)															
MSGVAL	XTD	DIR	ID												
CANIF2ARB2, type R/W, offset 0x094, reset 0x0000.0000 (see page 586)															
MSGVAL	XTD	DIR	ID												
CANIF1MCTL, type R/W, offset 0x038, reset 0x0000.0000 (see page 588)															
NEWDAT	MSGLST	INTPND	UMASK	TXIE	RXIE	RMTEN	TXRQST	EOB				DLC			
CANIF2MCTL, type R/W, offset 0x098, reset 0x0000.0000 (see page 588)															
NEWDAT	MSGLST	INTPND	UMASK	TXIE	RXIE	RMTEN	TXRQST	EOB				DLC			
CANIF1DA1, type R/W, offset 0x03C, reset 0x0000.0000 (see page 590)															
DATA															
CANIF1DA2, type R/W, offset 0x040, reset 0x0000.0000 (see page 590)															
DATA															
CANIF1DB1, type R/W, offset 0x044, reset 0x0000.0000 (see page 590)															
DATA															
CANIF1DB2, type R/W, offset 0x048, reset 0x0000.0000 (see page 590)															
DATA															
CANIF2DA1, type R/W, offset 0x09C, reset 0x0000.0000 (see page 590)															
DATA															
CANIF2DA2, type R/W, offset 0x0A0, reset 0x0000.0000 (see page 590)															
DATA															
CANIF2DB1, type R/W, offset 0x0A4, reset 0x0000.0000 (see page 590)															
DATA															
CANIF2DB2, type R/W, offset 0x0A8, reset 0x0000.0000 (see page 590)															
DATA															
CANTXRQ1, type RO, offset 0x100, reset 0x0000.0000 (see page 591)															
TXRQST															
CANTXRQ2, type RO, offset 0x104, reset 0x0000.0000 (see page 591)															
TXRQST															
CANNWDA1, type RO, offset 0x120, reset 0x0000.0000 (see page 592)															
NEWDAT															
CANNWDA2, type RO, offset 0x124, reset 0x0000.0000 (see page 592)															
NEWDAT															
CANMSG1INT, type RO, offset 0x140, reset 0x0000.0000 (see page 593)															
INTPND															

31	30	29	28	27	26	25	24	23	22	21	20	19	18	17	16
15	14	13	12	11	10	9	8	7	6	5	4	3	2	1	0
CANMSG2INT, type RO, offset 0x144, reset 0x0000.0000 (see page 593)															
INTPND															
CANMSG1VAL, type RO, offset 0x160, reset 0x0000.0000 (see page 594)															
MSGVAL															
CANMSG2VAL, type RO, offset 0x164, reset 0x0000.0000 (see page 594)															
MSGVAL															
Pulse Width Modulator (PWM) Base 0x4002.8000															
PWMCTL, type R/W, offset 0x000, reset 0x0000.0000 (see page 606)															
														GlobalSync1	GlobalSync0
PWMSYNC, type R/W, offset 0x004, reset 0x0000.0000 (see page 607)															
														Sync1	Sync0
PWMENABLE, type R/W, offset 0x008, reset 0x0000.0000 (see page 608)															
												PWM3En	PWM2En	PWM1En	PWM0En
PWMINVERT, type R/W, offset 0x00C, reset 0x0000.0000 (see page 609)															
												PWM3Inv	PWM2Inv	PWM1Inv	PWM0Inv
PWMFAULT, type R/W, offset 0x010, reset 0x0000.0000 (see page 610)															
												Fault3	Fault2	Fault1	Fault0
PWMINTEN, type R/W, offset 0x014, reset 0x0000.0000 (see page 611)															
														IntFault1	IntFault0
														IntPWM1	IntPWM0
PWMRIS, type RO, offset 0x018, reset 0x0000.0000 (see page 612)															
														IntFault1	IntFault0
														IntPWM1	IntPWM0
PWMISC, type R/W1C, offset 0x01C, reset 0x0000.0000 (see page 613)															
														IntFault1	IntFault0
														IntPWM1	IntPWM0
PWMSTATUS, type RO, offset 0x020, reset 0x0000.0000 (see page 614)															
														Fault1	Fault0
PWMFAULTVAL, type R/W, offset 0x024, reset 0x0000.0000 (see page 615)															
												PWM3	PWM2	PWM1	PWM0
PWM0CTL, type R/W, offset 0x040, reset 0x0000.0000 (see page 616)															
													LATCH	MINFLTPER	FLTSRC
DBFallUpd		DBRiseUpd		DBCtlUpd		GenBUpd		GenAUpd		CmpBUpd	CmpAUpd	LoadUpd	Debug	Mode	Enable
PWM1CTL, type R/W, offset 0x080, reset 0x0000.0000 (see page 616)															
													LATCH	MINFLTPER	FLTSRC
DBFallUpd		DBRiseUpd		DBCtlUpd		GenBUpd		GenAUpd		CmpBUpd	CmpAUpd	LoadUpd	Debug	Mode	Enable
PWM0INTEN, type R/W, offset 0x044, reset 0x0000.0000 (see page 621)															
		TrCmpBD	TrCmpBU	TrCmpAD	TrCmpAU	TrCntLoad	TrCntZero			IntCmpBD	IntCmpBU	IntCmpAD	IntCmpAU	IntCntLoad	IntCntZero

31	30	29	28	27	26	25	24	23	22	21	20	19	18	17	16
15	14	13	12	11	10	9	8	7	6	5	4	3	2	1	0
PWM1INTEN, type R/W, offset 0x084, reset 0x0000.0000 (see page 621)															
		TrCmpBD	TrCmpBU	TrCmpAD	TrCmpAU	TrCntLoad	TrCntZero			IntCmpBD	IntCmpBU	IntCmpAD	IntCmpAU	IntCntLoad	IntCntZero
PWM0RIS, type RO, offset 0x048, reset 0x0000.0000 (see page 624)															
										IntCmpBD	IntCmpBU	IntCmpAD	IntCmpAU	IntCntLoad	IntCntZero
PWM1RIS, type RO, offset 0x088, reset 0x0000.0000 (see page 624)															
										IntCmpBD	IntCmpBU	IntCmpAD	IntCmpAU	IntCntLoad	IntCntZero
PWM0ISC, type R/W1C, offset 0x04C, reset 0x0000.0000 (see page 625)															
										IntCmpBD	IntCmpBU	IntCmpAD	IntCmpAU	IntCntLoad	IntCntZero
PWM1ISC, type R/W1C, offset 0x08C, reset 0x0000.0000 (see page 625)															
										IntCmpBD	IntCmpBU	IntCmpAD	IntCmpAU	IntCntLoad	IntCntZero
PWM0LOAD, type R/W, offset 0x050, reset 0x0000.0000 (see page 626)															
Load															
PWM1LOAD, type R/W, offset 0x090, reset 0x0000.0000 (see page 626)															
Load															
PWM0COUNT, type RO, offset 0x054, reset 0x0000.0000 (see page 627)															
Count															
PWM1COUNT, type RO, offset 0x094, reset 0x0000.0000 (see page 627)															
Count															
PWM0CMPA, type R/W, offset 0x058, reset 0x0000.0000 (see page 628)															
CompA															
PWM1CMPA, type R/W, offset 0x098, reset 0x0000.0000 (see page 628)															
CompA															
PWM0CMPB, type R/W, offset 0x05C, reset 0x0000.0000 (see page 629)															
CompB															
PWM1CMPB, type R/W, offset 0x09C, reset 0x0000.0000 (see page 629)															
CompB															
PWM0GENA, type R/W, offset 0x060, reset 0x0000.0000 (see page 630)															
				ActCmpBD		ActCmpBU		ActCmpAD		ActCmpAU		ActLoad		ActZero	
PWM1GENA, type R/W, offset 0x0A0, reset 0x0000.0000 (see page 630)															
				ActCmpBD		ActCmpBU		ActCmpAD		ActCmpAU		ActLoad		ActZero	
PWM0GENB, type R/W, offset 0x064, reset 0x0000.0000 (see page 633)															
				ActCmpBD		ActCmpBU		ActCmpAD		ActCmpAU		ActLoad		ActZero	
PWM1GENB, type R/W, offset 0x0A4, reset 0x0000.0000 (see page 633)															
				ActCmpBD		ActCmpBU		ActCmpAD		ActCmpAU		ActLoad		ActZero	

31	30	29	28	27	26	25	24	23	22	21	20	19	18	17	16
15	14	13	12	11	10	9	8	7	6	5	4	3	2	1	0
PWM0DBCTL, type R/W, offset 0x068, reset 0x0000.0000 (see page 636)															
															Enable
PWM1DBCTL, type R/W, offset 0x0A8, reset 0x0000.0000 (see page 636)															
															Enable
PWM0DBRISE, type R/W, offset 0x06C, reset 0x0000.0000 (see page 637)															
				RiseDelay											
PWM1DBRISE, type R/W, offset 0x0AC, reset 0x0000.0000 (see page 637)															
				RiseDelay											
PWM0DBFALL, type R/W, offset 0x070, reset 0x0000.0000 (see page 638)															
				FallDelay											
PWM1DBFALL, type R/W, offset 0x0B0, reset 0x0000.0000 (see page 638)															
				FallDelay											
PWM0FLTSRC0, type R/W, offset 0x074, reset 0x0000.0000 (see page 639)															
														FAULT1	FAULT0
PWM1FLTSRC0, type R/W, offset 0x0B4, reset 0x0000.0000 (see page 639)															
														FAULT1	FAULT0
PWM0MINFLTPER, type R/W, offset 0x07C, reset 0x0000.0000 (see page 640)															
MFP															
PWM1MINFLTPER, type R/W, offset 0x0BC, reset 0x0000.0000 (see page 640)															
MFP															
PWM0FLTSEN, type R/W, offset 0x800, reset 0x0000.0000 (see page 641)															
														FAULT1	FAULT0
PWM1FLTSEN, type R/W, offset 0x880, reset 0x0000.0000 (see page 641)															
														FAULT1	FAULT0
PWM0FLTSTAT0, type -, offset 0x804, reset 0x0000.0000 (see page 642)															
														FAULT1	FAULT0
PWM1FLTSTAT0, type -, offset 0x884, reset 0x0000.0000 (see page 642)															
														FAULT1	FAULT0
Quadrature Encoder Interface (QEI) QEI0 base: 0x4002.C000															
QEICTL, type R/W, offset 0x000, reset 0x0000.0000 (see page 649)															
			STALLEN	INVI	INVB	INVA	VelDiv			VelEn	ResMode	CapMode	SigMode	Swap	Enable
QEISTAT, type RO, offset 0x004, reset 0x0000.0000 (see page 651)															
														Direction	Error
QEIPOS, type R/W, offset 0x008, reset 0x0000.0000 (see page 652)															
Position															
Position															

31	30	29	28	27	26	25	24	23	22	21	20	19	18	17	16
15	14	13	12	11	10	9	8	7	6	5	4	3	2	1	0
QEIMAXPOS, type R/W, offset 0x00C, reset 0x0000.0000 (see page 653)															
MaxPos															
MaxPos															
QEILOAD, type R/W, offset 0x010, reset 0x0000.0000 (see page 654)															
Load															
Load															
QEITIME, type RO, offset 0x014, reset 0x0000.0000 (see page 655)															
Time															
Time															
QEICOUNT, type RO, offset 0x018, reset 0x0000.0000 (see page 656)															
Count															
Count															
QEISPEED, type RO, offset 0x01C, reset 0x0000.0000 (see page 657)															
Speed															
Speed															
QEIINTEN, type R/W, offset 0x020, reset 0x0000.0000 (see page 658)															
												IntError	IntDir	IntTimer	IntIndex
QEIRIS, type RO, offset 0x024, reset 0x0000.0000 (see page 659)															
												IntError	IntDir	IntTimer	IntIndex
QEIISC, type R/W1C, offset 0x028, reset 0x0000.0000 (see page 660)															
												IntError	IntDir	IntTimer	IntIndex

D Ordering and Contact Information

D.1 Ordering Information

The figure below defines the full set of potential orderable part numbers for all the Stellaris® LM3S microcontrollers. See the Package Option Addendum for the valid orderable part numbers for the LM3S2678 microcontroller.

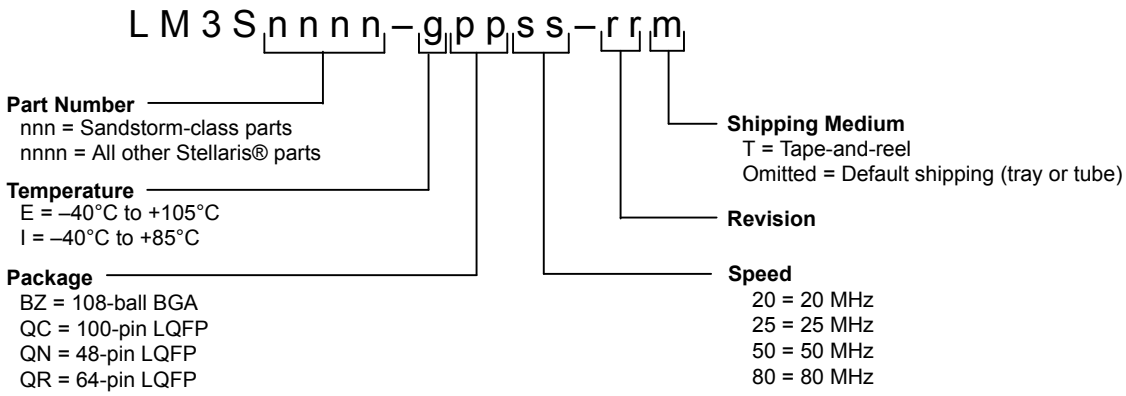

D.2 Part Markings

The Stellaris microcontrollers are marked with an identifying number. This code contains the following information:

- The first line indicates the part number, for example, LM3S9B90.
- In the second line, the first eight characters indicate the temperature, package, speed, revision, and product status. For example in the figure below, IQC80C0X indicates an Industrial temperature (I), 100-pin LQFP package (QC), 80-MHz (80), revision C0 (C0) device. The letter immediately following the revision indicates product status. An X indicates experimental and requires a waiver; an S indicates the part is fully qualified and released to production.
- The remaining characters contain internal tracking numbers.

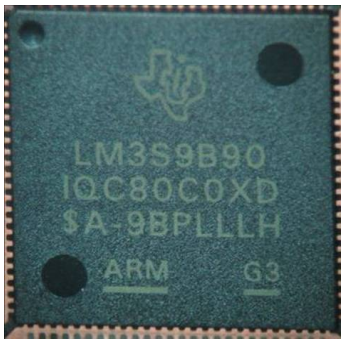

D.3 Kits

The Stellaris Family provides the hardware and software tools that engineers need to begin development quickly.

- Reference Design Kits accelerate product development by providing ready-to-run hardware and comprehensive documentation including hardware design files
- Evaluation Kits provide a low-cost and effective means of evaluating Stellaris microcontrollers before purchase
- Development Kits provide you with all the tools you need to develop and prototype embedded applications right out of the box

See the website at www.ti.com/stellaris for the latest tools available, or ask your distributor.

D.4 Support Information

For support on Stellaris products, contact the TI Worldwide Product Information Center nearest you: http://www-k.ext.ti.com/sc/technical-support/product-information-centers.htm.

E Package Information

E.1 64-Pin LQFP Package

E.1.1 Package Dimensions

Figure E-1. Stellaris LM3S2678 64-Pin LQFP Package

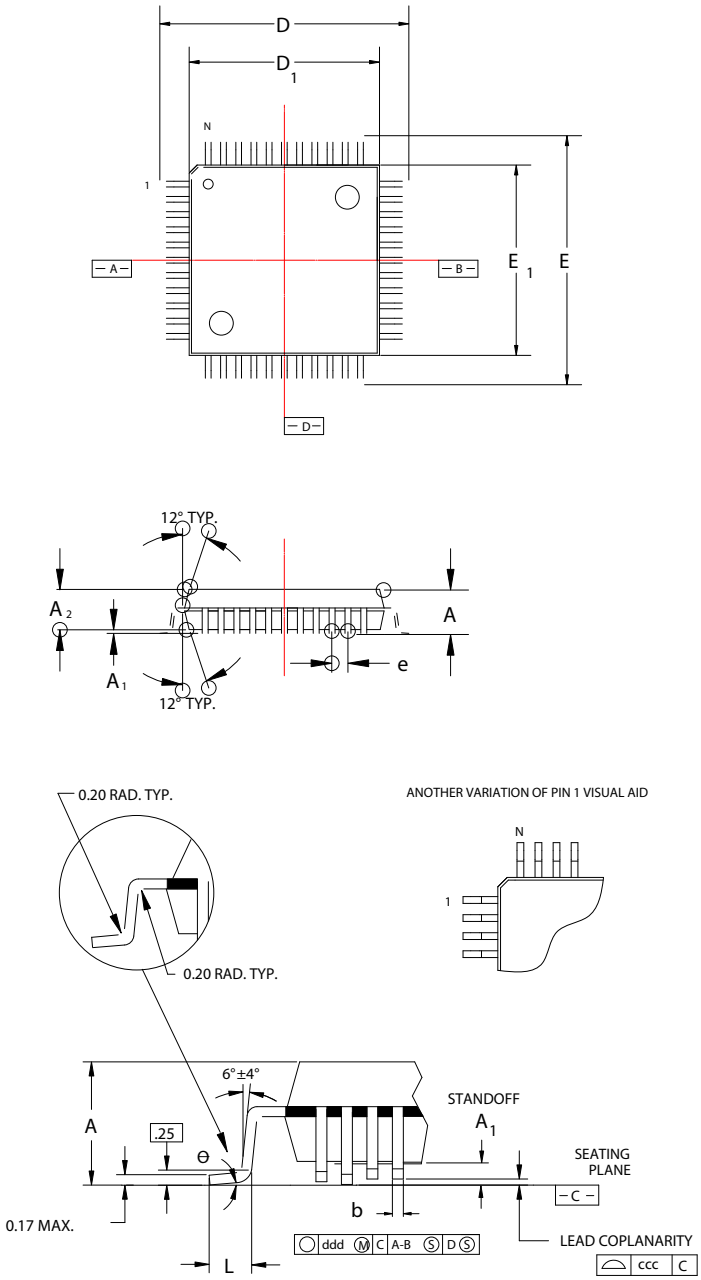

Note: The following notes apply to the package drawing.

1. All dimensions shown in mm.
2. Dimensions shown are nominal with tolerances indicated.
3. Foot length 'L' is measured at gage plane 0.25 mm above seating plane.
4. L/F: Eftec 64T Cu or equivalent, 0.127mm (0.005") thick.

Body +2.00 mm Footprint, 1.4 mm package thickness		
Symbols	Leads	64L
A	Max.	1.60
A_1	-	0.05 Min./0.15 Max.
A_2	±0.05	1.40
D	±0.20	12.00
D_1	±0.10	10.00
E	±0.20	12.00
E_1	±0.10	10.00
L	+0.15/-0.10	0.60
e	Basic	0.50
b	±0.05	0.22
θ	-	0˚-7˚
ddd	Max.	0.08
ccc	Max.	0.08
JEDEC Reference Drawing		MS-026
Variation Designator		BCD

E.1.2 Tray Dimensions

Figure E-2. 64-Pin LQFP Tray Dimensions

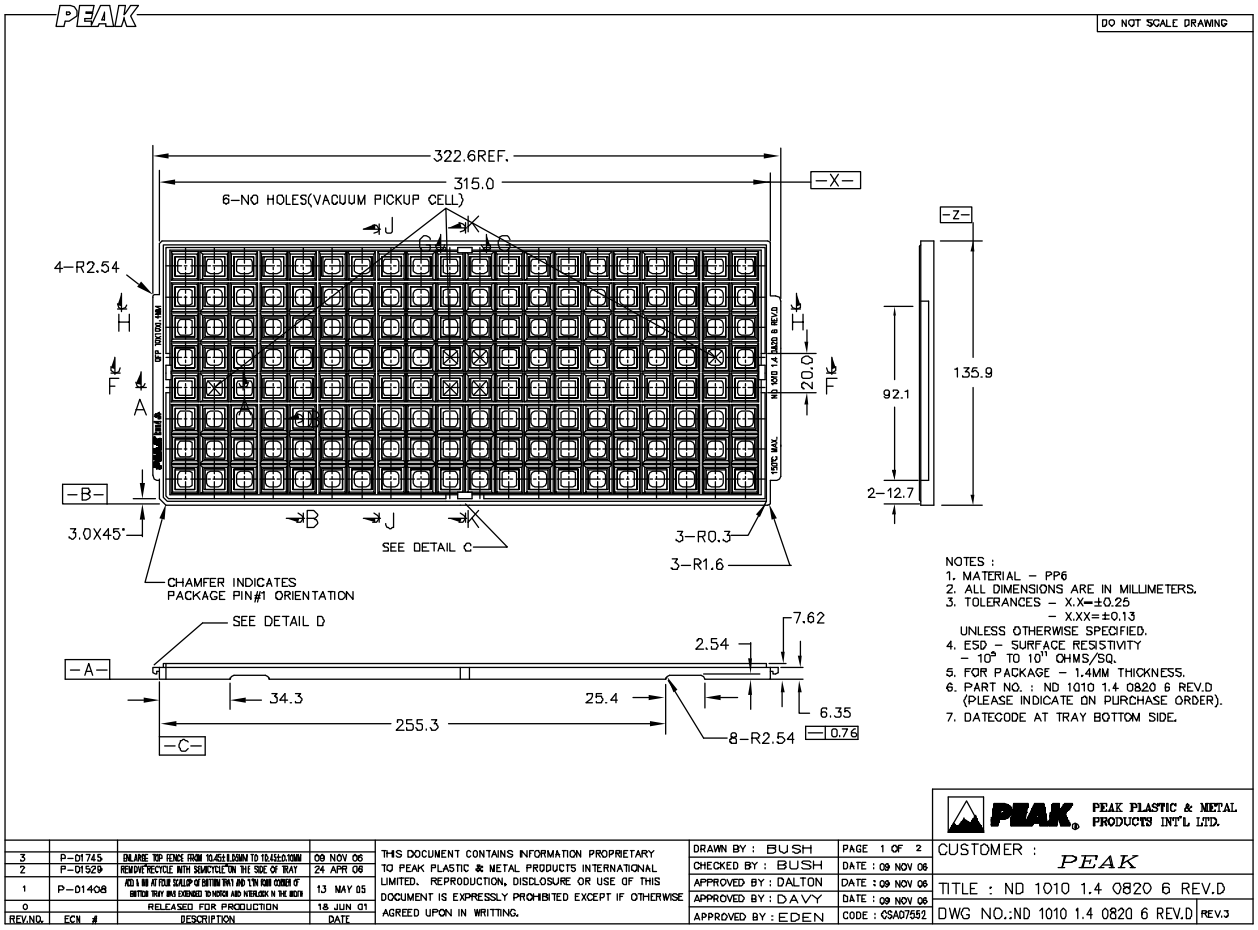

E.1.3 Tape and Reel Dimensions

Figure E-3. 64-Pin LQFP Tape and Reel Dimensions

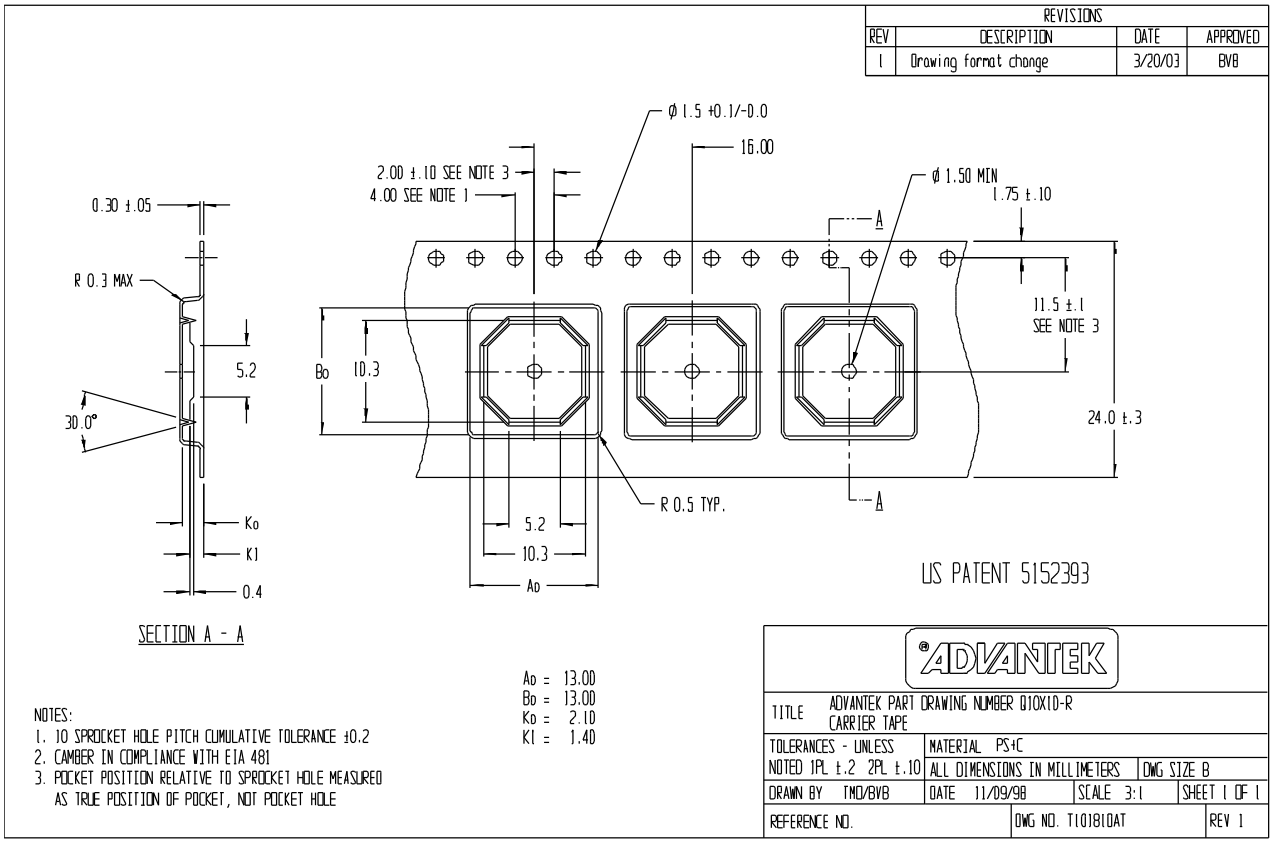

PACKAGING INFORMATION

Orderable part number	Status (1)	Material type (2)	Package | Pins	Package qty | Carrier	RoHS (3)	Lead finish/ Ball material (4)	MSL rating/ Peak reflow (5)	Op temp (°C)	Part marking (6)
LM3S2678-IQR50-A0T	NRND	Production	LQFP (PM) | 64	1000 | LARGE T&R	Yes	NIPDAU	Level-3-260C-168 HR	-40 to 85	LM3S2678 IQR50 PM
LM3S2678-IQR50-A0T.A	NRND	Production	LQFP (PM) | 64	1000 | LARGE T&R	Yes	NIPDAU	Level-3-260C-168 HR	-40 to 85	LM3S2678 IQR50 PM

(1) **Status:** For more details on status, see our product life cycle.

(2) **Material type:** When designated, preproduction parts are prototypes/experimental devices, and are not yet approved or released for full production. Testing and final process, including without limitation quality assurance, reliability performance testing, and/or process qualification, may not yet be complete, and this item is subject to further changes or possible discontinuation. If available for ordering, purchases will be subject to an additional waiver at checkout, and are intended for early internal evaluation purposes only. These items are sold without warranties of any kind.

(3) **RoHS values:** Yes, No, RoHS Exempt. See the TI RoHS Statement for additional information and value definition.

(4) **Lead finish/Ball material:** Parts may have multiple material finish options. Finish options are separated by a vertical ruled line. Lead finish/Ball material values may wrap to two lines if the finish value exceeds the maximum column width.

(5) **MSL rating/Peak reflow:** The moisture sensitivity level ratings and peak solder (reflow) temperatures. In the event that a part has multiple moisture sensitivity ratings, only the lowest level per JEDEC standards is shown. Refer to the shipping label for the actual reflow temperature that will be used to mount the part to the printed circuit board.

(6) **Part marking:** There may be an additional marking, which relates to the logo, the lot trace code information, or the environmental category of the part.

Multiple part markings will be inside parentheses. Only one part marking contained in parentheses and separated by a "~" will appear on a part. If a line is indented then it is a continuation of the previous line and the two combined represent the entire part marking for that device.

Important Information and Disclaimer: The information provided on this page represents TI's knowledge and belief as of the date that it is provided. TI bases its knowledge and belief on information provided by third parties, and makes no representation or warranty as to the accuracy of such information. Efforts are underway to better integrate information from third parties. TI has taken and continues to take reasonable steps to provide representative and accurate information but may not have conducted destructive testing or chemical analysis on incoming materials and chemicals. TI and TI suppliers consider certain information to be proprietary, and thus CAS numbers and other limited information may not be available for release.

In no event shall TI's liability arising out of such information exceed the total purchase price of the TI part(s) at issue in this document sold by TI to Customer on an annual basis.

TAPE AND REEL INFORMATION

REEL DIMENSIONS

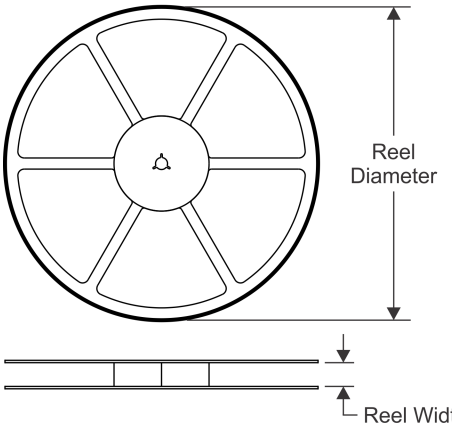

TAPE DIMENSIONS

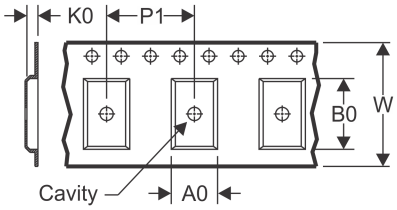

A0	Dimension designed to accommodate the component width
B0	Dimension designed to accommodate the component length
K0	Dimension designed to accommodate the component thickness
W	Overall width of the carrier tape
P1	Pitch between successive cavity centers

QUADRANT ASSIGNMENTS FOR PIN 1 ORIENTATION IN TAPE

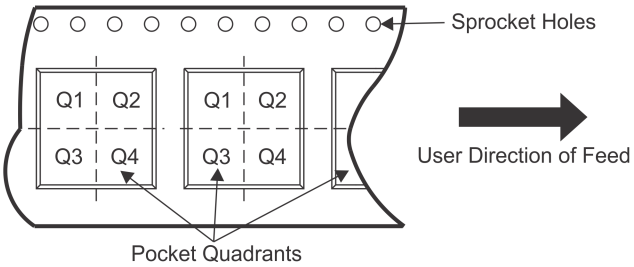

*All dimensions are nominal

Device	Package Type	Package Drawing	Pins	SPQ	Reel Diameter (mm)	Reel Width W1 (mm)	A0 (mm)	B0 (mm)	K0 (mm)	P1 (mm)	W (mm)	Pin1 Quadrant
LM3S2678-IQR50-A0T	LQFP	PM	64	1000	330.0	24.4	12.3	12.3	2.5	16.0	24.0	Q2

TAPE AND REEL BOX DIMENSIONS

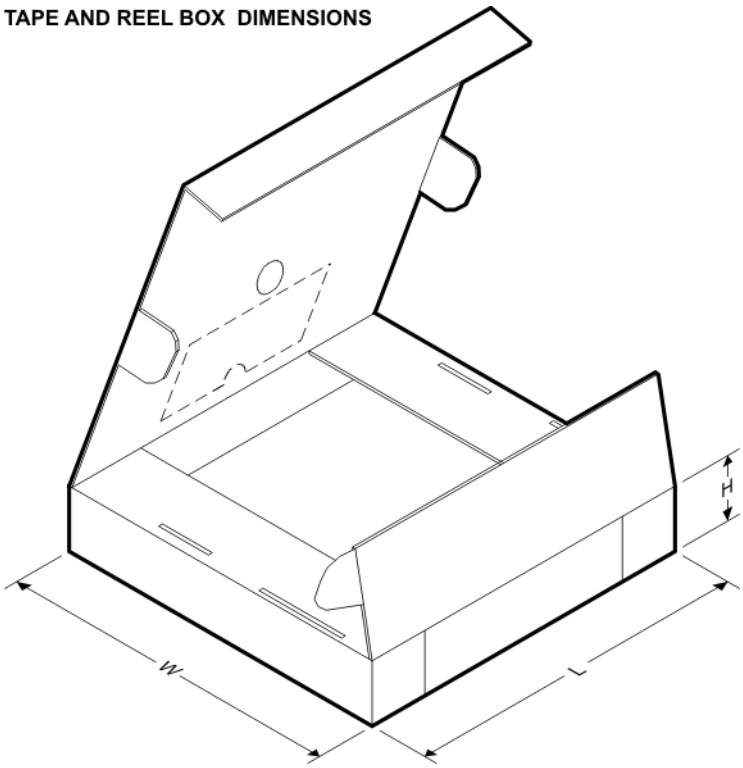

*All dimensions are nominal

Device	Package Type	Package Drawing	Pins	SPQ	Length (mm)	Width (mm)	Height (mm)
LM3S2678-IQR50-A0T	LQFP	PM	64	1000	367.0	367.0	45.0

IMPORTANT NOTICE AND DISCLAIMER

TI PROVIDES TECHNICAL AND RELIABILITY DATA (INCLUDING DATA SHEETS), DESIGN RESOURCES (INCLUDING REFERENCE DESIGNS), APPLICATION OR OTHER DESIGN ADVICE, WEB TOOLS, SAFETY INFORMATION, AND OTHER RESOURCES “AS IS” AND WITH ALL FAULTS, AND DISCLAIMS ALL WARRANTIES, EXPRESS AND IMPLIED, INCLUDING WITHOUT LIMITATION ANY IMPLIED WARRANTIES OF MERCHANTABILITY, FITNESS FOR A PARTICULAR PURPOSE OR NON-INFRINGEMENT OF THIRD PARTY INTELLECTUAL PROPERTY RIGHTS.

These resources are intended for skilled developers designing with TI products. You are solely responsible for (1) selecting the appropriate TI products for your application, (2) designing, validating and testing your application, and (3) ensuring your application meets applicable standards, and any other safety, security, regulatory or other requirements.

These resources are subject to change without notice. TI grants you permission to use these resources only for development of an application that uses the TI products described in the resource. Other reproduction and display of these resources is prohibited. No license is granted to any other TI intellectual property right or to any third party intellectual property right. TI disclaims responsibility for, and you will fully indemnify TI and its representatives against, any claims, damages, costs, losses, and liabilities arising out of your use of these resources.

TI’s products are provided subject to TI’s Terms of Sale or other applicable terms available either on ti.com or provided in conjunction with such TI products. TI’s provision of these resources does not expand or otherwise alter TI’s applicable warranties or warranty disclaimers for TI products.

TI objects to and rejects any additional or different terms you may have proposed.

Mailing Address: Texas Instruments, Post Office Box 655303, Dallas, Texas 75265
Copyright © 2025, Texas Instruments Incorporated