TAPE AND REEL INFORMATION

REEL DIMENSIONS

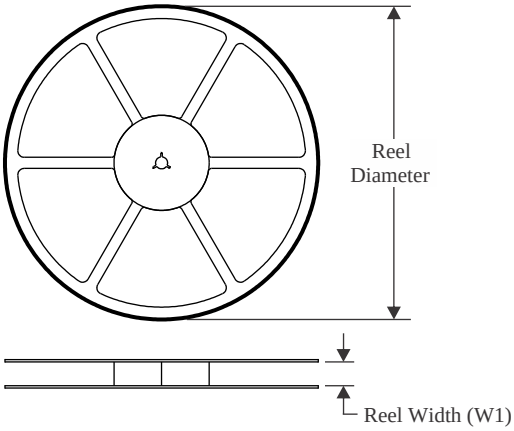

TAPE DIMENSIONS

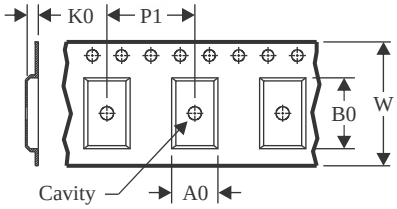

A0	Dimension designed to accommodate the component width
B0	Dimension designed to accommodate the component length
K0	Dimension designed to accommodate the component thickness
W	Overall width of the carrier tape
P1	Pitch between successive cavity centers

QUADRANT ASSIGNMENTS FOR PIN 1 ORIENTATION IN TAPE

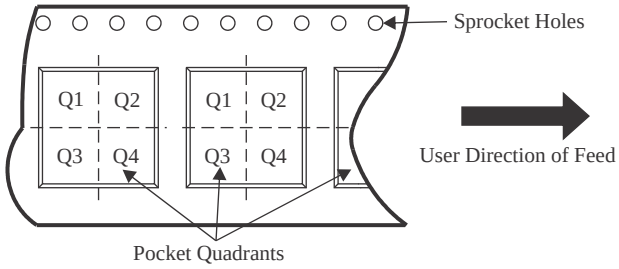

*All dimensions are nominal

Device	Package Type	Package Drawing	Pins	SPQ	Reel Diameter (mm)	Reel Width W1 (mm)	A0 (mm)	B0 (mm)	K0 (mm)	P1 (mm)	W (mm)	Pin1 Quadrant
TPS7A1601DGNR	HVSSOP	DGN	8	2500	330.0	12.4	5.3	3.3	1.3	8.0	12.0	Q1
TPS7A1601DGNT	HVSSOP	DGN	8	250	180.0	12.4	5.3	3.3	1.3	8.0	12.0	Q1
TPS7A1601DRBR	SON	DRB	8	3000	330.0	12.4	3.3	3.3	1.0	8.0	12.0	Q2
TPS7A1601DRBT	SON	DRB	8	250	180.0	12.4	3.3	3.3	1.0	8.0	12.0	Q2
TPS7A1633DGNR	HVSSOP	DGN	8	2500	330.0	12.4	5.3	3.3	1.3	8.0	12.0	Q1
TPS7A1633DGNT	HVSSOP	DGN	8	250	180.0	12.4	5.3	3.3	1.3	8.0	12.0	Q1
TPS7A1633DRBR	SON	DRB	8	3000	330.0	12.4	3.3	3.3	1.0	8.0	12.0	Q2
TPS7A1633DRBT	SON	DRB	8	250	180.0	12.4	3.3	3.3	1.0	8.0	12.0	Q2
TPS7A1650DGNR	HVSSOP	DGN	8	2500	330.0	12.4	5.3	3.3	1.3	8.0	12.0	Q1
TPS7A1650DGNT	HVSSOP	DGN	8	250	180.0	12.4	5.3	3.3	1.3	8.0	12.0	Q1
TPS7A1650DRBR	SON	DRB	8	3000	330.0	12.4	3.3	3.3	1.0	8.0	12.0	Q2
TPS7A1650DRBT	SON	DRB	8	250	180.0	12.4	3.3	3.3	1.0	8.0	12.0	Q2

TAPE AND REEL BOX DIMENSIONS

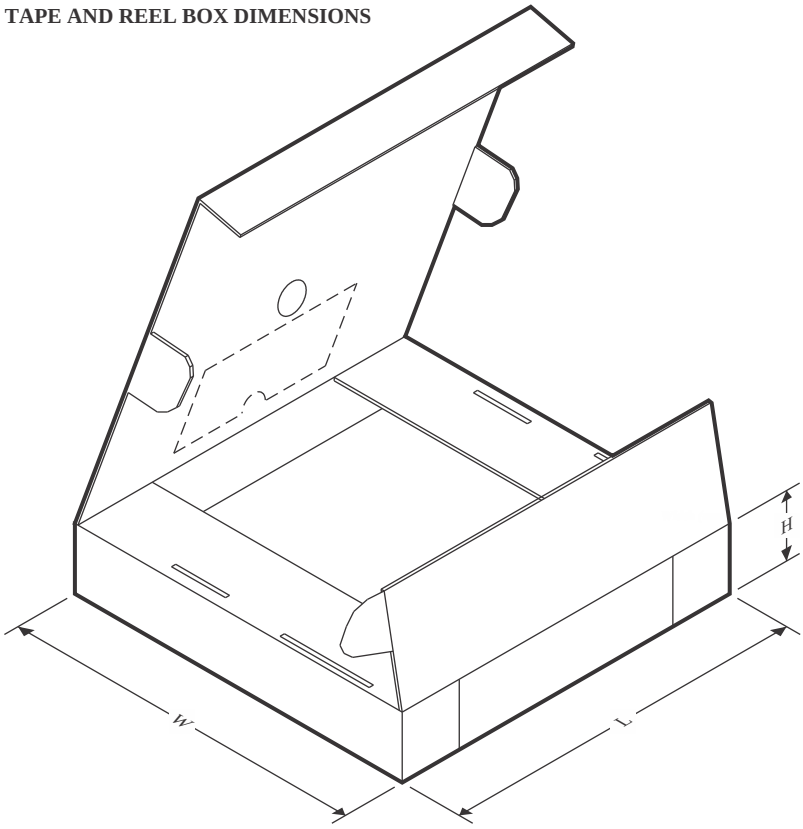

*All dimensions are nominal

Device	Package Type	Package Drawing	Pins	SPQ	Length (mm)	Width (mm)	Height (mm)
TPS7A1601DGNR	HVSSOP	DGN	8	2500	367.0	367.0	38.0
TPS7A1601DGNT	HVSSOP	DGN	8	250	213.0	191.0	35.0
TPS7A1601DRBR	SON	DRB	8	3000	367.0	367.0	38.0
TPS7A1601DRBT	SON	DRB	8	250	213.0	191.0	35.0
TPS7A1633DGNR	HVSSOP	DGN	8	2500	367.0	367.0	38.0
TPS7A1633DGNT	HVSSOP	DGN	8	250	213.0	191.0	35.0
TPS7A1633DRBR	SON	DRB	8	3000	367.0	367.0	38.0
TPS7A1633DRBT	SON	DRB	8	250	213.0	191.0	35.0
TPS7A1650DGNR	HVSSOP	DGN	8	2500	367.0	367.0	38.0
TPS7A1650DGNT	HVSSOP	DGN	8	250	213.0	191.0	35.0
TPS7A1650DRBR	SON	DRB	8	3000	367.0	367.0	38.0
TPS7A1650DRBT	SON	DRB	8	250	213.0	191.0	35.0