TAPE AND REEL INFORMATION

REEL DIMENSIONS

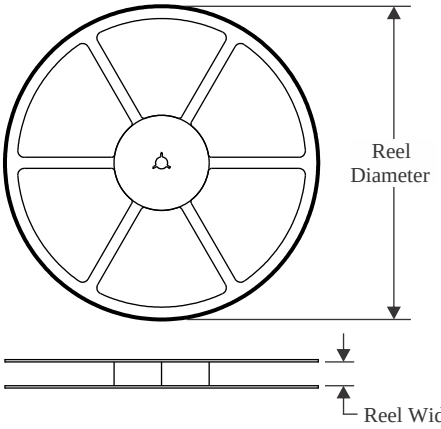

TAPE DIMENSIONS

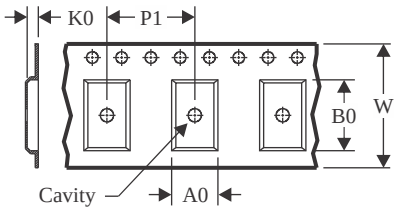

A0	Dimension designed to accommodate the component width
B0	Dimension designed to accommodate the component length
K0	Dimension designed to accommodate the component thickness
W	Overall width of the carrier tape
P1	Pitch between successive cavity centers

QUADRANT ASSIGNMENTS FOR PIN 1 ORIENTATION IN TAPE

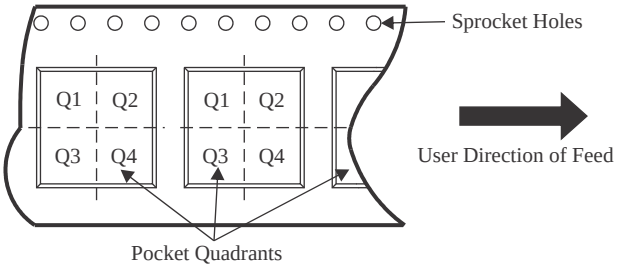

*All dimensions are nominal

Device	Package Type	Package Drawing	Pins	SPQ	Reel Diameter (mm)	Reel Width W1 (mm)	A0 (mm)	B0 (mm)	K0 (mm)	P1 (mm)	W (mm)	Pin1 Quadrant
TPS62175DQCR	WSON	DQC	10	3000	180.0	8.4	2.25	3.25	1.05	4.0	8.0	Q1
TPS62175DQCR	WSON	DQC	10	3000	180.0	8.4	2.25	3.25	1.05	4.0	8.0	Q1
TPS62175DQCT	WSON	DQC	10	250	180.0	8.4	2.25	3.25	1.05	4.0	8.0	Q1
TPS62175DQCT	WSON	DQC	10	250	180.0	8.4	2.25	3.25	1.05	4.0	8.0	Q1
TPS62177DQCR	WSON	DQC	10	3000	180.0	8.4	2.25	3.25	1.05	4.0	8.0	Q1
TPS62177DQCR	WSON	DQC	10	3000	180.0	8.4	2.25	3.25	1.05	4.0	8.0	Q1
TPS62177DQCT	WSON	DQC	10	250	180.0	8.4	2.25	3.25	1.05	4.0	8.0	Q1
TPS62177DQCT	WSON	DQC	10	250	180.0	8.4	2.25	3.25	1.05	4.0	8.0	Q1

TAPE AND REEL BOX DIMENSIONS

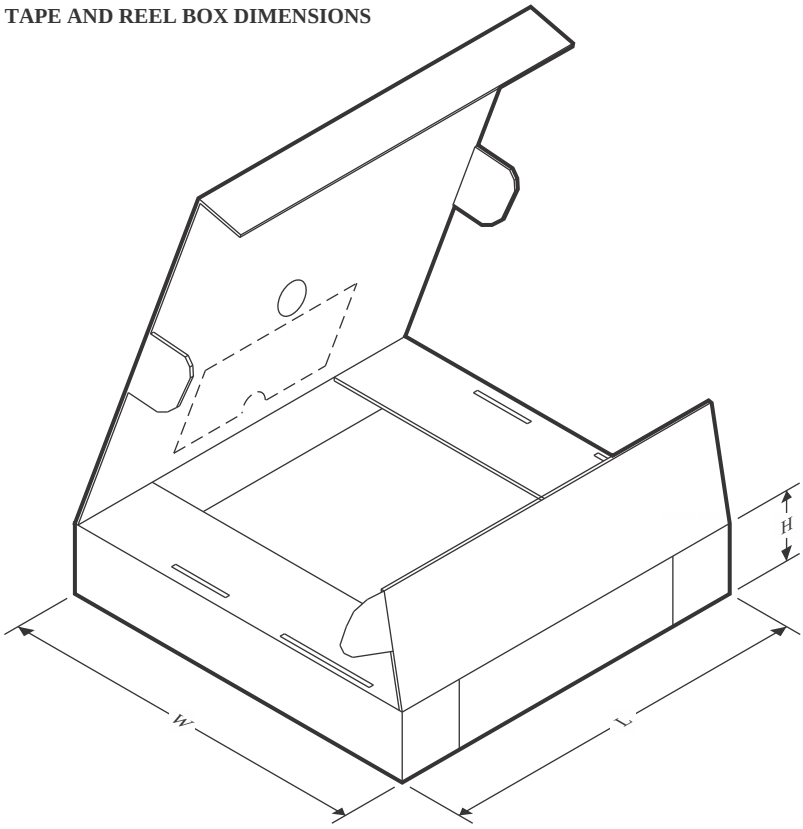

*All dimensions are nominal

Device	Package Type	Package Drawing	Pins	SPQ	Length (mm)	Width (mm)	Height (mm)
TPS62175DQCR	WSON	DQC	10	3000	182.0	182.0	20.0
TPS62175DQCR	WSON	DQC	10	3000	210.0	185.0	35.0
TPS62175DQCT	WSON	DQC	10	250	210.0	185.0	35.0
TPS62175DQCT	WSON	DQC	10	250	182.0	182.0	20.0
TPS62177DQCR	WSON	DQC	10	3000	182.0	182.0	20.0
TPS62177DQCR	WSON	DQC	10	3000	210.0	185.0	35.0
TPS62177DQCT	WSON	DQC	10	250	210.0	185.0	35.0
TPS62177DQCT	WSON	DQC	10	250	182.0	182.0	20.0