TAPE AND REEL INFORMATION

REEL DIMENSIONS

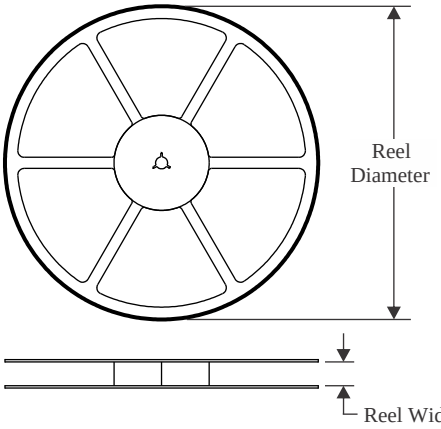

TAPE DIMENSIONS

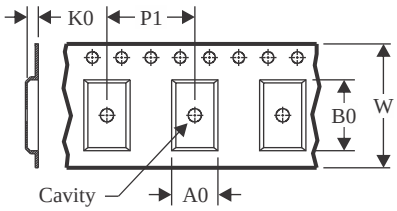

A0	Dimension designed to accommodate the component width
B0	Dimension designed to accommodate the component length
K0	Dimension designed to accommodate the component thickness
W	Overall width of the carrier tape
P1	Pitch between successive cavity centers

QUADRANT ASSIGNMENTS FOR PIN 1 ORIENTATION IN TAPE

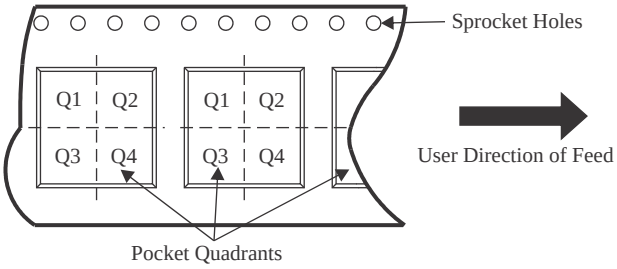

*All dimensions are nominal

Device	Package Type	Package Drawing	Pins	SPQ	Reel Diameter (mm)	Reel Width W1 (mm)	A0 (mm)	B0 (mm)	K0 (mm)	P1 (mm)	W (mm)	Pin1 Quadrant
TPS61253YFFR	DSBGA	YFF	9	3000	180.0	8.4	1.41	1.31	0.69	4.0	8.0	Q1
TPS61253YFFT	DSBGA	YFF	9	250	180.0	8.4	1.41	1.31	0.69	4.0	8.0	Q1
TPS61254YFFR	DSBGA	YFF	9	3000	180.0	8.4	1.41	1.31	0.69	4.0	8.0	Q1
TPS61254YFFT	DSBGA	YFF	9	250	180.0	8.4	1.41	1.31	0.69	4.0	8.0	Q1
TPS61256YFFR	DSBGA	YFF	9	3000	180.0	8.4	1.41	1.31	0.69	4.0	8.0	Q1
TPS61256YFFT	DSBGA	YFF	9	250	180.0	8.4	1.41	1.31	0.69	4.0	8.0	Q1
TPS61258YFFR	DSBGA	YFF	9	3000	180.0	8.4	1.41	1.31	0.69	4.0	8.0	Q1
TPS61258YFFT	DSBGA	YFF	9	250	180.0	8.4	1.41	1.31	0.69	4.0	8.0	Q1
TPS612592YFFR	DSBGA	YFF	9	3000	180.0	8.4	1.41	1.31	0.69	4.0	8.0	Q1
TPS612592YFFT	DSBGA	YFF	9	250	180.0	8.4	1.41	1.31	0.69	4.0	8.0	Q1
TPS61259YFFR	DSBGA	YFF	9	3000	180.0	8.4	1.41	1.31	0.69	4.0	8.0	Q1
TPS61259YFFT	DSBGA	YFF	9	250	180.0	8.4	1.41	1.31	0.69	4.0	8.0	Q1

TAPE AND REEL BOX DIMENSIONS

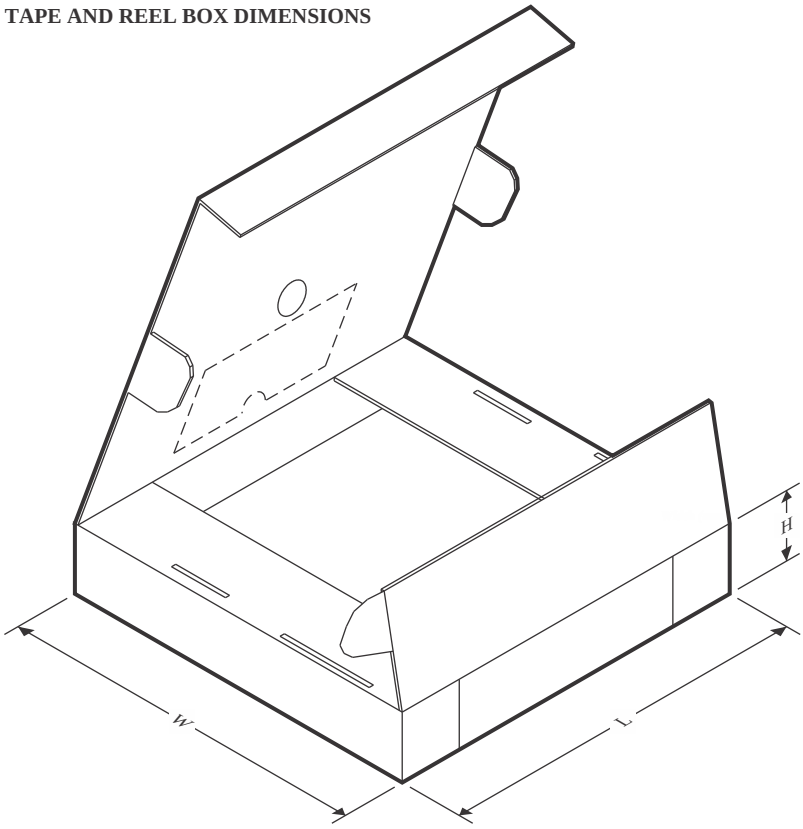

*All dimensions are nominal

Device	Package Type	Package Drawing	Pins	SPQ	Length (mm)	Width (mm)	Height (mm)
TPS61253YFFR	DSBGA	YFF	9	3000	182.0	182.0	20.0
TPS61253YFFT	DSBGA	YFF	9	250	182.0	182.0	20.0
TPS61254YFFR	DSBGA	YFF	9	3000	182.0	182.0	20.0
TPS61254YFFT	DSBGA	YFF	9	250	182.0	182.0	20.0
TPS61256YFFR	DSBGA	YFF	9	3000	182.0	182.0	20.0
TPS61256YFFT	DSBGA	YFF	9	250	182.0	182.0	20.0
TPS61258YFFR	DSBGA	YFF	9	3000	182.0	182.0	20.0
TPS61258YFFT	DSBGA	YFF	9	250	182.0	182.0	20.0
TPS612592YFFR	DSBGA	YFF	9	3000	182.0	182.0	20.0
TPS612592YFFT	DSBGA	YFF	9	250	182.0	182.0	20.0
TPS61259YFFR	DSBGA	YFF	9	3000	182.0	182.0	20.0
TPS61259YFFT	DSBGA	YFF	9	250	182.0	182.0	20.0