TAPE AND REEL INFORMATION

REEL DIMENSIONS

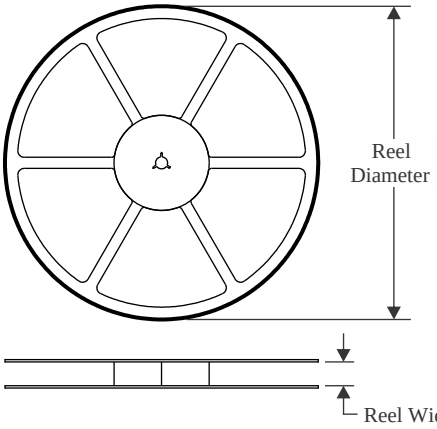

TAPE DIMENSIONS

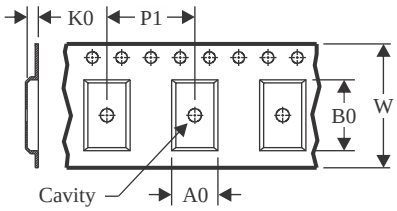

A0	Dimension designed to accommodate the component width
B0	Dimension designed to accommodate the component length
K0	Dimension designed to accommodate the component thickness
W	Overall width of the carrier tape
P1	Pitch between successive cavity centers

QUADRANT ASSIGNMENTS FOR PIN 1 ORIENTATION IN TAPE

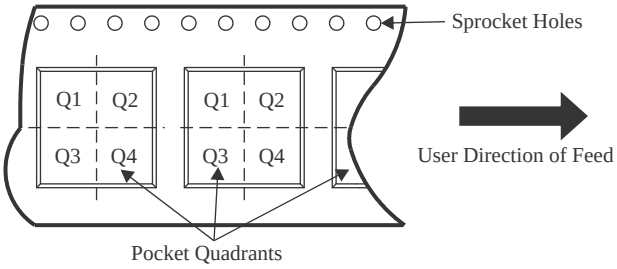

*All dimensions are nominal

Device	Package Type	Package Drawing	Pins	SPQ	Reel Diameter (mm)	Reel Width W1 (mm)	A0 (mm)	B0 (mm)	K0 (mm)	P1 (mm)	W (mm)	Pin1 Quadrant
TPS61040DBVR	SOT-23	DBV	5	3000	178.0	9.0	3.23	3.17	1.37	4.0	8.0	Q3
TPS61040DBVR	SOT-23	DBV	5	3000	180.0	8.4	3.2	3.2	1.4	4.0	8.0	Q3
TPS61040DBVRG4	SOT-23	DBV	5	3000	180.0	8.4	3.2	3.2	1.4	4.0	8.0	Q3
TPS61040DDCR	SOT-23-THIN	DDC	5	3000	180.0	8.4	3.2	3.2	1.4	4.0	8.0	Q3
TPS61040DDCT	SOT-23-THIN	DDC	5	250	180.0	8.4	3.2	3.2	1.4	4.0	8.0	Q3
TPS61040DRVR	WSON	DRV	6	3000	178.0	8.4	2.25	2.25	1.0	4.0	8.0	Q2
TPS61040DRVT	WSON	DRV	6	250	178.0	8.4	2.25	2.25	1.0	4.0	8.0	Q2
TPS61041DBVR	SOT-23	DBV	5	3000	179.0	8.4	3.2	3.2	1.4	4.0	8.0	Q3
TPS61041DBVR	SOT-23	DBV	5	3000	178.0	9.0	3.23	3.17	1.37	4.0	8.0	Q3
TPS61041DRVR	WSON	DRV	6	3000	179.0	8.4	2.2	2.2	1.2	4.0	8.0	Q2
TPS61041DRVR	WSON	DRV	6	3000	178.0	8.4	2.25	2.25	1.0	4.0	8.0	Q2
TPS61041DRVT	WSON	DRV	6	250	179.0	8.4	2.2	2.2	1.2	4.0	8.0	Q2
TPS61041DRVT	WSON	DRV	6	250	178.0	8.4	2.25	2.25	1.0	4.0	8.0	Q2

TAPE AND REEL BOX DIMENSIONS

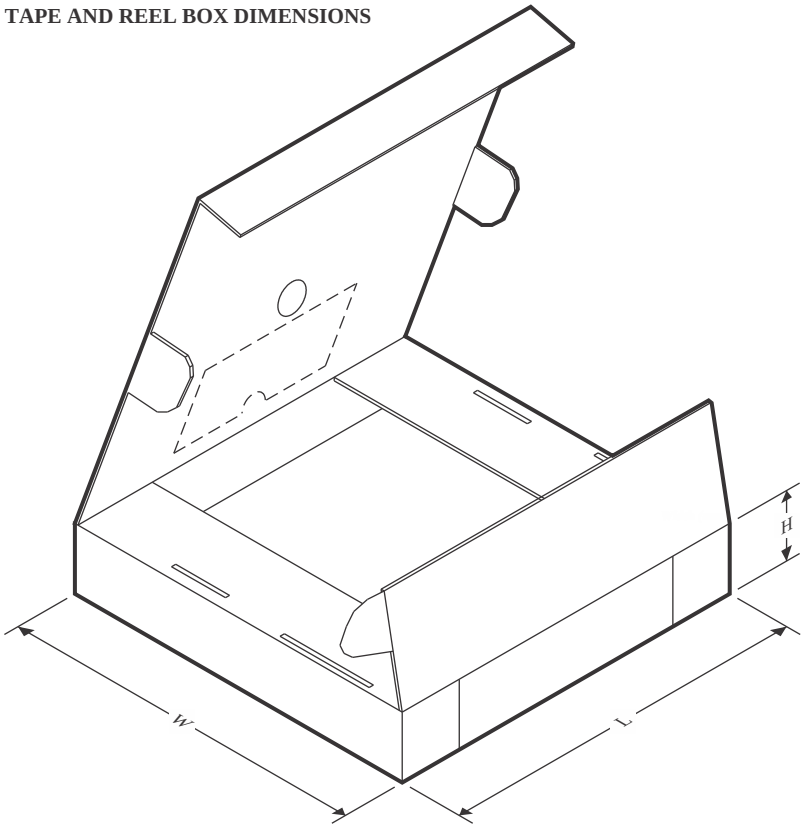

*All dimensions are nominal

Device	Package Type	Package Drawing	Pins	SPQ	Length (mm)	Width (mm)	Height (mm)
TPS61040DBVR	SOT-23	DBV	5	3000	180.0	180.0	18.0
TPS61040DBVR	SOT-23	DBV	5	3000	200.0	183.0	25.0
TPS61040DBVRG4	SOT-23	DBV	5	3000	200.0	183.0	25.0
TPS61040DDCR	SOT-23-THIN	DDC	5	3000	213.0	191.0	35.0
TPS61040DDCT	SOT-23-THIN	DDC	5	250	213.0	191.0	35.0
TPS61040DRVR	WSON	DRV	6	3000	205.0	200.0	33.0
TPS61040DRVT	WSON	DRV	6	250	205.0	200.0	33.0
TPS61041DBVR	SOT-23	DBV	5	3000	200.0	183.0	25.0
TPS61041DBVR	SOT-23	DBV	5	3000	180.0	180.0	18.0
TPS61041DRVR	WSON	DRV	6	3000	200.0	183.0	25.0
TPS61041DRVR	WSON	DRV	6	3000	205.0	200.0	33.0
TPS61041DRVT	WSON	DRV	6	250	203.0	203.0	35.0
TPS61041DRVT	WSON	DRV	6	250	205.0	200.0	33.0