TAPE AND REEL INFORMATION

REEL DIMENSIONS

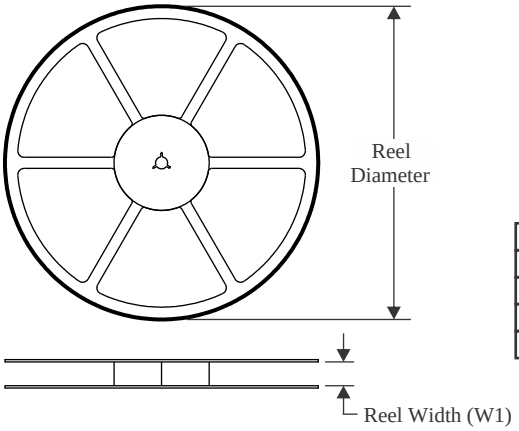

TAPE DIMENSIONS

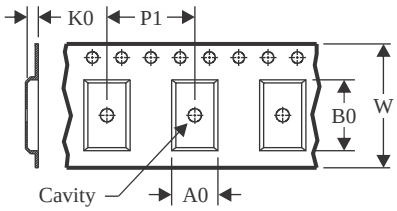

A0	Dimension designed to accommodate the component width
B0	Dimension designed to accommodate the component length
K0	Dimension designed to accommodate the component thickness
W	Overall width of the carrier tape
P1	Pitch between successive cavity centers

QUADRANT ASSIGNMENTS FOR PIN 1 ORIENTATION IN TAPE

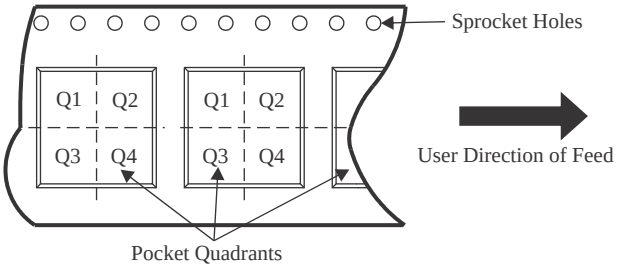

*All dimensions are nominal

Device	Package Type	Package Drawing	Pins	SPQ	Reel Diameter (mm)	Reel Width W1 (mm)	A0 (mm)	B0 (mm)	K0 (mm)	P1 (mm)	W (mm)	Pin1 Quadrant
TPS54228DDAR	SO PowerPAD	DDA	8	2500	330.0	12.8	6.4	5.2	2.1	8.0	12.0	Q1
TPS54228DR	SOIC	D	8	2500	330.0	12.8	6.4	5.2	2.1	8.0	12.0	Q1
TPS54228DRCR	VSON	DRC	10	3000	330.0	12.4	3.3	3.3	1.1	8.0	12.0	Q2
TPS54228DRCT	VSON	DRC	10	250	180.0	12.4	3.3	3.3	1.1	8.0	12.0	Q2

TAPE AND REEL BOX DIMENSIONS

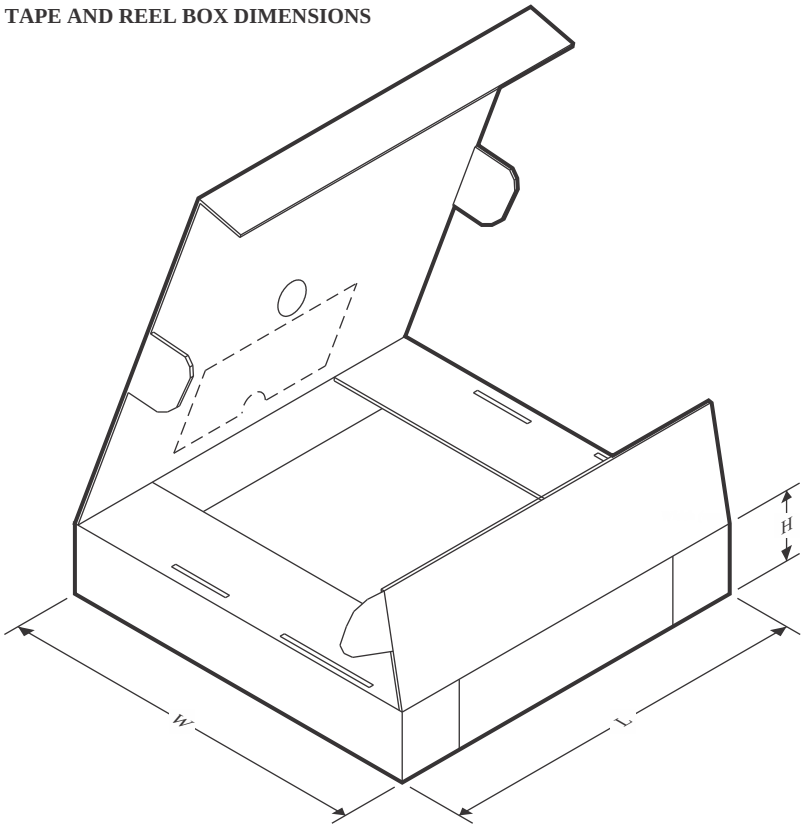

*All dimensions are nominal

Device	Package Type	Package Drawing	Pins	SPQ	Length (mm)	Width (mm)	Height (mm)
TPS54228DDAR	SO PowerPAD	DDA	8	2500	366.0	364.0	50.0
TPS54228DR	SOIC	D	8	2500	364.0	364.0	27.0
TPS54228DRCR	VSON	DRC	10	3000	335.0	335.0	25.0
TPS54228DRCT	VSON	DRC	10	250	182.0	182.0	20.0

TUBE

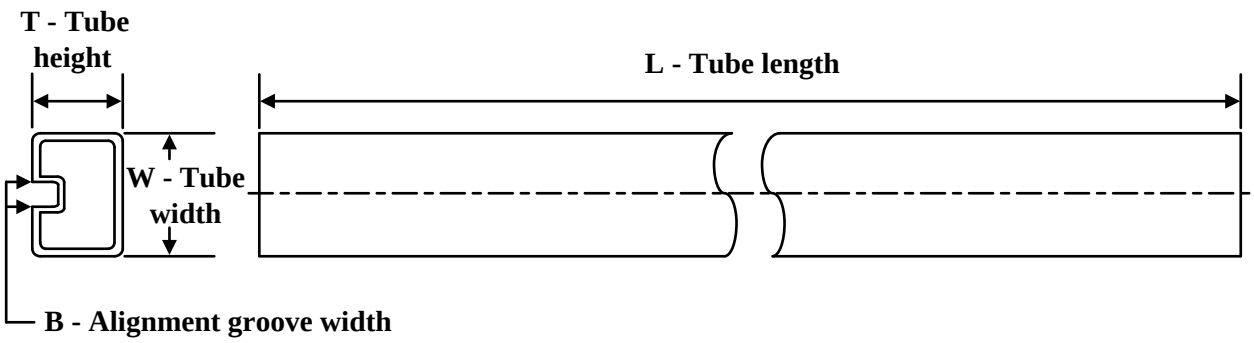

*All dimensions are nominal

Device	Package Name	Package Type	Pins	SPQ	L (mm)	W (mm)	T (µm)	B (mm)
TPS54228D	D	SOIC	8	75	517	7.87	635	4.25
TPS54228DDA	DDA	HSOIC	8	75	517	7.87	635	4.25