TAPE AND REEL INFORMATION

REEL DIMENSIONS

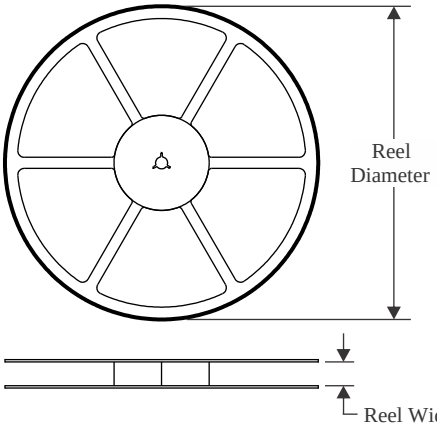

TAPE DIMENSIONS

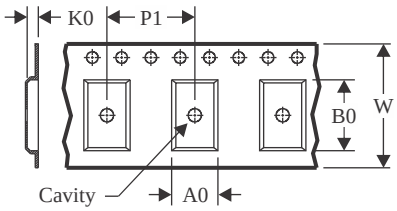

A0	Dimension designed to accommodate the component width
B0	Dimension designed to accommodate the component length
K0	Dimension designed to accommodate the component thickness
W	Overall width of the carrier tape
P1	Pitch between successive cavity centers

QUADRANT ASSIGNMENTS FOR PIN 1 ORIENTATION IN TAPE

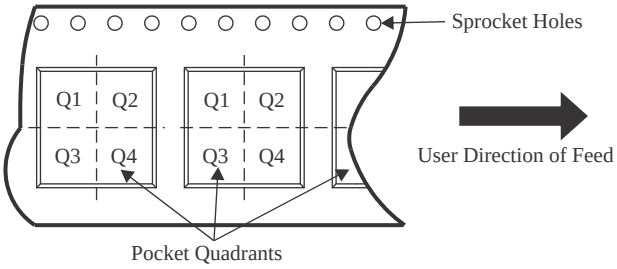

*All dimensions are nominal

Device	Package Type	Package Drawing	Pins	SPQ	Reel Diameter (mm)	Reel Width W1 (mm)	A0 (mm)	B0 (mm)	K0 (mm)	P1 (mm)	W (mm)	Pin1 Quadrant
TL081ACDR	SOIC	D	8	2500	330.0	12.4	6.4	5.2	2.1	8.0	12.0	Q1
TL081ACDR	SOIC	D	8	2500	330.0	12.4	6.4	5.2	2.1	8.0	12.0	Q1
TL081BCDR	SOIC	D	8	2500	330.0	12.4	6.4	5.2	2.1	8.0	12.0	Q1
TL081BCDR	SOIC	D	8	2500	330.0	12.4	6.4	5.2	2.1	8.0	12.0	Q1
TL081CDR	SOIC	D	8	2500	330.0	12.4	6.4	5.2	2.1	8.0	12.0	Q1
TL081CDR	SOIC	D	8	2500	330.0	12.4	6.4	5.2	2.1	8.0	12.0	Q1
TL081CPSR	SO	PS	8	2000	330.0	16.4	8.35	6.6	2.4	12.0	16.0	Q1
TL081HIDBVR	SOT-23	DBV	5	3000	180.0	8.4	3.2	3.2	1.4	4.0	8.0	Q3
TL081HIDCKR	SC70	DCK	5	3000	178.0	9.0	2.4	2.5	1.2	4.0	8.0	Q3
TL081HIDR	SOIC	D	8	3000	330.0	12.4	6.4	5.2	2.1	8.0	12.0	Q1
TL081IDR	SOIC	D	8	2500	330.0	12.4	6.4	5.2	2.1	8.0	12.0	Q1
TL081IDR	SOIC	D	8	2500	330.0	12.4	6.4	5.2	2.1	8.0	12.0	Q1
TL082ACDR	SOIC	D	8	2500	330.0	12.4	6.4	5.2	2.1	8.0	12.0	Q1
TL082ACDR	SOIC	D	8	2500	330.0	12.4	6.4	5.2	2.1	8.0	12.0	Q1
TL082ACPSR	SO	PS	8	2000	330.0	16.4	8.35	6.6	2.4	12.0	16.0	Q1
TL082BCDR	SOIC	D	8	2500	330.0	12.4	6.4	5.2	2.1	8.0	12.0	Q1

Device	Package Type	Package Drawing	Pins	SPQ	Reel Diameter (mm)	Reel Width W1 (mm)	A0 (mm)	B0 (mm)	K0 (mm)	P1 (mm)	W (mm)	Pin1 Quadrant
TL082CDR	SOIC	D	8	2500	330.0	12.4	6.4	5.2	2.1	8.0	12.0	Q1
TL082CDR	SOIC	D	8	2500	330.0	12.4	6.4	5.2	2.1	8.0	12.0	Q1
TL082CPSR	SO	PS	8	2000	330.0	16.4	8.35	6.6	2.4	12.0	16.0	Q1
TL082CPWR	TSSOP	PW	8	2000	330.0	12.4	7.0	3.6	1.6	8.0	12.0	Q1
TL082CPWR	TSSOP	PW	8	2000	330.0	12.4	7.0	3.6	1.6	8.0	12.0	Q1
TL082HIDDFR	SOT-23-THIN	DDF	8	3000	180.0	8.4	3.2	3.2	1.4	4.0	8.0	Q3
TL082HIDR	SOIC	D	8	3000	330.0	12.4	6.4	5.2	2.1	8.0	12.0	Q1
TL082HIPWR	TSSOP	PW	8	3000	330.0	12.4	7.0	3.6	1.6	8.0	12.0	Q1
TL082IDR	SOIC	D	8	2500	330.0	12.4	6.4	5.2	2.1	8.0	12.0	Q1
TL082IDR	SOIC	D	8	2500	330.0	12.4	6.4	5.2	2.1	8.0	12.0	Q1
TL082IDR	SOIC	D	8	2500	330.0	12.4	6.4	5.2	2.1	8.0	12.0	Q1
TL082IPWR	TSSOP	PW	8	2000	330.0	12.4	7.0	3.6	1.6	8.0	12.0	Q1
TL082IPWR	TSSOP	PW	8	2000	330.0	12.4	7.0	3.6	1.6	8.0	12.0	Q1
TL084ACDR	SOIC	D	14	2500	330.0	16.4	6.5	9.0	2.1	8.0	16.0	Q1
TL084ACNSR	SO	NS	14	2000	330.0	16.4	8.2	10.5	2.5	12.0	16.0	Q1
TL084BCDR	SOIC	D	14	2500	330.0	16.4	6.5	9.0	2.1	8.0	16.0	Q1
TL084CDR	SOIC	D	14	2500	330.0	16.4	6.5	9.0	2.1	8.0	16.0	Q1
TL084CDR	SOIC	D	14	2500	330.0	16.4	6.5	9.0	2.1	8.0	16.0	Q1
TL084CDR	SOIC	D	14	2500	330.0	16.4	6.5	9.0	2.1	8.0	16.0	Q1
TL084CNSR	SO	NS	14	2000	330.0	16.4	8.2	10.5	2.5	12.0	16.0	Q1
TL084CPWR	TSSOP	PW	14	2000	330.0	12.4	6.9	5.6	1.6	8.0	12.0	Q1
TL084CPWR	TSSOP	PW	14	2000	330.0	12.4	6.9	5.6	1.6	8.0	12.0	Q1
TL084HIDR	SOIC	D	14	2500	330.0	16.4	6.5	9.0	2.1	8.0	16.0	Q1
TL084HIDYYR	SOT-23-THIN	DYY	14	3000	330.0	12.4	4.8	3.6	1.6	8.0	12.0	Q3
TL084HIPWR	TSSOP	PW	14	2000	330.0	12.4	6.9	5.6	1.6	8.0	12.0	Q1
TL084IDR	SOIC	D	14	2500	330.0	16.4	6.5	9.0	2.1	8.0	16.0	Q1
TL084IDR	SOIC	D	14	2500	330.0	16.4	6.5	9.0	2.1	8.0	16.0	Q1
TL084QDR	SOIC	D	14	2500	330.0	16.4	6.5	9.0	2.1	8.0	16.0	Q1
TL084QDRG4	SOIC	D	14	2500	330.0	16.4	6.5	9.0	2.1	8.0	16.0	Q1
TL084QDRG4	SOIC	D	14	2500	330.0	16.4	6.5	9.0	2.1	8.0	16.0	Q1

TAPE AND REEL BOX DIMENSIONS

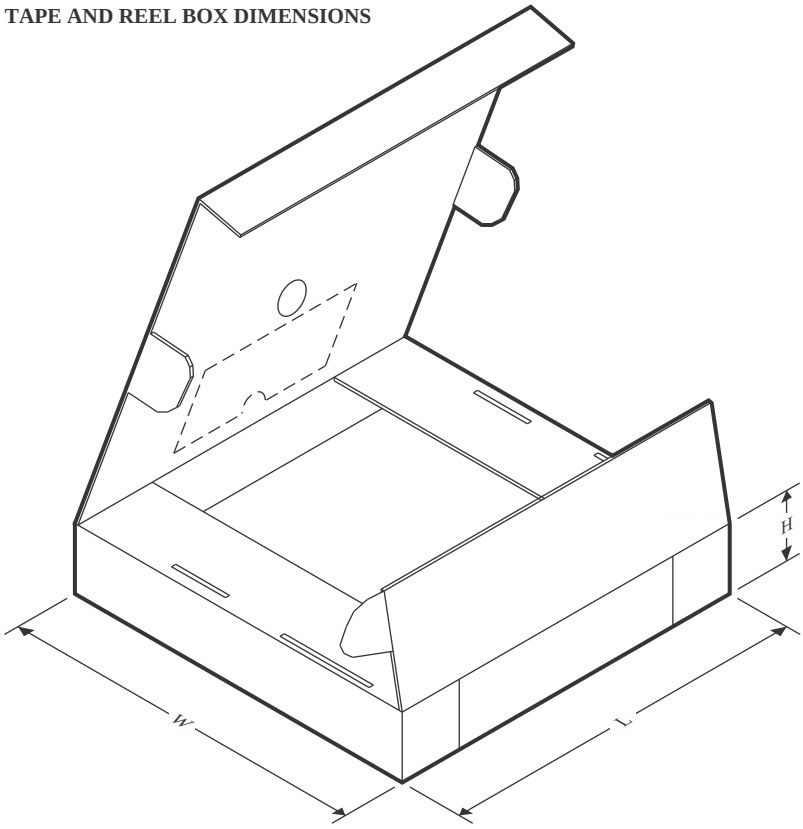

*All dimensions are nominal

Device	Package Type	Package Drawing	Pins	SPQ	Length (mm)	Width (mm)	Height (mm)
TL081ACDR	SOIC	D	8	2500	356.0	356.0	35.0
TL081ACDR	SOIC	D	8	2500	340.5	338.1	20.6
TL081BCDR	SOIC	D	8	2500	353.0	353.0	32.0
TL081BCDR	SOIC	D	8	2500	356.0	356.0	35.0
TL081CDR	SOIC	D	8	2500	356.0	356.0	35.0
TL081CDR	SOIC	D	8	2500	340.5	338.1	20.6
TL081CPSR	SO	PS	8	2000	356.0	356.0	35.0
TL081HIDBVR	SOT-23	DBV	5	3000	210.0	185.0	35.0
TL081HIDCKR	SC70	DCK	5	3000	190.0	190.0	30.0
TL081HIDR	SOIC	D	8	3000	356.0	356.0	35.0
TL081IDR	SOIC	D	8	2500	356.0	356.0	35.0
TL081IDR	SOIC	D	8	2500	353.0	353.0	32.0
TL082ACDR	SOIC	D	8	2500	356.0	356.0	35.0
TL082ACDR	SOIC	D	8	2500	356.0	356.0	35.0
TL082ACPSR	SO	PS	8	2000	356.0	356.0	35.0
TL082BCDR	SOIC	D	8	2500	356.0	356.0	35.0
TL082CDR	SOIC	D	8	2500	356.0	356.0	35.0
TL082CDR	SOIC	D	8	2500	356.0	356.0	35.0

Device	Package Type	Package Drawing	Pins	SPQ	Length (mm)	Width (mm)	Height (mm)
TL082CPSR	SO	PS	8	2000	356.0	356.0	35.0
TL082CPWR	TSSOP	PW	8	2000	356.0	356.0	35.0
TL082CPWR	TSSOP	PW	8	2000	356.0	356.0	35.0
TL082HIDDFR	SOT-23-THIN	DDF	8	3000	210.0	185.0	35.0
TL082HIDR	SOIC	D	8	3000	356.0	356.0	35.0
TL082HIPWR	TSSOP	PW	8	3000	356.0	356.0	35.0
TL082IDR	SOIC	D	8	2500	356.0	356.0	35.0
TL082IDR	SOIC	D	8	2500	353.0	353.0	32.0
TL082IDR	SOIC	D	8	2500	356.0	356.0	35.0
TL082IPWR	TSSOP	PW	8	2000	356.0	356.0	35.0
TL082IPWR	TSSOP	PW	8	2000	356.0	356.0	35.0
TL084ACDR	SOIC	D	14	2500	353.0	353.0	32.0
TL084ACNSR	SO	NS	14	2000	356.0	356.0	35.0
TL084BCDR	SOIC	D	14	2500	356.0	356.0	35.0
TL084CDR	SOIC	D	14	2500	356.0	356.0	35.0
TL084CDR	SOIC	D	14	2500	356.0	356.0	35.0
TL084CDR	SOIC	D	14	2500	353.0	353.0	32.0
TL084CNSR	SO	NS	14	2000	356.0	356.0	35.0
TL084CPWR	TSSOP	PW	14	2000	356.0	356.0	35.0
TL084CPWR	TSSOP	PW	14	2000	356.0	356.0	35.0
TL084HIDR	SOIC	D	14	2500	356.0	356.0	35.0
TL084HIDYYR	SOT-23-THIN	DYY	14	3000	336.6	336.6	31.8
TL084HIPWR	TSSOP	PW	14	2000	356.0	356.0	35.0
TL084IDR	SOIC	D	14	2500	353.0	353.0	32.0
TL084IDR	SOIC	D	14	2500	356.0	356.0	35.0
TL084QDR	SOIC	D	14	2500	356.0	356.0	35.0
TL084QDRG4	SOIC	D	14	2500	350.0	350.0	43.0
TL084QDRG4	SOIC	D	14	2500	356.0	356.0	35.0

TUBE

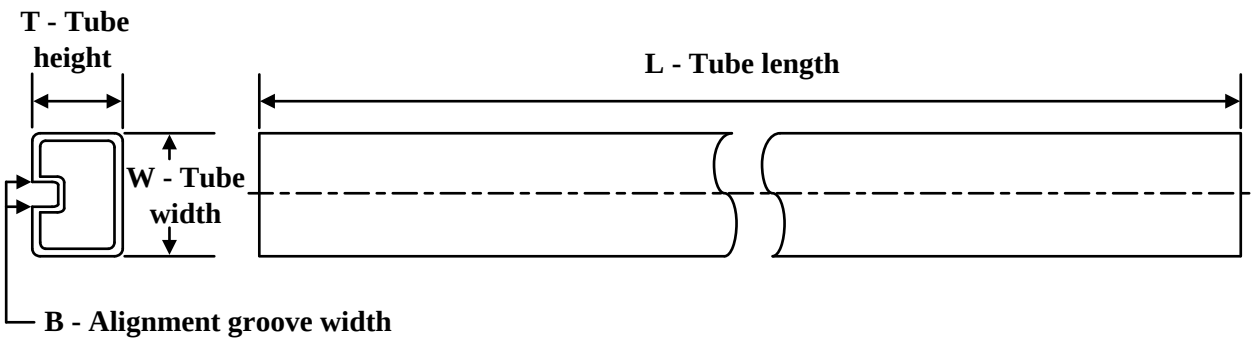

*All dimensions are nominal

Device	Package Name	Package Type	Pins	SPQ	L (mm)	W (mm)	T (µm)	B (mm)
5962-9851501Q2A	FK	LCCC	20	55	506.98	12.06	2030	NA
5962-9851503Q2A	FK	LCCC	20	55	506.98	12.06	2030	NA
TL081ACP	P	PDIP	8	50	506	13.97	11230	4.32
TL081BCP	P	PDIP	8	50	506	13.97	11230	4.32
TL081CP	P	PDIP	8	50	506	13.97	11230	4.32
TL081IP	P	PDIP	8	50	506	13.97	11230	4.32
TL082ACP	P	PDIP	8	50	506	13.97	11230	4.32
TL082BCP	P	PDIP	8	50	506	13.97	11230	4.32
TL082CP	P	PDIP	8	50	506	13.97	11230	4.32
TL082IP	P	PDIP	8	50	506	13.97	11230	4.32
TL082MFKB	FK	LCCC	20	55	506.98	12.06	2030	NA
TL084ACN	N	PDIP	14	25	506	13.97	11230	4.32
TL084ACN	N	PDIP	14	25	506	13.97	11230	4.32
TL084BCN	N	PDIP	14	25	506	13.97	11230	4.32
TL084BCN	N	PDIP	14	25	506	13.97	11230	4.32
TL084CN	N	PDIP	14	25	506	13.97	11230	4.32
TL084CN	N	PDIP	14	25	506	13.97	11230	4.32
TL084IN	N	PDIP	14	25	506	13.97	11230	4.32
TL084IN	N	PDIP	14	25	506	13.97	11230	4.32
TL084MFK	FK	LCCC	20	55	506.98	12.06	2030	NA
TL084MFKB	FK	LCCC	20	55	506.98	12.06	2030	NA