TAPE AND REEL INFORMATION

REEL DIMENSIONS

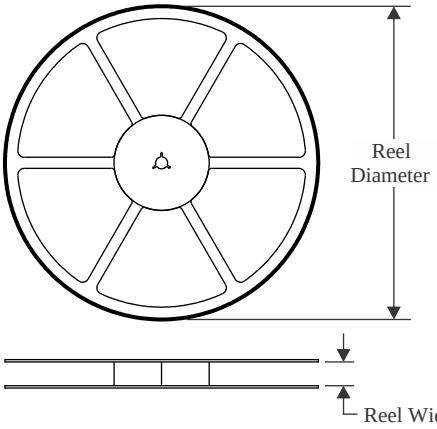

TAPE DIMENSIONS

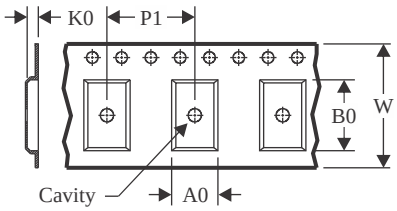

A0	Dimension designed to accommodate the component width
B0	Dimension designed to accommodate the component length
K0	Dimension designed to accommodate the component thickness
W	Overall width of the carrier tape
P1	Pitch between successive cavity centers

QUADRANT ASSIGNMENTS FOR PIN 1 ORIENTATION IN TAPE

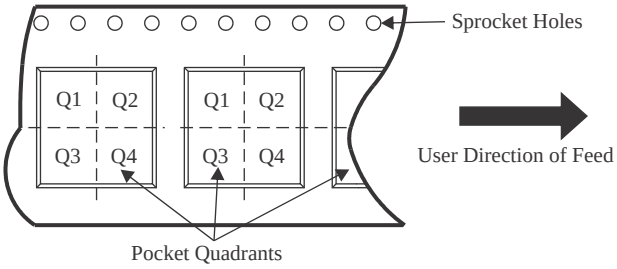

*All dimensions are nominal

Device	Package Type	Package Drawing	Pins	SPQ	Reel Diameter (mm)	Reel Width W1 (mm)	A0 (mm)	B0 (mm)	K0 (mm)	P1 (mm)	W (mm)	Pin1 Quadrant
THVD1510DGKR	VSSOP	DGK	8	2500	330.0	12.4	5.3	3.4	1.4	8.0	12.0	Q1
THVD1510DGKR	VSSOP	DGK	8	2500	330.0	12.4	5.3	3.4	1.4	8.0	12.0	Q1
THVD1510DR	SOIC	D	8	2500	330.0	12.4	6.4	5.2	2.1	8.0	12.0	Q1
THVD1512DGSR	VSSOP	DGS	10	2500	330.0	12.4	5.3	3.4	1.4	8.0	12.0	Q1
THVD1550DGKR	VSSOP	DGK	8	2500	330.0	12.4	5.3	3.4	1.4	8.0	12.0	Q1
THVD1550DR	SOIC	D	8	2500	330.0	12.4	6.4	5.2	2.1	8.0	12.0	Q1
THVD1551DGKR	VSSOP	DGK	8	2500	330.0	12.4	5.3	3.4	1.4	8.0	12.0	Q1
THVD1552DGSR	VSSOP	DGS	10	2500	330.0	12.4	5.3	3.4	1.4	8.0	12.0	Q1
THVD1552DR	SOIC	D	14	2500	330.0	16.4	6.5	9.0	2.1	8.0	16.0	Q1

TAPE AND REEL BOX DIMENSIONS

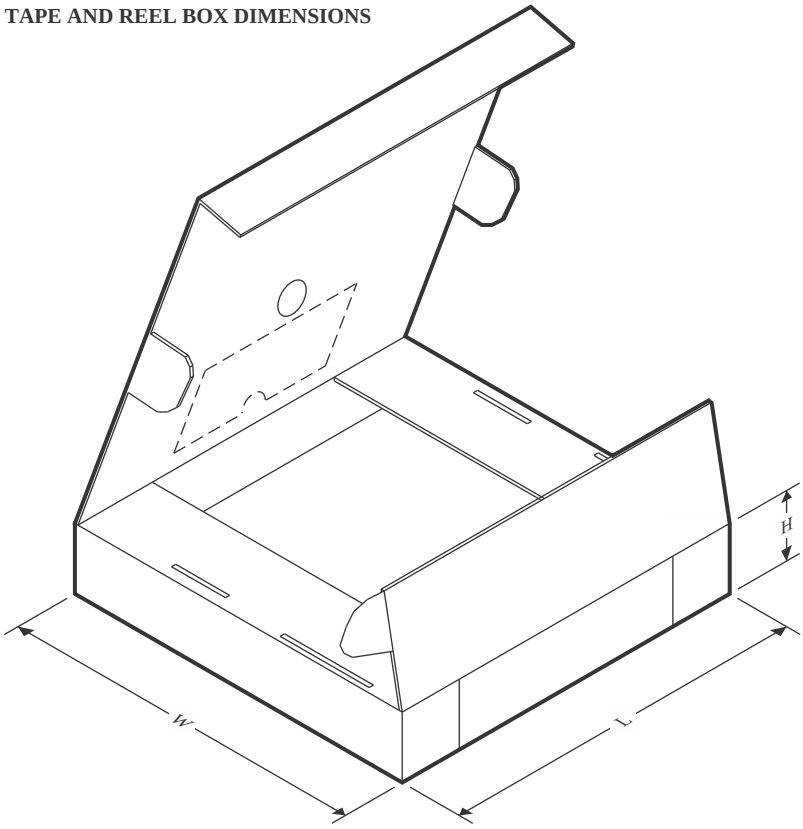

*All dimensions are nominal

Device	Package Type	Package Drawing	Pins	SPQ	Length (mm)	Width (mm)	Height (mm)
THVD1510DGKR	VSSOP	DGK	8	2500	364.0	364.0	27.0
THVD1510DGKR	VSSOP	DGK	8	2500	366.0	364.0	50.0
THVD1510DR	SOIC	D	8	2500	353.0	353.0	32.0
THVD1512DGSR	VSSOP	DGS	10	2500	366.0	364.0	50.0
THVD1550DGKR	VSSOP	DGK	8	2500	364.0	364.0	27.0
THVD1550DR	SOIC	D	8	2500	353.0	353.0	32.0
THVD1551DGKR	VSSOP	DGK	8	2500	364.0	364.0	27.0
THVD1552DGSR	VSSOP	DGS	10	2500	366.0	364.0	50.0
THVD1552DR	SOIC	D	14	2500	353.0	353.0	32.0

TUBE

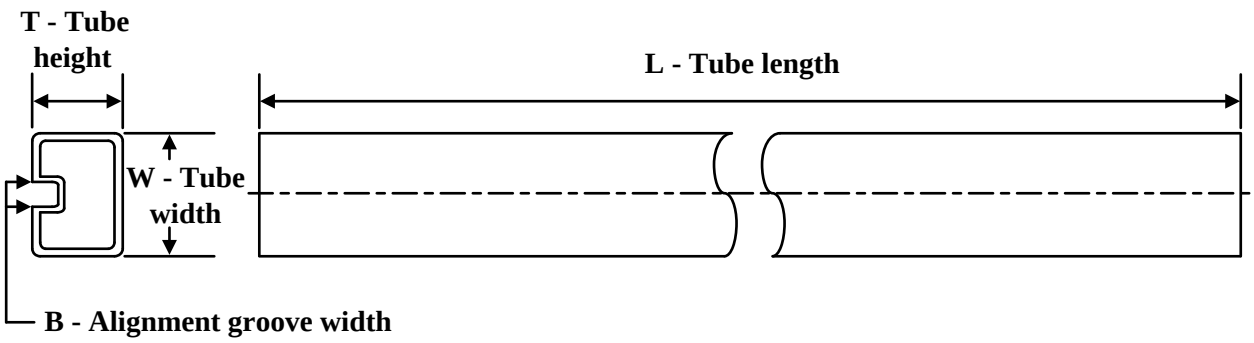

*All dimensions are nominal

Device	Package Name	Package Type	Pins	SPQ	L (mm)	W (mm)	T (µm)	B (mm)
THVD1510D	D	SOIC	8	75	507	8	3940	4.32
THVD1510DGK	DGK	VSSOP	8	80	330	6.55	500	2.88
THVD1512DGS	DGS	VSSOP	10	80	330	6.55	500	2.88
THVD1550D	D	SOIC	8	75	507	8	3940	4.32
THVD1550DGK	DGK	VSSOP	8	80	330	6.55	500	2.88
THVD1551DGK	DGK	VSSOP	8	80	274	6.55	500	2.88
THVD1552D	D	SOIC	14	50	507	8	3940	4.32
THVD1552DGS	DGS	VSSOP	10	80	330	6.55	500	2.88