TAPE AND REEL INFORMATION

REEL DIMENSIONS

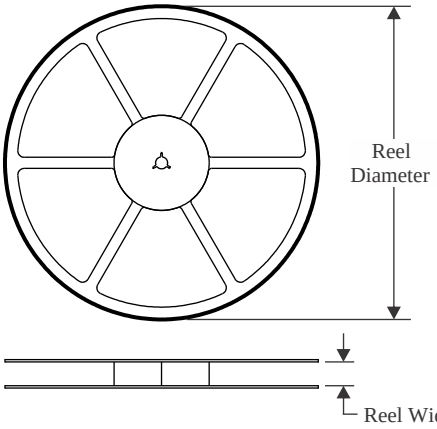

TAPE DIMENSIONS

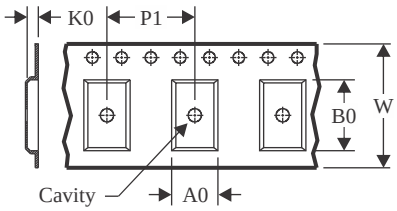

A0	Dimension designed to accommodate the component width
B0	Dimension designed to accommodate the component length
K0	Dimension designed to accommodate the component thickness
W	Overall width of the carrier tape
P1	Pitch between successive cavity centers

QUADRANT ASSIGNMENTS FOR PIN 1 ORIENTATION IN TAPE

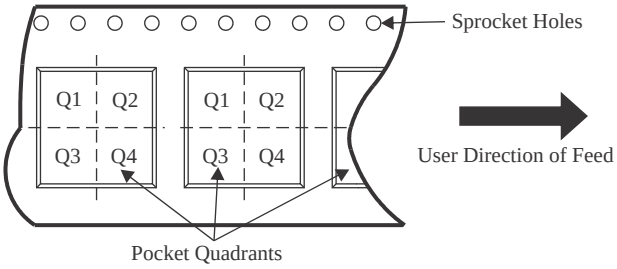

*All dimensions are nominal

Device	Package Type	Package Drawing	Pins	SPQ	Reel Diameter (mm)	Reel Width W1 (mm)	A0 (mm)	B0 (mm)	K0 (mm)	P1 (mm)	W (mm)	Pin1 Quadrant
TCAN1043DMTRQ1	VSON	DMT	14	3000	330.0	12.4	3.3	4.8	1.2	8.0	12.0	Q1
TCAN1043DMTTQ1	VSON	DMT	14	250	180.0	12.4	3.3	4.8	1.2	8.0	12.0	Q1
TCAN1043DRQ1	SOIC	D	14	2500	330.0	16.4	6.5	9.0	2.1	8.0	16.0	Q1
TCAN1043GDMTRQ1	VSON	DMT	14	3000	330.0	12.4	3.3	4.8	1.2	8.0	12.0	Q1
TCAN1043GDMTTQ1	VSON	DMT	14	250	180.0	12.4	3.3	4.8	1.2	8.0	12.0	Q1
TCAN1043GDRQ1	SOIC	D	14	2500	330.0	16.4	6.5	9.0	2.1	8.0	16.0	Q1
TCAN1043HDMTRQ1	VSON	DMT	14	3000	330.0	12.4	3.3	4.8	1.2	8.0	12.0	Q1
TCAN1043HDMTTQ1	VSON	DMT	14	250	180.0	12.4	3.3	4.8	1.2	8.0	12.0	Q1
TCAN1043HDRQ1	SOIC	D	14	2500	330.0	16.4	6.5	9.0	2.1	8.0	16.0	Q1
TCAN1043HGDMTRQ1	VSON	DMT	14	3000	330.0	12.4	3.3	4.8	1.2	8.0	12.0	Q1
TCAN1043HGDMTTQ1	VSON	DMT	14	250	180.0	12.4	3.3	4.8	1.2	8.0	12.0	Q1
TCAN1043HGDRQ1	SOIC	D	14	2500	330.0	16.4	6.5	9.0	2.1	8.0	16.0	Q1
TCAN1043HGDRQ1	SOIC	D	14	2500	330.0	16.4	6.5	9.0	2.1	8.0	16.0	Q1

TAPE AND REEL BOX DIMENSIONS

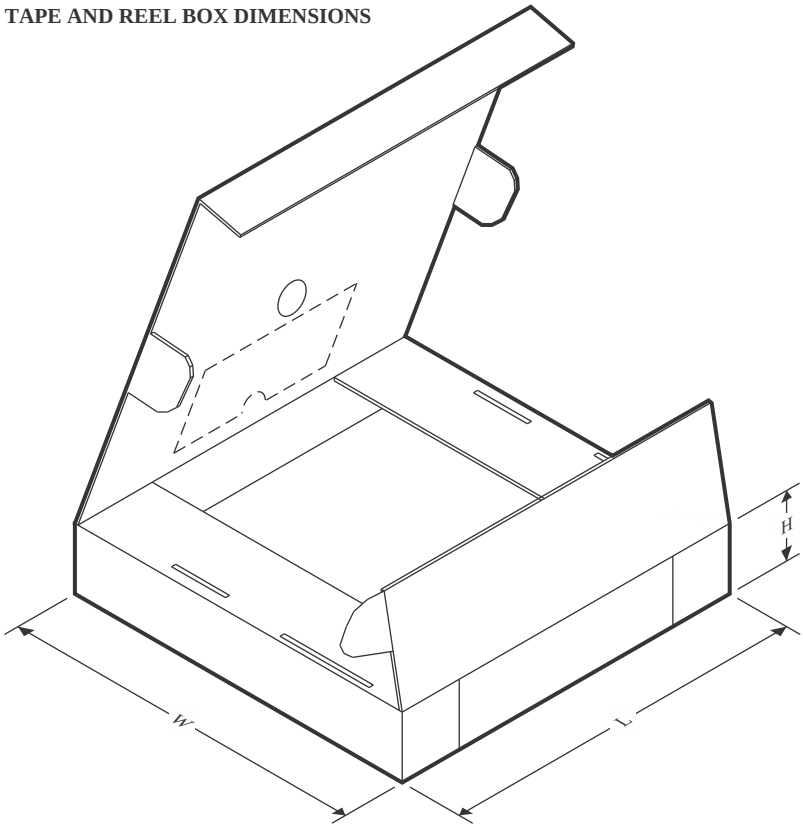

*All dimensions are nominal

Device	Package Type	Package Drawing	Pins	SPQ	Length (mm)	Width (mm)	Height (mm)
TCAN1043DMTRQ1	VSON	DMT	14	3000	367.0	367.0	35.0
TCAN1043DMTTQ1	VSON	DMT	14	250	210.0	185.0	35.0
TCAN1043DRQ1	SOIC	D	14	2500	353.0	353.0	32.0
TCAN1043GDMTRQ1	VSON	DMT	14	3000	367.0	367.0	35.0
TCAN1043GDMTTQ1	VSON	DMT	14	250	210.0	185.0	35.0
TCAN1043GDRQ1	SOIC	D	14	2500	353.0	353.0	32.0
TCAN1043HDMTRQ1	VSON	DMT	14	3000	367.0	367.0	35.0
TCAN1043HDMTTQ1	VSON	DMT	14	250	210.0	185.0	35.0
TCAN1043HDRQ1	SOIC	D	14	2500	353.0	353.0	32.0
TCAN1043HGDMTRQ1	VSON	DMT	14	3000	367.0	367.0	35.0
TCAN1043HGDMTTQ1	VSON	DMT	14	250	210.0	185.0	35.0
TCAN1043HGDRQ1	SOIC	D	14	2500	356.0	356.0	35.0
TCAN1043HGDRQ1	SOIC	D	14	2500	353.0	353.0	32.0

TUBE

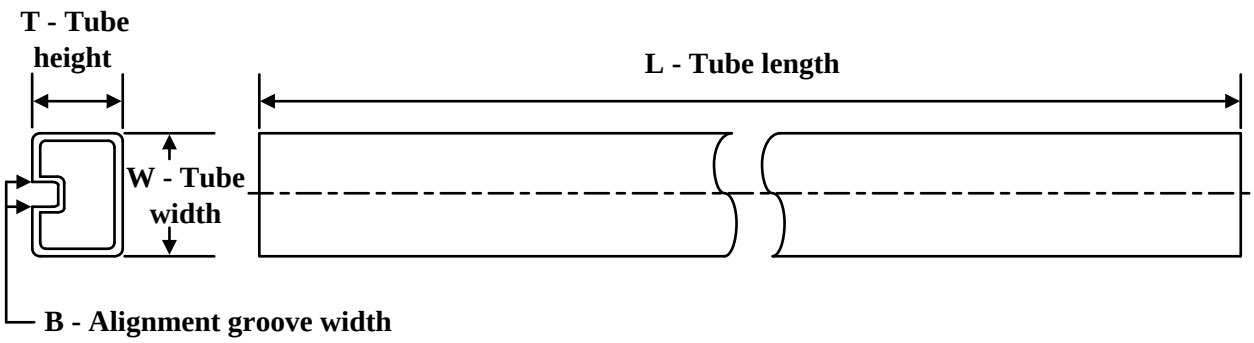

*All dimensions are nominal

Device	Package Name	Package Type	Pins	SPQ	L (mm)	W (mm)	T (µm)	B (mm)
TCAN1043DQ1	D	SOIC	14	50	507	8	3940	4.32
TCAN1043GDQ1	D	SOIC	14	50	507	8	3940	4.32
TCAN1043HDQ1	D	SOIC	14	50	507	8	3940	4.32
TCAN1043HGDQ1	D	SOIC	14	50	507	8	3940	4.32