TAPE AND REEL INFORMATION

REEL DIMENSIONS

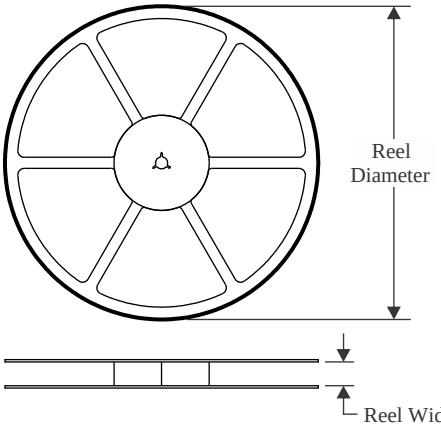

TAPE DIMENSIONS

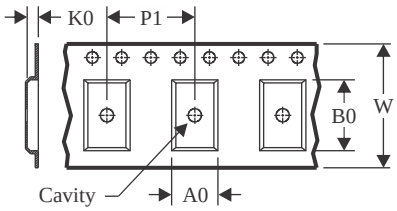

A0	Dimension designed to accommodate the component width
B0	Dimension designed to accommodate the component length
K0	Dimension designed to accommodate the component thickness
W	Overall width of the carrier tape
P1	Pitch between successive cavity centers

QUADRANT ASSIGNMENTS FOR PIN 1 ORIENTATION IN TAPE

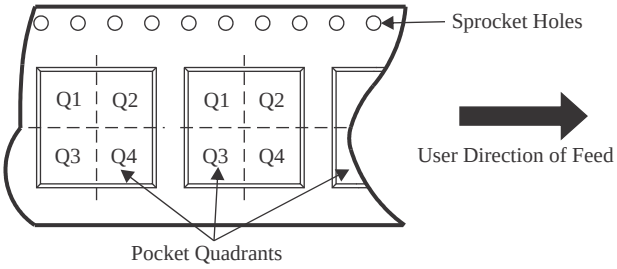

*All dimensions are nominal

Device	Package Type	Package Drawing	Pins	SPQ	Reel Diameter (mm)	Reel Width W1 (mm)	A0 (mm)	B0 (mm)	K0 (mm)	P1 (mm)	W (mm)	Pin1 Quadrant
MSP430FR59471IRHAR	VQFN	RHA	40	2500	330.0	16.4	6.3	6.3	1.1	12.0	16.0	Q2
MSP430FR59471IRHAT	VQFN	RHA	40	250	180.0	16.4	6.3	6.3	1.1	12.0	16.0	Q2
MSP430FR5947IDAR	TSSOP	DA	38	2000	330.0	24.4	8.6	13.0	1.8	12.0	24.0	Q1
MSP430FR5947IRHAR	VQFN	RHA	40	2500	330.0	16.4	6.3	6.3	1.1	12.0	16.0	Q2
MSP430FR5947IRHAT	VQFN	RHA	40	250	180.0	16.4	6.3	6.3	1.1	12.0	16.0	Q2
MSP430FR5948IDAR	TSSOP	DA	38	2000	330.0	24.4	8.6	13.0	1.8	12.0	24.0	Q1
MSP430FR5948IRHAR	VQFN	RHA	40	2500	330.0	16.4	6.3	6.3	1.1	12.0	16.0	Q2
MSP430FR5948IRHAT	VQFN	RHA	40	250	180.0	16.4	6.3	6.3	1.1	12.0	16.0	Q2
MSP430FR5949IDAR	TSSOP	DA	38	2000	330.0	24.4	8.6	13.0	1.8	12.0	24.0	Q1
MSP430FR5949IRHAR	VQFN	RHA	40	2500	330.0	16.4	6.3	6.3	1.1	12.0	16.0	Q2
MSP430FR5949IRHAT	VQFN	RHA	40	250	180.0	16.4	6.3	6.3	1.1	12.0	16.0	Q2
MSP430FR5957IDAR	TSSOP	DA	38	2000	330.0	24.4	8.6	13.0	1.8	12.0	24.0	Q1
MSP430FR5957IRHAR	VQFN	RHA	40	2500	330.0	16.4	6.3	6.3	1.1	12.0	16.0	Q2
MSP430FR5957IRHAT	VQFN	RHA	40	250	180.0	16.4	6.3	6.3	1.1	12.0	16.0	Q2
MSP430FR5958IDAR	TSSOP	DA	38	2000	330.0	24.4	8.6	13.0	1.8	12.0	24.0	Q1
MSP430FR5958IRHAR	VQFN	RHA	40	2500	330.0	16.4	6.3	6.3	1.1	12.0	16.0	Q2

Device	Package Type	Package Drawing	Pins	SPQ	Reel Diameter (mm)	Reel Width W1 (mm)	A0 (mm)	B0 (mm)	K0 (mm)	P1 (mm)	W (mm)	Pin1 Quadrant
MSP430FR5958IRHAT	VQFN	RHA	40	250	180.0	16.4	6.3	6.3	1.1	12.0	16.0	Q2
MSP430FR5959IDAR	TSSOP	DA	38	2000	330.0	24.4	8.6	13.0	1.8	12.0	24.0	Q1
MSP430FR5959IRHAR	VQFN	RHA	40	2500	330.0	16.4	6.3	6.3	1.1	12.0	16.0	Q2
MSP430FR5959IRHAT	VQFN	RHA	40	250	180.0	16.4	6.3	6.3	1.1	12.0	16.0	Q2
MSP430FR5967IRGZR	VQFN	RGZ	48	2500	330.0	16.4	7.3	7.3	1.1	12.0	16.0	Q2
MSP430FR5967IRGZT	VQFN	RGZ	48	250	180.0	16.4	7.3	7.3	1.1	12.0	16.0	Q2
MSP430FR5968IRGZR	VQFN	RGZ	48	2500	330.0	16.4	7.3	7.3	1.1	12.0	16.0	Q2
MSP430FR5968IRGZT	VQFN	RGZ	48	250	180.0	16.4	7.3	7.3	1.1	12.0	16.0	Q2
MSP430FR59691IRGZR	VQFN	RGZ	48	2500	330.0	16.4	7.3	7.3	1.1	12.0	16.0	Q2
MSP430FR59691IRGZT	VQFN	RGZ	48	250	180.0	16.4	7.3	7.3	1.1	12.0	16.0	Q2
MSP430FR5969IRGZR	VQFN	RGZ	48	2500	330.0	16.4	7.3	7.3	1.1	12.0	16.0	Q2
MSP430FR5969IRGZT	VQFN	RGZ	48	250	180.0	16.4	7.3	7.3	1.1	12.0	16.0	Q2

TAPE AND REEL BOX DIMENSIONS

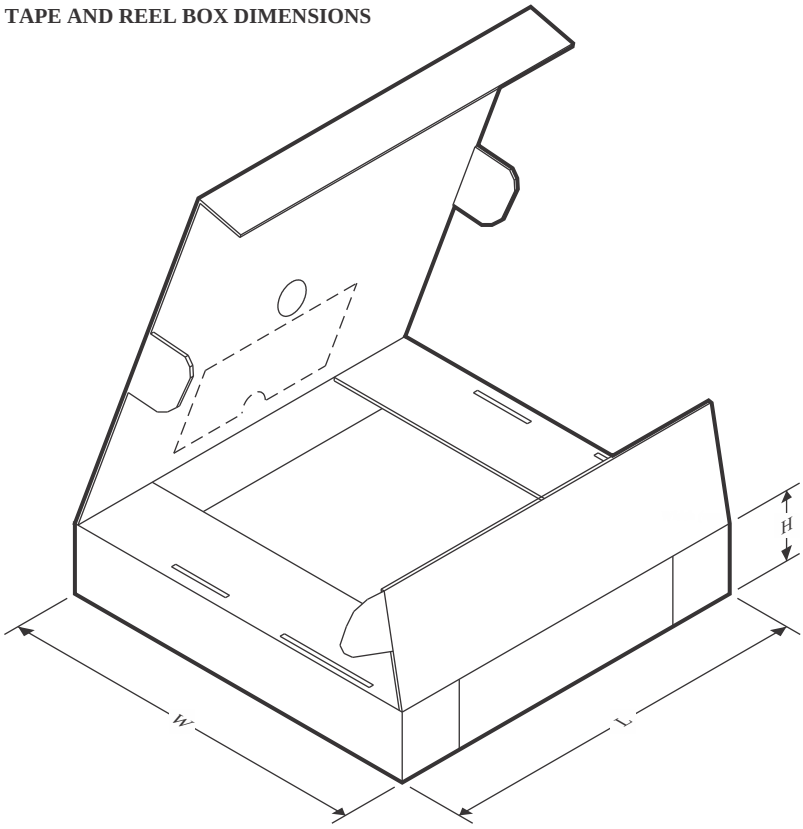

*All dimensions are nominal

Device	Package Type	Package Drawing	Pins	SPQ	Length (mm)	Width (mm)	Height (mm)
MSP430FR59471IRHAR	VQFN	RHA	40	2500	367.0	367.0	38.0
MSP430FR59471IRHAT	VQFN	RHA	40	250	210.0	185.0	35.0
MSP430FR5947IDAR	TSSOP	DA	38	2000	350.0	350.0	43.0
MSP430FR5947IRHAR	VQFN	RHA	40	2500	367.0	367.0	38.0
MSP430FR5947IRHAT	VQFN	RHA	40	250	210.0	185.0	35.0
MSP430FR5948IDAR	TSSOP	DA	38	2000	350.0	350.0	43.0
MSP430FR5948IRHAR	VQFN	RHA	40	2500	367.0	367.0	38.0
MSP430FR5948IRHAT	VQFN	RHA	40	250	210.0	185.0	35.0
MSP430FR5949IDAR	TSSOP	DA	38	2000	350.0	350.0	43.0
MSP430FR5949IRHAR	VQFN	RHA	40	2500	367.0	367.0	38.0
MSP430FR5949IRHAT	VQFN	RHA	40	250	210.0	185.0	35.0
MSP430FR5957IDAR	TSSOP	DA	38	2000	350.0	350.0	43.0
MSP430FR5957IRHAR	VQFN	RHA	40	2500	367.0	367.0	38.0
MSP430FR5957IRHAT	VQFN	RHA	40	250	210.0	185.0	35.0
MSP430FR5958IDAR	TSSOP	DA	38	2000	350.0	350.0	43.0
MSP430FR5958IRHAR	VQFN	RHA	40	2500	367.0	367.0	38.0
MSP430FR5958IRHAT	VQFN	RHA	40	250	210.0	185.0	35.0
MSP430FR5959IDAR	TSSOP	DA	38	2000	350.0	350.0	43.0

Device	Package Type	Package Drawing	Pins	SPQ	Length (mm)	Width (mm)	Height (mm)
MSP430FR5959IRHAR	VQFN	RHA	40	2500	367.0	367.0	38.0
MSP430FR5959IRHAT	VQFN	RHA	40	250	210.0	185.0	35.0
MSP430FR5967IRGZR	VQFN	RGZ	48	2500	367.0	367.0	38.0
MSP430FR5967IRGZT	VQFN	RGZ	48	250	210.0	185.0	35.0
MSP430FR5968IRGZR	VQFN	RGZ	48	2500	367.0	367.0	38.0
MSP430FR5968IRGZT	VQFN	RGZ	48	250	210.0	185.0	35.0
MSP430FR59691IRGZR	VQFN	RGZ	48	2500	367.0	367.0	38.0
MSP430FR59691IRGZT	VQFN	RGZ	48	250	210.0	185.0	35.0
MSP430FR5969IRGZR	VQFN	RGZ	48	2500	367.0	367.0	38.0
MSP430FR5969IRGZT	VQFN	RGZ	48	250	210.0	185.0	35.0

TUBE

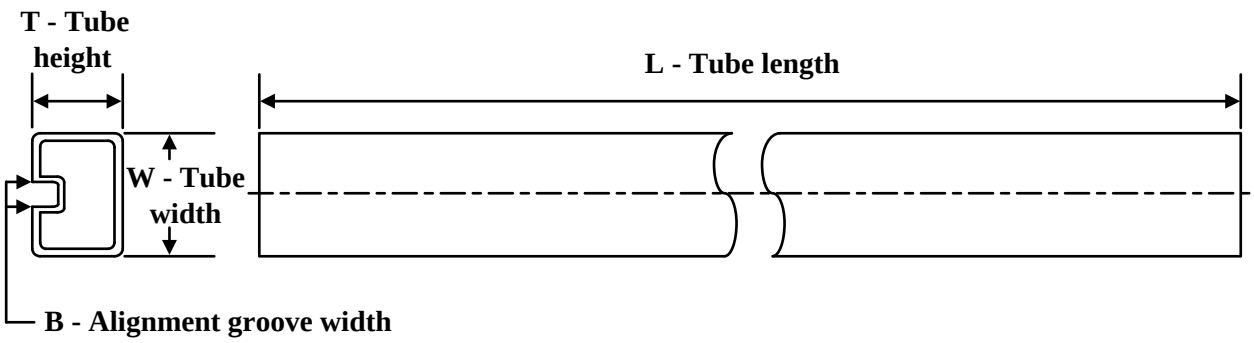

*All dimensions are nominal

Device	Package Name	Package Type	Pins	SPQ	L (mm)	W (mm)	T (µm)	B (mm)
MSP430FR5947IDA	DA	TSSOP	38	40	530	11.89	3600	4.9
MSP430FR5948IDA	DA	TSSOP	38	40	530	11.89	3600	4.9
MSP430FR5949IDA	DA	TSSOP	38	40	530	11.89	3600	4.9
MSP430FR5957IDA	DA	TSSOP	38	40	530	11.89	3600	4.9
MSP430FR5958IDA	DA	TSSOP	38	40	530	11.89	3600	4.9
MSP430FR5959IDA	DA	TSSOP	38	40	530	11.89	3600	4.9