TAPE AND REEL INFORMATION

REEL DIMENSIONS

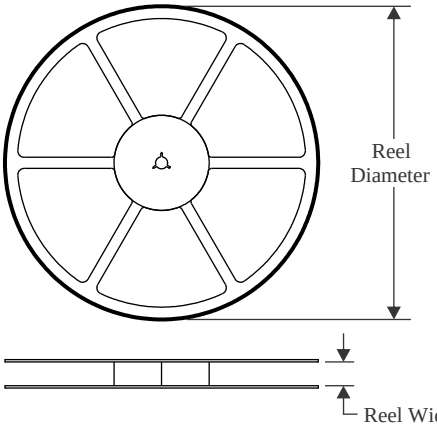

TAPE DIMENSIONS

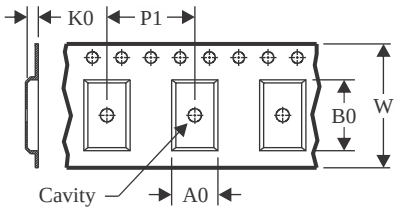

A0	Dimension designed to accommodate the component width
B0	Dimension designed to accommodate the component length
K0	Dimension designed to accommodate the component thickness
W	Overall width of the carrier tape
P1	Pitch between successive cavity centers

QUADRANT ASSIGNMENTS FOR PIN 1 ORIENTATION IN TAPE

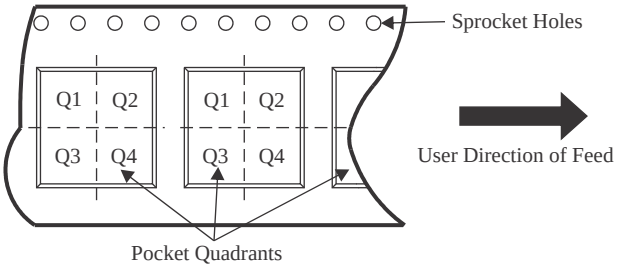

*All dimensions are nominal

Device	Package Type	Package Drawing	Pins	SPQ	Reel Diameter (mm)	Reel Width W1 (mm)	A0 (mm)	B0 (mm)	K0 (mm)	P1 (mm)	W (mm)	Pin1 Quadrant
MSP430F5513IRGCR	VQFN	RGC	64	2000	330.0	16.4	9.3	9.3	1.1	12.0	16.0	Q2
MSP430F5513IRGCR	VQFN	RGC	64	2000	330.0	16.4	9.3	9.3	1.5	12.0	16.0	Q2
MSP430F5514IRGCR	VQFN	RGC	64	2000	330.0	16.4	9.3	9.3	1.5	12.0	16.0	Q2
MSP430F5514IRGCT	VQFN	RGC	64	250	180.0	16.4	9.3	9.3	1.1	12.0	16.0	Q2
MSP430F5514IRGCT	VQFN	RGC	64	250	180.0	16.4	9.3	9.3	1.5	12.0	16.0	Q2
MSP430F5515IPNR	LQFP	PN	80	1000	330.0	24.4	15.0	15.0	2.1	20.0	24.0	Q2
MSP430F5517IPNR	LQFP	PN	80	1000	330.0	24.4	15.0	15.0	2.1	20.0	24.0	Q2
MSP430F5519IPNR	LQFP	PN	80	1000	330.0	24.4	15.0	15.0	2.1	20.0	24.0	Q2
MSP430F5521IPNR	LQFP	PN	80	1000	330.0	24.4	15.0	15.0	2.1	20.0	24.0	Q2
MSP430F5522IRGCR	VQFN	RGC	64	2000	330.0	16.4	9.3	9.3	1.1	12.0	16.0	Q2
MSP430F5522IRGCR	VQFN	RGC	64	2000	330.0	16.4	9.3	9.3	1.5	12.0	16.0	Q2
MSP430F5522IRGCT	VQFN	RGC	64	250	180.0	16.4	9.3	9.3	1.5	12.0	16.0	Q2
MSP430F5522IRGCT	VQFN	RGC	64	250	180.0	16.4	9.3	9.3	1.1	12.0	16.0	Q2
MSP430F5522IZXHR	NFBGA	ZXH	80	2500	330.0	12.4	5.3	5.3	1.5	8.0	12.0	Q1
MSP430F5524IRGCR	VQFN	RGC	64	2000	330.0	16.4	9.3	9.3	1.1	12.0	16.0	Q2
MSP430F5524IRGCR	VQFN	RGC	64	2000	330.0	16.4	9.3	9.3	1.5	12.0	16.0	Q2

Device	Package Type	Package Drawing	Pins	SPQ	Reel Diameter (mm)	Reel Width W1 (mm)	A0 (mm)	B0 (mm)	K0 (mm)	P1 (mm)	W (mm)	Pin1 Quadrant
MSP430F5524IRGCT	VQFN	RGC	64	250	180.0	16.4	9.3	9.3	1.1	12.0	16.0	Q2
MSP430F5524IRGCT	VQFN	RGC	64	250	180.0	16.4	9.3	9.3	1.5	12.0	16.0	Q2
MSP430F5524IZXHR	NFBGA	ZXH	80	2500	330.0	12.4	5.3	5.3	1.5	8.0	12.0	Q1
MSP430F5525IPNR	LQFP	PN	80	1000	330.0	24.4	15.0	15.0	2.1	20.0	24.0	Q2
MSP430F5526IRGCR	VQFN	RGC	64	2000	330.0	16.4	9.3	9.3	1.5	12.0	16.0	Q2
MSP430F5526IRGCT	VQFN	RGC	64	250	180.0	16.4	9.3	9.3	1.1	12.0	16.0	Q2
MSP430F5526IRGCT	VQFN	RGC	64	250	180.0	16.4	9.3	9.3	1.5	12.0	16.0	Q2
MSP430F5527IPNR	LQFP	PN	80	1000	330.0	24.4	15.0	15.0	2.1	20.0	24.0	Q2
MSP430F5528IRGCR	VQFN	RGC	64	2000	330.0	16.4	9.3	9.3	1.5	12.0	16.0	Q2
MSP430F5528IRGCT	VQFN	RGC	64	250	180.0	16.4	9.3	9.3	1.5	12.0	16.0	Q2
MSP430F5528IYFFR	DSBGA	YFF	64	2500	330.0	12.4	3.86	3.86	0.69	8.0	12.0	Q2
MSP430F5529IPNR	LQFP	PN	80	1000	330.0	24.4	15.0	15.0	2.1	20.0	24.0	Q2

TAPE AND REEL BOX DIMENSIONS

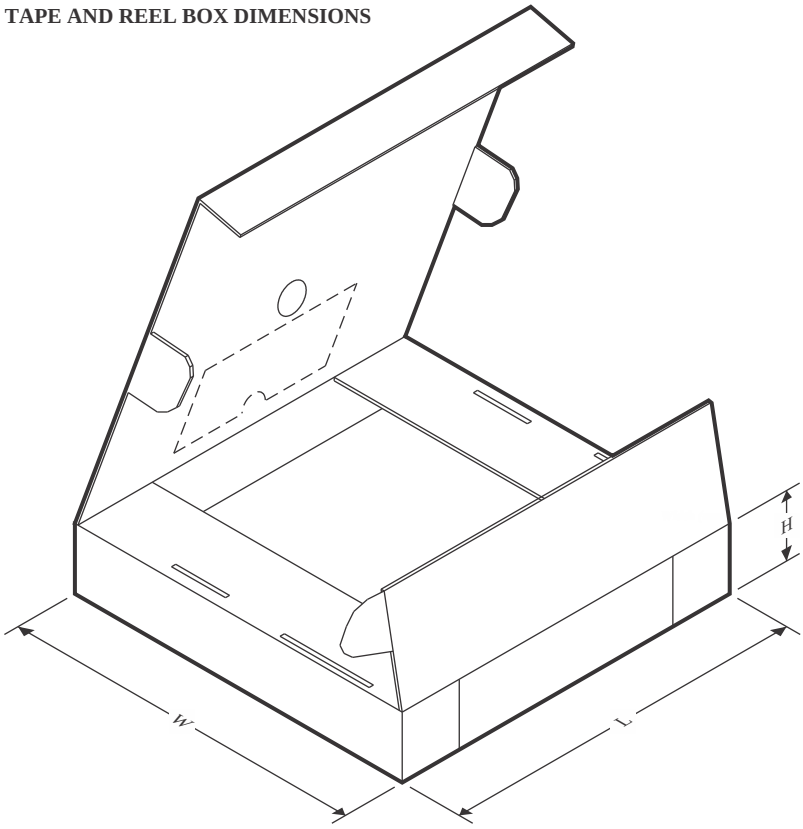

*All dimensions are nominal

Device	Package Type	Package Drawing	Pins	SPQ	Length (mm)	Width (mm)	Height (mm)
MSP430F5513IRGCR	VQFN	RGC	64	2000	367.0	367.0	38.0
MSP430F5513IRGCR	VQFN	RGC	64	2000	356.0	356.0	35.0
MSP430F5514IRGCR	VQFN	RGC	64	2000	367.0	367.0	38.0
MSP430F5514IRGCT	VQFN	RGC	64	250	213.0	191.0	35.0
MSP430F5514IRGCT	VQFN	RGC	64	250	210.0	185.0	35.0
MSP430F5515IPNR	LQFP	PN	80	1000	350.0	350.0	43.0
MSP430F5517IPNR	LQFP	PN	80	1000	350.0	350.0	43.0
MSP430F5519IPNR	LQFP	PN	80	1000	350.0	350.0	43.0
MSP430F5521IPNR	LQFP	PN	80	1000	350.0	350.0	43.0
MSP430F5522IRGCR	VQFN	RGC	64	2000	367.0	367.0	38.0
MSP430F5522IRGCR	VQFN	RGC	64	2000	367.0	367.0	38.0
MSP430F5522IRGCT	VQFN	RGC	64	250	210.0	185.0	35.0
MSP430F5522IRGCT	VQFN	RGC	64	250	213.0	191.0	35.0
MSP430F5522IZXHR	NFBGA	ZXH	80	2500	350.0	350.0	43.0
MSP430F5524IRGCR	VQFN	RGC	64	2000	367.0	367.0	38.0
MSP430F5524IRGCR	VQFN	RGC	64	2000	367.0	367.0	38.0
MSP430F5524IRGCT	VQFN	RGC	64	250	213.0	191.0	35.0
MSP430F5524IRGCT	VQFN	RGC	64	250	210.0	185.0	35.0

Device	Package Type	Package Drawing	Pins	SPQ	Length (mm)	Width (mm)	Height (mm)
MSP430F5524IZXHR	NFBGA	ZXH	80	2500	350.0	350.0	43.0
MSP430F5525IPNR	LQFP	PN	80	1000	350.0	350.0	43.0
MSP430F5526IRGCR	VQFN	RGC	64	2000	356.0	356.0	35.0
MSP430F5526IRGCT	VQFN	RGC	64	250	213.0	191.0	35.0
MSP430F5526IRGCT	VQFN	RGC	64	250	210.0	185.0	35.0
MSP430F5527IPNR	LQFP	PN	80	1000	350.0	350.0	43.0
MSP430F5528IRGCR	VQFN	RGC	64	2000	367.0	367.0	38.0
MSP430F5528IRGCT	VQFN	RGC	64	250	210.0	185.0	35.0
MSP430F5528IYFFR	DSBGA	YFF	64	2500	335.0	335.0	25.0
MSP430F5529IPNR	LQFP	PN	80	1000	350.0	350.0	43.0

TRAY

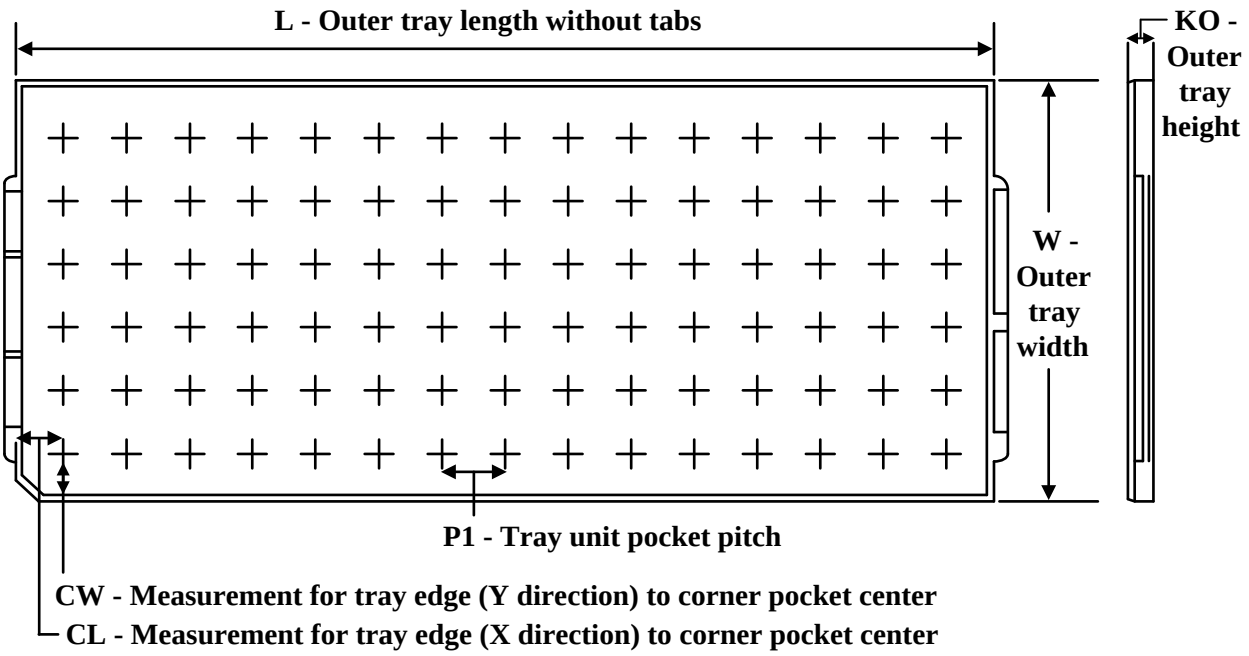

Chamfer on Tray corner indicates Pin 1 orientation of packed units.

*All dimensions are nominal

Device	Package Name	Package Type	Pins	SPQ	Unit array matrix	Max temperature (°C)	L (mm)	W (mm)	K0 (µm)	P1 (mm)	CL (mm)	CW (mm)
MSP430F5515IPN	PN	LQFP	80	119	7 x 17	150	315	135.9	7620	17.9	14.3	13.95
MSP430F5517IPN	PN	LQFP	80	119	7 x 17	150	315	135.9	7620	17.9	14.3	13.95
MSP430F5519IPN	PN	LQFP	80	119	7 x 17	150	315	135.9	7620	17.9	14.3	13.95
MSP430F5521IPN	PN	LQFP	80	119	7 x 17	150	315	135.9	7620	17.9	14.3	13.95
MSP430F5522IZXH	ZXH	NFBGA	80	576	16 x 36	150	315	135.9	7620	8.5	8.75	8.7
MSP430F5522IZXH	ZXH	NFBGA	80	576	16 x 36	150	315	135.9	7620	8.5	8.75	8.7
MSP430F5522IZXHR	ZXH	NFBGA	80	2500	16 x 36	150	315	135.9	7620	8.5	8.75	8.7
MSP430F5524IZXH	ZXH	NFBGA	80	576	16 x 36	150	315	135.9	7620	8.5	8.75	8.7
MSP430F5524IZXH	ZXH	NFBGA	80	576	16 x 36	150	315	135.9	7620	8.5	8.75	8.7
MSP430F5524IZXHR	ZXH	NFBGA	80	2500	16 x 36	150	315	135.9	7620	8.5	8.75	8.7
MSP430F5525IPN	PN	LQFP	80	119	7 x 17	150	315	135.9	7620	17.9	14.3	13.95
MSP430F5526IZXH	ZXH	NFBGA	80	576	16 x 36	150	315	135.9	7620	8.5	8.75	8.7
MSP430F5526IZXH	ZXH	NFBGA	80	576	16 x 36	150	315	135.9	7620	8.5	8.75	8.7
MSP430F5526IZXHR	ZXH	NFBGA	80	2500	16 x 36	150	315	135.9	7620	8.5	8.75	8.7
MSP430F5527IPN	PN	LQFP	80	119	7 x 17	150	315	135.9	7620	17.9	14.3	13.95
MSP430F5528IZXH	ZXH	NFBGA	80	576	16 x 36	150	315	135.9	7620	8.5	8.75	8.7
MSP430F5528IZXH	ZXH	NFBGA	80	576	16 x 36	150	315	135.9	7620	8.5	8.75	8.7

Device	Package Name	Package Type	Pins	SPQ	Unit array matrix	Max temperature (°C)	L (mm)	W (mm)	K0 (µm)	P1 (mm)	CL (mm)	CW (mm)
MSP430F5528IZXHR	ZXH	NFBGA	80	2500	16 x 36	150	315	135.9	7620	8.5	8.75	8.7
MSP430F5529IPN	PN	LQFP	80	119	7 x 17	150	315	135.9	7620	17.9	14.3	13.95