TAPE AND REEL INFORMATION

REEL DIMENSIONS

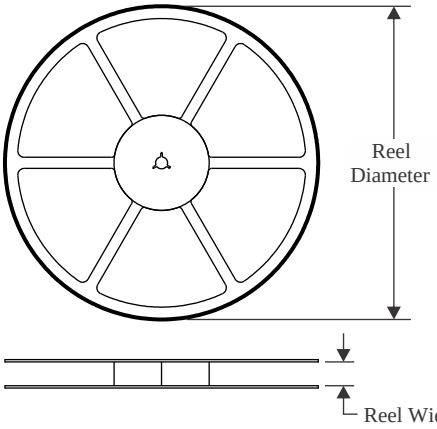

TAPE DIMENSIONS

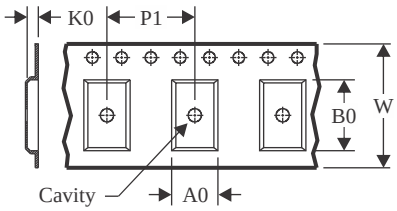

A0	Dimension designed to accommodate the component width
B0	Dimension designed to accommodate the component length
K0	Dimension designed to accommodate the component thickness
W	Overall width of the carrier tape
P1	Pitch between successive cavity centers

QUADRANT ASSIGNMENTS FOR PIN 1 ORIENTATION IN TAPE

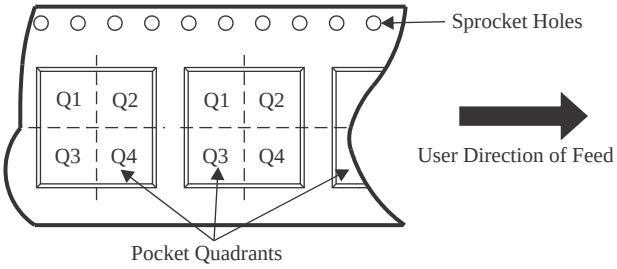

*All dimensions are nominal

Device	Package Type	Package Drawing	Pins	SPQ	Reel Diameter (mm)	Reel Width W1 (mm)	A0 (mm)	B0 (mm)	K0 (mm)	P1 (mm)	W (mm)	Pin1 Quadrant
LP5912-0.9DRVR	WSON	DRV	6	3000	180.0	8.4	2.3	2.3	1.15	4.0	8.0	Q2
LP5912-1.0DRVR	WSON	DRV	6	3000	180.0	8.4	2.3	2.3	1.15	4.0	8.0	Q2
LP5912-1.1DRVR	WSON	DRV	6	3000	180.0	8.4	2.3	2.3	1.15	4.0	8.0	Q2
LP5912-1.2DRVR	WSON	DRV	6	3000	180.0	8.4	2.3	2.3	1.15	4.0	8.0	Q2
LP5912-1.2DRVT	WSON	DRV	6	250	180.0	8.4	2.3	2.3	1.15	4.0	8.0	Q2
LP5912-1.5DRVR	WSON	DRV	6	3000	180.0	8.4	2.3	2.3	1.15	4.0	8.0	Q2
LP5912-1.8DRVR	WSON	DRV	6	3000	180.0	8.4	2.3	2.3	1.15	4.0	8.0	Q2
LP5912-2.5DRVR	WSON	DRV	6	3000	180.0	8.4	2.3	2.3	1.15	4.0	8.0	Q2
LP5912-2.8DRVR	WSON	DRV	6	3000	180.0	8.4	2.3	2.3	1.15	4.0	8.0	Q2
LP5912-3.0DRVR	WSON	DRV	6	3000	180.0	8.4	2.3	2.3	1.15	4.0	8.0	Q2
LP5912-3.3DRVR	WSON	DRV	6	3000	180.0	8.4	2.3	2.3	1.15	4.0	8.0	Q2
LP5912-3.3DRVT	WSON	DRV	6	250	180.0	8.4	2.3	2.3	1.15	4.0	8.0	Q2
LP5912-5.0DRVR	WSON	DRV	6	3000	180.0	8.4	2.3	2.3	1.15	4.0	8.0	Q2

TAPE AND REEL BOX DIMENSIONS

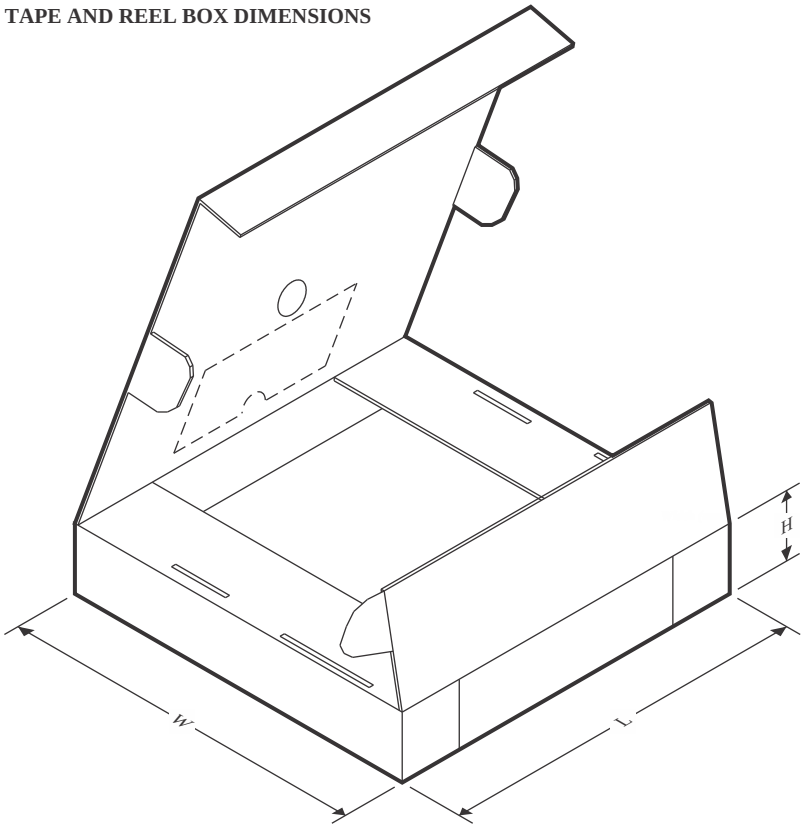

*All dimensions are nominal

Device	Package Type	Package Drawing	Pins	SPQ	Length (mm)	Width (mm)	Height (mm)
LP5912-0.9DRVR	WSON	DRV	6	3000	182.0	182.0	20.0
LP5912-1.0DRVR	WSON	DRV	6	3000	210.0	185.0	35.0
LP5912-1.1DRVR	WSON	DRV	6	3000	182.0	182.0	20.0
LP5912-1.2DRVR	WSON	DRV	6	3000	182.0	182.0	20.0
LP5912-1.2DRVT	WSON	DRV	6	250	182.0	182.0	20.0
LP5912-1.5DRVR	WSON	DRV	6	3000	182.0	182.0	20.0
LP5912-1.8DRVR	WSON	DRV	6	3000	182.0	182.0	20.0
LP5912-2.5DRVR	WSON	DRV	6	3000	210.0	185.0	35.0
LP5912-2.8DRVR	WSON	DRV	6	3000	182.0	182.0	20.0
LP5912-3.0DRVR	WSON	DRV	6	3000	182.0	182.0	20.0
LP5912-3.3DRVR	WSON	DRV	6	3000	182.0	182.0	20.0
LP5912-3.3DRVT	WSON	DRV	6	250	182.0	182.0	20.0
LP5912-5.0DRVR	WSON	DRV	6	3000	210.0	185.0	35.0