TAPE AND REEL INFORMATION

REEL DIMENSIONS

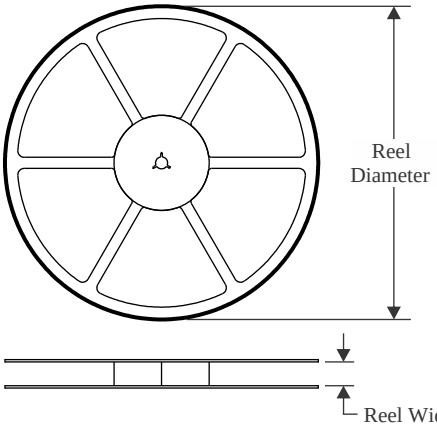

TAPE DIMENSIONS

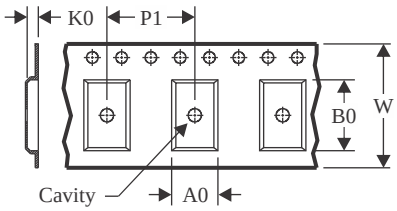

A0	Dimension designed to accommodate the component width
B0	Dimension designed to accommodate the component length
K0	Dimension designed to accommodate the component thickness
W	Overall width of the carrier tape
P1	Pitch between successive cavity centers

QUADRANT ASSIGNMENTS FOR PIN 1 ORIENTATION IN TAPE

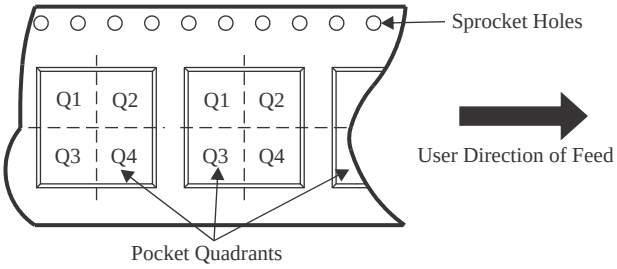

*All dimensions are nominal

Device	Package Type	Package Drawing	Pins	SPQ	Reel Diameter (mm)	Reel Width W1 (mm)	A0 (mm)	B0 (mm)	K0 (mm)	P1 (mm)	W (mm)	Pin1 Quadrant
LMK60E0-156M25SIAR	QFM	SIA	6	2500	330.0	16.4	5.5	7.5	1.5	8.0	16.0	Q1
LMK60E0-156M25SIAT	QFM	SIA	6	250	178.0	16.4	5.5	7.5	1.5	8.0	16.0	Q1
LMK60E0-212M50SIAR	QFM	SIA	6	2500	330.0	16.4	5.5	7.5	1.5	8.0	16.0	Q1
LMK60E0-212M50SIAT	QFM	SIA	6	250	178.0	16.4	5.5	7.5	1.5	8.0	16.0	Q1
LMK60E2-100M00SIAR	QFM	SIA	6	2500	330.0	16.4	5.5	7.5	1.5	8.0	16.0	Q1
LMK60E2-100M00SIAT	QFM	SIA	6	250	178.0	16.4	5.5	7.5	1.5	8.0	16.0	Q1
LMK60E2-125M00SIAR	QFM	SIA	6	2500	330.0	16.4	5.5	7.5	1.5	8.0	16.0	Q1
LMK60E2-125M00SIAT	QFM	SIA	6	250	178.0	16.4	5.5	7.5	1.5	8.0	16.0	Q1
LMK60E2-156M25SIAR	QFM	SIA	6	2500	330.0	16.4	5.5	7.5	1.5	8.0	16.0	Q1
LMK60E2-156M25SIAT	QFM	SIA	6	250	178.0	16.4	5.5	7.5	1.5	8.0	16.0	Q1
LMK60I2-100M00SIAR	QFM	SIA	6	2500	330.0	16.4	5.5	7.5	1.5	8.0	16.0	Q1
LMK60I2-100M00SIAT	QFM	SIA	6	250	178.0	16.4	5.5	7.5	1.5	8.0	16.0	Q1
LMK60I2-322M26SIAR	QFM	SIA	6	2500	330.0	16.4	5.5	7.5	1.5	8.0	16.0	Q1
LMK60I2-322M26SIAT	QFM	SIA	6	250	178.0	16.4	5.5	7.5	1.5	8.0	16.0	Q1

TAPE AND REEL BOX DIMENSIONS

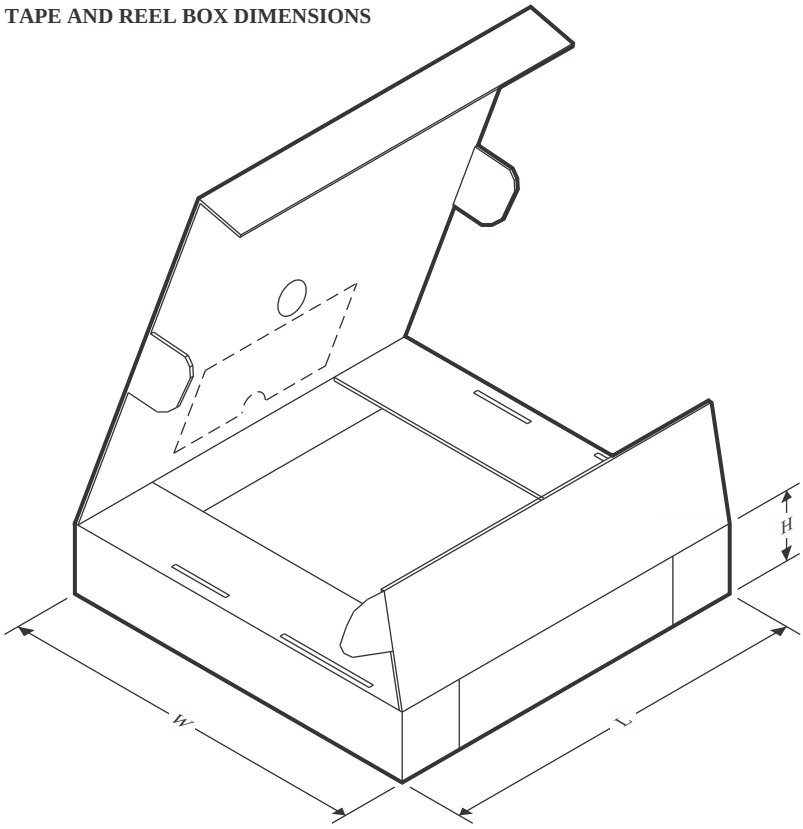

*All dimensions are nominal

Device	Package Type	Package Drawing	Pins	SPQ	Length (mm)	Width (mm)	Height (mm)
LMK60E0-156M25SIAR	QFM	SIA	6	2500	356.0	356.0	36.0
LMK60E0-156M25SIAT	QFM	SIA	6	250	213.0	191.0	55.0
LMK60E0-212M50SIAR	QFM	SIA	6	2500	356.0	356.0	36.0
LMK60E0-212M50SIAT	QFM	SIA	6	250	208.0	191.0	35.0
LMK60E2-100M00SIAR	QFM	SIA	6	2500	356.0	356.0	36.0
LMK60E2-100M00SIAT	QFM	SIA	6	250	208.0	191.0	35.0
LMK60E2-125M00SIAR	QFM	SIA	6	2500	356.0	356.0	36.0
LMK60E2-125M00SIAT	QFM	SIA	6	250	208.0	191.0	35.0
LMK60E2-156M25SIAR	QFM	SIA	6	2500	356.0	356.0	36.0
LMK60E2-156M25SIAT	QFM	SIA	6	250	208.0	191.0	35.0
LMK60I2-100M00SIAR	QFM	SIA	6	2500	356.0	356.0	36.0
LMK60I2-100M00SIAT	QFM	SIA	6	250	208.0	191.0	35.0
LMK60I2-322M26SIAR	QFM	SIA	6	2500	356.0	356.0	36.0
LMK60I2-322M26SIAT	QFM	SIA	6	250	208.0	191.0	35.0