TAPE AND REEL INFORMATION

REEL DIMENSIONS

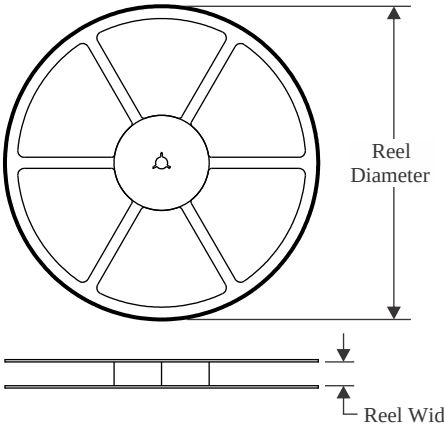

TAPE DIMENSIONS

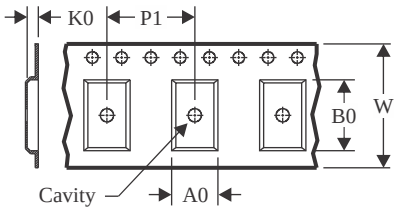

A0	Dimension designed to accommodate the component width
B0	Dimension designed to accommodate the component length
K0	Dimension designed to accommodate the component thickness
W	Overall width of the carrier tape
P1	Pitch between successive cavity centers

QUADRANT ASSIGNMENTS FOR PIN 1 ORIENTATION IN TAPE

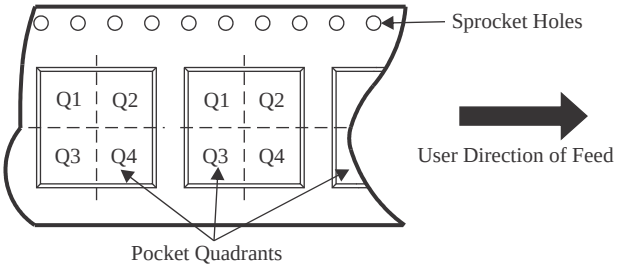

*All dimensions are nominal

Device	Package Type	Package Drawing	Pins	SPQ	Reel Diameter (mm)	Reel Width W1 (mm)	A0 (mm)	B0 (mm)	K0 (mm)	P1 (mm)	W (mm)	Pin1 Quadrant
LM5100AMRX/NOPB	SO PowerPAD	DDA	8	2500	330.0	12.4	6.5	5.4	2.0	8.0	12.0	Q1
LM5100AMX/NOPB	SOIC	D	8	2500	330.0	12.4	6.5	5.4	2.0	8.0	12.0	Q1
LM5100ASD/NOPB	WSON	DPR	10	1000	178.0	12.4	4.3	4.3	1.3	8.0	12.0	Q1
LM5100BMAX/NOPB	SOIC	D	8	2500	330.0	12.4	6.5	5.4	2.0	8.0	12.0	Q1
LM5100BSD/NOPB	WSON	DPR	10	1000	178.0	12.4	4.3	4.3	1.3	8.0	12.0	Q1
LM5100CMAX/NOPB	SOIC	D	8	2500	330.0	12.4	6.5	5.4	2.0	8.0	12.0	Q1
LM5101AMRX/NOPB	SO PowerPAD	DDA	8	2500	330.0	12.4	6.5	5.4	2.0	8.0	12.0	Q1
LM5101AMX/NOPB	SOIC	D	8	2500	330.0	12.4	6.5	5.4	2.0	8.0	12.0	Q1
LM5101ASD	WSON	DPR	10	1000	178.0	12.4	4.3	4.3	1.3	8.0	12.0	Q1
LM5101ASD-1/NOPB	WSON	NGT	8	1000	178.0	12.4	4.3	4.3	1.3	8.0	12.0	Q1
LM5101ASD-1/NOPB	WSON	NGT	8	1000	180.0	12.4	4.3	4.3	1.1	8.0	12.0	Q1
LM5101ASD/NOPB	WSON	DPR	10	1000	178.0	12.4	4.3	4.3	1.3	8.0	12.0	Q1
LM5101ASDX	WSON	DPR	10	4500	330.0	12.4	4.3	4.3	1.3	8.0	12.0	Q1
LM5101ASDX-1/NOPB	WSON	NGT	8	4500	330.0	12.4	4.3	4.3	1.3	8.0	12.0	Q1
LM5101ASDX/NOPB	WSON	DPR	10	4500	330.0	12.4	4.3	4.3	1.3	8.0	12.0	Q1

Device	Package Type	Package Drawing	Pins	SPQ	Reel Diameter (mm)	Reel Width W1 (mm)	A0 (mm)	B0 (mm)	K0 (mm)	P1 (mm)	W (mm)	Pin1 Quadrant
LM5101BMAX/NOPB	SOIC	D	8	2500	330.0	12.4	6.5	5.4	2.0	8.0	12.0	Q1
LM5101BSD/NOPB	WSON	DPR	10	1000	180.0	12.4	4.3	4.3	1.1	8.0	12.0	Q1
LM5101BSD/NOPB	WSON	DPR	10	1000	178.0	12.4	4.3	4.3	1.3	8.0	12.0	Q1
LM5101BSDX/NOPB	WSON	DPR	10	4500	330.0	12.4	4.3	4.3	1.3	8.0	12.0	Q1
LM5101CMAX/NOPB	SOIC	D	8	2500	330.0	12.4	6.5	5.4	2.0	8.0	12.0	Q1
LM5101CMY/NOPB	HVSSOP	DGN	8	1000	178.0	12.4	5.3	3.4	1.4	8.0	12.0	Q1
LM5101CMYE/NOPB	HVSSOP	DGN	8	250	178.0	12.4	5.3	3.4	1.4	8.0	12.0	Q1
LM5101CMYX/NOPB	HVSSOP	DGN	8	3500	330.0	12.4	5.3	3.4	1.4	8.0	12.0	Q1
LM5101CSD/NOPB	WSON	DPR	10	1000	178.0	12.4	4.3	4.3	1.3	8.0	12.0	Q1

TAPE AND REEL BOX DIMENSIONS

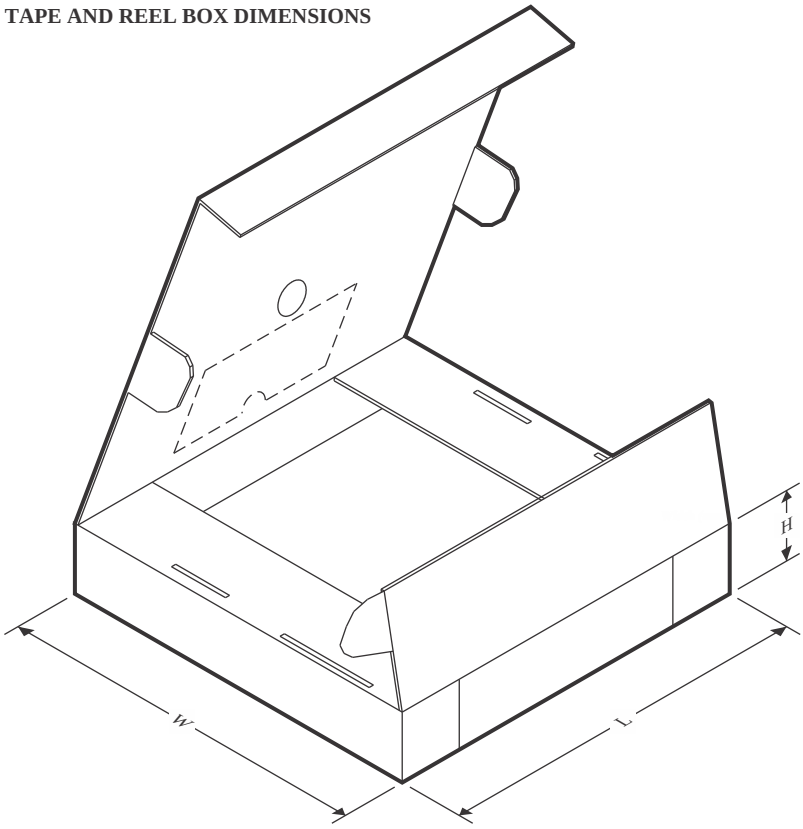

*All dimensions are nominal

Device	Package Type	Package Drawing	Pins	SPQ	Length (mm)	Width (mm)	Height (mm)
LM5100AMRX/NOPB	SO PowerPAD	DDA	8	2500	356.0	356.0	36.0
LM5100AMX/NOPB	SOIC	D	8	2500	367.0	367.0	35.0
LM5100ASD/NOPB	WSON	DPR	10	1000	208.0	191.0	35.0
LM5100BMAX/NOPB	SOIC	D	8	2500	367.0	367.0	35.0
LM5100BSD/NOPB	WSON	DPR	10	1000	208.0	191.0	35.0
LM5100CMAX/NOPB	SOIC	D	8	2500	367.0	367.0	35.0
LM5101AMRX/NOPB	SO PowerPAD	DDA	8	2500	356.0	356.0	36.0
LM5101AMX/NOPB	SOIC	D	8	2500	367.0	367.0	35.0
LM5101ASD	WSON	DPR	10	1000	208.0	191.0	35.0
LM5101ASD-1/NOPB	WSON	NGT	8	1000	208.0	191.0	35.0
LM5101ASD-1/NOPB	WSON	NGT	8	1000	200.0	183.0	25.0
LM5101ASD/NOPB	WSON	DPR	10	1000	208.0	191.0	35.0
LM5101ASDX	WSON	DPR	10	4500	367.0	367.0	35.0
LM5101ASDX-1/NOPB	WSON	NGT	8	4500	367.0	367.0	35.0
LM5101ASDX/NOPB	WSON	DPR	10	4500	367.0	367.0	35.0
LM5101BMAX/NOPB	SOIC	D	8	2500	367.0	367.0	35.0
LM5101BSD/NOPB	WSON	DPR	10	1000	200.0	183.0	25.0
LM5101BSD/NOPB	WSON	DPR	10	1000	208.0	191.0	35.0

Device	Package Type	Package Drawing	Pins	SPQ	Length (mm)	Width (mm)	Height (mm)
LM5101BSDX/NOPB	WSON	DPR	10	4500	367.0	367.0	35.0
LM5101CMAX/NOPB	SOIC	D	8	2500	367.0	367.0	35.0
LM5101CMY/NOPB	HVSSOP	DGN	8	1000	208.0	191.0	35.0
LM5101CMYE/NOPB	HVSSOP	DGN	8	250	208.0	191.0	35.0
LM5101CMYX/NOPB	HVSSOP	DGN	8	3500	367.0	367.0	35.0
LM5101CSD/NOPB	WSON	DPR	10	1000	208.0	191.0	35.0

TUBE

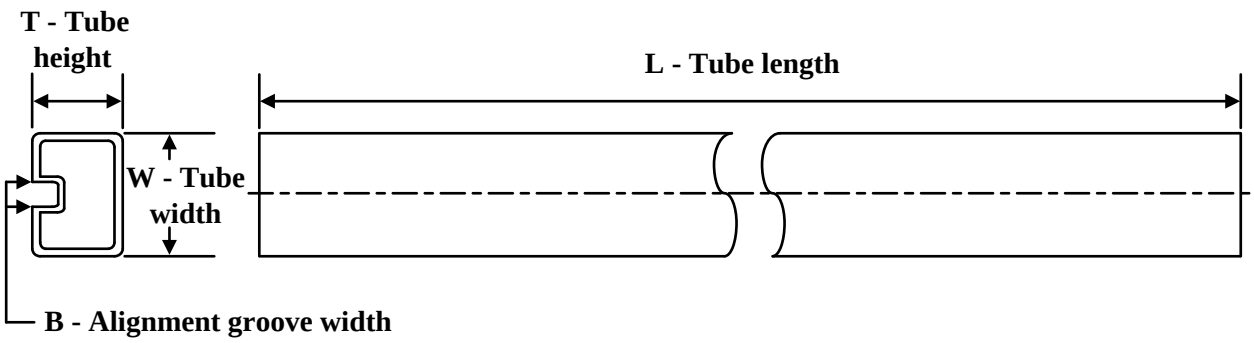

*All dimensions are nominal

Device	Package Name	Package Type	Pins	SPQ	L (mm)	W (mm)	T (µm)	B (mm)
LM5100AM/NOPB	D	SOIC	8	95	495	8	4064	3.05
LM5100AMR/NOPB	DDA	HSOIC	8	95	495	8	4064	3.05
LM5100BMA/NOPB	D	SOIC	8	95	495	8	4064	3.05
LM5101AM/NOPB	D	SOIC	8	95	495	8	4064	3.05
LM5101AM/NOPB	D	SOIC	8	95	495	8	4064	3.05
LM5101AMR/NOPB	DDA	HSOIC	8	95	495	8	4064	3.05
LM5101BMA/NOPB	D	SOIC	8	95	495	8	4064	3.05
LM5101CMA/NOPB	D	SOIC	8	95	495	8	4064	3.05