TAPE AND REEL INFORMATION

REEL DIMENSIONS

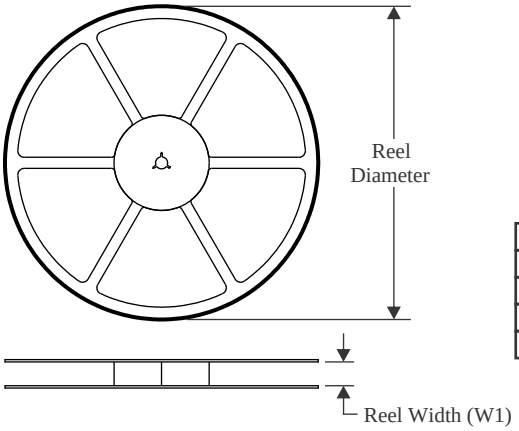

TAPE DIMENSIONS

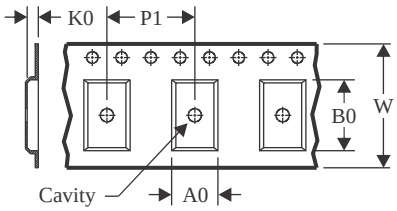

A0	Dimension designed to accommodate the component width
B0	Dimension designed to accommodate the component length
K0	Dimension designed to accommodate the component thickness
W	Overall width of the carrier tape
P1	Pitch between successive cavity centers

QUADRANT ASSIGNMENTS FOR PIN 1 ORIENTATION IN TAPE

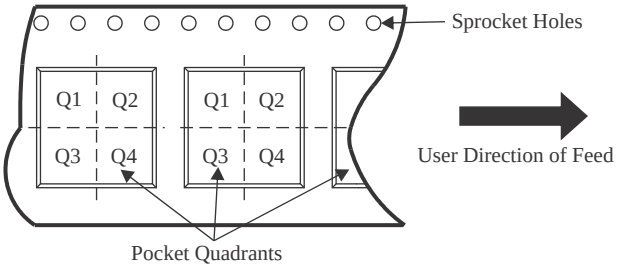

*All dimensions are nominal

Device	Package Type	Package Drawing	Pins	SPQ	Reel Diameter (mm)	Reel Width W1 (mm)	A0 (mm)	B0 (mm)	K0 (mm)	P1 (mm)	W (mm)	Pin1 Quadrant
LDC1612DNTR	WSON	DNT	12	4500	330.0	12.4	4.25	4.25	1.15	8.0	12.0	Q1
LDC1612DNTR	WSON	DNT	12	4500	330.0	12.4	4.3	4.3	1.3	8.0	12.0	Q1
LDC1614RGHR	WQFN	RGH	16	4500	330.0	12.4	4.3	4.3	1.3	8.0	12.0	Q1

TAPE AND REEL BOX DIMENSIONS

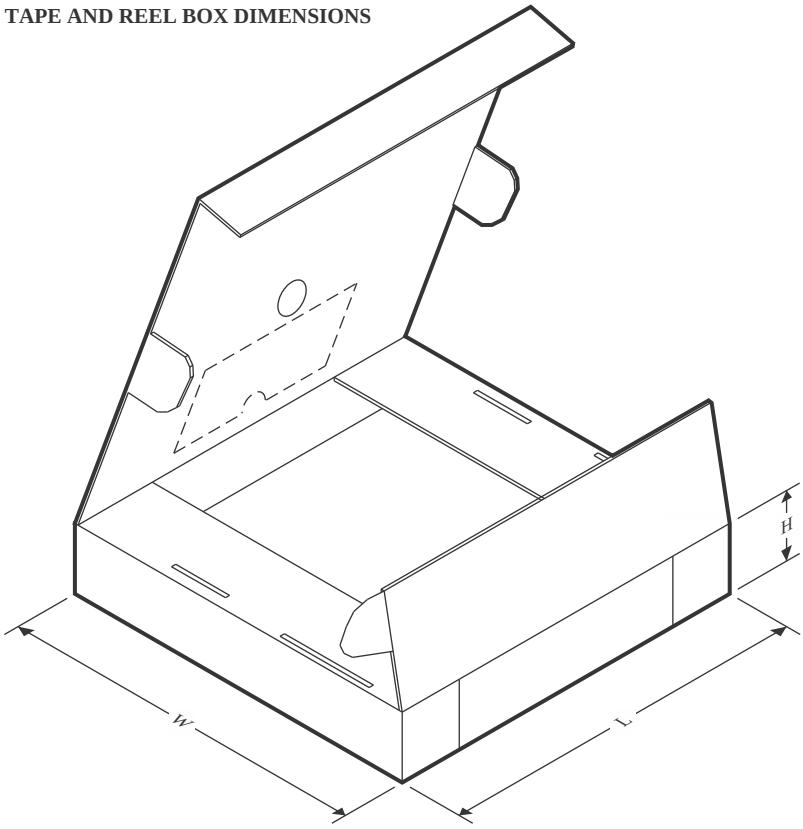

*All dimensions are nominal

Device	Package Type	Package Drawing	Pins	SPQ	Length (mm)	Width (mm)	Height (mm)
LDC1612DNTR	WSON	DNT	12	4500	367.0	367.0	35.0
LDC1612DNTR	WSON	DNT	12	4500	367.0	367.0	35.0
LDC1614RGHR	WQFN	RGH	16	4500	367.0	367.0	35.0